STATE OF NEW YORK
OFFICE OF GENERAL SERVICES
DESIGN AND CONSTRUCTION GROUP
THE GOVERNOR NELSON A. ROCKEFELLER
EMPIRE STATE PLAZA
ALBANY, NY 12242

ADDENDUM NO. 2 TO PROJECT NO. 42535

CONSTRUCTION WORK, HVAC WORK, ELECTRICAL WORK

PROVIDE ELECTRIC UPGRADE FOR FEEDERS, TRANSFORMERS, AND SWITCHGEAR SITEWIDE

GREENHAVEN CORRECTIONAL FACILITY
ROUTE 216
STORMVILLE, N.Y. 12582

February 21, 2013

NOTE: This Addendum forms a part of the Contract Documents. Insert it in the Project Manual. Acknowledge receipt of this Addendum in the space provided on the Bid Form.

CONSTRUCTION WORK SPECIFICATION GROUP

1. No Changes.

HVAC WORK SPECIFICATION GROUP

1. No Changes.

ELECTRICAL WORK SPECIFICATION GROUP

1. SECTION 232000 – HVAC PIPING: Add Table A1 to the specification section.

2. SECTION 231220 – PACKAGED FUEL OIL PUMPING SYSTEMS: Add the following to Paragraph 2.03:
   "E. Backpressure Control Valve (BPCV-13011)
      1. Provide remotely mounted backpressure control valve meeting requirements specified by the attached ISA data sheet. Valve shall be mounted in the field near DT-01 per Drawing EM5.02."

3. SECTION 231323 – FACILITY ABOVE GROUND FUEL-OIL STORAGE TANKS: Revise paragraph 2.04 - FUEL UNLOADING STATION accordingly:
   "A. Provide one Compact Fuel Port. The fuel port shall be designed to fill one aboveground fuel oil storage tank. The system shall be supplied as a factory packaged and engineered system. Shop fabricated systems are not acceptable.
   B. Fuel Port Box
      1. The Fuel Port shall be of a compact design to accommodate the site constraints. The box shall be constructed of steel and shall be epoxy coated for durability. Box shall be painted white (manufacturers standard).

2. Provide a 4 inch quick connect fitting for truck connection and provide a 4 inch pipe. Include a 4 inch manually operated ball valve just beyond the quick connection for shut-off while a filling operation is not being performed.
3. The box shall be lockable. Provide 4 sets of keys. Deliver keys to The Directors Representative.
4. Fuel Oil Spill Containment Capacity: 7 Gallons. Provide hand pump inside of spill containment area. Pump shall be capable of pumping spilled liquid from box to the fill pipe for delivery to the selected tank."

4. SECTION 232420 – INTERNAL-COMBUSTION ENGINE AIR-STARTING SYSTEMS: Add Specification Section to the contract.

5. SECTION 260513 – PRIMARY WIRING – 15KV NOMINAL:
   a. Paragraph 1.01: Add "H. ICEA S-94-649: Standard for Concentric Neutral Cables Rated 5 Through 46kV."
   b. Paragraph 2.01(A): Revise to: "Cable Configuration: Single Conductors with Concentric Neutral."
   c. Paragraph 2.01(C): Add "e. Full concentric neutral."
   d. 2.01(C)(5) Add "5. ICEA S-94-649: Standard for Concentric Neutral Cables Rated 5 Through 46kV.

6. SECTION 261219 – TRANSFORMERS – PAD MOUNTED:
   a. Paragraph 2.01(A)(6): Revise to "Dead front construction."
   b. Paragraph 2.02(A)(7): Revise to "Dead front construction."
   c. Paragraph 2.03(A)(6): Revise to "Dead front construction."

7. SECTION 261320 - HIGH VOLTAGE SWITCH AND FUSE ASSEMBLY - PAD MOUNTED:
   a. Paragraph 2.02: Add "14. Dead front construction."
   b. Paragraph 2.03: Add "17. Dead front construction."

8. SECTION 263215 – DIESEL ALTERNATOR EMERGENCY SYSTEM: Add the following to Paragraph 2.06 – FUEL SUPPLY SYSTEM:
   a. Paragraph 2.07 (I)(b): Provide temperature compensated, two-line LCD, net fuel consumption flow computer for each diesel engine. Flow computer shall be capable of receiving instantaneous fuel flow signals from two flow meters simultaneously. The flow computer shall totalize net fuel rate. Instantaneous and Totalized net fuel rate shall be available on the flow computer front panel at any time for operator monitoring. Flow computer shall include Volume, Corrected Volume, or Mass Equations, Universal Viscosity Curve (UVC), Strouhal/ Roshko Advanced Linearization Methods, and API 2540 Equations for Petroleum Fluids. User entry of fluid properties shall also be permitted by the meter interface. Provide the following control capabilities: Flow Alarm High (Set in Field), Flow Alarm Low (Set in Field), 4-20mA and isolated pulse flow rate transmission outputs, and RS-485 serial connection. Provide field mount enclosure to house flow computer and to mount to nearest column. Acceptable Manufacturers: Kessler Ellis Products, ST1-NET-FC (Basis of Design); Flow Technology Series, Tempe, AZ; Omni Flow Computers, Inc., Sugar Land, TX

9. SECTION 444249 – OIL-WATER SEPARATOR: Paragraph 2.03A, replace "double wall" with "single wall".

CONSTRUCTION DRAWINGS

1. Drawing A-310:
   a. REVISE Window Schedule, Window No. W-2, Material to be Hollow Metal Painted.

b. REVISE Glass type for windows W-1, W-3, W-4, W-5 & W-6 to be Glass Type 'A' Glass.

c. REVISE Glass type for windows W-2 to Type 'M' Glass.

HVAC WORK DRAWINGS

1. Drawing M1.12:
   a. Change Match line callout to read "MATCH LINE (NO CONTINUATION)."
   b. Existing abandoned generator removal scope was modified. See accompanying Sketch SK-M1.12-1.

2. Drawing M1.13:
   a. Existing abandoned generator exhaust pipe and silencer removal scope was modified. See accompanying Sketch SK-M1.13-1.

3. Drawing M2.12:
   a. Change the callout on the oil/water separator located in drawing Quadrant D-5 from "EX OIL WATER SEPARATOR" to "OIL WATER SEPARATOR." Refer to Section
   b. Change Match line callout to read "MATCH LINE (NO CONTINUATION)."

4. Drawing M2.13:
   a. Change Match line callout to read "MATCH LINE (NO CONTINUATION)."

5. Drawing M1.22:
   a. Change Match line callout to read "MATCH LINE (NO CONTINUATION)."

ELECTRICAL WORK DRAWINGS

1. Drawing EC0.00B:
   a. ADD General Note 16, "ANY TREE REMOVAL WORK SHALL BE DONE BETWEEN OCTOBER 1ST AND MARCH 31ST."
   b. ADD General Note 17, "EXISTING ELECTRICAL MANHOLES ARE 9'Lx5'Wx6'H (INSIDE DIMENSIONS). CONTRACTOR SHALL REFER TO EC SERIES DRAWINGS FOR MANHOLE LOCATIONS AND EU SERIES DRAWINGS FOR MANHOLE CONFIGURATIONS."

2. Drawing EC1.07:
   a. Revise the "DEMOLITION PLAN – AREA 7". See accompanying sketch SK-EC1.07-1.

3. Drawing EC2.01
   a. Revise Guard Tower Number 2 secondary ductbank callout to read "4-WAY (2x2) 4" ELEC. DB.".

4. Drawing EC2.06:
   a. Revise the "UTILITY SITE PLAN – AREA 6". See accompanying sketch SK-EC2.06-1.
   b. Revise Building No. 22 – Gymnasium ductbank callout to read "6-WAY (3X2) 4" ELEC. DB."

5. Drawing EC2.07:
   a. Revise the "UTILITY SITE PLAN – AREA 7". See accompanying sketch SK-EC2.07-1

6. Drawing EC2.15:
   a. Revise the "RESTORATION PLAN – AREA 2". See accompanying sketch

SK-EC2.15-1.

7. Drawing EC2.20:
   a. Revise the "RESTORATION PLAN – AREA 7". See accompanying sketch SK-EC2.20-1.

8. Drawing EC3.05:
   a. Revise Profile E-26 title to: "6-WAY (3X2) 4" ELEC. DB. FROM T-22 TO BUILDING NO. 22"

9. Drawing EU2.24
   a. Revise Section G4 left feeder number to "5/6" and right feeder number to "Spare Conduit".

10. Drawing EU2.25
    a. Revise Section U5 to match Section F4 on drawing EU2.24.

11. Drawing EP1.12B
    a. Revise "(4) 3" RGS CONDUIT [PH1]" to "(4) 3-1/2" RGS CONDUIT [PH1]".

12. Drawing EP1.22B
    a. Revise the "ENGINE ROOM – LOWER LEVEL PLAN – ELEV. 422.5' – NEW WORK – PHASE 2". See accompanying drawing EP1.22B.

13. Drawing EP2.08A:
    a. Revise Drawing Note No. 2 to: "Existing Main Distribution Panelboard 240V, 225A, 3□, 4W to be removed. Extend all existing branch circuits to new panelboard PP-10 location shown on drawing EP2.08B."

14. Drawing EP2.10B:
    a. Revise "GREEN HAVEN C.F. – VOCATIONAL SCHOOL BUILDING No. 12 – NEW WORK". See accompanying sketch SK-EP2.10B-1.

15. Drawing EP2.21B:
    a. Revise "GREEN HAVEN C.F. – GUARD TOWER No. 5 – NEW WORK". See accompanying sketch SK-EP2.21.B-1.

16. Drawing E4.01:
    a. Revise General Note No. 1 to: "1. All medium voltage feeder cabling contains lead shielding and shall be removed per the requirements outlined in the contract documents. Refer to 42535-C contract for lead casing and insulation removals.".

17. Drawing E6.01:
    a. Revise "TRANSFORMER SCHEDULE". See accompanying drawing E6.01.

18. Drawing E6.06:
    a. Revise "PANELBOARD SCHEDULES". See accompanying drawing E6.06.

19. Drawing E6.07:
    a. Revise Circuit No. 3 "Wiring" in Switchboard Schedule SB-24 to: 3 sets of 4 – 500kcmil Wire with #4/0 Ground in 3-1/2" RMC conduit.

20. Drawing EL1.11B:

a. Revise "ENGINE ROOM – BASEMENT LIGHTING – ELEV. 411.5' – NEW WORK – PHASE 1". See accompanying drawing EL.1.11B.

21. Drawing EL1.14B:
    a. Revise "ENGINE ROOM – LOWER LEVEL LIGHTING – ELEV. 422.5 – NEW WORK – PHASE 1". See accompanying drawing EL1.14B.

22. Drawing EL1.32B:
    a. Revise "ENGINE ROOM – UPPER LEVEL LIGHTING – ELEV. 437.0' – NEW WORK – PHASE 3". See accompanying drawing EL1.32B.

23. Drawing EM1.12:
    a. Existing abandoned generator removal scope was modified. See accompanying Sketch SK-EM1.12-1.

24. Drawing EM1.13:
    a. Existing abandoned generator exhaust pipe and silencer removal scope was modified. See accompanying Sketch SK-EM1.13-1.

25. Drawing EM2.15:
    a. Drawing Note 2 – Delete the first sentence. Replace "COORDINATE WITH THE 'C' CONTRACT" with "REFER TO DRAWING EC4.02 FOR CONSTRUCTION DETAILS OF THE FUEL OIL UNLOADING STATION."

26. Drawing EM2.22:
    a. Two, 4", emergency vents were added to each day tank. One vent serves the main storage and the second vent serves the interstitial space. These vents are required for UL142 and NFPA 30 compliance. The vents are routed up through the roof and capped with an approved pressure vent cap. See accompanying Sketch SK-EM2.22-1.

27. Drawing EM6.03:
    a. Detail 10, Note 6 – Change "Section 232003 – METERS AND GAGES FOR MECHANICAL (FUEL OIL) PIPING" to read "SECTION 263215 – DIESEL ALTERNATOR EMERGENCY SYSTEM."

END OF ADDENDUM

James Dirolf, P.E.
Director of Design

SPECIFICATION SECTION 23 21 05 - TABLE A1

PIPING MATERAL SPECIFICATIONS

SYSTEM	DESIG.	CONDITIONS OPER.	CONDITIONS DESIGN	PIPE SIZE	MATERIAL	JOINTS	FLANGES [1,2]	FITTINGS [1]	UNIONS	BOLTING MATERIALS
STEAM, LOW PRESSURE	LPS	5 PSIG/ 227 DEG F	35 PSIG/ 281 DEG F	2 INCH AND SMALLER	SCHEDULE XSTG, SEAMLESS PER ASTM A106 GRADE B	SOCKET-WELD	ANSI CL 150 WELD NECK, R.F. PER ASME 16.5. MATERIAL SHALL BE ASTM A 105	ANSI CL 3000 FORGED STEEL SOCKET WELDED IN ACCORDANCE WITH ASME B16.11. ASTM A105.	ANSI 3000 SW, ASME B16.11, ASTM A105. STL/STL SEAT	BOLTS:ASTM A193 GR B7; NUTS:A914, GR 2H
CONDENSATE, LOW PRESSURE	LPR	5 PSIG/ 227 DEG F	35 PSIG/ 281 DEG F	2 INCH AND SMALLER	SCHEDULE XSTG, SEAMLESS PER ASTM A106 GRADE B	SOCKET-WELD	ANSI CL 150 WELD NECK, R.F. PER ASME 16.5. MATERIAL SHALL BE ASTM A 105	ANSI CL 3000 FORGED STEEL SOCKET WELDED IN ACCORDANCE WITH ASME B16.11. ASTM A105.	ANSI 3000 SW, ASME B16.11, ASTM A105. STL/STL SEAT	BOLTS:ASTM A193 GR B7; NUTS:A914, GR 2H
FUEL OIL, DISTILLATE (NO. 2)	FOS & FOR	50 PSIG/ 60 DEG F	100 PSIG/ 140 DEG F	2 INCH AND SMALLER	SCHEDULE XSTG, SEAMLESS PER ASTM A106 GRADE B	SOCKET-WELD	ANSI CL 150 WELD NECK, R.F. PER ASME 16.5. MATERIAL SHALL BE ASTM A 105	ANSI CL 3000 FORGED STEEL SOCKET WELDED IN ACCORDANCE WITH ASME B16.11. ASTM A105.	ANSI 3000 SW, ASME B16.11, ASTM A105. STL/STL SEAT	BOLTS:ASTM A193 GR B7; NUTS:A914, GR 2H
				2-1/2 INCH THRU 12 INCH	SCHEDULE STANDARD, SEAMLESS PER ASTM A53 GRADE B	BUTT WELD	ANSI CL 150 WELD NECK, R.F. PER ASME 16.5. MATERIAL SHALL BE ASTM A 105	SCHEDULE STANDARD BUTT WELD PER ASME B16.9, MATERIAL SHALL BE ASTM A 234, GR WPB	UNIONS SHALL BE MADE WITH FLANGES	BOLTS:ASTM A193 GR B7; NUTS:A914, GR 2H
FUEL OIL [TEMPORARY], DISTILLATE (NO. 2)	FOS(T) & FOR(T)	50 PSIG/ 60 DEG F	75 PSIG/ 140 DEG F	2-1/2 INCH AND SMALLER	SCHEDULE XSTG, ERW PER ASTM A106 GRADE B	THREADED	WHEN REQUIRED, ANSI CL 150 WELD NECK, R.F. PER ASME 16.5. MATERIAL SHALL BE ASTM A 105	THREADED CL 150 MALLEABLE IRON IN ACCORDANCE WITH ASME B16.3. ASTM A197. THREADS TO ASTM B1.20.1.	CL 150 MALLEABLE IRON, BRASS SEAT, ASTM A197	BOLTS:ASTM A193 GR B7; NUTS:A307, GR B
FUEL OIL SUCTION, DISTILLATE (NO. 2)	FOSUCT	50 PSIG/ 60 DEG F	100 PSIG/ 140 DEG F	2 INCH AND SMALLER	SCHEDULE XSTG, SEAMLESS PER ASTM A106 GRADE B	SOCKET-WELD	ANSI CL 150 WELD NECK, R.F. PER ASME 16.5. MATERIAL SHALL BE ASTM A 105	ANSI CL 3000 FORGED STEEL SOCKET WELDED IN ACCORDANCE WITH ASME B16.11. ASTM A105.	ANSI 3000 SW, ASME B16.11, ASTM A105. STL/STL SEAT	BOLTS:ASTM A193 GR B7; NUTS:A914, GR 2H
				2-1/2 INCH THRU 12 INCH	SCHEDULE STANDARD, SEAMLESS PER ASTM A53 GRADE B	BUTT WELD	ANSI CL 150 WELD NECK, R.F. PER ASME 16.5. MATERIAL SHALL BE ASTM A 105	SCHEDULE STANDARD BUTT WELD PER ASME B16.9, MATERIAL SHALL BE ASTM A 234, GR WPB	UNIONS SHALL BE MADE WITH FLANGES	BOLTS:ASTM A193 GR B7; NUTS:A914, GR 2H
WATER, JACKET WATER	JWS & JWR	40 PSIG/ 220 DEG F	150 PSIG/ 300 DEG F	2 INCH AND SMALLER	SCHEDULE XSTG, SEAMLESS PER ASTM A106 GRADE B	SOCKET-WELD	ANSI CL 150 WELD NECK, R.F. PER ASME 16.5. MATERIAL SHALL BE ASTM A 105	ANSI CL 3000 FORGED STEEL SOCKET WELDED IN ACCORDANCE WITH ASME B16.11. ASTM A105.	ANSI 3000 SW, ASME B16.11, ASTM A105. STL/STL SEAT	BOLTS:ASTM A193 GR B7; NUTS:A914, GR 2H
				2-1/2 INCH THRU 12 INCH	SCHEDULE STANDARD, SEAMLESS PER ASTM A53 GRADE B	BUTT WELD	ANSI CL 150 WELD NECK, R.F. PER ASME 16.5. MATERIAL SHALL BE ASTM A 105	SCHEDULE STANDARD BUTT WELD PER ASME B16.9, MATERIAL SHALL BE ASTM A 234, GR WPB	UNIONS SHALL BE MADE WITH FLANGES	BOLTS:ASTM A193 GR B7; NUTS:A914, GR 2H

SPECIFICATION SECTION 23 21 05 - TABLE A1

PIPING MATERAL SPECIFICATIONS

SYSTEM	DESIG.	CONDITIONS OPER.	CONDITIONS DESIGN	PIPE SIZE	MATERIAL	JOINTS	FLANGES [1,2]	FITTINGS [1]	UNIONS	BOLTING MATERIALS
WATER, AFTER COOLER	ACS & ACR	32 PSIG/ 170 DEG F	100 PSIG/ 140 DEG F	2 INCH AND SMALLER	SCHEDULE XSTG, SEAMLESS PER ASTM A106 GRADE B	SOCKET-WELD	ANSI CL 150 WELD NECK, R.F. PER ASME 16.5. MATERIAL SHALL BE ASTM A 105	ANSI CL 3000 FORGED STEEL SOCKET WELDED IN ACCORDANCE WITH ASME B16.11. ASTM A105.	ANSI 3000 SW, ASME B16.11, ASTM A105. STL/STL SEAT	BOLTS:ASTM A193 GR B7; NUTS:A914, GR 2H
				2-1/2 INCH THRU 12 INCH	SCHEDULE STANDARD, SEAMLESS PER ASTM A53 GRADE B	BUTT WELD	ANSI CL 150 WELD NECK, R.F. PER ASME 16.5. MATERIAL SHALL BE ASTM A 105	SCHEDULE STANDARD BUTT WELD PER ASME B16.9, MATERIAL SHALL BE ASTM A 234, GR WPB	UNIONS SHALL BE MADE WITH FLANGES	BOLTS:ASTM A193 GR B7; NUTS:A914, GR 2H
WATER, NON-POTABLE	NPW, CW	60 PSIG/ 60 DEG F	100 PSIG/ 100 DEG F	2-1/2 INCH AND SMALLER	SEAMLESS COPPER CONFORMING TO ASTM B88, TYPE L	SOLDERED PER ASTM B62 OR B124	USE UNIONS	WROUGHT COPPER OR BRONZE, SOLDER JOINT, ASTM B61 OR B124, DIMENSIONS PER ANSI B16.22	CAST COPPER, SOLDER JT. ASTM B62/B124, ANSI B16.18	--
AIR, COMPRESSED	CA	175 PSIG/ 250°F	200 PSIG/ 300°F	2 INCH AND SMALLER	TYPE L DRAWN COPPER PER ASTM B-88	SOLDERED WITH ASTM B32 95-5 TIN ANTIMONY	--	WROUGHT COPPER IN ACCORDANCE WITH ANSI 16.22, ANSI/ASME B1.20.1	WROUGHT COPPER IN ACCORD. WITH ASME 16.22	--
				2-1/2 INCH THROUGH 12 INCH	SCH 40, ERW, ASTM A53 GR B, TYPE S	BUTT WELD	ANSI CL 150 WELD NECK, F.F. OR R.F. PER ASME 16.5. MATERIAL SHALL BE ASTM A 105	SAME THICKNESS AS ATTACHED PIPE, BUTTWELD TO ASME B 16.9. MATERIAL PER ASTM A 234, GR WPB	UNIONS SHALL BE MADE WITH FLANGES	BOLT - MILD STEEL NUT - ASTM A 307, GR B
EXHAUST, DIESEL ENGINE	EXH	2 PSIG/ 900°F	50 PSIG/ 1000°F	2 INCH AND SMALLER	SCHEDULE STANDARD, SEAMLESS PER ASTM A106 GRADE B	BUTT WELD	ANSI CL 150 WELD NECK, R.F. PER ASME 16.5. MATERIAL SHALL BE ASTM A 105	SCHEDULE STANDARD BUTT WELD PER ASME B16.9, MATERIAL SHALL BE ASTM A 234, GR WPB	UNIONS SHALL BE MADE WITH FLANGES	BOLTS:ASTM A193 GR B7; NUTS:A914, GR 2H
				2-1/2 INCH THROUGH 16 INCH	ASTM A312 GR TP304 STAINLESS STEEL, SCHEDULE 10S, SEAMLESS	BUTT WELD	ANSI CL 150 WELD NECK, R.F. PER ASME 16.5. MATERIAL SHALL BE ASTM A182M	ANSI CL 150 WELD NECK, R.F. PER ASME 16.5. MATERIAL SHALL BE ASTM A 403M	UNIONS SHALL BE MADE WITH FLANGES	BOLTS:ASTM A193 GR B8; NUTS:A194, GR 8
EQUIPMENT VENTS	V			PIPING MATERIALS SHALL MATCH SYSTEM BEING VENTED						
EQUIPMENT DRAINS	ED			PIPING MATERIALS SHALL MATCH SYSTEM BEING DRAINED						

NOTES:

1. INSIDE DIAMETER OF FLANGE/FITTING SHALL MATCH MATING PIPE INSIDE DIAMETER.
2. MACHINE TO FLAT FACE IF MATING FLANGE IS FLAT FACE.

FILE: H:\PROJ\111109A0\SPEC\E CONTRACT\232000_E_HVACPIPING_TABLES.XLSX

SECTION 232420

INTERNAL-COMBUSTION ENGINE AIR-STARTING SYSTEMS

PART 1 - **GENERAL**

1.01 **RELATED WORK SPECIFIED ELSEWHERE**

A. Drawings and general provisions of the Contract, including General, Special, and Supplementary Special Conditions, other Division 01 Specification Sections, and Contract Addendums apply to this Section.

B. Diesel Alternator Power Systems: Section 233215

C. Common Work Results for HVAC: Section 230500

D. HVAC Piping: Section 232105

1.02 **SUMMARY**

A. This Section includes the following:
1. Electric-Motor Driven Reciprocating Air-Compressors
2. Compressed Air Receivers
3. Intercoolers and Aftercoolers
4. Air-Start System Controllers
5. Air-Start System Accessories

1.03 **SUBMITTALS**

A. Product Data: In accordance with Section 013300 – Submittal Procedures, submit the following:
1. Grout product data.

B. Project Record Documents: In accordance with Section 010001 – General Requirements, submit the following:
1. Red line drawings.

1.04 **CODE CONFORMANCE**

A. Codes include but are not limited to the latest editions of the following:
1. ASME Power Piping Code B31.1.
2. International Building Code.
3. International Fire Code.
4. International Plumbing Code.
5. International Fuel Gas Code.
6. National Electrical Code (NEC)

7. New York State Codes
8. In addition, all applicable state and federal laws and regulations including but not limited to:
    a. New York State Executive Order No. 111
    b. Section 504 of the Federal Rehabilitation Act of 1973
    c. The Americans with disabilities Act (ADA)
    d. Section 8.812 Minimum energy Efficiency Standards (ASHRAE Standard 90)
    e. Applicable Life Safety Codes shall be incorporated herein by reference.

1.05 QUALITY ASSURANCE

A. Equipment and appurtenances shall be designed in conformity with ANSI, ASME, CEMA, IEEE, NEMA, OSHA, AGMA, ASTM, and other generally accepted applicable standards.

B. All machinery and equipment shall be safeguarded in accordance with the safety codes of the ANSI, CEMA, OSHA, and local industrial codes, including but not limited to, shaft guards on all rotating shafts, cages around exposed fan blades, etc.

C. All mechanical work shall be performed by mechanics who are qualified to do such work and who are normally engaged in this type of work.

1.06 SAFETY PRECAUTIONS

A. Rotating Equipment – Fully guard couplings, motor shafts, gears and other exposed rotating or rapidly moving parts in accordance with OSHA 29 CFR 1910.219. Provide rigid and suitably secured guard parts readily removable without disassembling guarded unit.

B. Welding and Brazing – Safety in welding, cutting, and brazing of pipe shall conform to AWS Z49.1.

PART 2 - **PRODUCTS**

2.01 GENERAL

A. The air-starting system shall be installed such that the existing air-compressors and air receiving tanks remain in service to the existing diesel generators. The contractor shall phase the installation so that each existing compressor and tank is replaced one-for-one.

B. The final installed air-starting system shall consist of two new compressors, two new compressed air receivers, associated intercoolers and aftercoolers, filters, dryer, and accessories, and a single control panel which monitors and controls the air-compressors to maintain operability, reliability, and air service to the diesel generator air starters at the performance specified.

C. A skid mounted system is not practical due to the phased installation requirements. The contractor shall treat the components specified herein as a complete system and shall take responsibility for the overall compatibility and operability of the system.

2.02 AIR COMPRESSORS, RECIPROCATING

A. Provide two air compressors. The air-compressors shall be identical in model and design and from the same manufacturer.

B. Provide air compressors of the standard piston type, multi-cylinder, multi-stage, air-cooled, reciprocating, belt-driven, base-mounted type, rated for continuous duty at the capacities and characteristics specified.

C. Capacities and Characteristics:

1. Rated Capacity: 40 SCFM.
2. Maximum Supply Pressure: 175 PSIG

D. Mount compressor, motor, controls, and instruments on a welded steel base plate. Provide means to adjust V-belt tension. Provide splash lubricated compressor not to exceed 105 rad/sec (1000 rpm), or pressure lubricated compressor not to exceed 188 rad/sec (1800 rpm).

E. Crankshaft and connecting rods shall be steel.

F. Frame (crankcase), cylinders, and cylinder heads shall be close grain cast iron. Fully enclose frame. Provide automatic unloaders to permit the compressor to start unloaded.

G. Driver – Electric Motor

1. Provide three phase, 208 volt, 60 hertz, squirrel cage induction motor not exceeding 188 rad/sec (1800 rpm) with an open drip-proof enclosure. Conform to NEMA MG 1for motor and NEMA ICS 2 and NEMA ICS 6 for controls.

2.03 INTERCOOLERS AND AFTERCOOLERS

A. Provide intercoolers between all intermediate stages of multi-stage compressors and provide aftercoolers with compressors.

B. Intercoolers for air-cooled compressors shall be the tube-and-fin type.

C. Aftercoolers shall be of the water-cooled shell-and-tube type. Water-cooled aftercoolers shall be of sufficient capacity to cool the compressed air to within minus 9 degrees C (15 degrees F) of the temperature of the water entering the coolers. Provide water-cooled aftercoolers with sight-flow indicator to visually observe the flow of water to the cooler. The pressure drop of compressed air through the cooler shall not exceed 7 kPa(one psi). Provide aftercoolers with a moisture separator and drain trap to remove the condensed moisture and oil from the air leaving the cooler.

D. Shell-and-Tube – Floating-head type consisting of a removable and cleanable nest of corrosion-resistant tubes within a steel shell. Air may pass either through the tubes or the shell.

E. Tube-and-Fin – Copper, aluminum, copper-aluminum, or copper-alloy construction. Fins shall be securely bonded to the tubing. Provide tube-and-fin coolers with a fan for circulation of the cooling air. The fan shall be adequately guarded for safety and be driven either from the compressor crankshaft or by an independent electric motor.

2.04 CONTROLS

A. Start-and-Stop Control

1. When set for start-and-stop control, motor shall stop automatically when discharge pressure reaches maximum pressure setting and start automatically when discharge pressure falls to minimum setting. Cylinders shall unload during periods of motor shutdown.

B. Constant Speed Control

1. Compressor shall operate continuously at constant speed. Provide means to automatically load and unload compressor at preset minimum and maximum pressure settings, respectively. Provide means for automatic release of pressure within cylinders when the unit is operating without load. Also provide means for manual or automatic unloading of cylinders during starting of unit. Equip compressor with a timed control to stop compressor after a 10-minute unloaded period if air is not used.

C. Safety Controls

1. Provide safety controls to shutdown each compressor on high discharge air temperature or low oil pressure for pressure lubricated compressor and low oil level for splash lubricated compressor. Set high temperature shutdown at 54 degrees C(130 degrees F). Indicate each shutdown condition by a light on the compressor control panel.

2.05 AIR RECEIVERS

A. Provide two, 660 Gallon, steel compressed air receivers.

B. Build receiver (tank) of welded steel, in accordance with ASME BPVC SEC VIII D1, Unfired Pressure Vessels, for 300 psig working pressure at 400 degrees F, complete with pressure gage, ASME BPVC SEC VIII Div. 1 and ASME BPVC SEC IX code stamped safety valve, check valve, shut-off valve on tank outlet, and automatic tank drain on tank. Provide tank with steel supports and bolt to a concrete foundation.

2.06 ACCESSORIES

A. Compressed Air Filters

1. Provide high pressure compressed air filter, single cartridge type, designed for operating pressures not less than the system design pressure. Filter housing of Type 304L stainless steel construction. Provide a cellulose cartridge filter of

graded density construction capable of removing liquids and solids of 5 microns and larger. Provide filter with a bottom drain and timed solenoid drain.

B. Timed Solenoid Drain

1. Packaged solenoid drain with 1/4 inch, 3000 psig, direct acting, normally closed solenoid valve, solid state timer, drain cycle adjustable from zero to 50 minutes, valve open duration adjustable from one to 14 seconds, power on light, valve open light, operation on 115 VAC, and housed in NEMA 12 enclosure.

PART 3 - **EXECUTION**

3.01 **GENERAL**

A. Electrical Wiring: Install electrical devices furnished by equipment manufacturers but not factory mounted. Furnish copies of manufacturers' wiring diagram submittals to electrical Installer.

3.02 **EQUIPMENT FOUNDATIONS**

A. Provide equipment foundations of sufficient size and weight and of proper design to preclude shifting of equipment under operating conditions or under any abnormal conditions which could be imposed upon the equipment. Provide foundations which meet the requirements of the equipment manufacturer, and when required by the Contracting Officer, obtain from the equipment manufacturer approval of the foundation design and construction for the equipment involved. Equipment vibration shall be maintained within acceptable limits, and shall be suitably dampened and isolated.

3.03 **INSTALLATION OF INSTALLATION**

A. Install equipment strictly in accordance with these specifications, and the manufacturers' installation instructions. Grout equipment mounted on concrete foundations before piping is installed. Install piping in a manner that does not place a strain on any of the equipment. Do not bolt flanged joints tight unless they match properly. Extend expansion bends adequately before installation. Grade, anchor, guide and support piping without low pockets.

B. All equipment shall be installed true, level and in the location shown on the Drawings. Precision gauges and levels shall be used in setting all equipment.

C. Furnish, install and protect all necessary guides, bearing plates, anchor and attachment bolts, and all other appurtenances required for the installation of equipment.

D. All equipment shall be installed in such a manner as to provide access for routine maintenance, including lubrication.

E. Structural steel supports and miscellaneous steel required for supporting and/or hanging equipment and piping furnished under this Division shall be provided and installed.

F. All foundations, anchor pads, piers, thrust block, inertia blocks and structural steel supports shall be built to template and reinforced as required for loads imposed on them.

3.04 ALIGNMENT

A. Align air-compressor and driver shafts after complete unit has been leveled on concrete base, grout has set, and anchor bolts have been tightened.

B. After alignment is correct, tighten anchor bolts evenly. Fill baseplate completely with grout, with metal blocks and shims or wedges in place. Tighten anchor bolts after grout has hardened. Check alignment and make required corrections.

C. Align piping connections.

D. Align air-compressor shafts for angular and parallel alignment according to tolerances specified by manufacturer.

3.05 FIELD QUALITY CONTROL

A. Test each air-compressor with its controller as a unit.

B. Manufacturer's Field Service: Engage a factory-authorized service representative to inspect, test, and adjust components, assemblies, and equipment installations, including connections.

C. Tests and Inspections:
   1. After installing components, assemblies, and equipment including controller, test for compliance with requirements.
   2. Operational Test: After electrical circuitry has been energized, start units to confirm proper motor rotation and unit operation.
   3. Test and adjust controls and safeties. Replace damaged and malfunctioning controls and equipment.

D. Components, assemblies, and equipment will be considered defective if they do not pass tests and inspections.

E. Prepare test and inspection reports.

3.06 STARTUP SERVICE

A. Engage a factory-authorized service representative to perform startup service.
   1. Complete installation and startup checks according to manufacturer's written instructions.

3.07 DEMONSTRATION

A. Engage a factory-authorized service representative to train Owner's maintenance personnel to adjust, operate, and maintain air-compressors.

END OF SECTION 232420

SECTION 444249

OIL-WATER SEPARATOR

PART 1 GENERAL

1.01 RELATED WORK SPECIFIED ELSEWHERE

A. Earthwork: Section 310000.

B. Cast-In-Place Concrete: Section 033001.

C. Electrical Work: Division 26.

1.02 REFERENCES

A. Concrete Tank:
1. ASTM Standard C913 for Precast Water and Wastewater Structures.
2. ACI-318-89 Building Code Requirements For Reinforced Structural Concrete.
3. ACI-350R-89 Environmental Engineering Concrete Structures.
4. ASTM Standard C890 Minimum Structural Design Loading of Precast Concrete Water and Wastewater Structures.
5. AASHTO Vehicle Loads at Grade.

B. Fiberglass Tank:
1. API Manual on Disposal of Refinery Wastes.
2. API Bulletin No. 1630 (1st Edition).
3. API Bulletin No. 421.
4. Tank manufactured per ASTM D-4021.
5. Tank manufactured per U.L. 1316.
6. NFPA 30 - Flammable and Combustible Liquids Code.

C. Steel Tank:
1. Tank manufactured per U.L. 58.
2. Corrosion control system in strict conformance with Sti-P3 Specifications with a 30 year warranty. Tank manufacturer shall be a licensee of the Steel Tank Institute.
3. NFPA 30.

D. Standards: The oil water separator shall be designed in accordance with Stokes Law and the American Petroleum Institute Manual on Disposal of Refinery Wastes, Volume on Liquid Wastes as stated in Chapter 5, Oil Water Separator Process Design and API Bulletin No. 1630 First Edition, Waste Water Handling and Treatment Manual for Petroleum Marketing Facilities.

1.03 SYSTEM DESCRIPTION

A. The separator system shall be designed to perform as specified for variable, intermittent and continuous flows up to and including 100 gpm and containing 1000 ppm oil and grease with a specific gravity range of 0.68 and 0.9.

B. The unit shall incorporate a parallel plate coalescer enabling the removal of fine and widely dispersed oil and grease droplets by means of buoyant displacement to the underside of the plates where they undergo subsequent detachment in the form of globules rising to an upper self-contained holding and storage zone.

1.04 SUBMITTALS

A. Waiver of Submittals: The "Waiver of Certain Submittal Requirements" in Section 013300, does not apply to this Section.

B. Product Data: Catalog cuts with dimensions, specifications, installation instructions. Include one copy of operation and maintenance instructions for informational purposes.

C. Performance: Defined by influent and effluent characteristics.

D. Factory Test: Test certification for the tank.

E. Accessory Sensors and Alarms: Schematic wiring diagrams and bill of materials for each component of each sensor/alarm system.

F. Contract Closeout Submittals: Provide two additional copies of operation and maintenance instructions to the Director's Representative.

1.05 WARRANTY

A. Manufacturer's Warranty: The one year period required by Paragraph 9.8 of the General Conditions is extended to 30 years. The tank manufacturer shall warrant the oil/water separator tank for a period of 30 years against leakage due to internal corrosion, external corrosion, and structural failure.

PART 2 PRODUCTS

2.01 MANUFACTURERS

A. Concrete Tank: Oldcastle/Spancrete North, Inc., 123 County Route 101, P.O. Box 534, South Bethlehem, NY 12161, (518) 767-9390.

B. Fiberglass Tank: Fluid Containment, Inc., Route 20, Box 1380, Conroe, TX 77301-4124, (409) 756-7731.

C. Steel Tank:
1. Highland Tank and Manufacturing Co., One Highland Road, Stoystown, PA 15563, (814) 893-5701.
2. McTighe Industries, Inc., 2100 North Kimball Street, P.O. Box 928, Mitchell, SD 57301, (605) 996-1162.

3. Mohawk Metal Products Co., Inc., 2175 Beechgrove Place, Utica, NY 13501, (315) 793-3000.

2.02 TANK MATERIAL OPTION

A. The oil/water separator tank may be fabricated from concrete, fiberglass, or steel at the Contractor's option.

2.03 SEPARATOR TANK

A. Type: Heavy duty underground ~~double~~ single wall tank with product level monitoring system.
   1. Flanged inlet and outlet connections, including isolation spools for metal tanks.
   2. Internal inlet velocity head diffusion baffle or tee.
   3. Sediment chamber.
   4. Sludge baffle.
   5. Oil water separation chamber containing a parallel corrugated plate coalescer and a removable "Petroscreen" polypropylene coalescer designed to intercept oil droplets > 20 microns in size and to produce an effluent quality of 10 ppm or less of free oil and grease.
   6. Internal effluent downpipe for discharge of treated water to effluent pumpout chamber.
   7. Fittings for vents.
   8. Four inch diameter oil pump out and sampling pipe.
   9. Two inch diameter sensor pipe.
   10. Two 24 inch diameter manways, with extensions (if required), covers, gaskets, and bolts.
   11. Lifting lugs for installation.
   12. Electronic intrinsically safe oil level monitors and sensors to actuate visual and audible alarm.
   13. Metal tanks coated inside and out per manufacturer's recommendations. Concrete tanks coated inside with heavy coat of "Resist-All" sealant produced by Sealing Systems, Inc., 23230 W. Thomess Blvd., Lorretto, MN 55357, (612) 478-2057.

B. Capacity: 350 gallons.

C. Loading Conditions:
   1. Internal Load: Five pounds per square inch (PSIG) above ground air test. Contractor shall test prior to installation with a soap solution applied to weld seams in search of leaks.
   2. Surface Loads: Withstand surface H-20 axle loads when properly installed.
   3. Tank shall support accessory equipment when installed according to tank manufacturer's recommendations and limitations.

2.04 MISCELLANEOUS MATERIALS

A. Galvanized Pipe (For Vents). 3 inch - Schedule 40.

B. Steel Retaining Riser (For Manways): Size and length to be determined by tank manufacturer and site conditions.

C. Concrete Pad With Tank Hold-Down Device: Comply with manufacturer's recommendations.
   1. Straps with neoprene liners and turnbuckles.
   2. Anchors.
   3. Separating Pads: Made of inert dielectric material.

2.05 ACCESSORIES

A. Interface and Level Sensor: Intrinsically safe oil level controls to activate high level alarm at a predetermined oil level.

B. Alarm panel to monitor oil level sensors and activate a visual and audible alarm:
   1. Audible alarm and alarm light.
      a. Audible alarm shall be equipped with a silence switch.
      b. Annunciator light shall remain lit until off-normal condition has been corrected.
      c. Alarm shall have nameplate identification.
   2. Separate alarm light for high oil level (red) and caution oil level (yellow).
   3. Self-test button.
   4. Phenolic plastic nameplate identification for each light, switch, etc.
   5. Phenolic plastic nameplate identification for the alarm panel as follows, "Oil/Water Separator - Oil Level".

2.06 EFFLUENT PUMPOUT SYSTEM

A. Constructed as an internal integral component of the oil/water separator tank.

B. Equipment:
   1. Duplex, submersible, explosion-proof pumps capable of pumping a minimum of 10 GPM @ 16 feet TDH, 3/4 HP, 115V, 60 Hz.
      a. Acceptable Pump: 3000 Series, Model US-RC (AA05) manufactured by R.I. Corcoran Co., New Lenox, IL 60451, (815) 485-2156.
   2. Duplex motor control panel provided by the pump manufacturer to assure compatibility with pump operation:
      a. NEMA 4 enclosure.
      b. Equipped with hand-off-automatic pushbutton control, running lights, alternator, and high level alarm light.
      c. Phenolic plastic nameplate identification as follows:
         1) "Oil/Water Separator - Pump Control Panel".
         2) Nameplates identifying each switch and each light.
   3. Intrinsically safe water level sensing system for automatic pump control and alarm light.
   4. Remote-mounted audible alarm and alarm light.
      a. Audible alarm shall be equipped with a silence switch.
      b. Annunciator light shall remain lit until off-normal condition has been corrected.

5. Provide sufficient signal and power cable to reach motor control panel at the designated location via safety switches without intermediate splices.

2.07 ACCESS HATCH COVERS

A. Provide aluminum hatch covers suitable for H-20 wheel loading for access to tank manways.
   1. Size recommended by the oil/water separator manufacturer.
   2. Cover shall lay flat without any protrusions rising above the frame.
   3. Acceptable Door: Type JD-2, double leaf, aluminum access door with automatic hold-open arm, torsion bar counter balances and removable key wrench, all as manufactured by Bilco Company, New Haven, CT 06505, (203) 934-6363.

PART 3 EXECUTION

3.01 INSTALLATION

A. Perform tests in accordance with manufacturer's printed recommendations.
   1. Air test steel separator tanks above ground at 5 psig while a soap solution is applied to the weld seams to detect leaks.

B. Repair damaged coating with manufacturer's touch-up kit.

C. Excavate and install tank in accordance with manufacturer's recommendations.

D. Extend tank vents as indicated on contract drawings.

E. Backfill in accordance with manufacturer's printed recommendations.

F. Fill separator tank with clean water ballast. After ballasting is complete, check elevations for proper tolerances.

G. Field locate the control panel with alarm where indicated and as directed.

H. Provide electric service to the control panel(s) and make necessary electrical interconnection of panel(s), pumps, oil and water level sensors, and alarm.
   1. Electric work shall conform to the National Electrical Code (NEC).

3.02 CLEANING INFLUENT/EFFLUENT LINES

A. Flush existing lines connected to the oil/water separator and dispose of the effluent in accordance with NYS Department of Conservation Regulations.

END OF SECTION

MEDIUM VOLTAGE TRANSFORMER SCHEDULE

TRANSFORMER	CONFIGURATION	SIZE	PRIMARY	SECONDARY	FEEDERS	BUILDING	FEEDER SWITCH
T-1	WYE-WYE	225KVA	13.2KV, 3φ, 3W	120/208V, 3φ, 4W	3,4	B1: ADMINISTRATION	HVS-1
T-2A	WYE-WYE	750KVA	13.2KV, 3φ, 3W	120/208V, 3φ, 4W	1,2	B2: HOSPITAL/SEGRAGATION	HVS-2
T-2B	WYE-WYE	150KVA	13.2KV, 3φ, 3W	277/480V, 3φ, 4W	1,2	B2: HOSPITAL/SEGRAGATION	HVS-2
T-3	WYE-WYE	500KVA	13.2KV, 3φ, 3W	120/208V, 3φ, 4W	1,2	B3: KITCHEN	HVS-3
T-4A	SINGLE PHASE	167KVA	13.2KV, 1φ, 2W	120/240V, 1φ, 3W	1,2	B4: AUDITORIUM B18: CHAPEL	HVS-4
T-4B	WYE-DELTA	45KVA	13.2KV, 3φ, 3W	240V, 3φ, 4W	1,2	B4: AUDITORIUM B18: CHAPEL	HVS-4
T-7A	WYE-WYE	300KVA	13.2KV, 3φ, 3W	120/208V, 3φ, 4W	1,2	B7: AB BLOCK	HVS-7
T-7B	DELTA-WYE	30KVA	208V, 3φ, 3W	277/480V, 3φ, 4W	1,2	B7: AB BLOCK	-
T-8A	SINGLE PHASE	167KVA	13.2KV, 1φ, 2W	120/240V, 1φ, 3W	1,2	B8: CD BLOCK	HVS-8
T-8B	WYE-DELTA	45KVA	13.2KV, 3φ, 3W	240V, 3φ, 4W	1,2	B8: CD BLOCK	HVS-8
T-9A	WYE-WYE	150KVA	13.2KV, 3φ, 3W	120/208V, 3φ, 4W	1,2	B9: EF BLOCK	HVS-9
T-9B	SINGLE PHASE	167KVA	13.2KV, 1φ, 2W	120/240V, 1φ, 3W	1,2	B9: EF BLOCK	HVS-9
T-9C	DELTA-WYE	45KVA	208V, 3φ, 3W	277/480V, 3φ, 4W	1,2	B9: EF BLOCK	-
T-9D	DELTA-DELTA	45KVA	208V, 3φ, 3W	240V, 3φ, 4W	1,2	B9: EF BLOCK	-
T-10A	WYE-WYE	150KVA	13.2KV, 3φ, 3W	120/208V, 3φ, 4W	1,2	B10: GH BLOCK	HVS-10
T-10B	SINGLE PHASE	167KVA	13.2KV, 1φ, 2W	120/240V, 1φ, 3W	1,2	B10: GH BLOCK	HVS-10
T-10C	DELTA-DELTA	45KVA	208V, 3φ, 3W	240V, 3φ, 4W	1,2	B10: GH BLOCK	-
T-11	WYE-WYE	150KVA	13.2KV, 3φ, 3W	120/208V,3φ, 4W	1,2	B11: LAUNDRY	HVS-11
T-12	WYE-WYE	500KVA	13.2KV, 3φ, 3W	120/208V, 3φ, 4W	5,6	B12: VOCATIONAL SCHOOL	HVS-12
T-13A	WYE-WYE	300KVA	13.2KV, 3φ, 3W	120/208V, 3φ, 4W	5,6	B13: INDUSTRIAL SHOP	HVS-13
T-13B	SINGLE PHASE	75KVA	13.2KV, 1φ, 2W	120/240V, 1φ, 3W	5,6	B13: INDUSTRIAL SHOP	HVS-13
T-14A	WYE-WYE	225KVA	13.2KV, 3φ, 3W	277/480V, 3φ, 4W	5,6	B14A: DUST COLLECTOR	HVS-14
T-14B	WYE-DELTA	1000KVA	13.2KV, 3φ, 3W	240V, 3φ, 4W	5,6	B14: INDUSTRIAL SHOP	HVS-14
T-14C	WYE-WYE	300KVA	13.2KV, 3φ, 3W	120/208V, 3φ, 4W	5,6	B14: INDUSTRIAL SHOP	HVS-14
T-15	WYE-WYE	300KVA	13.2KV, 3φ, 3W	120/208V, 3φ, 4W	1,2	B15: J BLOCK	HVS-15
T-21	WYE-WYE	500KVA	13.2KV, 3φ, 3W	120/208V, 3φ, 4W	1,2	B21: J SCHOOL	HVS-21
T-22	WYE-WYE	150KVA	13.2KV, 3φ, 3W	120/208V, 3φ, 4W	5,6	B22: GYM	HVS-22
T-24	WYE-WYE	750KVA	13.2/2.4KV, 3φ	120/208V,3φ, 4W	PH1, PH2	B24: POWERHOUSE	HVS-24
T-25	SINGLE PHASE	75KVA	13.2KV, 1φ, 2W	120/240V,1φ, 3W	3,4	B25: EAS/ STAFF HOUSING B26: CREDIT UNION	HVS-25
T-31	WYE-DELTA	45KVA	13.2KV, 3φ, 3W	240V, 3φ, 4W	3,4	B31: TRAINING ACADEMY	HVS-49
T-44	WYE-WYE	150KVA	13.2KV, 3φ, 3W	120/208V, 3φ, 4W	3,4	B44: SEWAGE TREATMENT B71: DECHLORINATION BUILDING B93: UV BUILDING	HVS-44
T-49	SINGLE PHASE	167KVA	13.2KV, 1φ, 2W	120/240V,1φ, 3W	3,4	B49: STAFF RESIDENCE B31,32,26,50,51: STAFF RESIDENCES	HVS-49
T-52	WYE-WYE	225KVA	13.2KV, 3φ, 3W	120/208V, 3φ, 4W	3,4	B52: DAIRY BARN B41,54,56,57,70,95: FARM BUILDINGS	HVS-52
EX T-65A	WYE-DELTA	75KVA	13.2KV, 3φ, 3W	240V, 3φ, 4W	PH1,PH2	B65: QWL BUILDING	EX HVS-65
EX T-65B	SINGLE PHASE	75KVA	13.2KV, 1φ, 2W	120/240V, 1φ, 3W	PH1, PH2	B39: TOOL AND EQUIP STORAGE B40: PAINT SHED	EX HVS-65
T-73	WYE-WYE	750KVA	13.2KV, 3φ, 3W	120/208V, 3φ, 4W	3,4	B73: HEALTH CARE UNIT	HVS-73
T-74	SINGLE PHASE	10KVA	13.2KV, 1φ, 2W	120/240V,1φ, 3W	3,4	B74: TOWER 1	HVS-74
T-75	SINGLE PHASE	10KVA	13.2KV, 1φ, 2W	120/240V,1φ, 3W	3,4	B75: TOWER 2	HVS-75
T-76	SINGLE PHASE	10KVA	13.2KV, 1φ, 2W	120/240V,1φ, 3W	3,4	B76: TOWER 3	HVS-76
T-77	WYE-WYE	75KVA	13.2KV, 3φ, 3W	120/208V, 3φ, 4W	3,4	B77: TOWER 4 B16: FIREHOUSE NEW SHED B86: OLD OGS TRAILER NEW OGS TRAILER B67: MEDICAL WASTE STORAGE	HVS-77
T-78	SINGLE PHASE	75KVA	13.2KV, 1φ, 2W	120/240V,1φ, 3W	3,4	B78: TOWER 5 B28A,B,C: FAMILY REUNION TRAILERS	HVS-78
T-79	SINGLE PHASE	75KVA	13.2KV, 1φ, 2W	120/240V,1φ, 3W	5,6	B79: TOWER 6 B23: INMATE HOUSING ANNEX	HVS-79
T-80	SINGLE PHASE	10KVA	13.2KV, 1φ, 2W	120/240V,1φ, 3W	5,6	B80: TOWER 7	HVS-80
T-81	SINGLE PHASE	10KVA	13.2KV, 1φ, 2W	120/240V,1φ, 3W	5,6	B81: TOWER 8	HVS-81
T-82	SINGLE PHASE	10KVA	13.2KV, 1φ, 2W	120/240V,1φ, 3W	5,6	B82: TOWER 9	HVS-82
T-83	SINGLE PHASE	10KVA	13.2KV, 1φ, 2W	120/240V,1φ, 3W	5,6	B83: TOWER 10	HVS-83
T-84	SINGLE PHASE	10KVA	13.2KV, 1φ, 2W	120/240V,1φ, 3W	5,6	B84: TOWER 11	HVS-84
T-85	SINGLE PHASE	75KVA	13.2KV, 1φ, 2W	120/240V,1φ, 3W	5,6	B85: TOWER 12 B20: RECEPTION CENTER	HVS-85
EX T-91	WYE-WYE	300KVA	13.2KV, 3φ, 3W	277/480V, 3φ, 4W	3,4	B91: WATER TREATMENT PLANT	EX HVS-91
T-92	WYE-WYE	300KVA	13.2KV, 3φ, 3W	277/480V, 3φ, 4W	PH1,PH2	B92: PUMPHOUSE	HVS-92
T-TEMP	WYE-DELTA	2500KVA	13.2KV, 3φ, 3W	2.4KV, 3φ, 3W	SP2	2.4KV SWGR REFEED	13.2KV SWGR

TRANSFORMER PRIMARY FEEDERS

NAME	SETS	WIRE #	WIRE SIZE	CONDUIT SIZE
P-1	1	3	#2 AWG, 15KV, EPR W/ CU CONCENTRIC NEUTRAL	4" PVC
P-2A	1	3	#2 AWG, 15KV, EPR W/ CU CONCENTRIC NEUTRAL	4" PVC
P-2B	1	3	#2 AWG, 15KV, EPR W/ CU CONCENTRIC NEUTRAL	4" PVC
P-3	1	3	#2 AWG, 15KV, EPR W/ CU CONCENTRIC NEUTRAL	4" PVC
P-4A	1	3	#2 AWG, 15KV, EPR W/ CU CONCENTRIC NEUTRAL	4" PVC
P-4B	1	3	#2 AWG, 15KV, EPR W/ CU CONCENTRIC NEUTRAL	4" PVC
P-7A	1	3	#2 AWG, 15KV, EPR W/ CU CONCENTRIC NEUTRAL	4" PVC
P-7B	1	3	#2 AWG	N/A
P-8A	1	3	#2 AWG, 15KV, EPR W/ CU CONCENTRIC NEUTRAL	4" PVC
P-8B	1	3	#2 AWG, 15KV, EPR W/ CU CONCENTRIC NEUTRAL	4" PVC
P-9A	1	3	#2 AWG, 15KV, EPR W/ CU CONCENTRIC NEUTRAL	4" PVC
P-9B	1	3	#2 AWG, 15KV, EPR W/ CU CONCENTRIC NEUTRAL	4" PVC
P-9C	1	3	#2/0	N/A
P-9D	1	3	#2/0	N/A
P-10A	1	3	#2 AWG, 15KV, EPR W/ CU CONCENTRIC NEUTRAL	4" PVC
P-10B	1	3	#2 AWG, 15KV, EPR W/ CU CONCENTRIC NEUTRAL	4" PVC
P-10C			#2/0	N/A
P-11	1	3	#2 AWG, 15KV, EPR W/ CU CONCENTRIC NEUTRAL	4" PVC
P-12	1	3	#2 AWG, 15KV, EPR W/ CU CONCENTRIC NEUTRAL	4" PVC
P-13A	1	3	#2 AWG, 15KV, EPR W/ CU CONCENTRIC NEUTRAL	4" PVC
P-13B	1	3	#2 AWG, 15KV, EPR W/ CU CONCENTRIC NEUTRAL	4" PVC
P-14A	1	3	#2 AWG, 15KV, EPR W/ CU CONCENTRIC NEUTRAL	4" PVC
P-14B	1	3	#2 AWG, 15KV, EPR W/ CU CONCENTRIC NEUTRAL	4" PVC
P-14C	1	3	#2 AWG, 15KV, EPR W/ CU CONCENTRIC NEUTRAL	4" PVC
P-15	1	3	#2 AWG, 15KV, EPR W/ CU CONCENTRIC NEUTRAL	4" PVC
P-21	1	3	#2 AWG, 15KV, EPR W/ CU CONCENTRIC NEUTRAL	4" PVC
P-22	1	3	#2 AWG, 15KV, EPR W/ CU CONCENTRIC NEUTRAL	4" PVC
P-24	1	3	#2 AWG, 15KV, EPR W/ CU CONCENTRIC NEUTRAL	4" PVC
P-25	1	3	#2 AWG, 15KV, EPR W/ CU CONCENTRIC NEUTRAL	4" PVC
P-31	1	3	#2 AWG, 15KV, EPR W/ CU CONCENTRIC NEUTRAL	4" PVC
P-44	1	3	#2 AWG, 15KV, EPR W/ CU CONCENTRIC NEUTRAL	4" PVC
P-49	1	3	#2 AWG, 15KV, EPR W/ CU CONCENTRIC NEUTRAL	4" PVC
P-52	1	3	#2 AWG, 15KV, EPR W/ CU CONCENTRIC NEUTRAL	4" PVC
P-65A	1	3	#2 AWG, 15KV, EPR W/ CU CONCENTRIC NEUTRAL	4" PVC
P-65B	1	3	#2 AWG, 15KV, EPR W/ CU CONCENTRIC NEUTRAL	4" PVC
P-73	1	3	#2 AWG, 15KV, EPR W/ CU CONCENTRIC NEUTRAL	4" PVC
P-74	1	3	#2 AWG, 15KV, EPR W/ CU CONCENTRIC NEUTRAL	4" PVC
P-75	1	3	#2 AWG, 15KV, EPR W/ CU CONCENTRIC NEUTRAL	4" PVC
P-76	1	3	#2 AWG, 15KV, EPR W/ CU CONCENTRIC NEUTRAL	4" PVC
P-77	1	3	#2 AWG, 15KV, EPR W/ CU CONCENTRIC NEUTRAL	4" PVC
P-78	1	3	#2 AWG, 15KV, EPR W/ CU CONCENTRIC NEUTRAL	4" PVC
P-79	1	3	#2 AWG, 15KV, EPR W/ CU CONCENTRIC NEUTRAL	4" PVC
P-80	1	3	#2 AWG, 15KV, EPR W/ CU CONCENTRIC NEUTRAL	4" PVC
P-81	1	3	#2 AWG, 15KV, EPR W/ CU CONCENTRIC NEUTRAL	4" PVC
P-82	1	3	#2 AWG, 15KV, EPR W/ CU CONCENTRIC NEUTRAL	4" PVC
P-83	1	3	#2 AWG, 15KV, EPR W/ CU CONCENTRIC NEUTRAL	4" PVC
P-84	1	3	#2 AWG, 15KV, EPR W/ CU CONCENTRIC NEUTRAL	4" PVC
P-85	1	3	#2 AWG, 15KV, EPR W/ CU CONCENTRIC NEUTRAL	4" PVC
P-91	1	3	#2 AWG, 15KV, EPR W/ CU CONCENTRIC NEUTRAL	4" PVC
P-92	1	3	#2 AWG, 15KV, EPR W/ CU CONCENTRIC NEUTRAL	4" PVC
P-TEMP	1	3	#2 AWG, 15KV, EPR W/ CU CONCENTRIC NEUTRAL	4" PVC

SECONDARY FEEDERS

NAME	SETS	WIRE #	WIRE SIZE	CONDUIT SIZE	SSBJ SIZE
S-1	3	3 + N	300 KCMIL	3" RMC	#2 AWG
S-2A	7	3 + N	500 KCMIL	3 1/2" RMC	#1/0
S-2B	1	3 + N	#4/0	2 1/2" RMC	#2 AWG
S-3	5	3 + N	500 KCMIL	3 1/2" RMC	#1/0
S-4A	3	2 + N	350 KCMIL	2 1/2" RMC	#1/0
S-4B	1	3 + N	#1/0	1 1/4" RMC	#6 AWG
S-7A	3	3 + N	500 KCMIL	3 1/2" RMC	#1/0
S-7B	1	3 + N	#8 AWG	1" RMC	#8 AWG
S-8A	3	2 + N	350 KCMIL	2 1/2" RMC	#2 AWG
S-8B	1	3 + N	#1/0	1 1/4" RMC	#6 AWG
S-9A	3	3 + N	300 KCMIL	2 1/2" RMC	#2 AWG
S-9B	3	2 + N	350 KCMIL	2 1/2" RMC	#2 AWG
S-9C	1	3 + N	#6 AWG	3/4" RMC	#8 AWG
S-9D	1	3 + N	#1/0	1 1/4" RMC	#6 AWG
S-10A	3	3 + N	300 KCMIL	2 1/2" RMC	#2 AWG
S-10B	3	2 + N	350 KCMIL	2 1/2" RMC	#2 AWG
S-10C	1	3 + N	#1/0	1 1/4" RMC	#6 AWG
S-11	3	3 + N	300 KCMIL	2 1/2" RMC	#2 AWG
S-12A	2	3 + N	500 KCMIL	3 1/2" RMC	#1/0
S-12B	3	3 + N	500 KCMIL	3 1/2" RMC	#1/0
S-13A	3	3 + N	500 KCMIL	3 1/2" RMC	#1/0
S-13B	2	2 + N	#3/0	2" RMC	#6 AWG
S-14A	1	3 + N	500 KCMIL	3 1/2" RMC	#1/0
S-14B	7	3 + N	750 KCMIL	3 1/2" RMC	#2/0
S-14C	3	3 + N	500 KCMIL	3 1/2" RMC	#1/0
S-15	3	3 + N	500 KCMIL	3 1/2" RMC	#1/0
S-21	5	3 + N	500 KCMIL	3 1/2" RMC	#1/0
S-22	3	3 + N	300 KCMIL	2 1/2" RMC	#2 AWG
S-24	5	3 + N	500 KCMIL	3 1/2" RMC	#1/0
S-25	2	2 + N	#3/0	2" RMC	#4 AWG
S-31	1	3 + N	#1/0	1 1/4" RMC	#6 AWG
S-44	2	3 + N	300 KCMIL	2 1/2" RMC	#2 AWG
S-49	1	2 + N	350 KCMIL	2 1/2" RMC	#2 AWG
S-52	3	3 + N	300 KCMIL	2 1/2" RMC	#2 AWG
--	--	--	--	--	--
--	--	--	--	--	--
S-73	6	3 + N	500 KCMIL	3 1/2" RMC	#1/0 AWG
S-74	1	2 + N	#6 AWG	3/4" RMC	#8 AWG
S-75	1	2 + N	#6 AWG	3/4" RMC	#8 AWG
S-76	1	2 + N	#6 AWG	3/4" RMC	#8 AWG
S-77	1	3 + N	300 KCMIL	2 1/2" RMC	#2 AWG
S-78	2	2 + N	#3/0	2" RMC	#4 AWG
S-79	2	2 + N	#3/0	2" RMC	#4 AWG
S-80	1	2 + N	#6 AWG	3/4" RMC	#2 AWG
S-81	1	2 + N	#6 AWG	3/4" RMC	#2 AWG
S-82	1	2 + N	#6 AWG	3/4" RMC	#2 AWG
S-83	1	2 + N	#6 AWG	3/4" RMC	#2 AWG
S-84	1	2 + N	#6 AWG	3/4" RMC	#2 AWG
S-85	2	2 + N	#3/0	2" RMC	#4 AWG
--	--	--	--	--	--
S-92	4	3 + N	500 KCMIL	3" RMC	#1/0
S-TEMP	2	3 + N	500 KCMIL	4" RMC	#1/0

GENERAL NOTES:

1. REFER TO EC 200 SERIES DRAWINGS FOR PRIMARY FEEDER CONDUIT TYPE AND SIZE. ALL UNDERGROUND CONDUIT SHALL BE PVC UNLESS OTHERWISE NOTED ON THE DRAWINGS.
2. REFER TO EP DRAWING EQUIPMENT PAD DETAILS FOR TRANSFORMER GROUNDING REQUIREMENTS.
3. NEC TABLE 250.66 IS PROVIDED AS REFERENCE ONLY FOR SIZING THE REQUIRED BONDING JUMPER BETWEEN THE NEW PANELBOARD/SWITCHBOARD GROUND BUS AND THE ASSOCIATED BUILDING STEEL OR WATER PIPE. THE BONDING JUMPER SIZE MUST MEET ALL REQUIREMENTS OUTLINED IN THE NATIONAL ELECTRICAL CODE.
4. TRANSFORMER PRIMARY FEEDERS CONDUIT SIZE APPLIES ONLY TO UNDERGROUND CONDUIT BETWEEN THE REFERENCED HVS AND TRANSFORMER. REFER TO PANELBOARD SCHEDULES FOR REMAINING TRANSFORMER PRIMARY CONDUIT SIZES.
5. REFER TO EP NEW WORK DRAWINGS FOR FEEDER SWITCH FUSE RATINGS.

MEDIUM VOLTAGE FEEDER SCHEDULE

FDR NUMBER	WIRE SIZE
M1	#4/0 AWG, 15KV, EPR W/ CU CONCENTRIC NEUTRAL
GEN1	#4/0 AWG, 15KV, EPR W/ CU CONCENTRIC NEUTRAL
GEN2	#4/0 AWG, 15KV, EPR W/ CU CONCENTRIC NEUTRAL
PH1	#2 AWG, 15KV, EPR W/ CU CONCENTRIC NEUTRAL
PH2	#2 AWG, 15KV, EPR W/ CU CONCENTRIC NEUTRAL
SP1	#2 AWG, 15KV, EPR W/ CU CONCENTRIC NEUTRAL
SP2	N/A
#1	#2 AWG, 15KV, EPR W/ CU CONCENTRIC NEUTRAL
#2	#2 AWG, 15KV, EPR W/ CU CONCENTRIC NEUTRAL
#3	#2 AWG, 15KV, EPR W/ CU CONCENTRIC NEUTRAL
#4	#2 AWG, 15KV, EPR W/ CU CONCENTRIC NEUTRAL
#5	#2 AWG, 15KV, EPR W/ CU CONCENTRIC NEUTRAL
#6	#2 AWG, 15KV, EPR W/ CU CONCENTRIC NEUTRAL

NEC TABLE 250.66

SIZE OF LARGEST UNGROUNDED SERVICE-ENTRANCE CONDUCTOR OR EQUIVALENT AREA FOR PARALLEL CONDUCTORS (AWG/KCMIL)	SIZE OF GROUNDING ELECTRODE CONDUCTOR (AWG/KCMIL)
2 OR SMALLER	8
1 OR 1/0	6
2/0 OR 3/0	4
OVER 3/0 THROUGH 350	2
OVER 350 THROUGH 600	1/0
OVER 600 THROUGH 1100	2/0
OVER 1100	3/0

NYS OFFICE OF GENERAL SERVICES

Serving New York

ANDREW M. CUOMO
Governor
ROANN M. DESTITO
Commissioner

CONSULTANT

RMF ENGINEERING, INC., P.C.
(800) 938 - 5760
ALBANY • BALTIMORE • CHARLOTTESVILLE
DURHAM • CHARLESTON • ATLANTA
BOSTON • COLUMBUS

WARNING:
THE ALTERATION OF THIS MATERIAL IN ANY WAY, UNLESS DONE UNDER THE DIRECTION OF A COMPARABLE PROFESSIONAL, I.E. ARCHITECT FOR AN ARCHITECT, ENGINEER FOR AN ENGINEER OR LANDSCAPE ARCHITECT FOR A LANDSCAPE ARCHITECT, IS A VIOLATION OF THE NEW YORK STATE EDUCATION LAW AND/OR REGULATIONS AND IS A CLASS "A" MISDEMEANOR.

STATE OF NEW YORK — ANDREW JONATHAN FRY — LICENSED PROFESSIONAL ENGINEER — No. 089313

CONTRACT: ELECTRICAL

TITLE: PROVIDE ELECTRICAL UPGRADE FOR FEEDERS, TRANSFORMERS, AND SWITCHGEAR SITEWIDE.

LOCATION: GREENHAVEN CORRECTIONAL FACILITY
ROUTE 216
STORMVILLE, NEW YORK 12582

CLIENT: DEPARTMENT OF CORRECTIONAL SERVICES AND COMMUNITY SUPERVISION

MARK	DATE	DESCRIPTION
1	02-19-2013	ADDENDUM 2
–	10-02-2012	BID DOCUMENTS

PROJECT NUMBER: 42535-E
DESIGNED BY: JTM
DRAWN BY: TNC
FIELD CHECK: CNS
APPROVED: CNS
SHEET TITLE: TRANSFORMER SCHEDULE
DRAWING NUMBER: E6.01
SHEET 232 OF 284

PANEL NO.: MDP-81

USAGE: MAIN DISTRIBUTION PANELBOARD
LOCATION: BUILDING 81 ELECTRICAL ROOM
PHASE / FREQUENCY: 1 60 Hz
L-L VOLTS: 240
L-G VOLTS: 120
BUS AMPS: 100
FAULT CURRENT RATING: 25,000
MAIN CB AMPS: 100
AMBIENT TEMP. deg. C.: 40

MOUNTING: SURFACE
PANEL TYPE: SEE SPECIFICATIONS
PANEL NOTES: EQUIPPED WITH GROUND BUS
EQUIPPED WITH FULL SIZE NEUTRAL
BUS (UNLESS OTHERWISE NOTED)

CONDUIT TYPE	CONDUIT SIZE	PHASE & NEUTRAL SIZE	EGC SIZE	CKT AMPS	LOAD DESCRIPTION	C.B. POLES	C.B. TRIP	CIRCUIT NUMBER A B C	C.B. TRIP	C.B POLES	LOAD DESCRIPTION	CKT AMPS	CONDUIT SIZE	PHASE & NEUTRAL SIZE	EGC SIZE	CONDUIT TYPE
RMC	3/4"	#12	#12	8.33	EX BRANCH CIRCUIT	1	20	1 A 2	20	1	EX BRANCH CIRCUIT	8.33	3/4"	#12	#12	RMC
RMC	3/4"	#12	#12	8.33	EX BRANCH CIRCUIT	1	20	3 B 4	20	1	EX BRANCH CIRCUIT	8.33	3/4"	#12	#12	RMC
RMC	3/4"	#12	#12	8.33	EX BRANCH CIRCUIT	1	20	5 C 6	20	1	EX BRANCH CIRCUIT	8.33	3/4"	#12	#12	RMC
RMC	3/4"	#10	#10	16.67	EX BRANCH CIRCUIT	2	30	7 A 8	40	2	EX BRANCH CIRCUIT	29.17	-	-	-	RMC
RMC	-	-	-	0.00	-	-	-	9 B 10	-	-	-	0.00	-	-	-	RMC
RMC	3/4"	#8	#10	29.17	EX BRANCH CIRCUIT	2	40	11 C 12	40	1	EX BRANCH CIRCUIT	29.17	3/4"	#8	#10	RMC
RMC	-	-	-	0.00	-	-	-	13 A 14	-	-	-	0.00	-	-	-	RMC
RMC	-	-	-	0.00	TVSS	2	60	15 B 16	20	1	SPARE	0.00	-	-	-	RMC
RMC	-	-	-	0.00	-	-	-	17 C 18	20	1	SPARE	0.00	-	-	-	RMC

PANEL NO.: MDP-83

USAGE: MAIN DISTRIBUTION PANELBOARD
LOCATION: BUILDING 83 ELECTRICAL ROOM
PHASE / FREQUENCY: 1 60 Hz
L-L VOLTS: 240
L-G VOLTS: 120
BUS AMPS: 100
FAULT CURRENT RATING: 25,000
MAIN CB AMPS: 100
AMBIENT TEMP. deg. C.: 40

MOUNTING: SURFACE
PANEL TYPE: SEE SPECIFICATIONS
PANEL NOTES: EQUIPPED WITH GROUND BUS
EQUIPPED WITH FULL SIZE NEUTRAL
BUS (UNLESS OTHERWISE NOTED)

CONDUIT TYPE	CONDUIT SIZE	PHASE & NEUTRAL SIZE	EGC SIZE	CKT AMPS	LOAD DESCRIPTION	C.B. POLES	C.B. TRIP	CIRCUIT NUMBER A B C	C.B. TRIP	C.B POLES	LOAD DESCRIPTION	CKT AMPS	CONDUIT SIZE	PHASE & NEUTRAL SIZE	EGC SIZE	CONDUIT TYPE
RMC	3/4"	#12	#12	8.33	EX BRANCH CIRCUIT	1	20	1 A 2	20	1	EX BRANCH CIRCUIT	8.33	3/4"	#12	#12	RMC
RMC	3/4"	#12	#12	8.33	EX BRANCH CIRCUIT	1	20	3 B 4	20	1	EX BRANCH CIRCUIT	8.33	3/4"	#12	#12	RMC
RMC	3/4"	#12	#12	8.33	EX BRANCH CIRCUIT	1	20	5 C 6	20	1	EX BRANCH CIRCUIT	8.33	3/4"	#12	#12	RMC
RMC	3/4"	#10	#10	20.83	EX BRANCH CIRCUIT	2	30	7 A 8	40	2	EX BRANCH CIRCUIT	29.17	-	-	-	RMC
RMC	-	-	-	0.00	-	-	-	9 B 10	-	-	-	0.00	-	-	-	RMC
RMC	-	-	-	0.00	TVSS	2	60	11 C 12	20	1	SPARE	0.00	-	-	-	RMC
RMC	-	-	-	0.00	-	-	-	13 A 14	20	1	SPARE	0.00	-	-	-	RMC
RMC	-	-	-	0.00	SPARE	2	20	15 B 16	20	2	SPARE	0.00	-	-	-	RMC
RMC	-	-	-	0.00	-	-	-	17 C 18	-	-	-	0.00	-	-	-	RMC

PANEL NO.: MDP-85

USAGE: MAIN DISTRIBUTION PANELBOARD
LOCATION: BUILDING 85 ELECTRICAL ROOM
PHASE / FREQUENCY: 1 60 Hz
L-L VOLTS: 240
L-G VOLTS: 120
BUS AMPS: 225
FAULT CURRENT RATING: 25,000
MAIN CB AMPS: 225
AMBIENT TEMP. deg. C.: 40

MOUNTING: SURFACE
PANEL TYPE: SEE SPECIFICATIONS
PANEL NOTES: EQUIPPED WITH GROUND BUS
EQUIPPED WITH FULL SIZE NEUTRAL
BUS (UNLESS OTHERWISE NOTED)

CONDUIT TYPE	CONDUIT SIZE	PHASE & NEUTRAL SIZE	EGC SIZE	CKT AMPS	LOAD DESCRIPTION	C.B. POLES	C.B. TRIP	CIRCUIT NUMBER A B C	C.B. TRIP	C.B POLES	LOAD DESCRIPTION	CKT AMPS	CONDUIT SIZE	PHASE & NEUTRAL SIZE	EGC SIZE	CONDUIT TYPE
RMC	3/4"	#12	#12	8.33	EX BRANCH CIRCUIT	1	20	1 A 2	20	1	EX BRANCH CIRCUIT	8.33	3/4"	#12	#12	RMC
RMC	3/4"	#12	#12	8.33	EX BRANCH CIRCUIT	1	20	3 B 4	20	1	EX BRANCH CIRCUIT	8.33	3/4"	#12	#12	RMC
RMC	3/4"	#12	#12	8.33	EX BRANCH CIRCUIT	2	20	5 C 6	20	2	EX BRANCH CIRCUIT	8.33	3/4"	#12	#12	RMC
RMC	3/4"	#12	#12	8.33	EX BRANCH CIRCUIT	-	20	7 A 8	20	-	EX BRANCH CIRCUIT	8.33	3/4"	#12	#12	RMC
RMC	3/4"	#10	#10	20.83	EX BRANCH CIRCUIT	2	30	9 B 10	30	2	EX BRANCH CIRCUIT	20.83	3/4"	#10	#10	RMC
RMC	-	-	-	0.00	-	-	-	11 C 12	-	-	-	0.00	-	-	-	RMC
RMC	-	-	-	0.00	TVSS	2	60	13 A 14	20	1	SPARE	0.00	-	-	-	RMC
RMC	-	-	-	0.00	-	-	-	15 B 16	20	2	SPARE	0.00	-	-	-	RMC
RMC	-	-	-	0.00	SPARE	1	20	17 C 18	-	-	-	0.00	-	-	-	RMC

PANEL NO.: PP-22A

USAGE: GYMNASIUM POWER PANELBOARD
LOCATION: BUILDING 22 BASEMENT
PHASE / FREQUENCY: 3 60 Hz
L-L VOLTS: 208
L-G VOLTS: 120
BUS AMPS: 225
FAULT CURRENT RATING: 25,000
MAIN CB AMPS: 225
AMBIENT TEMP. deg. C.: 40

MOUNTING: SURFACE
PANEL TYPE: SEE SPECIFICATIONS
PANEL NOTES: EQUIPPED WITH GROUND BUS
EQUIPPED WITH FULL SIZE NEUTRAL
BUS (UNLESS OTHERWISE NOTED)

CONDUIT TYPE	CONDUIT SIZE	PHASE & NEUTRAL SIZE	EGC SIZE	CKT AMPS	LOAD DESCRIPTION	C.B. POLES	C.B. TRIP	CIRCUIT NUMBER A B C	C.B. TRIP	C.B POLES	LOAD DESCRIPTION	CKT AMPS	CONDUIT SIZE	PHASE & NEUTRAL SIZE	EGC SIZE	CONDUIT TYPE
RMC	1 1/4"	#1/0	#6	99.93	PP-22B	3	125	1 A 2	30	3	UNMARKED	16.67	3/4"	#10	#10	RMC
RMC	-	-	-	0.00	-	-	-	3 B 4	-	-	-	0.00	-	-	-	RMC
RMC	-	-	-	0.00	-	-	-	5 C 6	-	-	-	0.00	-	-	-	RMC
RMC	3/4"	#10	#10	16.65	SUMP PUMP	3	30	7 A 8	30	3	UNMARKED	16.67	3/4"	#10	#10	RMC
RMC	-	-	-	0.00	-	-	-	9 B 10	-	-	-	0.00	-	-	-	RMC
RMC	-	-	-	0.00	-	-	-	11 C 12	-	-	-	0.00	-	-	-	RMC
RMC	3/4"	#8	#10	29.15	UNMARKED	3	40	13 A 14	30	3	UNMARKED	16.67	3/4"	#10	#10	RMC
RMC	-	-	-	0.00	-	-	-	15 B 16	-	-	-	0.00	-	-	-	RMC
RMC	-	-	-	0.00	-	-	-	17 C 18	-	-	-	0.00	-	-	-	RMC
RMC	3/4"	#8	#10	29.15	UNMARKED	3	40	19 A 20	30	3	UNMARKED	16.67	3/4"	#10	#10	RMC
RMC	-	-	-	0.00	-	-	-	21 B 22	-	-	-	0.00	-	-	-	RMC
RMC	-	-	-	0.00	-	-	-	23 C 24	-	-	-	0.00	-	-	-	RMC
RMC	1 1/4"	#2	#8	74.94	UNMARKED	3	100	25 A 26	30	3	UNMARKED	16.67	3/4"	#10	#10	RMC
RMC	-	-	-	0.00	-	-	-	27 B 28	-	-	-	0.00	-	-	-	RMC
RMC	-	-	-	0.00	-	-	-	29 C 30	-	-	-	0.00	-	-	-	RMC

GENERAL NOTES:

1. PROVIDE INTEGRAL TVSS PROTECTION FOR ALL MAIN DISTRIBUTION PANELBOARDS AND SWITCHBOARDS.
2. FIELD VERIFY EXACT BRANCH CIRCUIT AMPERE RATING FOR ALL EXISTING MAIN DISTRIBUTION PANELBOARDS AND SWITCHBOARDS THAT THESE MAIN DISTRIBUTION PANELBOARDS AND SWITCHBOARDS REPLACE PRIOR TO SUBMITTING SUBMITTALS.
3. PROVIDE NEW BONDING JUMPER TO EXISTING STRUCTURAL STEEL OR WATER PIPE SIZED PER NEC TABLE 250.66 SHOWN ON DRAWING E6.01.

PANEL NO.: MDP-82

USAGE: MAIN DISTRIBUTION PANELBOARD
LOCATION: BUILDING 82 ELECTRICAL ROOM
PHASE / FREQUENCY: 1 60 Hz
L-L VOLTS: 240
L-G VOLTS: 120
BUS AMPS: 100
FAULT CURRENT RATING: 25,000
MAIN CB AMPS: 100
AMBIENT TEMP. deg. C.: 40

MOUNTING: SURFACE
PANEL TYPE: SEE SPECIFICATIONS
PANEL NOTES: EQUIPPED WITH GROUND BUS
EQUIPPED WITH FULL SIZE NEUTRAL
BUS (UNLESS OTHERWISE NOTED)

CONDUIT TYPE	CONDUIT SIZE	PHASE & NEUTRAL SIZE	EGC SIZE	CKT AMPS	LOAD DESCRIPTION	C.B. POLES	C.B. TRIP	CIRCUIT NUMBER A B C	C.B. TRIP	C.B POLES	LOAD DESCRIPTION	CKT AMPS	CONDUIT SIZE	PHASE & NEUTRAL SIZE	EGC SIZE	CONDUIT TYPE
RMC	3/4"	#12	#12	8.33	EX BRANCH CIRCUIT	1	20	1 A 2	20	1	EX BRANCH CIRCUIT	8.33	3/4"	#12	#12	RMC
RMC	3/4"	#12	#12	8.33	EX BRANCH CIRCUIT	1	20	3 B 4	20	1	EX BRANCH CIRCUIT	8.33	3/4"	#12	#12	RMC
RMC	3/4"	#12	#12	8.33	EX BRANCH CIRCUIT	1	20	5 C 6	20	1	EX BRANCH CIRCUIT	8.33	3/4"	#12	#12	RMC
RMC	3/4"	#10	#10	20.83	EX BRANCH CIRCUIT	2	30	7 A 8	40	2	EX BRANCH CIRCUIT	29.17	3/4"	#8	#10	RMC
RMC	-	-	-	0.00	-	-	-	9 B 10	-	-	-	0.00	-	-	-	RMC
RMC	3/4"	#8	#10	29.17	EX BRANCH CIRCUIT	2	40	11 C 12	20	1	SPARE	0.00	-	-	-	RMC
RMC	-	-	-	0.00	-	-	-	13 A 14	20	1	SPARE	0.00	-	-	-	RMC
RMC	-	-	-	0.00	TVSS	2	60	15 B 16	20	2	SPARE	0.00	-	-	-	RMC
RMC	-	-	-	0.00	-	-	-	17 C 18	-	-	-	0.00	-	-	-	RMC

PANEL NO.: MDP-84

USAGE: MAIN DISTRIBUTION PANELBOARD
LOCATION: BUILDING 84 ELECTRICAL ROOM
PHASE / FREQUENCY: 1 60 Hz
L-L VOLTS: 240
L-G VOLTS: 120
BUS AMPS: 100
FAULT CURRENT RATING: 25,000
MAIN CB AMPS: 100
AMBIENT TEMP. deg. C.: 40

MOUNTING: SURFACE
PANEL TYPE: SEE SPECIFICATIONS
PANEL NOTES: EQUIPPED WITH GROUND BUS
EQUIPPED WITH FULL SIZE NEUTRAL
BUS (UNLESS OTHERWISE NOTED)

CONDUIT TYPE	CONDUIT SIZE	PHASE & NEUTRAL SIZE	EGC SIZE	CKT AMPS	LOAD DESCRIPTION	C.B. POLES	C.B. TRIP	CIRCUIT NUMBER A B C	C.B. TRIP	C.B POLES	LOAD DESCRIPTION	CKT AMPS	CONDUIT SIZE	PHASE & NEUTRAL SIZE	EGC SIZE	CONDUIT TYPE
RMC	3/4"	#12	#12	8.33	EX BRANCH CIRCUIT	1	20	1 A 2	20	1	EX BRANCH CIRCUIT	8.33	3/4"	#12	#12	RMC
RMC	3/4"	#12	#12	8.33	EX BRANCH CIRCUIT	1	20	3 B 4	20	1	EX BRANCH CIRCUIT	8.33	3/4"	#12	#12	RMC
RMC	3/4"	#12	#12	8.33	EX BRANCH CIRCUIT	1	20	5 C 6	20	1	EX BRANCH CIRCUIT	8.33	3/4"	#12	#12	RMC
RMC	3/4"	#12	#12	8.33	EX BRANCH CIRCUIT	1	20	7 A 8	20	1	SPARE	0.00	-	-	-	RMC
RMC	3/4"	#10	#10	20.83	EX BRANCH CIRCUIT	2	30	9 B 10	40	2	EX BRANCH CIRCUIT	29.17	3/4"	#8	#10	RMC
RMC	-	-	-	0.00	-	-	-	11 C 12	-	-	-	0.00	-	-	-	RMC
RMC	-	-	-	0.00	TVSS	2	60	13 A 14	20	1	SPARE	0.00	-	-	-	RMC
RMC	-	-	-	0.00	-	-	-	15 B 16	20	2	SPARE	0.00	-	-	-	RMC
RMC	-	-	-	0.00	SPARE	1	20	17 C 18	-	-	-	0.00	-	-	-	RMC

PANEL NO.: PP-1

USAGE: POWERHOUSE POWER PANELBOARD
LOCATION: BUILDING 24 OPERATING FLOOR
PHASE / FREQUENCY: 3 60 Hz
L-L VOLTS: 208
L-G VOLTS: 120
BUS AMPS: 225
FAULT CURRENT RATING: 25,000
MAIN CB AMPS: 225
AMBIENT TEMP. deg. C.: 40

MOUNTING: SURFACE
PANEL TYPE: SEE SPECIFICATIONS
PANEL NOTES: EQUIPPED WITH GROUND BUS
EQUIPPED WITH FULL SIZE NEUTRAL
BUS (UNLESS OTHERWISE NOTED)

CONDUIT TYPE	CONDUIT SIZE	PHASE & NEUTRAL SIZE	EGC SIZE	CKT AMPS	LOAD DESCRIPTION	C.B. POLES	C.B. TRIP	CIRCUIT NUMBER A B C	C.B. TRIP	C.B POLES	LOAD DESCRIPTION	CKT AMPS	CONDUIT SIZE	PHASE & NEUTRAL SIZE	EGC SIZE	CONDUIT TYPE
RMC	3/4"	#12	#12	12.50	DAY TANK DT-01	1	20	1 A 2	20	1	FOPS-01 CP	12.50	3/4"	#12	#12	RMC
RMC	3/4"	#12	#12	12.50	DAY TANK DT-02	1	20	3 B 4	20	1	STRAT. FANS #1-#4	1.25	3/4"	#12	#12	RMC
RMC	3/4"	#12	#12	12.50	FPS-01 CP	1	20	5 C 6	20	1	LOWER LEVEL EMERG. LTG	6.00	3/4"	#12	#12	RMC
RMC	3/4"	#12	#12	10.00	FUS-01 CP	1	20	7 A 8	20	1	BASEMENT LIGHTING (a)	4.17	3/4"	#12	#12	RMC
RMC	3/4"	#12	#12	10.00	GLDS-01	1	20	9 B 10	20	1	CABLE VAULT LIGHTING	1.25	3/4"	#12	#12	RMC
RMC	3/4"	#10	#10	20.83	HVAC-1 CP	1	30	11 C 12	20	1	BASEMENT LIGHTING (b)	4.16	3/4"	#12	#12	RMC
RMC	3/4"	#12	#12	1.84	BAT CHARGER BC-1	3	20	13 A 14	20	1	BASMENT LIGHTING (c)	4.17	3/4"	#12	#12	RMC
RMC	-	-	-	1.83	-	-	-	15 B 16	20	1	EXTERIOR LIGHTING	3.17	3/4"	#12	#12	RMC
RMC	-	-	-	1.83	-	-	-	17 C 18	20	1	PLATFORM LIGHTING	1.25	3/4"	#12	#12	RMC
RMC	3/4"	#10	#10	17.92	AIR COND. ACU-01	2	30	19 A 20	20	3	ROLL UP DOOR RUD-01	5.00	3/4"	#12	#12	RMC
RMC	-	-	-	17.92	-	-	-	21 B 22	-	-	-	5.00	-	-	-	RMC
RMC	-	-	-	0.00	SPARE	1	20	23 C 24	-	-	-	5.00	-	-	-	RMC
RMC	3/4"	#12	#12	1.83	BAT CHARGER BC-2	3	20	25 A 26	20	3	FAN EF-04	2.25	3/4"	#12	#12	RMC
RMC	-	-	-	1.83	-	-	20	27 B 28	-	-	-	2.25	-	-	-	RMC
RMC	-	-	-	1.83	-	-	20	29 C 30	-	-	-	2.25	-	-	-	RMC
RMC	3/4"	#10	#12	14.99	BAT ROOM HEATER	3	20	31 A 32	20	1	PLATFORM EMERG. LTG	5.17	3/4"	#12	#12	RMC
RMC	-	-	-	14.99	-	-	-	33 B 34	20	1	SPARE	0.00	-	-	-	RMC
RMC	-	-	-	14.99	-	-	-	35 C 36	20	1	SPARE	0.00	-	-	-	RMC
RMC	3/4"	#12	#12	4.17	AIR COND. ACU-02	2	20	37 A 38	20	3	SPARE	0.00	-	-	-	RMC
RMC	-	-	-	0.00	-	-	-	39 B 40	-	-	-	0.00	-	-	-	RMC
RMC	-	-	-	0.00	SPARE	1	-	41 C 42	-	-	-	0.00	-	-	-	RMC

OGS
NYS OFFICE OF GENERAL SERVICES
Serving New York
ANDREW M. CUOMO, Governor
ROANN M. DESTITO, Commissioner

CONSULTANT
RMF ENGINEERING, INC., P.C.
(800) 938 - 5760
ALBANY • BALTIMORE • CHARLOTTESVILLE
DURHAM • CHARLESTON • ATLANTA
BOSTON • COLUMBUS

WARNING:
THE ALTERATION OF THIS MATERIAL IN ANY WAY, UNLESS DONE UNDER THE DIRECTION OF A COMPARABLE PROFESSIONAL, I.E. ARCHITECT FOR AN ARCHITECT, ENGINEER FOR AN ENGINEER OR LANDSCAPE ARCHITECT FOR A LANDSCAPE ARCHITECT, IS A VIOLATION OF THE NEW YORK STATE EDUCATION LAW AND/OR REGULATIONS AND IS A CLASS 'A' MISDEMEANOR.

STATE OF NEW YORK
LICENSED PROFESSIONAL ENGINEER
No. 089313

CONTRACT: ELECTRICAL
TITLE: PROVIDE ELECTRICAL UPGRADE FOR FEEDERS, TRANSFORMERS, AND SWITCHGEAR SITEWIDE.
LOCATION: GREENHAVEN CORRECTIONAL FACILITY, ROUTE 216, STORMVILLE, NEW YORK 12582
CLIENT: DEPARTMENT OF CORRECTIONAL SERVICES AND COMMUNITY SUPERVISION

MARK	DATE	DESCRIPTION
1	02-19-2013	ADDENDUM 2
–	10-02-2012	BID DOCUMENTS

PROJECT NUMBER: 42535-E
DESIGNED BY: JTM
DRAWN BY: TNC
FIELD CHECK: CNS
APPROVED: CNS
SHEET TITLE: PANELBOARD SCHEDULES
DRAWING NUMBER: E6.06
SHEET 237 OF 284

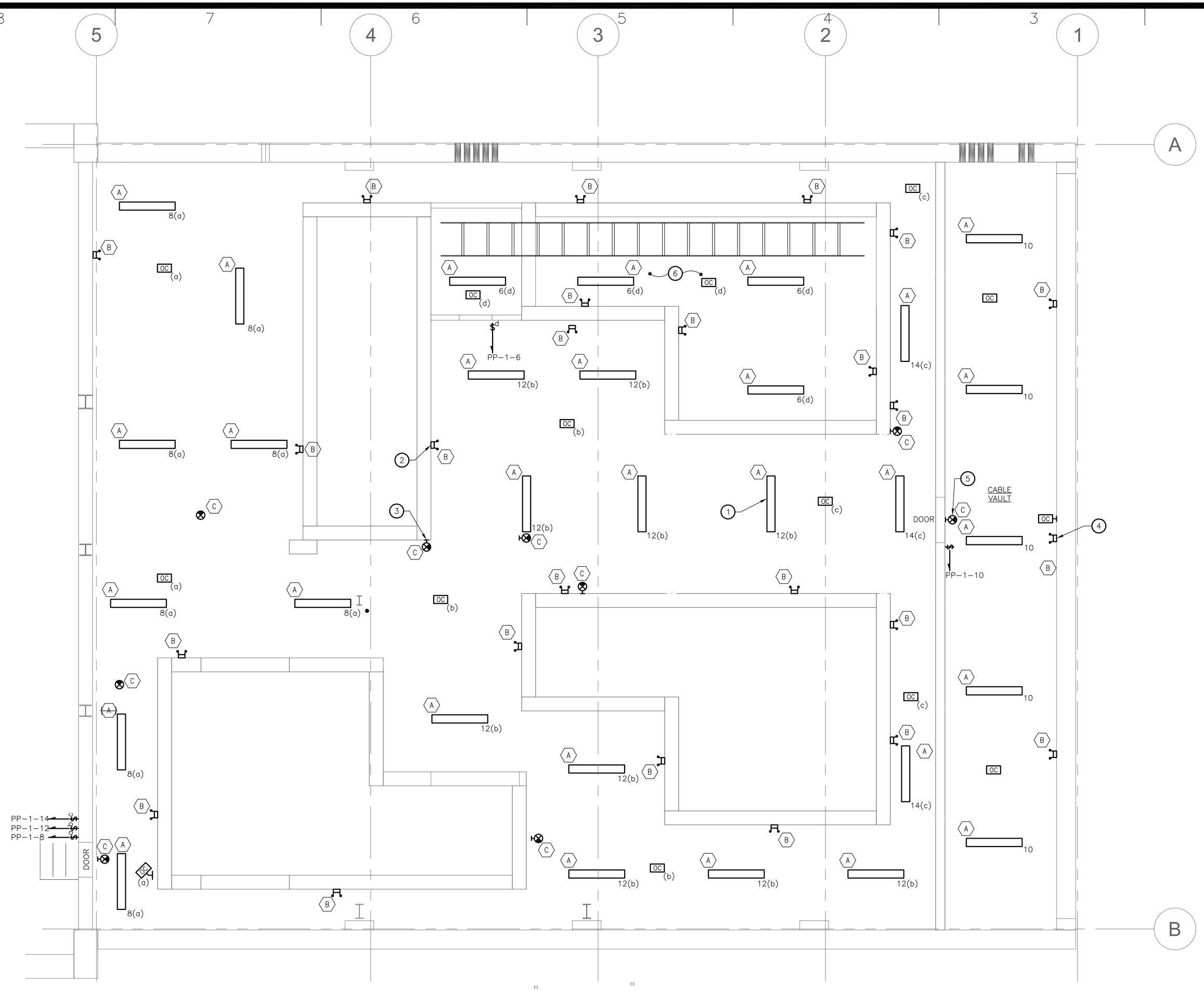

DRAWING NOTES:

1. ALL TYPE 'A' FIXTURES SHOULD BE CHAIN SUSPENDED FROM CEILING AT 9'-0" FROM FLOOR TO BOTTOM OF FIXTURE. UNLESS OTHERWISE NOTED. (TYPICAL)
2. CONNECT TYPE 'B' EMERGENCY LIGHTING FIXTURE TO CLOSEST UN-SWITCHED CIRCUIT IN BASEMENT AREA. (TYPICAL FOR ALL TYPE 'B' FIXTURES IN BASEMENT).
3. CONNECT TYPE 'C' EMERGENCY EXIT SIGN TO CLOSEST UN-SWITCHED CIRCUIT IN BASEMENT. (TYPICAL FOR ALL TYPE 'C' FIXTURES IN BASEMENT).
4. CONNECT TYPE 'B' EMERGENCY LIGHTING FIXTURE TO CLOSEST UN-SWITCHED CIRCUIT IN CABLE VAULT AREA. (TYPICAL FOR ALL TYPE 'B' FIXTURES IN CABLE VAULT).
5. CONNECT TYPE 'C' EMERGENCY EXIT SIGN TO CLOSEST UN-SWITCHED CIRCUIT IN CABLE VAULT. (TYPICAL FOR ALL TYPE 'C' FIXTURES IN CABLE VAULT).
6. 24" CABLE TRAY TO BE INSTALLED DURING PH2. SEE DRAWING EP1.21B FOR PH2 WORK IN THIS AREA.

LEGEND: THIS SHEET ONLY

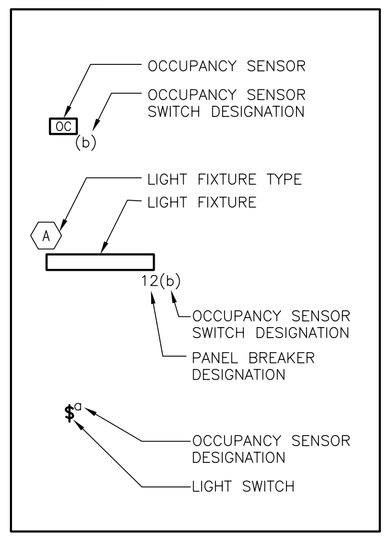

LIGHTING FIXTURE SCHEDULE

FIXTURE TYPE	FIXTURE DESCRIPTION	MANUFACTURER	CATALOG NUMBER	LAMPS QTY.	LAMPS TYPE	BALLAST QTY.	BALLAST VOLTS	BALLAST TYPE	MOUNTING HIEGHT	FITTINGS AND ACCESSORIES
A	7"X4' WET LOCATION ENCLOSED INDUSTRIAL LIGHT FIXTURE.	LIGHTOLIER OR EQUAL	ST-74-W-A-51A-40-U-PHA	N/A	LED	N/A	120	51A LED DRIVER	SEE DRAWINGS	FIXTURE TO BE CHAIN SUSPENDED. CONTRACTOR TO PROVIDE LIGHTOLIER STW END BRACKETS FOR MOUNTING.
B	EMERGENCY LIGHTING UNIT (INDUSTRIAL)	DUAL-LITE OR EQUAL	AS81-0618	2	6V PAR36 20W SEALED BEAM HALOGEN	1	120	6 VDC	7.5 FT	WITH MOUNTING SHELF, 15 MIN OFF-DELAY RELAY, SELF TEST DIAGNOSTICS. NICKEL-CADMIUM BATT.
C	EXIT SIGN	CHLORIDE LIGHTGUARD LITHONIA	XL-12L-2-R-W-NH-AC-DLU E1LOH12W-SR00ZOTE1CKIT LX-SW-2R-120/277-EL-TP	N/A	LED	1	120	N/A	7.5 FT	COMPLY WITH ALL LOCAL CODES AND STANDARDS FOR COLORS AND ARROWS.
D	LED FLOOD LIGHT	LITHONIA OR EQUAL	DSXF1 LED A530/50K MOLT THK VG-DDBXD	N/A	LED	1	120	CLASS 1 ELECTRONIC DRIVER	12.0 FT ABOVE GRADE	CONTRACTOR TO PROVIDE ONE FIXTURE WITH STEEL ANGLE BRACKET AND ONE TO BE MOUNTED ON SIDE OF BUILDING.
E	EXTERIOR WALL MOUNTED LED LIGHT FIXTURE	LITHONIA OR EQUAL	CSXW LED 1 30B530/50K SR2 MVOLT SF DBLXD	N/A	LED	1	120	CLASS 1 ELECTRONIC DRIVER	12.0 FT ABOVE SIDEWALK	CONTRACTOR TO ORDER SURFACE MOUNTED BOX IS NEEDED FOR CONDUIT ENTRY.
F	EMERGENCY LIGHTING UNIT	COOPER LIGHTING OR EQUAL	UEL1WHSD	2	12W MR16 LAMPS	1	120	CLASS 1 ELECTRONIC DRIVER	7.5FT ABOVE CATWALK	CONTRACTOR TO FIELD MOUNT TO RAILING. PROVIDE WIRE GUARD FOR FIXTURES

GRAPHIC SCALE
4 2 0 4 8
SCALE: 1/4"=1'-0"
UNIT OF MEASURE: FEET

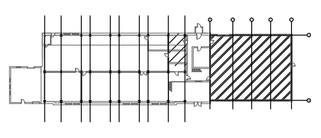

KEY PLAN
SCALE: NONE

NYS OFFICE OF GENERAL SERVICES
Serving New York
ANDREW M. CUOMO
Governor
ROANN M. DESTITO
Commissioner

CONSULTANT

RMF ENGINEERING, INC., P.C.
(800) 938 - 5760
ALBANY • BALTIMORE • CHARLOTTESVILLE
DURHAM • CHARLESTON • ATLANTA
BOSTON • COLUMBUS

WARNING:
THE ALTERATION OF THIS MATERIAL IN ANY WAY, UNLESS DONE UNDER THE DIRECTION OF A COMPARABLE PROFESSIONAL, I.E. ARCHITECT FOR AN ARCHITECT, ENGINEER FOR AN ENGINEER OR LANDSCAPE ARCHITECT FOR A LANDSCAPE ARCHITECT, IS A VIOLATION OF THE NEW YORK STATE EDUCATION LAW AND/OR REGULATIONS AND IS A CLASS 'A' MISDEMEANOR.

STATE OF NEW YORK · JAMES TENYON RIGGS · No. 091491 · LICENSED PROFESSIONAL ENGINEER
12/17/12

CONTRACT: ELECTRICAL

TITLE: PROVIDE ELECTRICAL UPGRADE FOR FEEDERS, TRANSFORMERS, AND SWITCHGEAR SITEWIDE.

LOCATION: GREENHAVEN CORRECTIONAL FACILITY
ROUTE 216
STORMVILLE, NEW YORK 12582

CLIENT: DEPARTMENT OF CORRECTIONAL SERVICES AND COMMUNITY SUPERVISION

MARK	DATE	DESCRIPTION
1	02-19-2013	ADDENDUM 2
	10-02-2012	BID DOCUMENTS

PROJECT NUMBER: 42535-E
DESIGNED BY: TNC
DRAWN BY: TNC
FIELD CHECK: CNS
APPROVED: CNS
SHEET TITLE:

ENGINE ROOM – BASEMENT LIGHTING – ELEV. 411.5' – NEW WORK – PHASE 1

DRAWING NUMBER: EL1.11B

SHEET 142 OF 284

GENERAL NOTES:

1. SEE DRAWING EL1.11B FOR LIGHT FIXTURE SCHEDULE.

DRAWING NOTES:

1. PHOTOCELL MOUNTED ON THE NORTH EAST SIDE BUILDING ROOF. CONTRACTOR TO COORDINATE PROPER MOUNTING LOCATION OF PHOTOCELL IN FIELD.

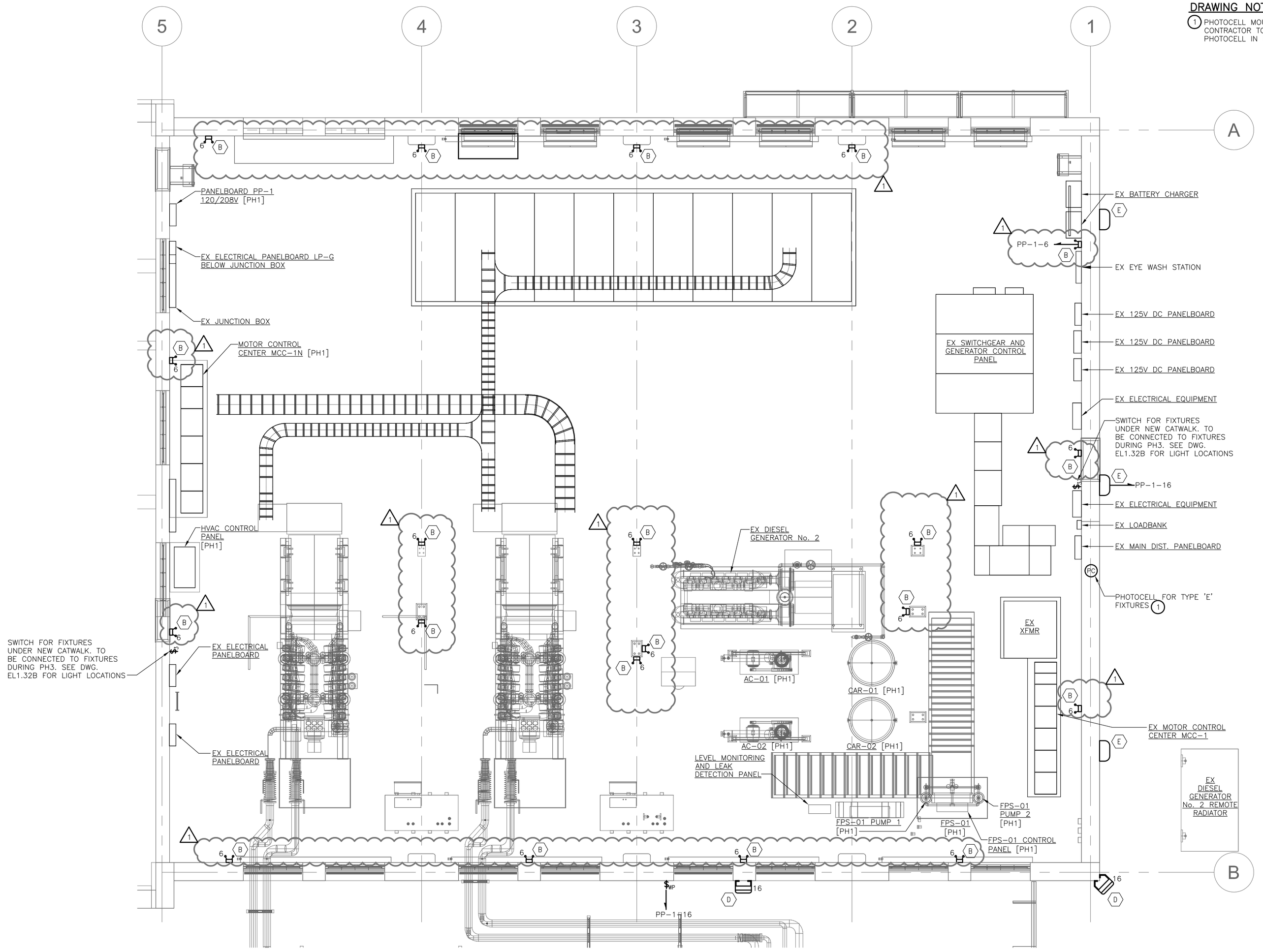

GRAPHIC SCALE
SCALE: 1/4"=1'-0"
UNIT OF MEASURE: FEET

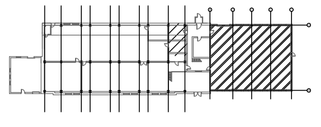

KEY PLAN
SCALE: NONE

NYS OFFICE OF GENERAL SERVICES
Serving New York
ANDREW M. CUOMO
Governor
ROANN M. DESTITO
Commissioner

CONSULTANT

RMF ENGINEERING, INC., P.C.
(800) 938 - 5760
ALBANY • BALTIMORE • CHARLOTTESVILLE
DURHAM • CHARLESTON • ATLANTA
BOSTON • COLUMBUS

WARNING:
THE ALTERATION OF THIS MATERIAL IN ANY WAY, UNLESS DONE UNDER THE DIRECTION OF A COMPARABLE PROFESSIONAL, I.E. ARCHITECT FOR AN ARCHITECT, ENGINEER FOR AN ENGINEER OR LANDSCAPE ARCHITECT FOR A LANDSCAPE ARCHITECT, IS A VIOLATION OF THE NEW YORK STATE EDUCATION LAW AND/OR REGULATIONS AND IS A CLASS 'A' MISDEMEANOR.

STATE OF NEW YORK · JAMES KENYON RIGGS · No. 091491 · LICENSED PROFESSIONAL ENGINEER
12/17/12

CONTRACT: ELECTRICAL

TITLE: PROVIDE ELECTRICAL UPGRADE FOR FEEDERS, TRANSFORMERS, AND SWITCHGEAR SITEWIDE.

LOCATION: GREENHAVEN CORRECTIONAL FACILITY
ROUTE 216
STORMVILLE, NEW YORK 12582

CLIENT: DEPARTMENT OF CORRECTIONAL SERVICES AND COMMUNITY SUPERVISION

MARK	DATE	DESCRIPTION
1	02-19-2013	ADDENDUM 2
–	10-02-2012	BID DOCUMENTS

PROJECT NUMBER:	42535-E
DESIGNED BY:	TNC
DRAWN BY:	TNC
FIELD CHECK:	CNS
APPROVED:	CNS

SHEET TITLE:
ENGINE ROOM – LOWER LEVEL LIGHTING – ELEV. 422.5' – NEW WORK – PHASE 1

DRAWING NUMBER: EL1.14B

SHEET 143 OF 284

GENERAL NOTES:

1. SEE DRAWING EL1.11B FOR LIGHT FIXTURE SCHEDULE.
2. ALL TYPE 'A' FIXTURES SHOWN ARE THIS DRAWING SHALL BE MOUNTED TO THE BOTTOM OF THE CATWALK.

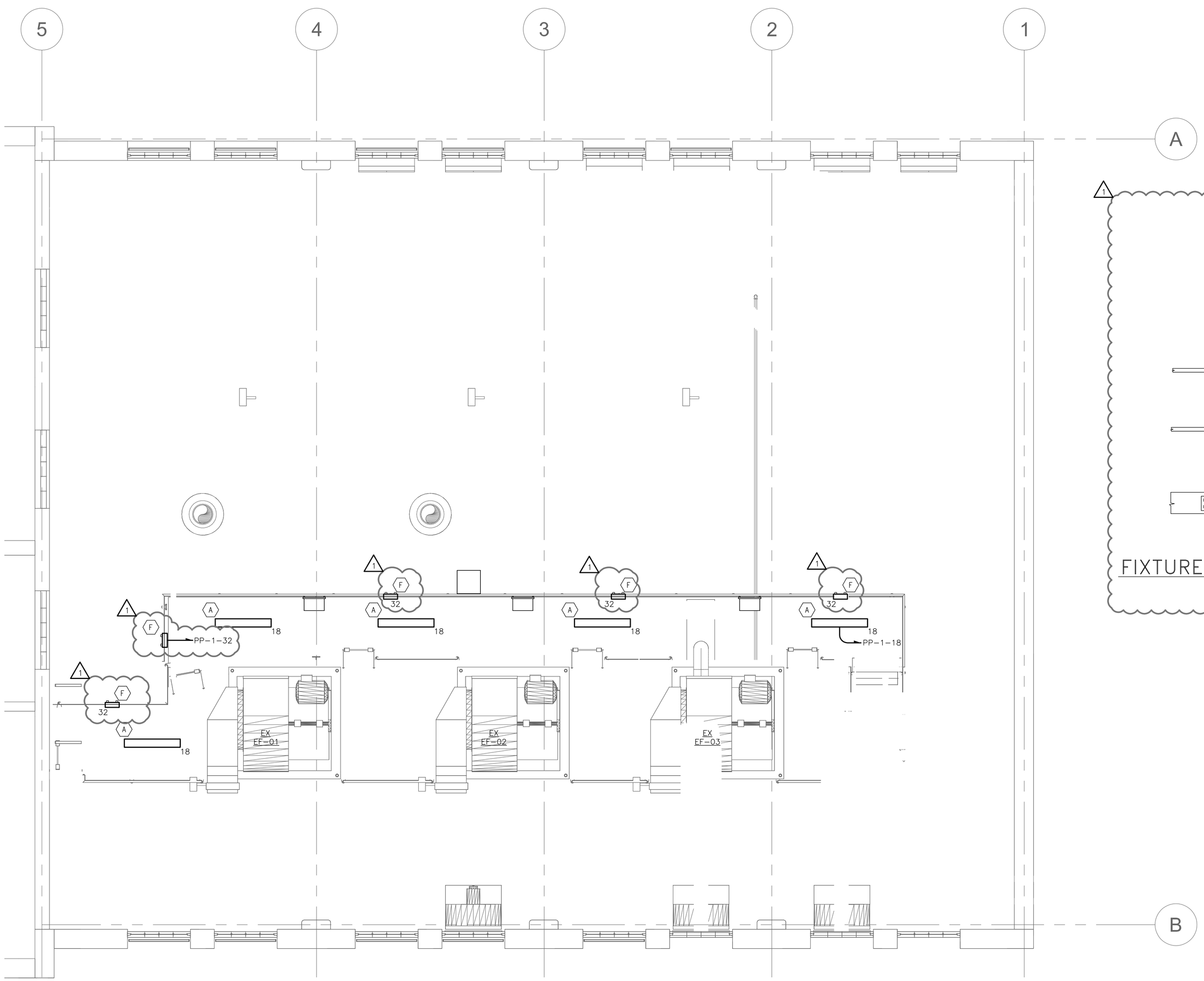

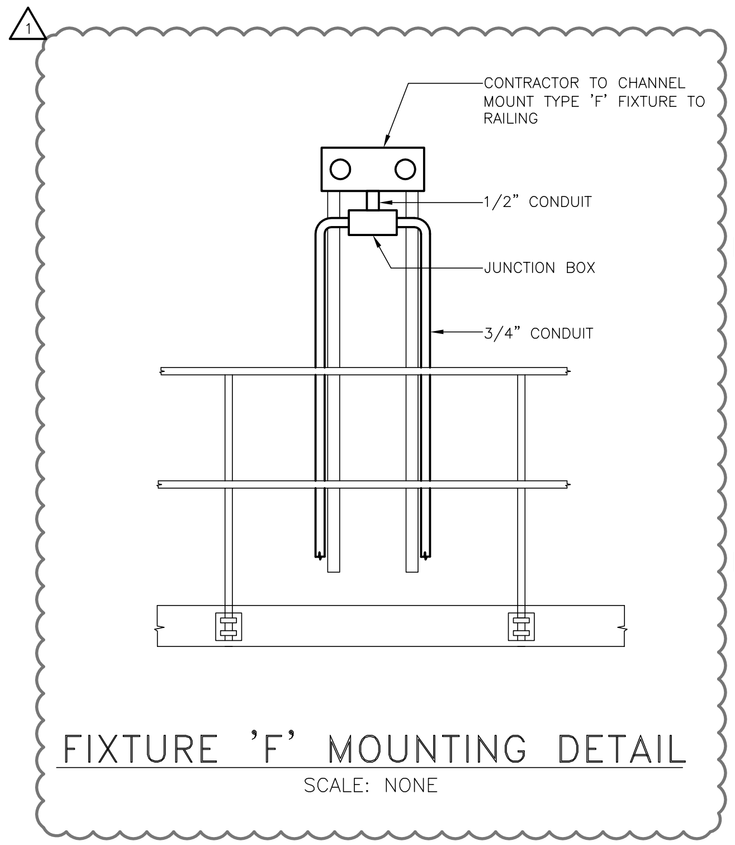

FIXTURE 'F' MOUNTING DETAIL

SCALE: NONE

GRAPHIC SCALE

SCALE: 1/4"=1'-0"
UNIT OF MEASURE: FEET

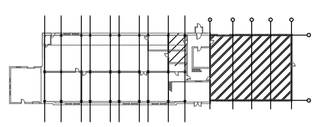

KEY PLAN

SCALE: NONE

NYS OFFICE OF GENERAL SERVICES

Serving New York

ANDREW M. CUOMO
Governor
ROANN M. DESTITO
Commissioner

CONSULTANT

RMF ENGINEERING, INC., P.C.
(800) 938 - 5760
ALBANY • BALTIMORE • CHARLOTTESVILLE
DURHAM • CHARLESTON • ATLANTA
BOSTON • COLUMBUS

WARNING:

THE ALTERATION OF THIS MATERIAL IN ANY WAY, UNLESS DONE UNDER THE DIRECTION OF A COMPARABLE PROFESSIONAL, I.E. ARCHITECT FOR AN ARCHITECT, ENGINEER FOR AN ENGINEER OR LANDSCAPE ARCHITECT FOR A LANDSCAPE ARCHITECT, IS A VIOLATION OF THE NEW YORK STATE EDUCATION LAW AND/OR REGULATIONS AND IS A CLASS 'A' MISDEMEANOR.

STATE OF NEW YORK · JAMES TENYON RIGGS · No. 081491 · LICENSED PROFESSIONAL ENGINEER

12/17/12

CONTRACT: ELECTRICAL

TITLE: PROVIDE ELECTRICAL UPGRADE FOR FEEDERS, TRANSFORMERS, AND SWITCHGEAR SITEWIDE.

LOCATION: GREENHAVEN CORRECTIONAL FACILITY
ROUTE 216
STORMVILLE, NEW YORK 12582

CLIENT: DEPARTMENT OF CORRECTIONAL SERVICES AND COMMUNITY SUPERVISION

MARK	DATE	DESCRIPTION
1	02-19-2013	ADDENDUM 2
–	10-02-2012	BID DOCUMENTS

PROJECT NUMBER:	42535-E
DESIGNED BY:	TNC
DRAWN BY:	TNC
FIELD CHECK:	CNS
APPROVED:	CNS

SHEET TITLE:

ENGINE ROOM – UPPER LEVEL
LIGHTING – ELEV. 437.0' –
NEW WORK – PHASE 3

DRAWING NUMBER: EL1.32B

SHEET 144 OF 284

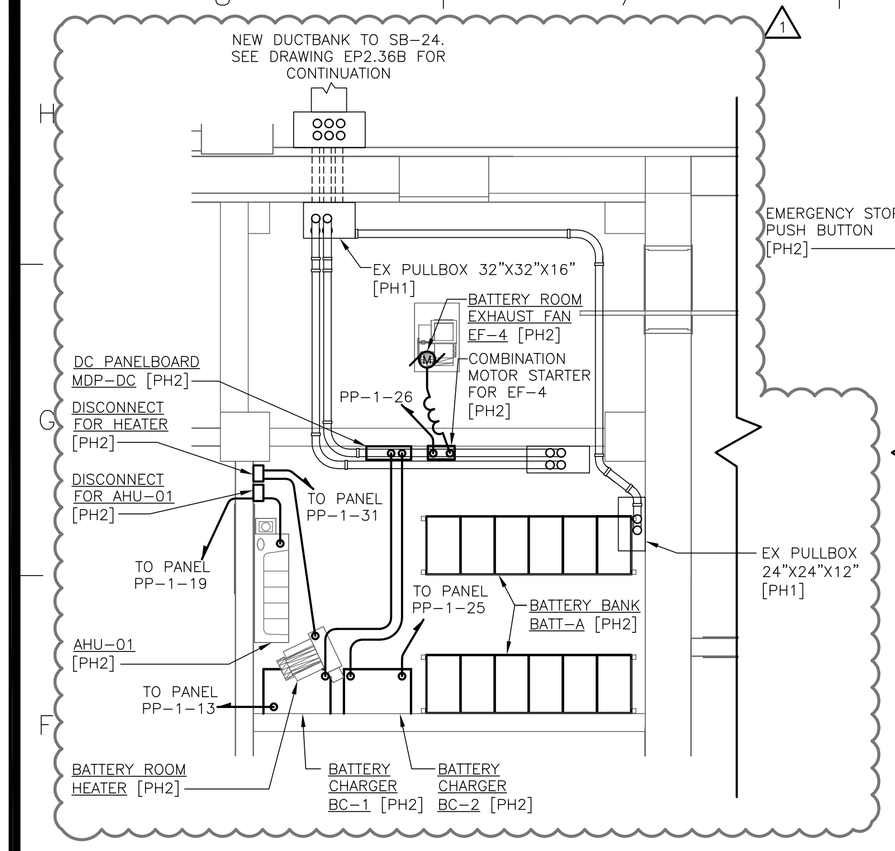

BATTERY ROOM – PHASE 2 – NEW WORK

SCALE: 1/4" = 1'-0"

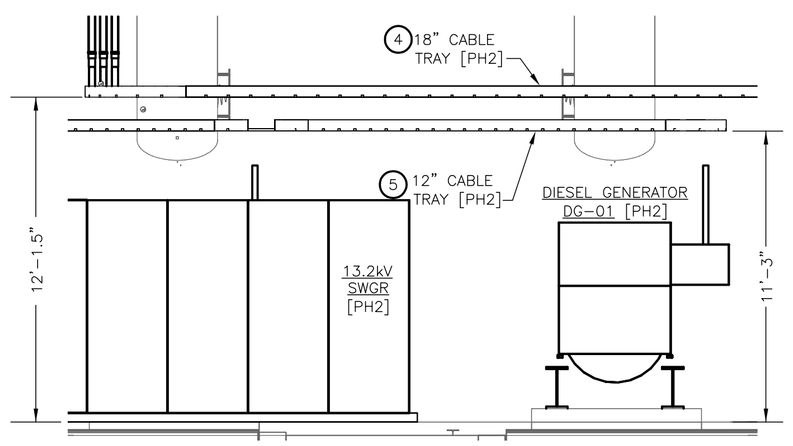

A EP1.22B ELEVATION – ELEC. EQUIP. – NEW WORK

SCALE: 1/4" = 1'-0"

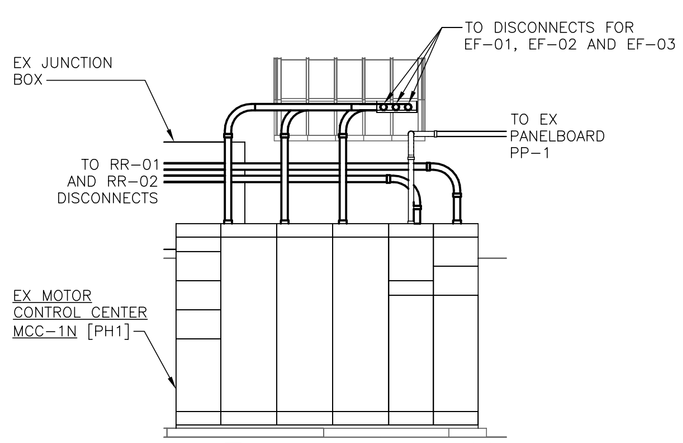

B EP1.22B ELEVATION – ELECTRICAL EQUIPMENT– NEW WORK

SCALE: 1/4" = 1'-0"

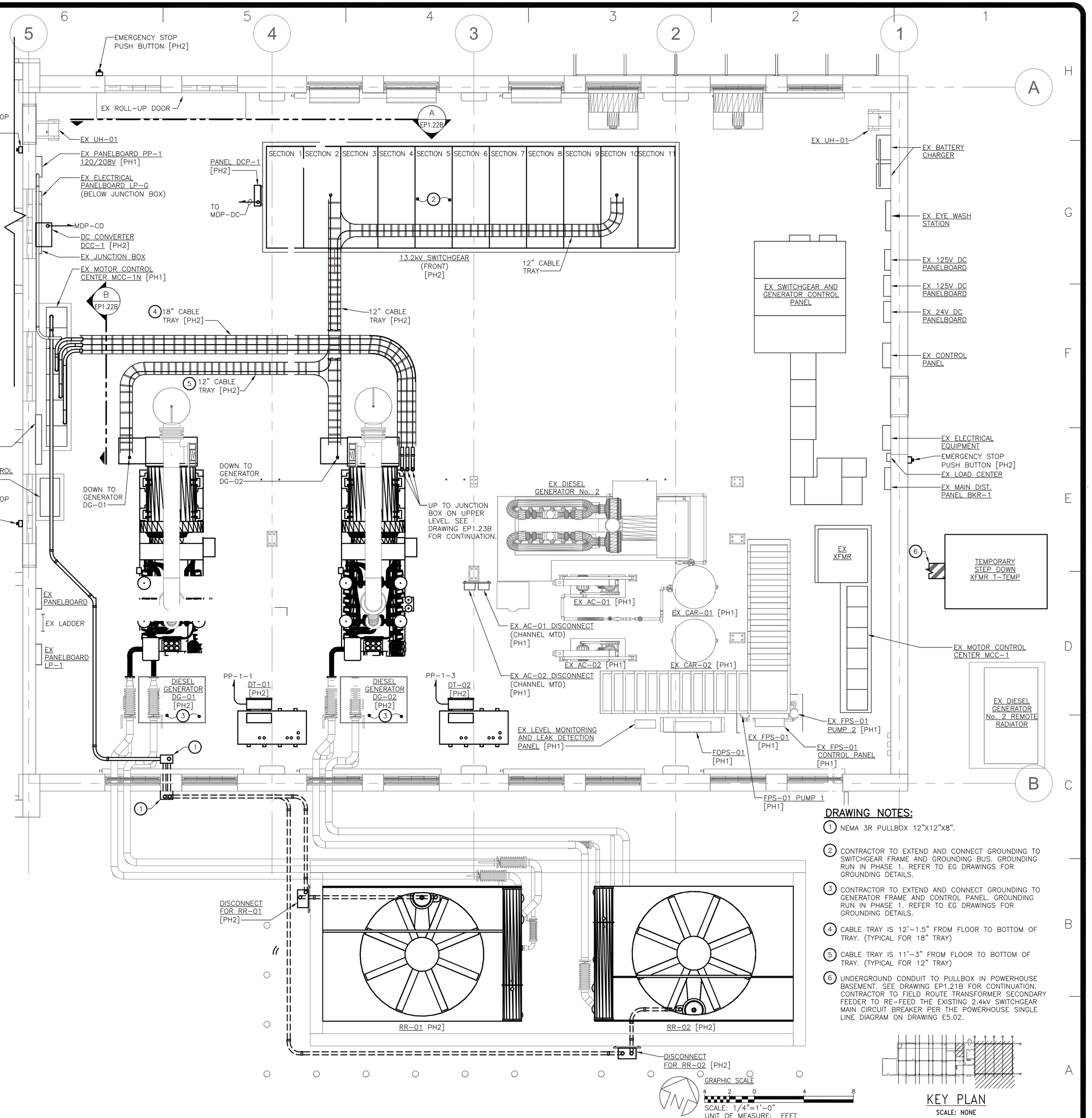

DRAWING NOTES:

1. NEMA 3R PULLBOX 12"X12"X8".
2. CONTRACTOR TO EXTEND AND CONNECT GROUNDING TO SWITCHGEAR FRAME AND GROUNDING BUS. GROUNDING RUN IN PHASE 1. REFER TO EG DRAWINGS FOR GROUNDING DETAILS.
3. CONTRACTOR TO EXTEND AND CONNECT GROUNDING TO GENERATOR FRAME AND CONTROL PANEL. GROUNDING RUN IN PHASE 1. REFER TO EG DRAWINGS FOR GROUNDING DETAILS.
4. CABLE TRAY IS 12'-1.5" FROM FLOOR TO BOTTOM OF TRAY. (TYPICAL FOR 18" TRAY)
5. CABLE TRAY IS 11'-3" FROM FLOOR TO BOTTOM OF TRAY. (TYPICAL FOR 12" TRAY)
6. UNDERGROUND CONDUIT TO PULLBOX IN POWERHOUSE BASEMENT. SEE DRAWING EP1.21B FOR CONTINUATION. CONTRACTOR TO FIELD ROUTE TRANSFORMER SECONDARY FEEDER TO RE-FEED THE EXISTING 2.4kV SWITCHGEAR MAIN CIRCUIT BREAKER PER THE POWERHOUSE SINGLE LINE DIAGRAM ON DRAWING E5.02.

KEY PLAN

SCALE: NONE

NYS OFFICE OF GENERAL SERVICES

Serving New York

ANDREW M. CUOMO
Governor
ROANN M. DESTITO
Commissioner

CONSULTANT

RMF ENGINEERING, INC., P.C.
(800) 938 - 5760
ALBANY • BALTIMORE • CHARLOTTESVILLE
DURHAM • CHARLESTON • ATLANTA
BOSTON • COLUMBUS

WARNING:

THE ALTERATION OF THIS MATERIAL IN ANY WAY, UNLESS DONE UNDER THE DIRECTION OF A COMPARABLE PROFESSIONAL, I.E. ARCHITECT FOR AN ARCHITECT, ENGINEER FOR AN ENGINEER OR LANDSCAPE ARCHITECT FOR A LANDSCAPE ARCHITECT, IS A VIOLATION OF THE NEW YORK STATE EDUCATION LAW AND/OR REGULATIONS AND IS A CLASS 'A' MISDEMEANOR.

STATE OF NEW YORK · ANDREW JONATHAN RAY · LIC. NO. 089313 · LICENSED PROFESSIONAL ENGINEER

CONTRACT: ELECTRICAL

TITLE: PROVIDE ELECTRICAL UPGRADE FOR FEEDERS, TRANSFORMERS, AND SWITCHGEAR SITEWIDE.

LOCATION: GREENHAVEN CORRECTIONAL FACILITY ROUTE 216 STORMVILLE, NEW YORK 12582

CLIENT: DEPARTMENT OF CORRECTIONAL SERVICES AND COMMUNITY SUPERVISION

MARK	DATE	DESCRIPTION
1	02–19–2013	ADDENDUM 2
–	10–02–2012	BID DOCUMENTS

PROJECT NUMBER:	42535–E
DESIGNED BY:	JTM
DRAWN BY:	TNC
FIELD CHECK:	CNS
APPROVED:	CNS

SHEET TITLE: ENGINE ROOM – LOWER LEVEL PLAN – ELEV. 422.5' – NEW WORK – PHASE 2

DRAWING NUMBER: EP1.22B

SHEET 135 OF 284

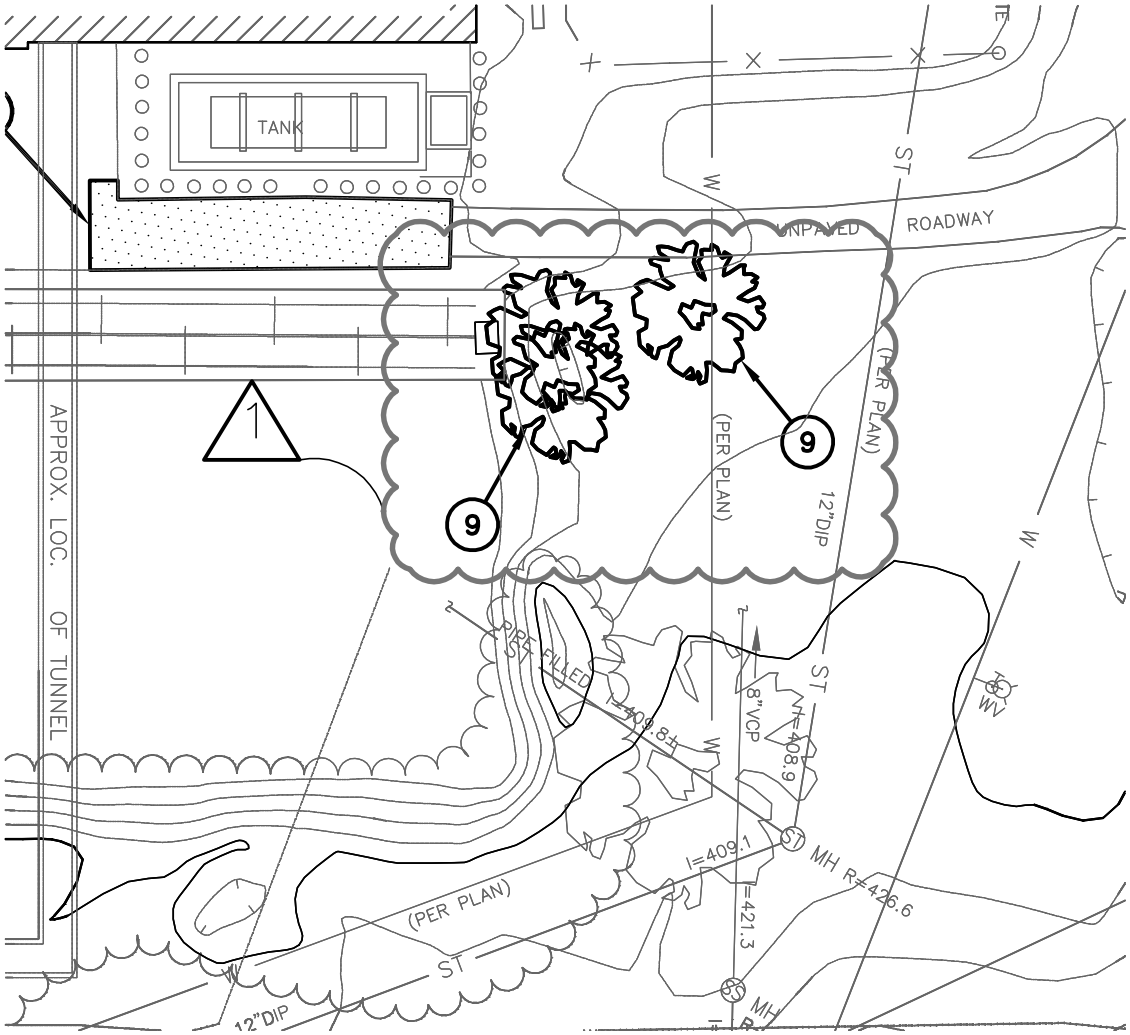

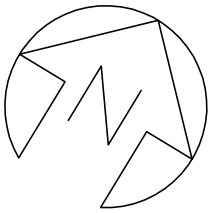

GRAPHIC SCALE

30 15 0 30 60

SCALE: 1" = 30'
UNIT OF MEASURE: FEET

SHEET TITLE: DEMOLITION PLAN – AREA 7	NYS OFFICE OF GENERAL SERVICES Serving New York ANDREW M. CUOMO Governor ROANN M. DESTITO Commissioner	RMF Engineering Reliability. Efficiency. Integrity.	
PROJECT: ADDENDUM NO. 2 TO PROJECT NO. 42535–E GREEN HAVEN CORRECTIONAL FACILITY STORMVILLE, NY		PROJECT NO: 111109.A0	SCALE: AS SHOWN
		DATE: 02/19/13	DWG NO: SK–EC1.07–1

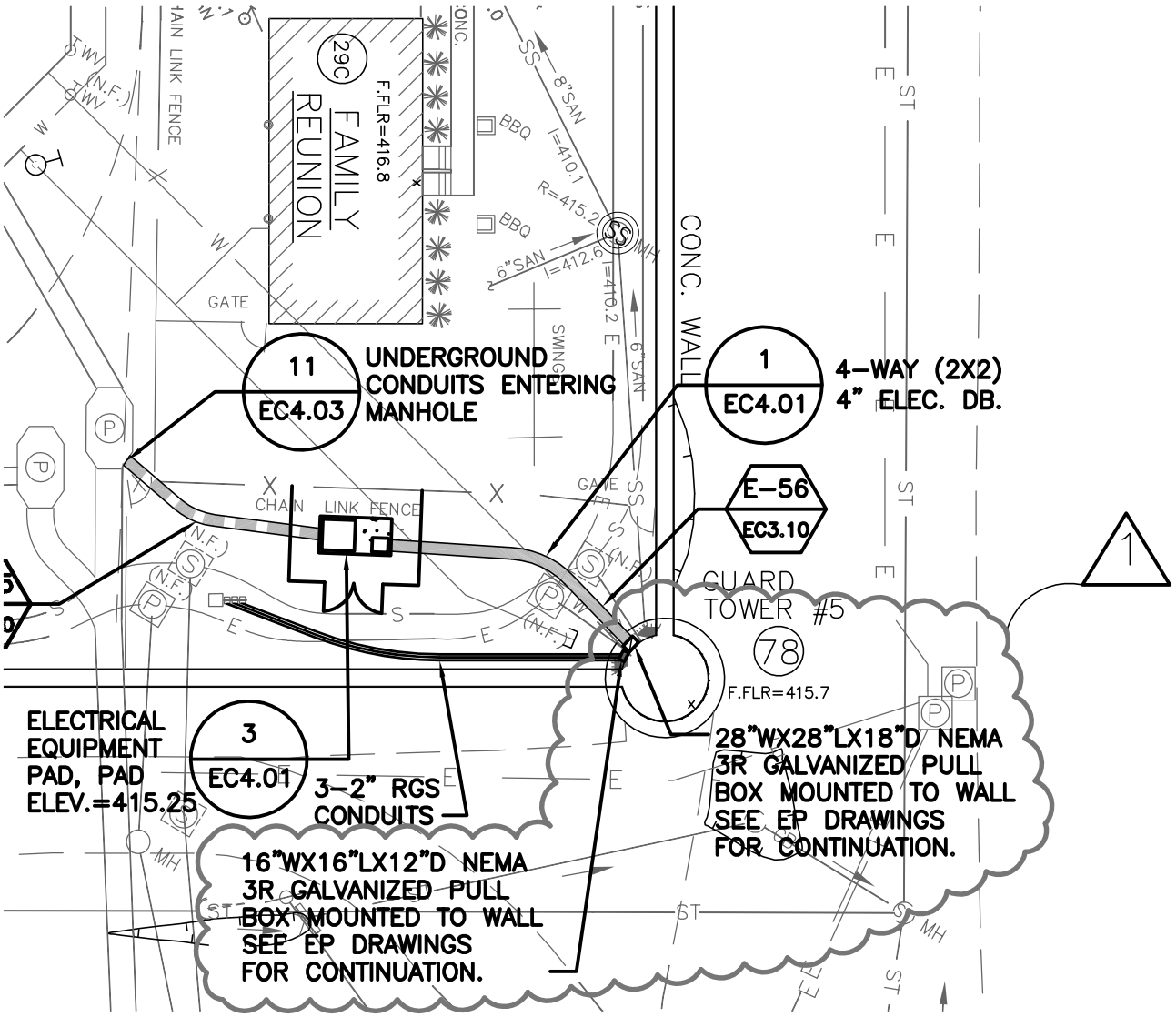

GRAPHIC SCALE

30 15 0 30 60

SCALE: 1" = 30'
UNIT OF MEASURE: FEET

SHEET TITLE: UTILITY SITE PLAN – AREA 6	NYS OFFICE OF GENERAL SERVICES Serving New York ANDREW M. CUOMO Governor ROANN M. DESTITO Commissioner	RMF Engineering Reliability. Efficiency. Integrity.	
PROJECT: ADDENDUM NO. 2 TO PROJECT NO. 42535-E GREEN HAVEN CORRECTIONAL FACILITY STORMVILLE, NY		PROJECT NO: 111109.A0	SCALE: AS SHOWN
		DATE: 02/19/13	DWG NO: SK-EC2.06-1

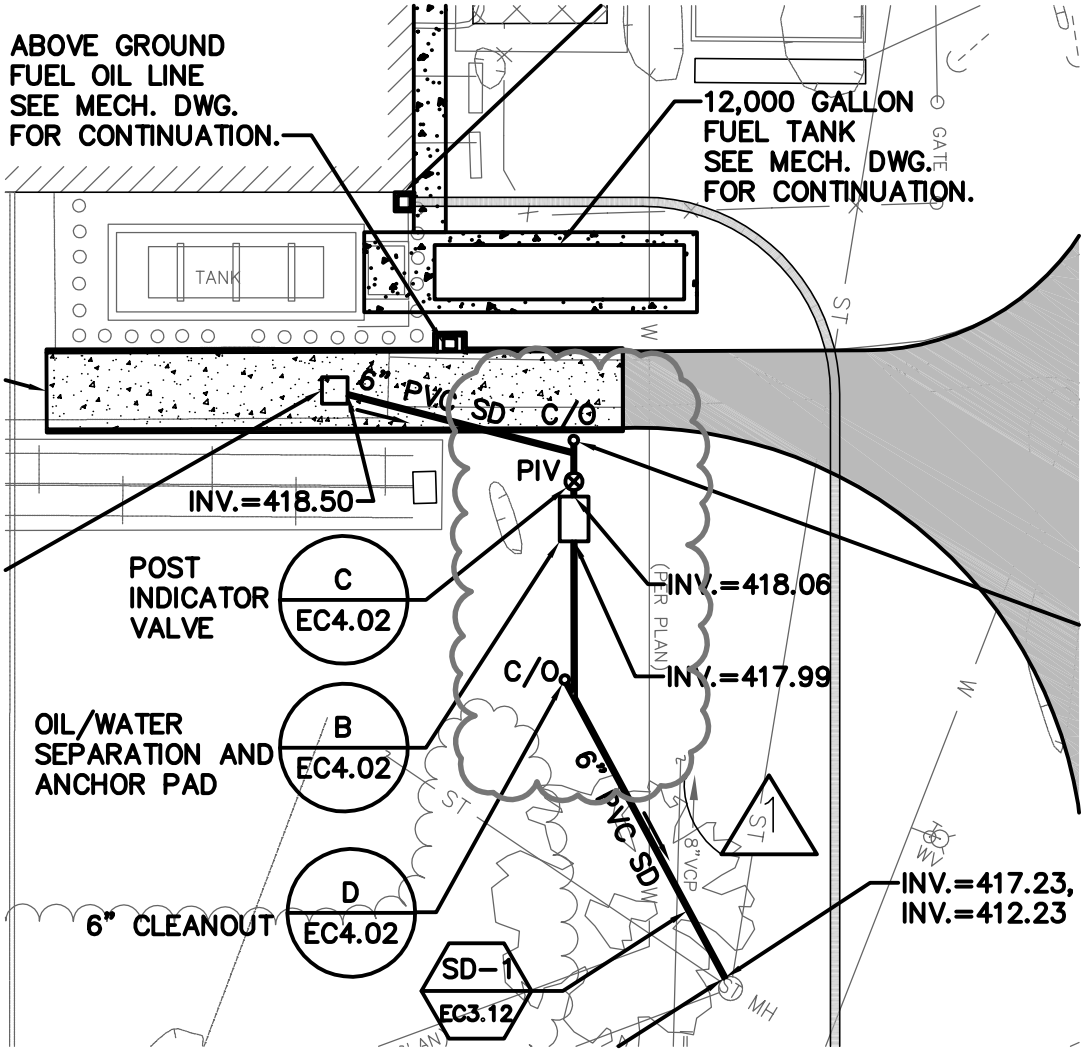

GRAPHIC SCALE

30 15 0 30 60

SCALE: 1" = 30'
UNIT OF MEASURE: FEET

SHEET TITLE: UTILITY SITE PLAN – AREA 7	NYS OFFICE OF GENERAL SERVICES Serving New York ANDREW M. CUOMO Governor ROANN M. DESTITO Commissioner	RMF Engineering Reliability. Efficiency. Integrity.	
PROJECT: ADDENDUM NO. 2 TO PROJECT NO. 42535-E GREEN HAVEN CORRECTIONAL FACILITY STORMVILLE, NY		PROJECT NO: 111109.A0	SCALE: AS SHOWN
		DATE: 02/19/13	DWG NO: SK-EC2.07-1

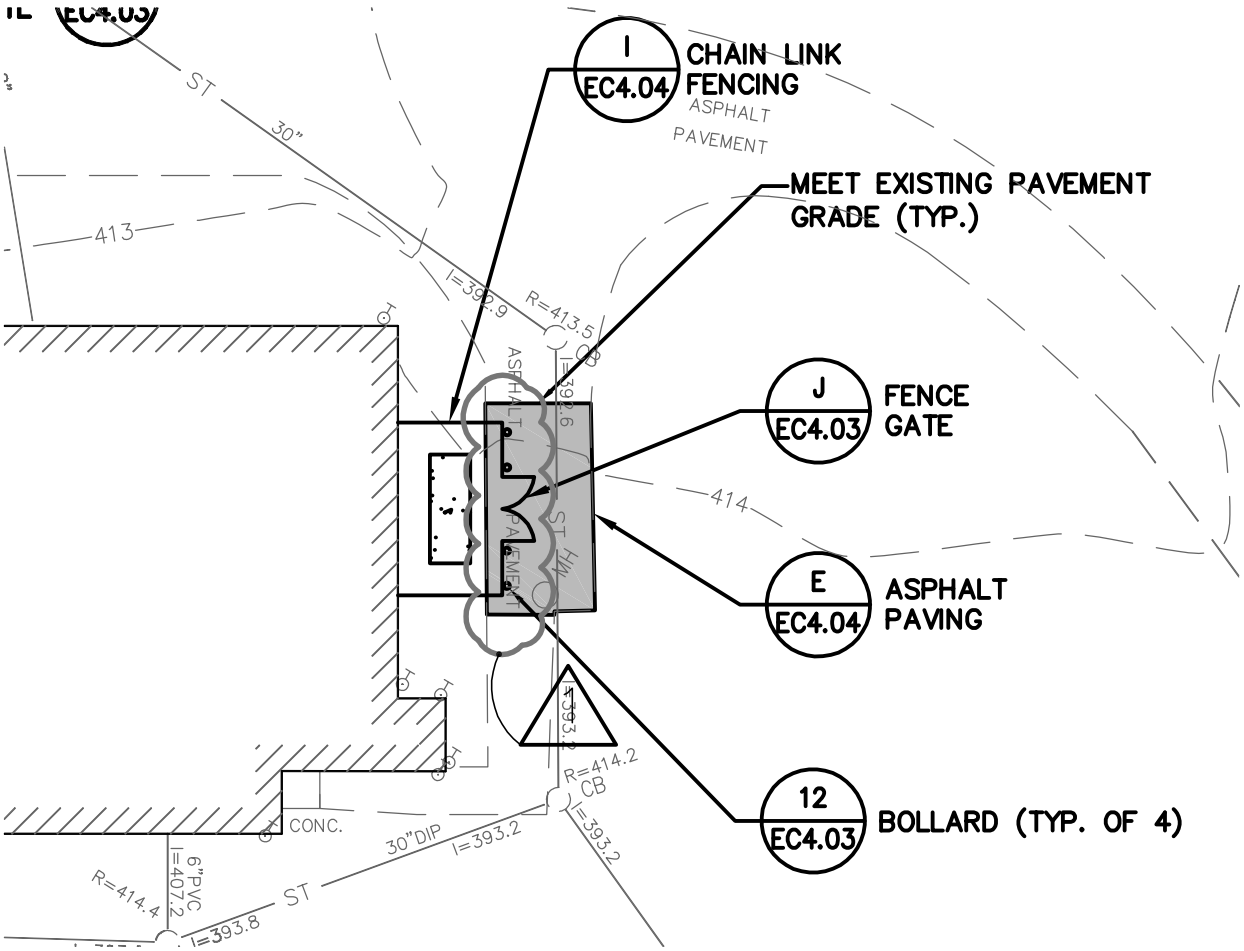

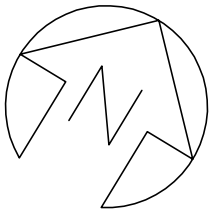

GRAPHIC SCALE

30 15 0 30 60

SCALE: 1" = 30'
UNIT OF MEASURE: FEET

SHEET TITLE: RESTORATION PLAN – AREA 2	NYS OFFICE OF GENERAL SERVICES Serving New York ANDREW M. CUOMO Governor ROANN M. DESTITO Commissioner	RMF Engineering Reliability. Efficiency. Integrity.	
PROJECT: ADDENDUM NO. 2 TO PROJECT NO. 42535–E GREEN HAVEN CORRECTIONAL FACILITY STORMVILLE, NY		PROJECT NO: 111109.A0	SCALE: AS SHOWN
		DATE: 02/19/13	DWG NO: SK–EC2.15–1

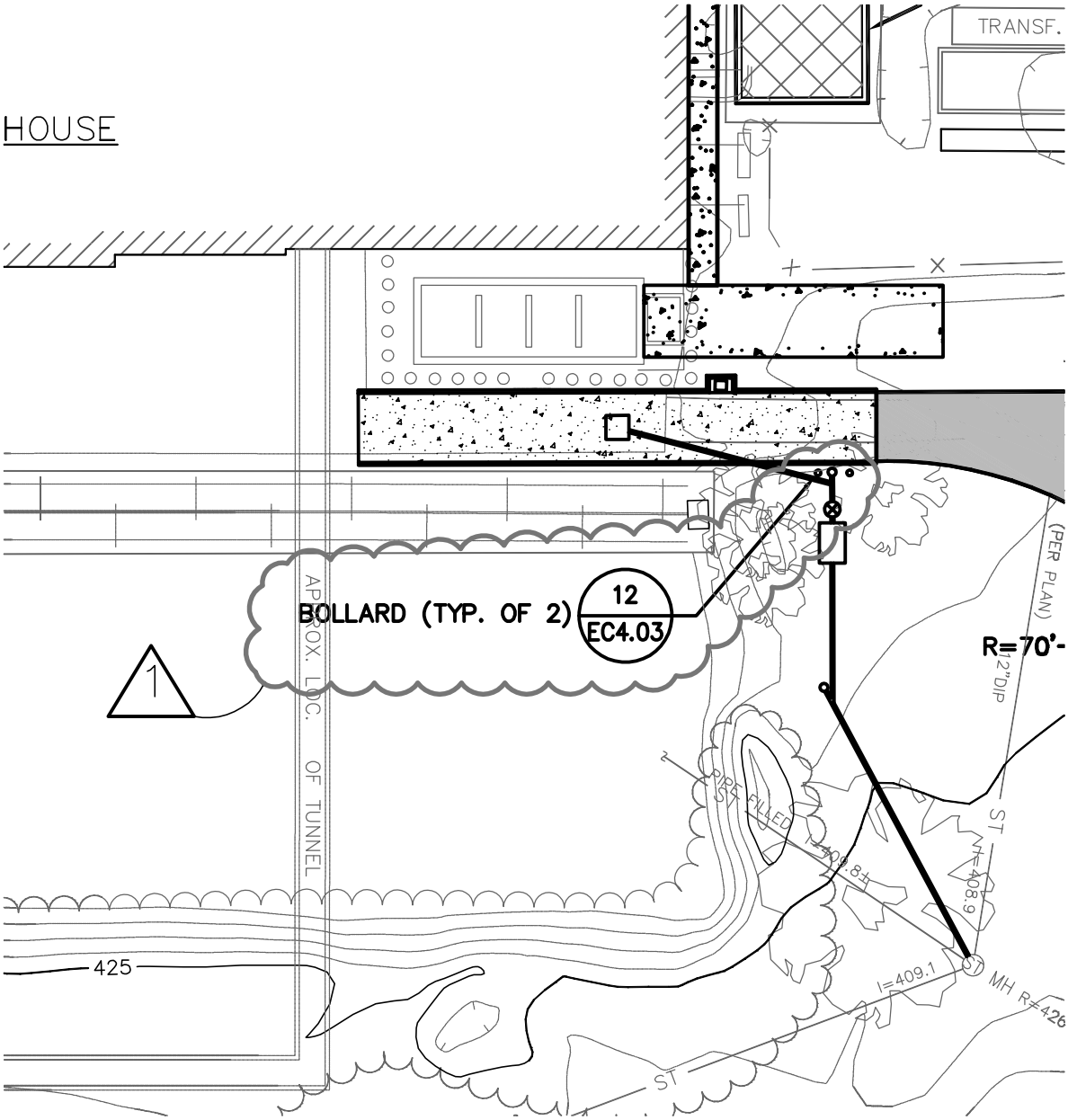

GRAPHIC SCALE

30 15 0 30 60

SCALE: 1" = 30'
UNIT OF MEASURE: FEET

SHEET TITLE: RESTORATION PLAN – AREA 7	NYS Office of General Services, Serving New York, Andrew M. Cuomo, Governor, Roann M. Destito, Commissioner	RMF Engineering, Reliability. Efficiency. Integrity.	
PROJECT: ADDENDUM NO. 2 TO PROJECT NO. 42535-E, GREEN HAVEN CORRECTIONAL FACILITY, STORMVILLE, NY		PROJECT NO: 111109.A0	SCALE: AS SHOWN
		DATE: 02/19/13	DWG NO: SK-EC2.20-1

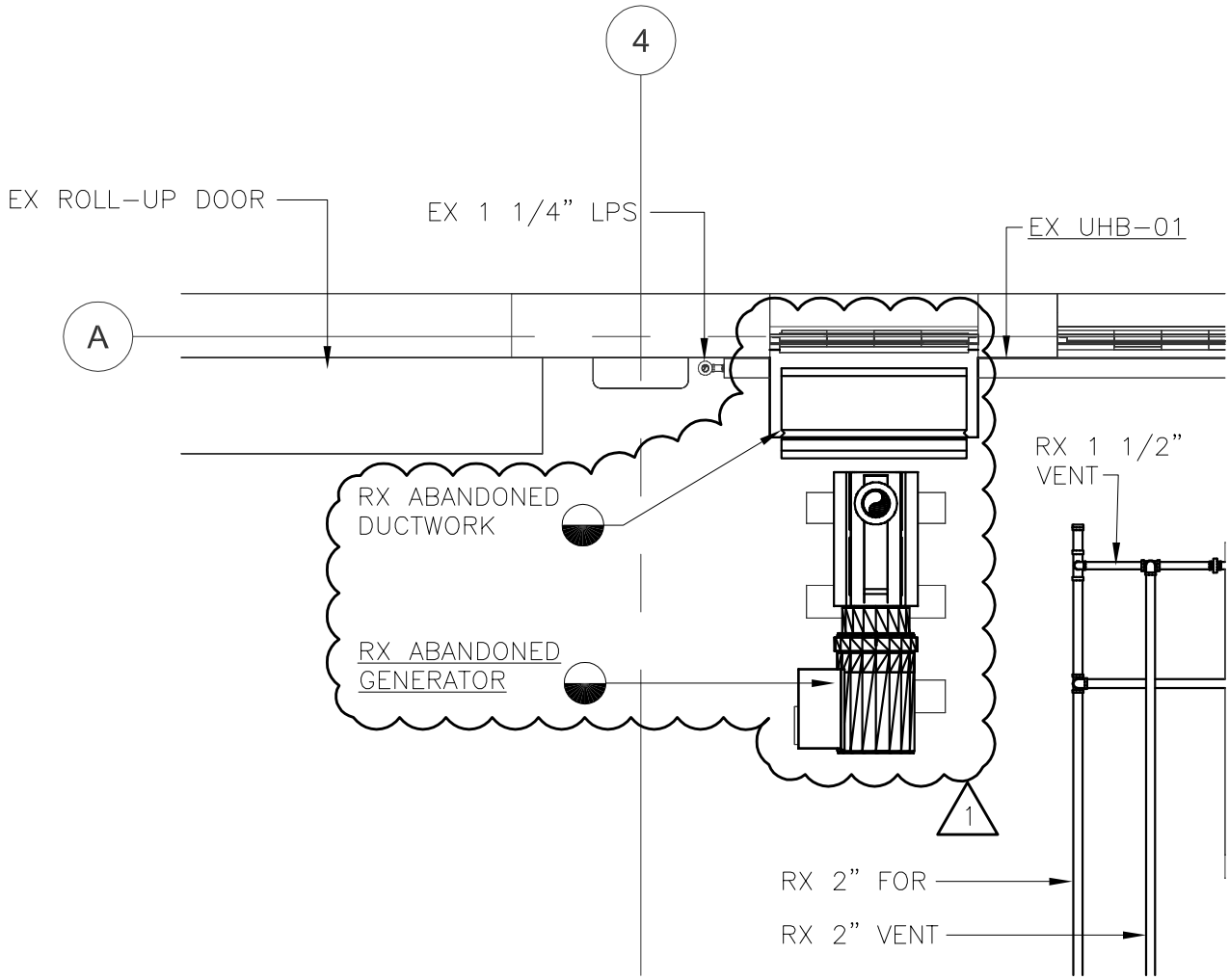

GRAPHIC SCALE

4 2 0 4 8

SCALE: 1/4"=1'-0"
UNIT OF MEASURE: FEET

MARK:	DATE:	DESCRIPTION:
1	02/19/13	ADDENDUM NUMBER 2

SHEET TITLE:
ENGINE ROOM – LOWER LEVEL PLAN – ELEV. 422.5' – REMOVALS – PH 1

PROJECT:

GREEN HAVEN CORRECTIONAL FACILITY
ROUTE 216 STORMVILLE, NEW NORK 12582
OGS PROJECT NO. 42535-E

NYS OFFICE OF GENERAL SERVICES
Serving New York
ANDREW M. CUOMO
Governor
ROANN M. DESTITO
Commissioner

RMF Engineering
Reliability. Efficiency. Integrity.

PROJECT NO:	SCALE:
111109.A0	AS SHOWN
DATE: 02/19/13	DWG NO: SK-EM1.12-1

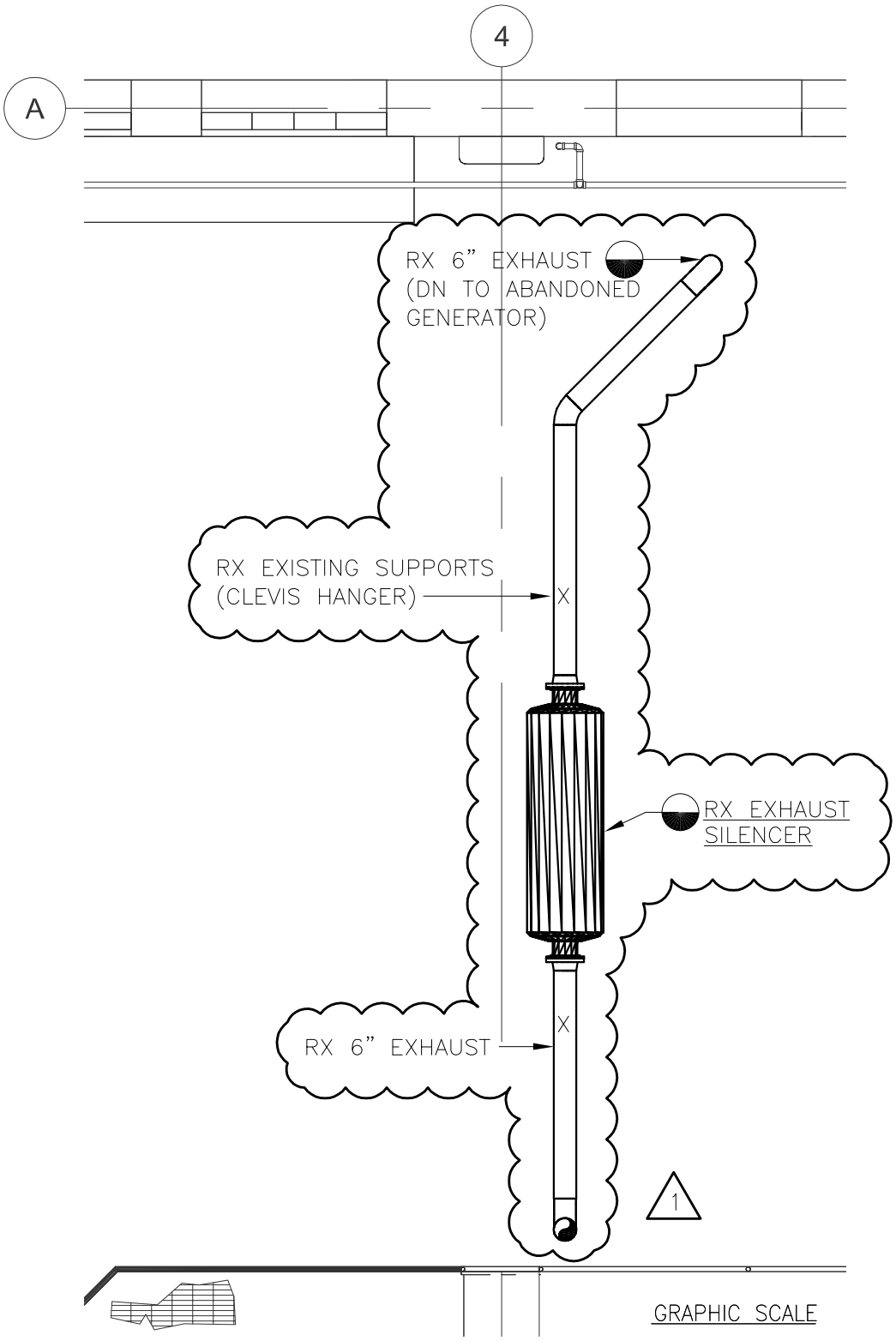

GRAPHIC SCALE

4 2 0 4 8

SCALE: 1/4"=1'-0"
UNIT OF MEASURE: FEET

MARK:	DATE:	DESCRIPTION:
1	02/19/13	ADDENDUM NUMBER 2

SHEET TITLE:
ENGINE ROOM – UPPER LEVEL ELEV. 437.0' – REMOVALS – PH 1

PROJECT:
GREEN HAVEN CORRECTIONAL FACILITY
ROUTE 216 STORMVILLE, NEW NORK 12582
OGS PROJECT NO. 42535-E

NYS OFFICE OF GENERAL SERVICES
Serving New York
ANDREW M. CUOMO
Governor
ROANN M. DESTITO
Commissioner

RMF Engineering
Reliability. Efficiency. Integrity.

PROJECT NO:	SCALE:
111109.A0	AS SHOWN
DATE: 02/19/13	DWG NO: SK-EM1.13-1

DRAWING NOTES:

1. TERMINATE EMERGENCY VENT PIPE 3' ABOVE ROOF LEVEL. PROVIDE EMERGENCY VENT CAP.

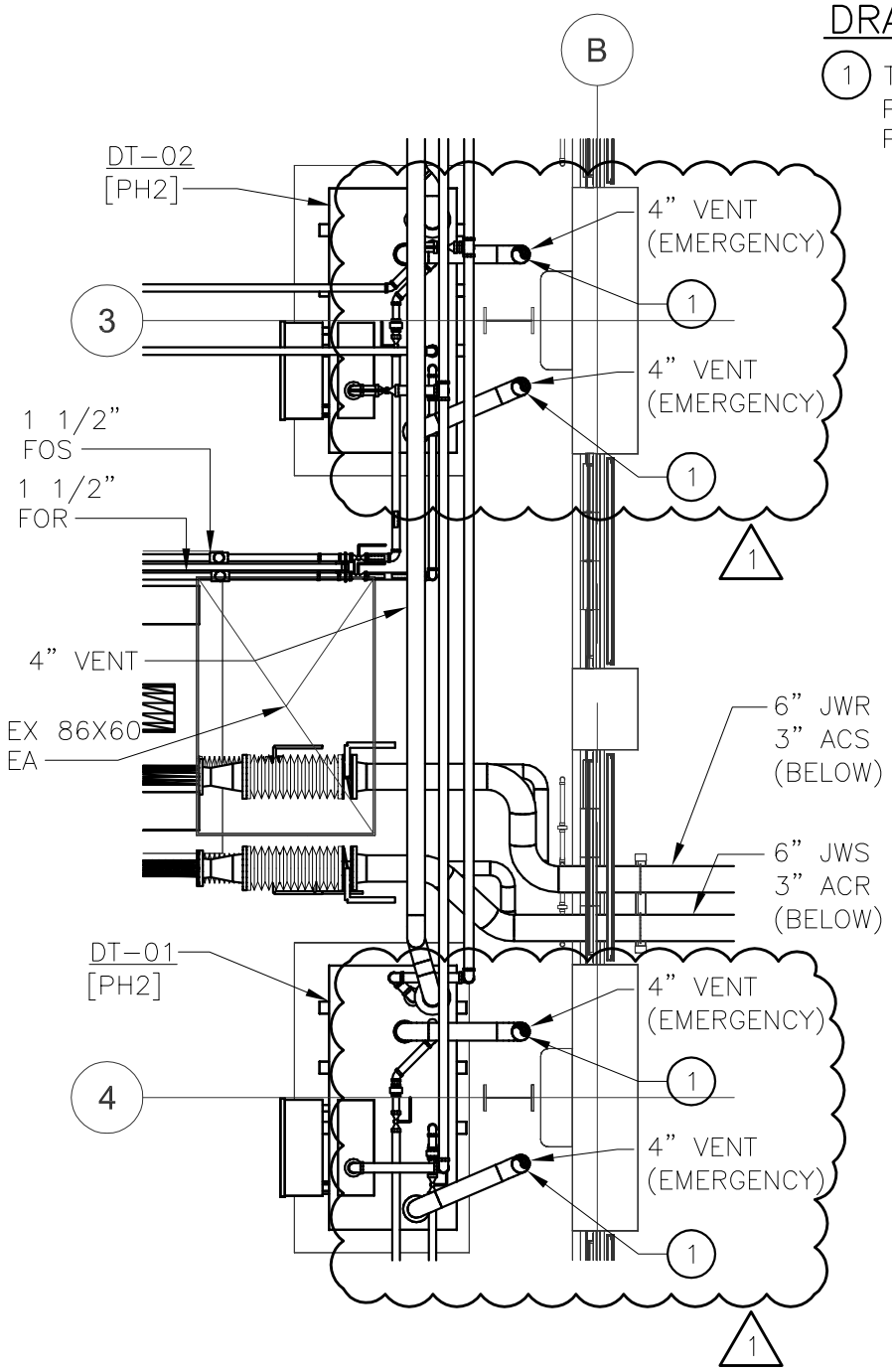

GRAPHIC SCALE

4 2 0 4 8

SCALE: 1/4"=1'-0"
UNIT OF MEASURE: FEET

MARK:	DATE:	DESCRIPTION:
1	02/19/13	ADDENDUM NUMBER 2

SHEET TITLE:
ENGINE ROOM – LOWER LEVEL PLAN – ELEV. 422.5' – NEW WORK – PH 2

PROJECT:

GREEN HAVEN CORRECTIONAL FACILITY
ROUTE 216 STORMVILLE, NEW NORK 12582
OGS PROJECT NO. 42535-E

NYS OFFICE OF GENERAL SERVICES
Serving New York
ANDREW M. CUOMO
Governor
ROANN M. DESTITO
Commissioner

RMF Engineering
Reliability. Efficiency. Integrity.

PROJECT NO:	SCALE:
111109.A0	AS SHOWN
DATE: 02/19/13	DWG NO: SK-EM2.22-1

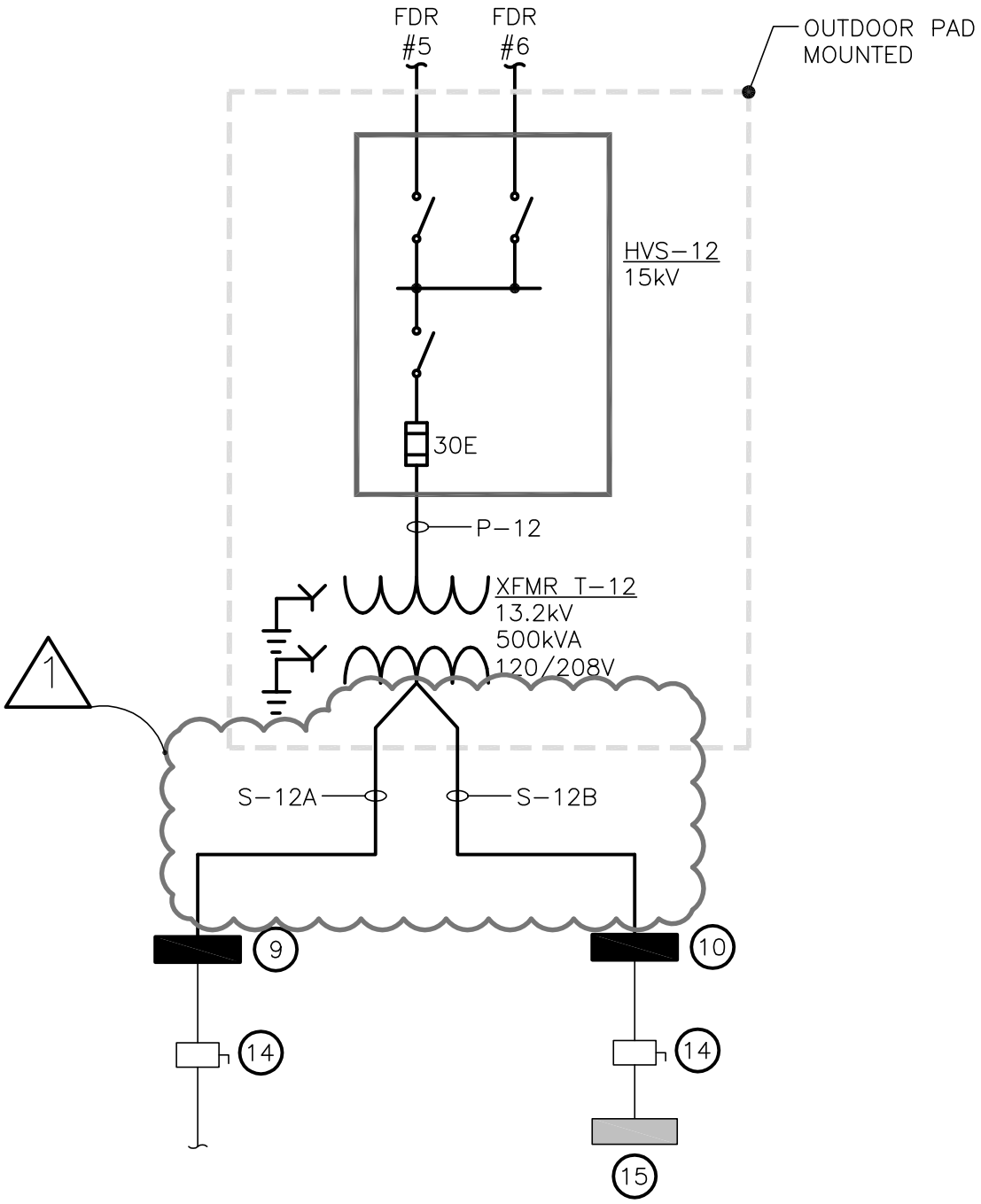

SCALE: NONE

SHEET TITLE:
BUILDING No. 12 SINGLE LINE – NEW WORK

PROJECT:
ADDENDUM NO. 2 TO PROJECT NO. 42535-E
GREEN HAVEN CORRECTIONAL FACILITY
STORMVILLE, NY

NYS OFFICE OF GENERAL SERVICES
Serving New York
ANDREW M. CUOMO
Governor
ROANN M. DESTITO
Commissioner

RMF Engineering
Reliability. Efficiency. Integrity.

PROJECT NO:	SCALE:
111109.A0	AS SHOWN
DATE: 02/19/13	DWG NO: SK-EP2.10B-1

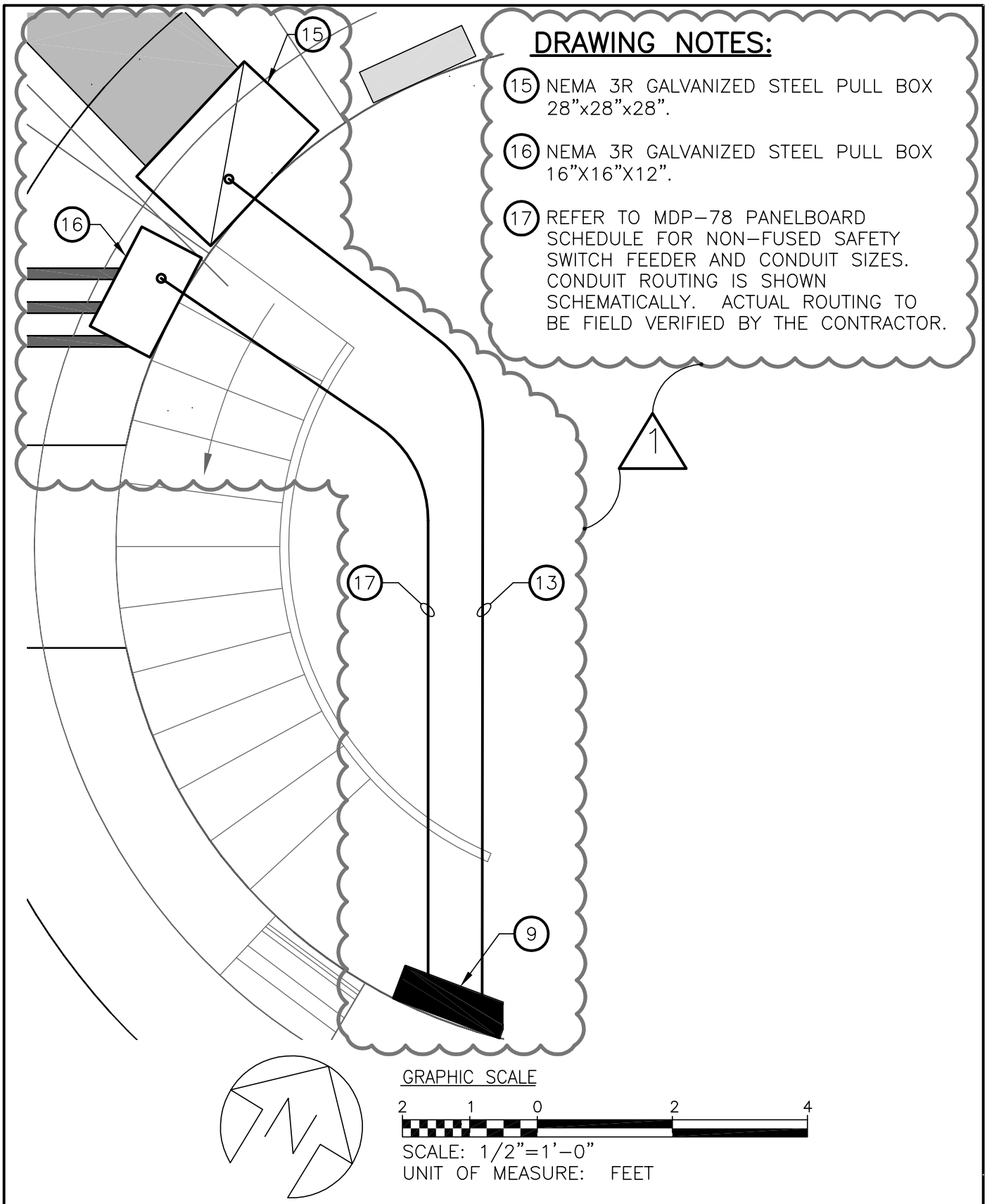

DRAWING NOTES:

15 NEMA 3R GALVANIZED STEEL PULL BOX 28"x28"x28".

16 NEMA 3R GALVANIZED STEEL PULL BOX 16"X16"X12".

17 REFER TO MDP-78 PANELBOARD SCHEDULE FOR NON-FUSED SAFETY SWITCH FEEDER AND CONDUIT SIZES. CONDUIT ROUTING IS SHOWN SCHEMATICALLY. ACTUAL ROUTING TO BE FIELD VERIFIED BY THE CONTRACTOR.

SHEET TITLE:
PART PLAN – GUARD TOWER No. 5 – NEW WORK

PROJECT:
ADDENDUM NO. 2 TO PROJECT NO. 42535-E
GREEN HAVEN CORRECTIONAL FACILITY
STORMVILLE, NY

NYS OFFICE OF GENERAL SERVICES
Serving New York
ANDREW M. CUOMO
Governor
ROANN M. DESTITO
Commissioner

RMF Engineering
Reliability. Efficiency. Integrity.

PROJECT NO:	SCALE:
111109.A0	AS SHOWN
DATE: 02/19/13	DWG NO: SK-EP2.21B-1

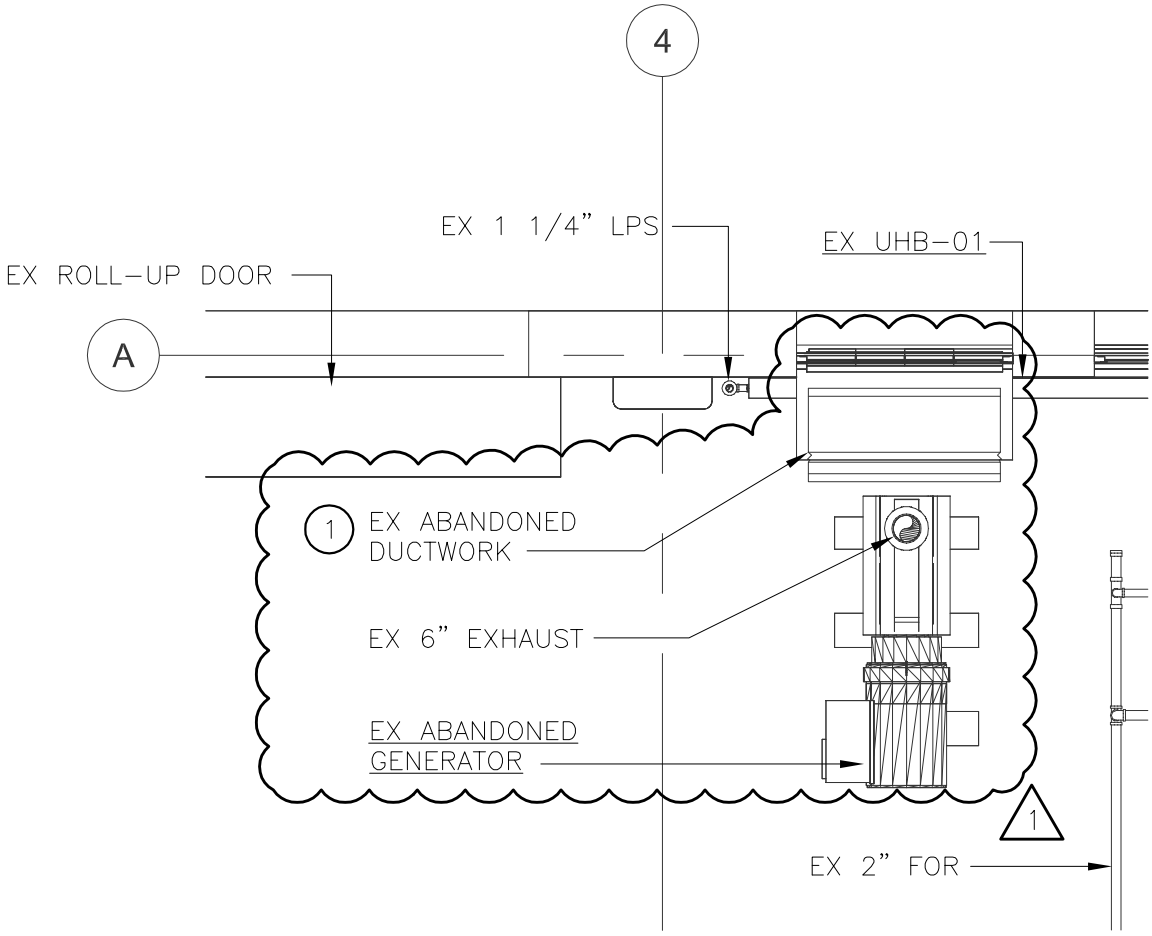

DRAWING NOTES:

1. ABANDONED GENERATOR AND ASSOCIATED DUCTWORK TO BE REMOVED BY 'E' CONTRACTOR, 'H' CONTRACTOR SHALL PROVIDE 20 GA GALVANIZED 4'-0"L x 4'-6"W STEEL BLANK OFF PANEL WITH STIFFENING ANGLES TO TEMPORARILY ENCLOSE WALL PENETRATION.

GRAPHIC SCALE

4 2 0 4 8

SCALE: 1/4"=1'-0"
UNIT OF MEASURE: FEET

MARK:	DATE:	DESCRIPTION:
1	02/19/13	ADDENDUM NUMBER 2

SHEET TITLE: ENGINE ROOM – LOWER LEVEL PLAN – ELEV. 422.5' – REMOVALS – PH 1

PROJECT:

GREEN HAVEN CORRECTIONAL FACILITY
ROUTE 216 STORMVILLE, NEW NORK 12582
OGS PROJECT NO. 42535-H

NYS OFFICE OF GENERAL SERVICES
Serving New York
ANDREW M. CUOMO
Governor
ROANN M. DESTITO
Commissioner

RMF Engineering
Reliability. Efficiency. Integrity.

PROJECT NO:	SCALE:
111109.A0	AS SHOWN
DATE: 02/19/13	DWG NO: SK-M1.12-1

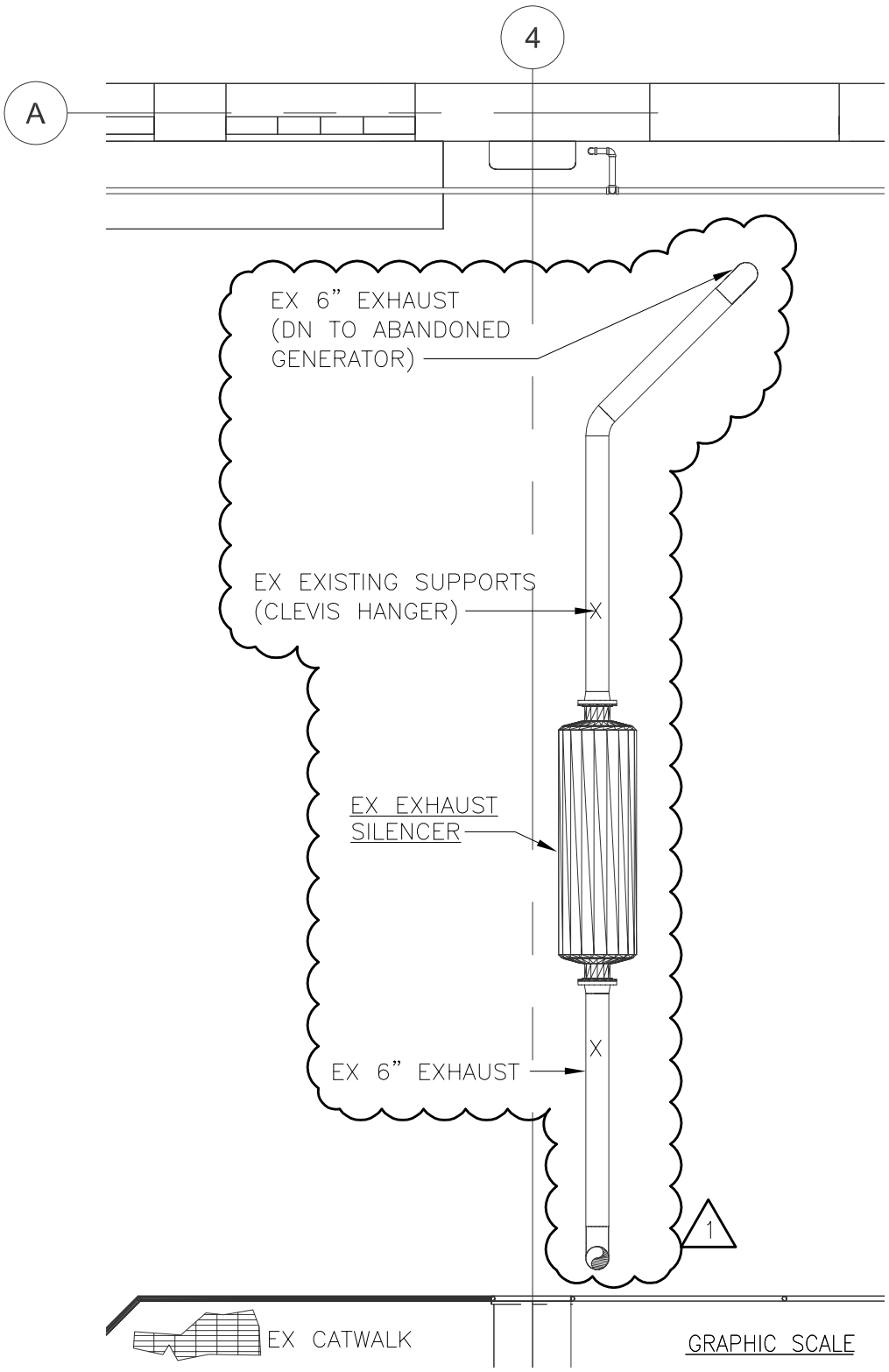

GRAPHIC SCALE

4 2 0 4 8

SCALE: 1/4"=1'-0"
UNIT OF MEASURE: FEET

MARK:	DATE:	DESCRIPTION:
1	02/19/13	ADDENDUM NUMBER 2

SHEET TITLE:
ENGINE ROOM – UPPER LEVEL ELEV. 437.0' – REMOVALS – PH 1

PROJECT:
GREEN HAVEN CORRECTIONAL FACILITY
ROUTE 216 STORMVILLE, NEW NORK 12582
OGS PROJECT NO. 42535-H

NYS OFFICE OF GENERAL SERVICES
Serving New York
ANDREW M. CUOMO
Governor
ROANN M. DESTITO
Commissioner

RMF Engineering
Reliability. Efficiency. Integrity.

PROJECT NO:	SCALE:
111109.A0	AS SHOWN
DATE: 02/19/13	DWG NO: SK-M1.13-1