STATE OF NEW YORK OFFICE OF
GENERAL SERVICES DESIGN AND
CONSTRUCTION GROUP
THE GOVERNOR NELSON A. ROCKEFELLER
EMPIRE STATE PLAZA
ALBANY, NY 12242

**ADDENDUM NO. 3 TO PROJECT NO. 42535**

**CONSTRUCTION WORK, HVAC WORK, ELECTRICAL WORK**

**PROVIDE ELECTRIC UPGRADE FOR FEEDERS, TRANSFORMERS, AND SWITCHGEAR SITEWIDE**

**GREENHAVEN CORRECTIONAL FACILITY**
**ROUTE 216**
**STORMVILLE, N.Y. 12582**

February 25, 2013

**NOTE**: This Addendum forms a part of the Contract Documents. Insert it in the Project Manual. Acknowledge receipt of this Addendum in the space provided on the Bid Form.

## CONSTRUCTION, HVAC, AND ELECTRICAL WORK SPECIFICATION GROUP

1. SECTION 015000 – CONSTRUCTION FACILITIES & TEMPORARY CONTROLS: Revised contractor responsibilities for temporary generator and transformer use (Paragraph 1.04). Refer to attached revised Specification Section.

## HVAC WORK SPECIFICATION GROUP

1. SECTION 230719 –INSULATION: The following revisions were made. Refer to the attached revised Specification Section:
   a Added Exhaust ductwork insulation requirements (Paragraph 3.17).

## ELECTRICAL WORK SPECIFICATION GROUP

1. SECTION 099103 – MECHANICAL PAINTING: Remove Paragraph 3.03(C)(1)(d). Add the following to the end of Paragraph 3.03(C)(1)(b), "except when specified to be galvanized".

2. SECTION 230700 – MECHANICAL INSULATION: The following revisions were made. Refer to the attached revised Specification Section:
   a Added Exhaust, Diesel Engine piping insulation requirements. (Paragraph 2.03).
   b. Added insulation finish group "AL" (Paragraph 2.06).
   c. Revised aluminum jacket insulation finish thickness and surface type requirements. (Paragraph 2.08).

3. SECTION 231220 – PACKAGED FUEL OIL PUMPING SYSTEMS: Refer to the attached "BPCV-13011 ISA Sheet". Add the following to Paragraph 2.03:

"E. Backpressure Control Valve (BPCV-13011)

1. Provide remotely mounted backpressure control valve meeting requirements specified by the attached ISA data sheet. Valve shall be mounted in the field near DT-01 per Drawing EM5.02."

4. SECTION 260513 – PRIMARY WIRING - 15KV NOMINAL: Revise paragraph 3.01(C) to: "Arc Proofing: Arc proof feeders installed in a pullbox, manhole, or cable tray as follows:"

5. SECTION 261219 – TRANSFORMERS – PAD MOUNTED: Delete the following paragraphs:
   a. Paragraph 2.02: THREE PASE COMPARTMENTAL PAD MOUNTED TRANSFORMERS WITH INTEGRATED LOW VOLTAGE SECONDARY DISTRIBUTION SECTION
   b. Paragraph 2.04: SINGLE PHASE FLIP TOP HOOD PAD MOUNTED TRANSFORMERS

6. SECTION 261313 – METAL-CLAD SWITCHGEAR:
   a. Revise paragraph 3.02 (E) to: "Protective Relay Settings: Complete implementation of all system protective relay settings in accordance with utility company approved report furnished by Director's Representative. Test all settings."

7. SECTION 263215 – DIESEL-ALTERNATOR EMERGENCY SYSTEM: The following revisions were made. Refer to the attached revised Specification Section:
   a Added radiator performance data. (Paragraph 2.05 (D) & (E))
   b. Added expansion tank requirements. (Paragraph 2.05 (H))
   c. Revised diesel fuel requirements stated in Paragraph 3.04 (E).

**CONSTRUCTION WORK DRAWINGS**

1. Drawing H1.10:
   a. Revise Drawing Note No. 1 to: "REMOVE EXISTING 625KVA STEAM POWERED GENERATOR UNIT. THE WEIGHT OF THE EXISTING UNIT IS UNKNOWN."

**HVAC WORK DRAWINGS**

1. Drawing M3.03:
   a. DELETE detail bubble in drawing quadrant B7 which refers to detail 23 on Drawing 6.07. The detail and drawing do not exist.

**ELECTRICAL WORK DRAWINGS**

1. Drawing EC2.07:
   a. Revise the "UTILITY SITE PLAN – AREA 7". See accompanying sketch SK-EC2.07-2.

2. Drawing EC3.07
   a. Revise the "UTILITY SITE PLAN – AREA 7". See accompanying sketch SK-EC3.07-1.

3. Drawing EC4.01:
   a. Revise the "UTILITY DETAILS". See accompanying drawing EC4.01.

4. Drawing EP1.12B:

a. Revise the “ENGINE ROOM – LOWER LEVEL – ELEV. 422.5’ – NEW WORK – PHASE 1”. See accompanying drawing EP1.12B.

5. Drawing EP1.21B:
   a. Revise the “ENGINE ROOM – BASEMENT LEVEL – ELEV. 411.5’ – NEW WORK – PHASE 2”. See accompanying drawing EP1.21B.

6. Drawing EP1.22B:
   a. Revise the “ENGINE ROOM – LOWER LEVEL – ELEV. 422.5’ – NEW WORK – PHASE 2”. See accompanying drawing EP1.22B.

**END OF ADDENDUM**

James Dirolf, P.E.
Director of Design

# SECTION 015000

# CONSTRUCTION FACILITIES & TEMPORARY CONTROLS

## PART 1 GENERAL

### 1.01 RELATED WORK SPECIFIED ELSEWHERE

A. Security: Section 015633.

### 1.02 PROJECT CONDITIONS

A. Provide construction facilities and temporary controls necessary for the Work.

### 1.03 SUBMITTALS

A. Waiver of Submittals: The "Waiver of Certain Submittal Requirements" in Section 013300 does not apply to this Section.

B. Submit to the Director's Representative a complete temporary equipment usage and layout plan that identifies the following critical project items:

1. Letter from Electrical Work Contractor accepting responsibilities listed herein and indicating a full understanding of the equipment provided by DOCCS and required to be provided by the Electrical Work Contractor.
2. DOCCS Generator and Transformer location plan. Include all associated equipment, fuel storage, fuel piping routi ng, conductor routing, and clearance and access requirements.
3. Refueling Location and Procedures
4. Cable Connection Procedures for switching between existing generators.
5. Relay Setting Adjustments for DOCCS Generator and Transformer. Also provide a record of existing relay settings.
6. Single Line Diagram showing existing and temporary equipment and proposed electrical and control connections.
7. Estimated schedule or duration of use of DOCCS temporary equipment from NTP.

### 1.04 TEMPORARY EMERGENCY POWER FACILITIES (ELECTRICAL WORK CONTRACT)

A. The Department of Corrections and Community Services (DOCCS) will provide a 1750 kW trailer mounted temporary diesel generator for use by the Electrical Work Contractor to facilitate phasing. The equipment will be referred to as the "DOCCS Generator" throughout the contract documents.

1. The DOCCS Generator is trailer mounted and will consist of the following equipment:

a. Generator (1750 kW [2,187 kVA], 480/277 V, 60 HZ, 3 Phase)
b. Generator Base Tank (1200 Gallon Capacity, usable)
c. Remote Radiator
d. Auxiliary Power Distribution Panel (Radiator Fans, Fuel Equipment, etc.)
e. Unit Mounted Engine Controller
f. Starting Batteries and Charger
g. Trailer mounted 3000A output breaker
h. Electrical cabling and feeders between generator and transformer.

2. Trailer Dimensions (48 Feet Long by 8.5 Feet wide by 13 Feet overall ride height).
3. DOCCS will transport, set-up, operate, fuel and refuel, and service the DOCCS Generator and all of its auxiliaries as listed above during the duration of its use with this contract.
4. The temporary location of the DOCCS Generator will be determined by DOCCSand shall be approved by the Director's Representative. The contractor shall take care to protect the temporary equipment in order to mitigate potential damage during construction activities related to this contract.
5. The DOCCS Generator will be connected to the DOCCS Transformer by DOCCS personnel.

B. The DOCCS will provide a 2500 kVA trailer mounted temporary electrical unit substation transformer for use by the Electrical Work Contractor to facilitate phasing. The equipment will be referred to as the "DOCCS Transformer" throughout the contract documents.

1. The DOCCS Transformer is trailer mounted and will consist of the following equipment:
   a. Unit Substation Transformer (2500 kVA, 480 V to 2.4kV)
   b. 15kV, 1200A, 500MVA Vacuum Circuit Breaker Unit
   c. Dead Front, Multi-Voltage, Output Board
   d. Associated Metering and Protection Devices
2. Trailer Dimensions (48 Feet Long by 8.5 Feet wide by 13 Feet overall ride height).
3. DOCCS will transport, set-up, operate, and service the DOCCS Transformer and all of its auxiliaries as listed above during the duration of its use with this contract.
4. The temporary location of the DOCCS Transformer will be determined by DOCCSand shall be approved by the Director's Representative. The contractor shall take care to protect the temporary equipment in order to mitigate potential damage during construction activities related to this contract.
5. The contractor shall connect the DOCCS Transformer to the existing 2.4kV paralleling switchgear in place of Diesel Generator No. 1 or No. 2 as required to complete the Work specified. The contractor shall adjust the relay settings of the existing generator control relays, located in the existing 2.4kV paralleling switchgear, per the contract documents.

C. The following temporary equipment and accessories shall be provided by the Electrical Work Contractor:

1. Temporary Electrical Feed to DOCCS Generator (208V/60 Hz/ 3 Phase) for Battery Power Management
2. All conductors and cabling not already provided DOCCS but necessary to connect the DOCCS Generator, DOCCS Transformer, and their auxiliaries to the existing emergency power system to provide a complete and operational system.

D. Connect all temporary items and commission their operation before proceeding with taking generators out of service. The DOCCS generator shall be connected to the existing 2.4kV Paralleling switchgear in place of Diesel Generator No. 1 or No. 2 per as required to complete the Work specified. The contractor shall adjust the associated relay settings per the contract documents.

E. Fuel for the DOCCS Generator will not be available from the existing or new fuel oil supply system installed with this contract. Temporary piping is identified for supply of fuel to Existing Diesel Generator No. 1 only.

## 1.05 TEMPORARY LIGHT AND POWER

A. Electric energy will be made available without charge, at source or sources directed, for lighting and for power tools. Power supply for motors rated in excess of 1/2 hp will be made available within the limits of the existing circuitry and usage.

B. Provide temporary lighting as required to maintain a minimum of 10 foot candles in the work areas.

C. Provide ground-fault protection for personnel (such as portable plug-in type ground-fault circuit-interrupters) on single phase 15 and 20 ampere receptacle outlets which are in use.

D. Receptacle outlets and portable cord connectors shall have standard NEMA configuration.

E. Provide temporary wiring and equipment in conformance with the National Electrical Code.

## 1.06 TEMPORARY WATER

A. Water will be made available for the Work without charge at source or sources directed within the limits of the existing supply and usage.

B. Prevent waste of water.

## 1.07 TEMPORARY TOILETS

A. Provide temporary toilet facilities for Contractor’s and subcontractors employees engaged on the project. Locate toilets where directed and maintain them in a sanitary condition.

| NUMBER OF EMPLOYEES | MINIMUM NUMBER OF FACILITIES* |
|---|---|
| 20 or less | 1 toilet |
| 20 or more | 1 toilet and 1 urinal per 40 employees |
| 200 or more | 1 toilet and 1 urinal per 50 employees |

*Toilet/Urinal combinations shall count as only one facility.

1. Where water and sewer connections are available, provide water closets, otherwise provide approved chemical or electric toilets.
2. Inside buildings, locate toilet facilities no more than 4 stories or 60 feet above or below, nor more than 500 feet travel on the same level from the work location of any person.
3. Locate toilet facilities no more than 1000 feet from any work location.
   a. Exception: Mobile crews having readily available transportation to nearby toilet facilities.

## 1.08 BARRIERS AND ENCLOSURES

A. Provide barriers during performance of the Work to:
   1. Prevent unauthorized entry to work areas.
   2. Allow for State's occupancy of Site.
   3. Protect existing facilities and adjacent properties from damage.
   4. Protect vehicular and pedestrian traffic.

B. Temporary Partitions: Provide temporary partitions to form fire resistive barriers between work areas and areas occupied by State personnel. Construct the partitions of 3-5/8 inch width steel framing or 2 x 4 wood framing, with 5/8 inch thick Type X (ASTM C 36) gypsum board on both sides of partition. Secure the partitions in place without damaging existing construction. Seal joints on the State occupied side with joint tape and compound. Provide 1-3/4 inch thick solid core flush wood doors or 18 gage flush steel doors, and steel door frames. Equip doors with full mortise hinges and lockset. Furnish the Director's Representative with 2 keys for each lock.

C. Temporary Dust Barriers: Provide temporary dust barriers to prevent the spread of dust from the work areas. Construct the dust barriers of wood framing sheathed with 6 mil polyethylene film. Secure the dust barriers in place without damaging existing construction.

## 1.09 PROTECTION OF WORK AND EXISTING PROPERTY

A. Protect installed Work and existing construction and finishes during performance of the Work.

B. Maintain the building in a watertight condition during performance of the Work.

C. Provide temporary and removable protection for installed products. Control activity in immediate work area to prevent damage.

D. Provide protective coverings at wall projections, jambs, sills, and soffits of openings.

E. Protect finished floors, stairs, and other surfaces from traffic, dirt, wear, damage, and movement of heavy objects by covering them with durable sheet materials.

F. Protect smoke detectors from airborne dust and debris.
   1. At the beginning of each work day, provide protective coverings over smoke detectors in areas where airborne dust and debris will be generated by the Work.
   2. At the end of the work day, clean the areas in which the smoke detectors are located by whatever means necessary to assure that airborne dust and debris will not contaminate the smoke detectors, then remove protective coverings.
   3. Provide signs, instructions and alternate methods for reporting a fire during the periods that the smoke detectors are covered.
   4. Notify the Director's Representative and have procedures approved.

G. Prohibit traffic or storage upon waterproofed and roofed surfaces. If traffic or activity is necessary, obtain recommendations for protection from waterproofing or roofing material manufacturer.

H. Protect existing trees and plants during performance of the Work unless otherwise indicated. Box trees and plants within the grading limit lines. Do not deposit excavated materials or store building materials around trees or plants. Do not attach guy wires to trees.

I. Prohibit traffic from landscaped areas.

## 1.10 WATER CONTROLS

A. Provide and maintain pumping equipment necessary to keep the work areas free from water. Discharge water into existing storm drainage systems or otherwise disperse as directed.

## 1.11 FIRE PREVENTION

A. Take precautions necessary to prevent fires.

B. Fuel for cutting and heating torches shall be gas only, and shall be contained in Underwriters Laboratory approved containers.

C. Furnish and maintain a currently inspected 20 pound capacity multi-class A B C fire extinguisher in the immediate vicinity where welding tools or torches are in use.

D. Furnish and maintain a currently inspected fire extinguisher of the appropriate class and size whenever the temporary storage of materials changes that areas classification of fire load or life safety.

E. Do not use flammable liquids, other than those specified, within a building without written approval from the Director's Representative.

F. Tarpaulins shall be flameproof and shall be securely anchored when attached to scaffolding or when used to enclose any portion of a building.

## 1.12 ACCESS ROADS

A. Routes of ingress and egress on the premises to the location of the Work shall be as directed.

B. Keep designated access roads clear of dirt and debris resulting from the Work.

C. Provide means of removing mud from vehicle wheels before entering paved roads.

## 1.13 PARKING

A. Parking areas shall be where designated by the Director's Representative.
   1. Keep designated parking areas clear of dirt and debris resulting from the Work.
   2. If requested, register vehicles which are to be parked at the Facility with the Facility Safety/Security Department.
   3. Remove ignition key from unattended vehicles and lock doors.

B. No parking will be allowed at the site, except for vehicles delivering material and equipment while they are being unloaded.

## 1.14 RUBBISH REMOVAL

A. Clean up and containerize the rubbish (refuse, debris, waste materials, and removed materials and equipment) resulting from the Work at the end of each work day and leave work areas broom clean, except where more stringent cleaning is specified. Locate containerized rubbish where directed.

B. Remove rubbish from State property at least once a week and more often if the rubbish presents a hazard. Properly dispose of rubbish.

C. Burning of rubbish will not be permitted.

## 1.15 RELOCATION AND REMOVALS

A. Should a change in location of any construction facilities and temporary controls be necessary in order to progress the Work properly, remove and relocate such items as directed.

B. Remove the construction facilities and temporary controls when they are no longer required. Restore permanent facilities used for or connected to temporary facilities to their original condition or better.

# PART 2 PRODUCTS (NOT USED)

# PART 3 EXECUTION (NOT USED)

**END OF SECTION**

# SECTION 230719

# INSULATION

## PART 1 GENERAL

### 1.01 RELATED WORK SPECIFIED ELSEWHERE

A. Mechanical Painting: Section 099103.

B. Duct and Equipment Identification: Section 230554.

C. HVAC Piping: Section 232000.

D. Metal Ductwork: Section 233113.

E. Centrifugal Fans: Section 233416.

F. Fan Coil Units: Section 238219.

### 1.02 ABBREVIATIONS

A. FS: Federal Specification.

B. K: Thermal Conductivity, i.e., maximum Btu per inch thickness per hour per square foot.

C. pcf: Pounds per cubic foot.

D. PVC: Polyvinylchloride.

### 1.03 SUBMITTALS

A. Product Data:
   1. Manufacturer's catalog sheets, specifications and installation instructions for insulation materials and jacket materials.
   2. Materials Schedule: Itemize insulation materials and thicknesses for each specified application in Insulation Material Schedules in Part 3 of this Section. Where optional materials are specified, indicate option selected.

B. Quality Control Submittals:
   1. Installers Qualification Data:
      a. Name of each person who will be performing the Work, and their employer's name, business address and telephone number.
      b. Furnish names and addresses of the required number of similar projects that each person has worked on which meet the qualifications.

### 1.04 QUALITY ASSURANCE

A. Qualifications: The persons installing the Work of this Section and their Supervisor shall be personally experienced in mechanical insulation work and shall have been regularly employed by a company installing mechanical insulation for a minimum of 5 years.

B. Regulatory Requirements:
   1. Insulation installed inside buildings, including duct lining materials, laminated jackets, mastics, sealants and adhesives shall have a Fire Spread/Smoke Developed Rating of 25/50 or less based on ASTM E 84.

## PART 2 PRODUCTS

### 2.01 INSULATION

A. Fibrous Glass (Mineral Fiber) Insulation: Composed principally of fibers manufactured from rock, slag, or glass, with or without binders, and asbestos free.
   1. Preformed Pipe Insulation: Minimum density 3 pcf; ASTM C 547:
      a. Class 1 (Suitable for Temperatures Up to 450 degrees F): K of 0.26 at 75 degrees F.
   2. Premolded Fitting Insulation: Minimum density 4.0 pcf, K of 0.26 at 75 degrees F; ASTM C 547, Class 1.
   3. Insulation Inserts for PVC Fitting Jackets: Minimum density 1.5 pcf, K of 0.28 at 75 degrees F; ASTM C 553, Type III.
      a. Suitable for temperatures up to 450 degrees F.
   4. Block or Board Insulation: Minimum density 3.0 pcf and 6.0 pcf as specified; ASTM C 612:
      a. Type IA or IB (Suitable for Temperatures Up to 450 degrees F): K of 0.26 at 75 degrees F.

B. Flexible Elastomeric Foam Insulation:
   1. FM tested and approved, meeting the following:
      a. Maximum Water Vapor Transmission: 0.10 perm - inch based on ASTM E 96, Procedure A.
      b. K of 0.27 at 75 degrees F based on ASTM C 518 or C 177.
      c. Fire Spread/Smoke Developed Rating: 25/50 or less based on ASTM E 84.
   2. Pipe Insulation: ASTM C 534, Type I.
   3. Polyethylene and polyolefin insulation is not acceptable.

C. High Density Jacketed Insulation Inserts for Hangers and Supports:
   1. For Use with Fibrous Glass Insulation:
      a. Cold Service Piping:
         1) Polyurethane Foam: Minimum density 4 pcf, K of 0.13 at 75 degrees F, minimum compressive strength of 125 psi.
      b. Hot Service Piping:
         1) Calcium Silicate: Minimum density 15 pcf, K of 0.50 at 300 degrees F; ASTM C 533.

2) Perlite: Minimum density 12 pcf, K of 0.60 at 300 degrees F; ASTM C 610.

c. Ductwork: Fibrous glass board, minimum density 6 pcf, K of 0.26 at 75 degrees F, conforming to ASTM C 612, Type IA or IB.

2. For Use with Flexible Elastomeric Foam Insulation:

a. Piping: Hardwood dowels and blocks, length or thickness equal to insulation thickness, other dimensions as specified or required.

D. Cements:

1. Fibrous Glass Thermal Insulating Cement: Asbestos free; ASTM C 195.
2. Fibrous Glass Hydraulic Setting Thermal Insulating and Finishing Cement: ASTM C 449/C 449M.

## 2.02 JACKETS

A. Laminated Vapor Barrier Jackets for Piping and Ductwork: Factory applied by insulation manufacturer, conforming to ASTM C 1136, Types I and II.

1. Type I: Reinforced white kraft and aluminum foil laminate with kraft facing out.

a. Pipe Jackets: Furnished with integral 1-1/2 inch self sealing longitudinal lap, and separate 3 inch wide adhesive backed butt strips.

2. Type II: Reinforced aluminum foil and kraft laminate with foil facing out.
3. Laminated vapor barrier jackets are not required for flexible elastomeric foam insulation.

B. Canvas Jackets: Cotton duck, fire retardant, complying with NFPA 701, 4 oz or 6 oz per sq yd as specified.

C. Premolded PVC Fitting Jackets:

1. Constructed of high impact, UV resistant PVC.

a. ASTM D 1784, Class 14253-C.

b. Working Temperature: 0-150 degrees F.

D. Metal Jacketing:

1. Aluminum: ASTM B 209, Alloys 1100, 30003, 3105 or 5005, Temper H14, 0.016 inch thick.

a. Roll Jacketing: Smooth outer finish with integral bonded laminated polyethylene film - kraft paper moisture barrier underside.

c. Sheet Jacketing: Corrugated 1-1/4 inch x 1/4 inch deep with integral bonded laminated polyethylene film - kraft paper moisture barrier underside.

d. Fastening Devices:

1) Strapping: Type 18-8 stainless steel, 0.020 inch thick, 1/2 and 3/4 inch wide as specified.

2) Wing Seals: Type 18-8 stainless steel, 0.032 inch thick.

3) Sheet Metal Screws: Panhead, Type A, hardened aluminum, and stainless steel.

## 2.03 ADHESIVES, MASTICS, AND SEALERS

A. Lagging Adhesive (Canvas Jackets): Childers' CP-50A, Epolux's Cadalag 336, Foster's 30-36.

B. Vapor Seal Adhesive (Fibrous Glass Insulation): Childers' CP-82, Epolux's Cadoprene 400, Foster's 85-75 or 85-20.

C. Vapor Barrier Mastic/Joint Sealer (Fibrous Glass Insulation): Childers' CP-30, Epolux's Cadalar 670, Foster's 95-44 or 30-35.

D. Adhesive (Flexible Elastomeric Foam): Armstrong's 520, Childers' CP-80, Epolux's Cadoprene 488, Foster's 82-40.

E. Adhesive (Reinforcing Membrane): Childers' Chil-Spray WB CP-56.

F. Mastic (Reinforcing Membrane): Childers' AK-CRYL CP-9.

G. Sealant (Metal Pipe Jacket): One-part silicone sealant for high temperatures; Dow Corning's Silastic 736 RTV or General Electric's RTV 106.

## 2.04 MISCELLANEOUS MATERIALS

A. Insulation Fasteners for Ductwork and Equipment:
   1. Acceptable Manufacturers: Duro-Dyne Corp.; Erico Fastening Systems, Inc.
   2. Type: Weld pins, complete with self-locking insulation retaining washers.

B. Pressure Sensitive Tape for Sealing Laminated Jackets:
   1. Acceptable Manufacturers: Alpha Associates, Childers, Ideal Tape, Morgan Adhesive.
   2. Type: Same construction as jacket.

C. Wire, Bands, and Wire Mesh:
   1. Binding and Lacing Wire: Nickel copper alloy or copper clad steel, gage as specified.
   2. Bands: Galvanized steel, 1/2 inch wide x 0.015 inch thick, with 0.032 inch thick galvanized wing seals.
   3. Wire Mesh: Woven 20 gage steel wire with 1 inch hexagonal openings, galvanized after weaving.

D. Metal Corner Angles: Galvanized steel, 2 x 2 inch 28 gage.

E. Reinforcing Membrane: Glass or Polyester, 10 x 10 mesh. Alpha Associates Style 59, Childer's Chil-Glas, Foster's MAST-A-FAB.

# PART 3 EXECUTION

## 3.01 PREPARATION

A. Perform the following before starting insulation Work:
   1. Install hangers, supports and appurtenances in their permanent locations.
   2. Complete testing of piping, ductwork, and equipment.
   3. Clean and dry surfaces to be insulated.

## 3.02 INSTALLATION, GENERAL

A. Install the Work of this Section in accordance with the manufacturer's printed installation instructions unless otherwise specified.

B. Piping Insulation: Provide continuous insulation and jacketing when passing thru interior wall, floor, and ceiling construction.
   1. At Through Penetration Firestops: Coordinate insulation densities with the requirements of approved firestop system being installed. See Section 078400.
      a. Insulation densities required by approved firestop system may vary with the densities specified in this Section. When this occurs use the higher density insulation.

C. Do not intermix different insulation materials on individual runs of piping.

## 3.03 INSTALLATION AT HANGERS AND SUPPORTS

A. Reset and realign hangers and supports if they are displaced while installing insulation.

B. Install high density jacketed insulation inserts at hangers and supports for insulated ductwork, piping, and equipment.

C. Insulation Inserts For Use with Fibrous Glass Insulation:
   1. Ductwork: Install 6 pcf density jacketed fibrous glass board, same thickness as adjoining insulation, sized for full bearing on supporting trapeze member, and as required to enable abutting to adjoining insulation and overlapping of jacketing.
   2. Piping: Where clevis hangers are used, install insulation shields and high density jacketed insulation inserts between shield and pipe.
      a. Where insulation is subject to compression at points over 180 degrees apart, e.g. riser clamps, U-bolts, trapezes, etc.; fully encircle pipe with 2 protection shields and 2 high density jacketed fibrous glass insulation inserts within supporting members.
         1) Exception: Locations where pipe covering protection saddles are specified for hot service piping, 6 inch and larger.

D. Insulation Inserts For Use with Flexible Elastomeric Foam Insulation:
   1. Piping:
      a. Where clevis hangers are used, install insulation shields with hardwood filler pieces, same thickness as adjoining insulation,

inserted in undersized die cut or slotted holes in insulation at support points.

b. Contour hardwood blocks to match the curvature of pipe, and shield.

c. Coat dowels and blocks with insulation adhesive, and insert while still wet.

d. Vapor seal outer surfaces of dowels and blocks with adhesive after insertion.

e. Install filler pieces as follows:

| PIPE/TUBING SIZE | FILLER PIECES | POSITION |
|---|---|---|
| Thru 1-1/2” | 2 dowel plugs | 6 o’clock; in tandem |
| 2” thru 4” | 1 block 2 dowel plugs | 6 o’clock, and 4 & 8 o’clock respectively |
| 6” thru 8” | 2 blocks 4 dowel plugs | 6 o’clock; in tandem and 4 & 8 o’clock; in tandem |
| | | |

## 3.04 INSTALLATION OF FIBROUS GLASS COLD SERVICE INSULATION

A. Install insulation materials with a field or factory applied ASTM C 1136 Type I laminated vapor barrier jacket, unless otherwise specified.

B. Piping:

1. Butt insulation joints together, continuously seal minimum 1-1/2 inch wide self sealing longitudinal jacket laps and 3 inch wide butt adhesive backed strips.
   a. Substitution: 3 inch wide pressure sensitive sealing tape, of same material as jacket, may be used in lieu of butt strips.
2. Bed insulation in a 2 inch wide band of vapor barrier mastic, and vapor seal exposed ends of insulation with vapor barrier mastic at each butt joint between pipe insulation and equipment, fittings or flanges at the following intervals:
   a. Horizontal Pipe Runs: 21 ft.
   b. Vertical Pipe Runs: 9 ft.

C. Fittings, Valves, Flanges and Irregular Surfaces:

1. Insulate with mitre cut or premolded fitting insulation of same material and thickness as pipe insulation.
2. Secure insulation in place with 16 gage wire, with ends twisted and turned down into insulation.
3. Butt insulation against pipe insulation and bond with joint sealer.
4. Insulate valves up to and including bonnets, without interfering with packing nuts.
5. Apply leveling coat of insulating cement to smooth out insulation and cover wiring.
6. When insulating cement has dried, seal fitting, valve and flange insulation, by imbedding a layer of reinforcing membrane or 4 oz. canvas jacket between 2 flood coats of vapor barrier mastic, each 1/8 inch thick wet.

7. Lap reinforcing membrane or canvas on itself and adjoining pipe insulation at least 2 inches.
8. Trowel, brush or rubber glove outside coat over entire insulated surface.
9. Exceptions:
   a. In Mechanical Equipment Rooms, Steam Service Rooms, Machine Rooms, Boiler Rooms, Penthouses, Finished Rooms and Finished Spaces: Cover fittings, valves and flanges insulated with fibrous glass with an additional 6 oz canvas jacket, lapped on adjoining insulation and pasted with lagging adhesive.
   b. Type C and D Piping Systems: Valves, fittings and flanges may be insulated with premolded PVC fitting jackets, with fibrous glass insulation inserts.
      1) Additional insulation inserts are required for services with operating temperatures under 45 degrees F or where insulation thickness exceeds 1-1/2 inches. The surface temperature of PVC fitting jacket must not go below 45 degrees F.

## 3.05 INSTALLATION OF FIBROUS GLASS HOT SERVICE INSULATION

A. Install insulation materials with field or factory applied ASTM C 1136 Type I laminated vapor barrier jacket unless otherwise specified.

B. Canvas Jackets on Piping, Fittings, Valves, Flanges, Unions, and Irregular Surfaces:
   1. For Piping 2 inch Size and Smaller: 4 oz per sq yd unless otherwise specified.
   2. For Piping Over 2 inch Size: 6 oz per sq yd unless otherwise specified.

C. Piping:
   1. Butt insulation joints together, continuously seal minimum 1-1/2 inch wide self sealing longitudinal jacket laps and 3 inch wide adhesive backed butt strips.
      a. Substitution: 3 inch wide pressure sensitive sealing tape, of same material as the jacket, may be used in lieu of butt strips.
   2. Fill voids in insulation at hanger with insulating cement.
   3. Exceptions:
      a. Piping in Accessible Shafts, Attic Spaces, Crawl Spaces, Unfinished Spaces and Concealed Piping: Butt insulation joints together and secure minimum 1-1/2 inch wide longitudinal jacket laps and 3 inch wide butt strips of same material as jacket, with outward clinching staples on maximum 4 inch centers. Fill voids in insulation at hangers with insulating cement.
      b. Piping in Tunnels: Butt insulation joints together and secure minimum 1-1/2 inch wide longitudinal jacket laps and 3 inch wide butt strips, of same material as jacket, with outward clinching staples on maximum 4 inch centers and 16 gage wires a minimum of 4 loops per section. Fill voids in insulation with insulating cement.

D. Fittings, Valves, Flanges and Irregular Surfaces:
   1. Insulate with mitre cut or premolded fitting insulation of same material and thickness as insulation.
   2. Secure in place with 16 gage wire, with ends twisted and turned down into insulation.
   3. Butt fitting, valve and flange insulation against pipe insulation, and fill voids with insulating cement.
   4. Insulate valves up to and including bonnets, without interfering with packing nuts.
   5. Apply leveling coat of insulating cement to smooth out insulation and cover wiring.
   6. After insulating cement has dried, coat insulated surface with lagging adhesive, and apply 4 oz or 6 oz canvas jacket as required by pipe size.
      a. Lap canvas jacket on itself and adjoining pipe insulation at least 2 inches.
      b. Size entire canvas jacket with lagging adhesive.
   7. Exceptions:
      a. In Types E, F and G Service Piping Systems: Valves, fittings and flanges may be insulated with premolded PVC fitting jackets, with fibrous glass insulation inserts.
         1) Additional insulation inserts are required for services with operating temperatures over 250 degrees F or where insulation thickness exceeds 1-1/2 inches. The surface temperature of PVC fitting jacket must not exceed 150 degrees F.
      b. In Types E, F, and G Service Piping Systems: Insulate fittings, valves, and irregular surfaces 3 inch size and smaller with insulating cement covered with 4 oz or 6 oz canvas jacket as required by pipe size.
         1) Terminate pipe insulation adjacent to flanges and unions with insulating cement trowelled down to pipe on a bevel.
      c. Fittings, Valves, Flanges, and Irregular Surfaces In Concealed Piping, Piping in Accessible Shafts, Attic Spaces, Crawl Spaces, Unfinished Rooms, Unfinished Spaces, and Tunnels: Sizing of canvas surface is not required.

E. Equipment:
   1. Secure fibrous glass block or board insulation in place with wire or galvanized steel bands.
      a. Small Areas: Secure insulation with 16 gage wire on maximum 6 inch centers.
      b. Large Areas: Secure insulation with 14 gage wire or .015 inch thick by 1/2 inch wide galvanized steel bands on maximum 10 inch centers. Stagger insulation joints.
      c. Irregular Surfaces: Where application of block or board insulation is not practical, insulate with insulating cement built-up to same thickness as adjoining insulation.
   2. Fill joints, voids and irregular surfaces with insulating cement, to a uniform thickness.

3. Stretch wire mesh over entire insulated surface and secure to anchors, with wire edges laced together.
4. Apply finishing cement, total of 1/2 inch thick, in 1/4 inch thick coats.
   a. Trowel second coat to a smooth hard finish.
5. Neatly bevel insulation around manholes, handholes, cleanouts, ASME stamp, boiler manufacturer's name and catalog number.

## 3.06 INSTALLATION OF FLEXIBLE ELASTOMERIC FOAM INSULATION

A. Where possible, slip insulation over the pipe, and seal butt joints with adhesive.
   1. Where the slip-on technique is not possible, slit the insulation and install.
   2. Re-seal with adhesive, making sure the mating surfaces are completely joined.

B. Insulate fittings and valves with miter cut sections. Use templates provided by the manufacturer, and assemble the cut sections in accordance with the manufacturer's printed instructions.
   1. Insulate threaded fittings and valves with sleeved fitting covers. Over lap and seal the covers to the adjoining pipe insulation with adhesive.

C. Carefully mate and seal with adhesive all contact surfaces to maintain the integrity of the vapor barrier of the system.
   membrane.

## 3.07 INSTALLATION OF DUCTWORK INSULATION

A. Fibrous Glass Board Insulation Application:
   1. Secure insulation to ductwork, with duct insulation fasteners spaced 3 inch in from all corners of ducts, with intermediate fasteners on maximum 16 inch centers in all directions.
   2. Butt edges of insulation and fill voids with similar insulation.
   3. Seal minimum 1-1/2 inch wide longitudinal jacket laps continuously with vapor seal adhesive.
   4. Lap circumferential joints with 4 inch wide jacket material and seal laps continuously with vapor barrier lap adhesive, or seal continuously with minimum 3 inch wide pressure sensitive sealing tape, of same material as jacket.
   5. Install metal corner angles over the jacketed insulated corners. Seal exposed ends of insulation with vapor barrier mastic.
   6. Vapor seal breaks in vapor barrier jacketing, exposed surfaces of duct insulation fasteners and metal corner angles, with pressure sensitive sealing tape of same material as jacket or coat with vapor barrier mastic.
   7. Field apply 6 oz canvas jacket over the vapor barrier jacketed insulation where indicated on Ductwork Service Insulation Material Schedule in Part 3 of this Section.
      a. Apply canvas jacket with lagging adhesive, with a 2 inch lap on circumferential and longitudinal seams.
      b. Outward clinching staples may be utilized for additional securement of canvas to bottom of ducts in excess of 48 inch in width.
      c. Apply heavy coat of lagging adhesive to entire canvas surface.

8. Place trapeze hangers, fabricated of steel rods and structural steel channels or angles, outside of jacketed insulated ducts.
   a. Install high density insulation inserts, of thickness equal to insulation, minimum of 4 inch in width by the bottom dimension of the duct, at points of support.
   b. Continuously jacket insulated ducts and filler pieces through supports.

B. Fibrous Glass Blanket Insulation Application:
1. Cut insulation to stretch-out dimensions as recommended by insulation manufacturer.
2. Remove 2 inch wide strip of insulation material from the jacketing on the longitudinal and circumferential joint edges to form an overlapping staple/tape flap.
3. Install insulation with jacketing outside so staple/tape flap overlaps insulation and jacketing on other end.
4. Butt ends of insulation tightly together.
   a. Rectangular and Square Ductwork: Do not compress insulation at duct corners.
5. Staple longitudinal and circumferential joints with outward clinching staples minimum 6 inches on center, and seal with pressure sensitive sealing tape.
6. Cut off pretruding ends of fasteners flush with insulation surface and seal with pressure sensitive sealing tape.
7. Install duct insulation fasteners on bottom side of horizontal duct runs, when bottom dimension of the duct is in excess of 24 inches in width.
8. Install duct insulation fasteners on sides of duct risers having a dimension over 24 inches in size.
9. Seal tears, punctures, and penetrations of insulation jacketing with sealing tape.
10. Secure insulation to ductwork with fasteners spaced in accordance with the following schedule:

| DUCT DIMENSION | SPACING OF FASTENERS (MINIMUM) |
|---|---|
| Up to 24 inches | None required. |
| 24 inches to 48 inches | Horizontal Runs: 2 rows - 16 inches on center.<br>Risers: 16 inches on center, all directions. |
| 49 inches to 60 inches | Horizontal Runs: 3 rows - 16 inches on center.<br>Risers: 16 inches on center, all directions. |
| 61 inches and over | Horizontal Runs: 16 inches on center, all directions.<br>Risers: 16 inches on center, all directions. |
| | |

C. Bench Insulated Ductwork:
1. Insulate ducts prior to erection in place when ducts are required to be installed proximate to walls, ceilings, equipment or other ductwork, which will not permit adequate space for installation of insulation after ducts are installed.

## 3.08 FIELD QUALITY CONTROL

A. Field Samples: The Director's Representative, may at his discretion, take field samples of installed insulation for the purpose of checking materials and application. Reinsulate sample cut areas.

## 3.09 PIPING AND EQUIPMENT INSULATION SCHEDULE

A. Insulate all cold service and hot service piping, equipment, and appurtenances except where otherwise specified.

B. Schedule of Items Not to be Insulated:
1. Do not insulate the following cold service items:
   a. Actual heat transfer surfaces.
   b. Flexible vibration eliminators.
   c. Refrigerant liquid piping, unless sub-cooled below 70 degrees F.
2. Do not insulate the following hot service piping:
   a. Piping inside convector and finned tube radiation enclosures.
   b. Drains from heating equipment and appurtenances that flow to waste.
   c. Discharge piping from steam safety and water relief valves.
3. Do not insulate the following hot service fittings, valves, flanges and irregular surfaces:
   a. Hydronic Specialties:
      1) Flow indicators.
      2) Zone control valves.
      3) Air vents.
      4) Air control fittings.
   b. Steam traps and cooling legs of steam traps.
   c. Safety and relief valves.
4. Do not insulate the following hot service equipment:
   a. Actual heat transfer surfaces.
   l. ASME stamps, nameplates with manufacturer's name and model number.
5. Do not insulate items installed under other Contracts.
6. Do not insulate mechanical equipment with a factory applied insulated steel jacket.

## 3.10 COLD SERVICE INSULATION MATERIAL SCHEDULE

| TYPE | SERVICE AND TEMPERATURES | INSULATION MATERIAL | PIPE SIZES (INCHES) | MINIMUM (NOMINAL) INSULATION THICKNESS (INCHES) |
|---|---|---|---|---|
| A & B | Refrigerants, Brine, and Fluids below 40 F. | Flex. Elastomeric Foam | 1& less<br>1-1/4 and Up | 1<br>1-1/2 |
| D | Domestic cold water, and as specified. | Flex. Elastomeric Foam or | All Sizes | 1 |

| | | | | |
|---|---|---|---|---|
| | 33 F to 80 F. | Fibrous Glass | | |

A. **NOTES:**

1. Double the insulation thickness above for piping, installed in tunnels and conduits.
2. Equipment Insulation: Insulation thicknesses above also apply for flat, curved and irregular equipment surfaces.
   a. Insulate equipment with fibrous glass board insulation with minimum density 6 pcf.
   b. Exceptions: Minimum insulation thickness for Type A service shall be a minimum of 1 inch thick for flat, curved and equipment irregular surfaces.
3. Type D Insulation Materials: In addition to the services shown on the schedule above, use Type D materials and thicknesses for the following:
   a. Condensate Drain Piping:
      1) Piping connected to drain pans under cooling coils within unit enclosure, except where over drain pans.
      2) Horizontal condensate drain piping outside unit enclosures.
      3) Vertical condensate drain piping of less than one story immediately following horizontal run.

## 3.11 HOT SERVICE INSULATION MATERIAL SCHEDULE

| | SERVICE AND TEMPERATURES | INSULATION MATERIAL | PIPE SIZES (INCHES) | MINIMUM (NOMINAL) INSULATION THICKNESS (INCHES) |
|---|---|---|---|---|
| E | Water and other fluids<br>141 F to 250 F. | Fibrous Glass | 6 & Less<br>8 & Up | 2<br>2-1/2 |
| F | Steam (LPS) to 15 psig | Fibrous Glass | 1-1/2 & Less<br>2 & Up | 1-1/2<br>3 |
| G | Steam (MPS) to 16 to 125 psig | Fibrous Glass | 1 & less<br>1-1/4 to 4<br>5 & Up | 2<br>3<br>3-1/2 |

A. **NOTES:**

1. Insulate piping in tunnels and conduits with insulation of thickness as follows:

a. Types E, F, and G Service: Minimum 2 inch thick unless greater thickness is specified in Hot Service Insulation material Schedule above.

2. Equipment Insulation:
   a. Insulate equipment with fibrous glass board insulation with minimum density 6 pcf.
   b. Minimum thickness for flat, curved and irregular equipment surfaces:
      1) 1-1/2 inch for E and F service.
      2) 3 inch for G service.

## 3.12 SCHEDULE OF METAL JACKETING FOR INSULATED PIPE

A. General:
1. Jacket exposed insulated steam and condensate piping in the Engine Room and Basement with preformed sectional aluminum metal pipe jacketing.
2. Lap longitudinal and circumferential joints a minimum of 2 inches.
3. Secure jacketing in place with 1/2 inch x 0.020 inch thick aluminum bands secured with aluminum wing type seals, on maximum 12 inch centers.
4. Jacketing is not required on valves, flanges, and irregular surfaces.
5. Install jacketing so as to avoid trapping condensation and precipitation.

## 3.13 DUCTWORK SERVICE INSULATION SCHEDULE

A. Insulate all ductwork service except where otherwise specified. Insulate EF-1, 2, and 3.

B. Do not insulate the following ductwork service items:
1. Battery room exhaust ductwork.
2. Flexible ductwork connections.

## 3.17 DUCTWORK SERVICE INSULATION MATERIAL SCHEDULE REVISED 2/21/13

| LOCATION | SERVICE | INSUL. MATERIAL | MINIMUM INSUL. THICKNESS | JACKET TYPE | MINIMUM REQUIRED R VALUE |
|---|---|---|---|---|---|
| Inside building but exposed to outside air temp., e.g., ventilated attic. | Air Conditioning Supply, Heating Supply, All Returns including returns mixed with outside air. | Fibrous Glass Blanket<br>Fibrous Glass Board | 2-1/2<br>2 | I or II<br>I or II | R-8 |
| Inside building but exposed to outside air temp., e.g., ventilated attic. | Generator Exhaust Ventilation Ductwork, EA | Fibrous Glass Board | 2-1/2 | Canvas | R-8 |

A. **NOTES:**

1. Equipment: Insulate air handling equipment, not furnished with factory applied insulated jacket or internal insulation, with minimum 1-1/2 inch thick fibrous glass board with an ASTM C 1136 Type I jacket, installed and finished as specified for exposed ductwork in finished spaces.

**END OF SECTION**

# SECTION 230700

# HVAC INSULATION

## PART 1 - GENERAL

### 1.01 RELATED DOCUMENTS:

A. Contract Drawings and General Provisions of the Contract, including General and Supplementary Conditions and other Division 01 Specification Sections apply to this Section.

B. Requirements of the following Specification Sections apply to this Section:

1. Section 230500 “Common Work Results for HVAC”
2. Section 230511 “Basic HVAC Materials and Methods”
3. Section 230529 “Pipe and Valve Identification”
4. Section 230554 “Duct and Equipment Identification”
5. Section 232105 “HVAC Piping”

### 1.02 DESCRIPTION OF WORK

A. Scope: Extent of the piping system and equipment required to be insulated by this Section is indicated in this Section, on the Contract Drawings, and other Division 23 Sections.

B. Types: Types of mechanical insulation systems specified in this Section include the following:

1. Ductwork insulation.
2. Pipe insulation.
3. Equipment insulation.
4. Insulation jackets.
5. Insulation accessories.

### 1.03 QUALITY ASSURANCE

A. Codes and Standards: Provide insulation conforming to the following standards:

1. American Society for Testing and Materials (ASTM): Manufacture and test insulation in accordance with the ASTM standards, including:

| | | |
|---|---|---|
| a. | ASTM B 209 | Aluminum Alloys |
| b. | ASTM C 177 | Test Method for Steady-State Heat Flux Measurements and Thermal Transmission Properties by Means of the Guarded-Hot-Plate Apparatus. |

| | | |
|---|---|---|
| c. | ASTM C 195 | Mineral Fiber Thermal Insulating Cement. |
| d. | ASTM C 196 | Expanded or Exfoliated Vermiculite Thermal Insulating Cement. |
| e. | ASTM C 302 | Test Method for Density of Preformed Pipe-Covering-Type Thermal Insulation. |
| f. | ASTM C 335 | Test Method for Steady-State Heat Transfer Properties of Horizontal Pipe Insulation. |
| g. | ASTM C 356 | Test Method for Linear Shrinkage of Preformed High-Temperature Thermal Insulation Subjected to Soaking Heat. |
| h. | ASTM C 411 | Test Method for Hot-Surface Performance of High Temperature Thermal Insulation. |
| i. | ASTM C 449 | Mineral Fiber Hydraulic - Setting Thermal Insulating and Finishing Cement. |
| j. | ASTM C 534 | Preformed Flexible Elastomeric Cellular Thermal Insulation in Sheet and Tubular Form. |
| k. | ASTM C 547 | Mineral Fiber Preformed Pipe Insulation. |
| l. | ASTM C 553 | Mineral Fiber Blanket Thermal Insulation for Commercial and Industrial Applications. |
| m. | ASTM C 612 | Mineral fiber Block and Board Thermal Insulation |
| n. | ASTM C 795 | Thermal Insulation for Use in Contact with Austenitic Stainless Steel. |
| o. | ASTM C 921 | Practice for Determining Properties of Jacketing Materials for Thermal Insulation. |
| p. | ASTM D 579 | Greige Woven Glass Fabrics. |
| q. | ASTM E 84 | Test Method for Surface Burning Characteristics of Building Materials. |
| r. | ASTM C591 | Pre-Formed Polyeurethane Pipe Insulation |

2. National Fire Protection Association (NFPA): Manufacture insulation in accordance with the following NFPA standards:

| | | |
|---|---|---|
| a. | NFPA 25 | Test Methods, Surface Burning Characteristics of Building Materials. |

3. Underwriter's Laboratory Inc.

| | | |
|---|---|---|
| a. | UL 723 | Tests for Surface Burning Characteristics of Building Materials. |

B. Do not provide materials with flameproofing treatments subject to deterioration due to the effects of moisture or high humidity, where applicable.

C. Flame/Smoke Rating: Provide composite mechanical insulation (insulation, jackets, coverings, sealers, mastics and adhesives) with flame-spread index specified herein, and smoke-developed index specified herein, as tested by ASTM E 84 (NFPA 255) method.

In addition, the products, when tested, shall not drip flame particles, and flame shall not be progressive. Provide Underwriters Laboratories Inc., label or listing, or satisfactory certified test report from an approved testing laboratory to prove that fire hazard ratings for materials proposed for use do not exceed those specified.

D. The work shall be done only by mechanics thoroughly experienced in pipe insulation, and the quality of workmanship shall be the best attainable.

## 1.04 SUBMITTALS

A. Shop Drawings, Product Data, and Samples: In accordance with Section 01 33 00 – SUBMITTAL PROCEDURES, submit the following:

1. Manufacturer's technical product data and installation instructions for each type of mechanical insulation. Submit schedule showing manufacturer's product number, K-value, flame spread and smoke developed ratings, thickness, and furnished accessories for each mechanical system requiring insulation. Furnish necessary test data certified by an independent testing laboratory. Provide manufacturer's certification that insulation or any other materials provided shall not accelerate stress corrosion of stainless steel pipe per ASTM C795.
2. Submit manufacturer's sample of each piping insulation type required, and of each duct and equipment insulation type required. Affix label to sample completely describing product.
3. Insulation application schedule indicating equipment or piping systems sizes, insulation material, thickness, insulation vapor barriers, jackets, types of insulated fittings, accessories, and methods for each insulated system.

## 1.05 DELIVERY, STORAGE, AND HANDLING

A. Delivery: Deliver insulation, coverings, cements, adhesives, and coating to the site in containers with manufacturer's stamp or label affixed showing fire hazard indexes of products.

B. Storage and Handling: Protect insulation against dirt, water, chemical, and mechanical damage. Do not install damaged or wet insulation; remove from project site.

C. Outside storage of insulating materials is prohibited.

D. Insulating materials and accessory materials shall be packed in shipping containers so constructed as to ensure safe delivery of the materials in a satisfactory condition. The shipping containers shall be legibly marked with the name of the manufacturer, material, size, type, thickness, density, and quality contained in each container.

E. The Contractor shall provide a storage area for weather protection of all insulation materials and accessory materials after their arrival at the job site.

F. Installed insulation which has not been weather-proofed shall be protected from inclement weather by an approved waterproof sheeting installed by the Contractor. Any

wet or damaged insulation shall be removed and replaced by the Contractor at no additional cost.

## PART 2 - PRODUCTS

### 2.01 INSULATION GENERAL REQUIREMENTS

A. General: Provide insulation conforming to the referenced publications and the specified temperature ranges and approved manufacturers products.

### 2.02 INSULATION IDENTIFICATION SYSTEM

A. A system has been established which identifies the specific insulation type, insulation thickness, and insulation finish for each service indicated in the Contract Drawings. The specific insulation type, insulation thickness, and insulation finish is linked by the service number as listed in the "Piping Insulation Service Group Index" which appears in this Section. In addition, the insulation group only is listed in the "Piping, Gasket, Insulation, and Service Group Index" in Section 23 05 00 – BASIC PIPING MATERIALS AND METHODS. See that Section for an example.

B. Where insulation is scheduled for a pipe system below, insulation is required regardless of whether or not the letter designation for the insulation group is specifically called out on the pipe line description in the Contract Drawings. In some cases, a different amount of insulation may be required for a piping line than what is specified in the indexes. In these cases, the required insulation group will be changed and called out on the pipeline description on the Contract Drawings and its corresponding thickness shall prevail.

### 2.03 PIPING INSULATION SERVICE GROUP INDEX REVISED 2/21/13

PIPING INSULATION SERVICE GROUP INDEX

| SERVICE | LINE DESCRIPTION | INSUL GROUP | INSUL FINISH | SERV GROUP ON DWGS |
|---|---|---|---|---|
| AIR, INSTRUMENT AND COMPRESSED | From AC-01 & AC-06 to DG-01 & DG-02 | - | - | CA/IA |
| EQUIPMENT DRAINS | From Equipment, Tanks, Etc., Including Overflows (Non-corrosive) | Note 1 | Note 1 | ED |
| EQUIPMENT VENTS | From Equipment, Tanks, Relief Valves, Etc. (Non-corrosive) | Note 1 | Note 1 | V |
| FUEL OIL, DISTILLATE (NO. 2) | From AST-01 to DG-01 & DG-02 | - | - | FOS & FOR |
| FUEL OIL, DISTILLATE (NO. 2) | From AST-01 to FPS-01 | - | - | FOSUCT |

PIPING INSULATION SERVICE GROUP INDEX

| SERVICE | LINE DESCRIPTION | INSUL GROUP | INSUL FINISH | SERV GROUP ON DWGS |
|---|---|---|---|---|
| WATER, AFTER COOLER | From DG-01 & DG-02 to RR-01 & RR-02 | B | AL | ACS & ACR |
| WATER, JACKET WATER | From DG-01 & DG-02 to RR-01 & RR-02 | B | AL | JWS & JWR |
| EXHAUST, DIESEL ENGINE | From DG-01 & DG-02 to SIL-01 & SIL-02 and from SIL-01 & SIL-02, through the roof, to the top of the stacks. | C | AL | EXH |

Notes: 1. Insulate vent and drain systems per Insulation Group "A" with Insulation Finish "AA" only for continuous venting systems such as the deaerator vent and the condensate tank vent and continuous draining systems such as the blow-off tank outlet within 6 feet of access level so that persons do not accidentally get burned by them. Safety relief vents are not continuous venting systems.

## 2.04 INSULATION THICKNESS SCHEDULE REVISED 2/21/13

A. Nominal insulation thickness shall be as follows:

| Insul Group | A | B | C | J |
|---|---|---|---|---|
| PIPE TEMPERATURE (DEGREES F.) | | | | |
| Pipe Size (inches) | 100 to 199 | 200 to 299 | 300 to 399 | 40 to 200 |
| 1/2 | 1 | 1 | 1-1/2 | 1 |
| 3/4 | 1 | 1 | 1-1/2 | 1 |
| 1 | 1 | 1 | 2 | 1 |
| 1-1/4 | 1 | 1 | 2 | 1 |
| 1-1/2 | 1 | 1 | 2 | 1 |
| 2 | 1 | 1-1/2 | 2-1/2 | 1 |
| 2-1/2 | 1 | 2 | 2-1/2 | 1 |
| 3 | 1-1/2 | 2-1/2 | 2-1/2 | 1 |
| 4 | 1-1/2 | 2-1/2 | 3 | 1 |
| 6 | 1-1/2 | 3 | 3 | 1 |
| 8 | 1-1/2 | 3 | 3 | 1 |
| 10 | 1-1/2 | 3 | 3-1/2 | 1 |
| 12 | 1-1/2 | 3 | 3-1/2 | 1 |
| 14 | 1-1/2 | 3 | 3-1/2 | 1 |
| 16 | 2 | 3-1/2 | 4 | 1 |

## 2.05 PIPE INSULATION GROUP SPECIFICATIONS

A. General: Provide pipe insulation as specified below as dictated by the "Piping Insulation Service Group Index". Provide removable/reusable blankets in accordance with Insulation Group "R".

B. Groups "A" Through "C" - Pipe Insulation:

1. Pipe insulation shall be glass fiber. The insulation material shall consist of inorganic glass fibers, bonded with a thermosetting resin.

   a. Utilize preformed pipe insulation as much as possible. Preformed pipe insulation shall be in compliance with ASTM C 547, Class 1, rigid insulation. Thermal conductivity, according to ASTM C 335, shall be a minimum of 0.24 BTU-in/hr-sq ft degrees F at 100 degrees F mean temperature and below 0.29 BTU-in/hr-sq ft degrees F at 200 degrees F mean temperature.
   b. Insulation shall conform to ASTM C 795.
   c. When tested in accordance with ASTM E84, NFPA 255, and UL 723, as plain insulation or on a composite basis (insulation, jacket, and adhesive), insulation shall not exceed 25 flame spread and 50 smoke developed.
   d. Insulation shall be rated for continuous temperatures to 850 degrees F.
   e. Insulation shall be provided with all-service jacket.

2. The thickness shall be as specified in the Paragraph "Insulation Thickness Schedule".
3. Fittings and valves shall be insulated with glass fiber and built-up to the same thickness as the insulation for the adjoining pipe in accordance with insulation manufacturer's instructions.
4. Provide insulation from one of the following manufacturers and product trade names:

| Manufacturer | Trade Name of Approved Product |
|---|---|
| Johns-Manville/Schuller<br>International, Inc.<br>P.O. Box 625005<br>Littleton, Colorado 80162-5005<br>Phone Number: (800) 654-3103 | MICRO-LOCK<br>FIBERGLASS PIPE<br>INSULATION |
| Owens-Corning Corp.<br>One Owens Corning Pkwy<br>Toledo, Ohio 43659<br>Phone Number: (419) 247-5000 | FIBERGLAS<br>HEAVY DENSITY |
| Knauf Fiber Glass<br>One North Revmont Drive<br>Shrewsbury NJ 07701<br>Phone Number: (908) 389-3131 | FIBERGLASS<br>HEAVY DENSITY |

C. Group "J" - Pipe Insulation

1. Pipe insulation shall be flexible unicellular sheet insulation (FUS) ASTM C 534, Type II Sheet Flexible foam elastomeric thermal insulation of expanded closed cell structure, for maximum continuous temperature of minus -68 degrees F to 217 degrees F. Thermal conductivity shall be 157 BTU/HR FT degrees F at 75degrees F. Insulation shall have a flame spread rating of 25 or less and a smoke developed rating of 100 or less when tested by ASTM E84.
2. The thickness shall be as specified in the paragraph "Insulation Thickness Schedule."
3. All fittings shall be insulated with the same insulation thickness as the adjacent piping. All seams and mitered joints shall be adhered with adhesive.
4. Provide insulation by Armaflex or any other manufacturers that satisfy the technical requirements of this specification.

D. Group "R" – Removable/Reusable Insulation

1. Insulating material shall be tailor-made removable/reusable blankets. The blankets shall be made with a high temperature fiberglass mat without the use of chemical binders and suitable for temperatures up to 1200 degrees F.
2. All blanket and covers shall be constructed and designed to permit a conductivity of no more than 92 Btu/sq ft/hour and a surface temperature of not more than 135 degrees F. in still air at an ambient temperature of 80 degrees F. The minimum blanket insulation thicknesses shall be as follows:

   a. 130 to 300 degrees F. 1-1/2 inch thick
   b. 301 to 400 degrees F. 2-1/2 inch thick

3. Single layer blanket construction may be used for metal temperatures up to 600 degrees F. For metal temperatures over 600 degrees F., double layer construction must be used. The joints for double construction between blankets of the inner layer and those of the outer layer shall be offset from one another.
4. The inner liner material for hot surface temperatures up to 500 degrees F. shall be silicone coated glass 32 ounce. For hot surface temperatures between 500 and 1000 degrees F., the blanket insulation material shall be enclosed on all sides with a knitted wire mesh. The knitted wire mesh shall be 304 stainless steel wire, 0.011" knitted into a tubular fabric with a mesh size of 60 density.
5. The exterior jacket material shall be silicone glass cloth 32 ounce.
6. All blankets shall be quilted at frequent intervals with quilting fasteners.
7. The blankets shall be made and designed to fit tightly around the outside diameters of the flanges and valves, leaving no gaps when laced. Each blanket shall be constructed with 16 gauge stainless steel wire draw strings that pass through hog rings and are spaced 3/4 inch apart. All mating edges of adjacent blankets shall e fitted with blanket hooks, spaced approximately six (6) inches on centers or as required to provide securement for the stainless steel tie wire that are used to lace adjacent blankets together.

## 2.06 PIPE INSULATION FINISH SPECIFICATIONS REVISED 2/21/13

A. General: Provide pipe insulation finish as specified below and where stated in the "Piping Insulation Service Group Index".

B. Group "AA" - Insulation Finish

1. All outdoor and indoor hot insulated lines shall be finished as follows:

   a. Apply directly over the insulation an all service jacket.

C. Group “D” – Insulation Finish

1. Glass Cloth and Mastic: Comply with MIL-C-20079H, Type I for cloth and Type II for tape. Woven glass-fiber fabrics, plain weave, pre-sized a minimum of 8 oz/sq yd.

   a. Tape Width: 4 inches.

D. Group “AL” – Insulation Finish

1. Apply directly over the insulation an aluminum weatherproof jacket. This jacket shall be manufactured from aluminum alloy 5005 or 3003 half hard, not less than 0.024 inch thick with stucco embossed finish. The aluminum shall be factory attached to a moisture barrier of kraft paper treated for this service.
2. All joints shall be made rain or drip proof. Longitudinal joints shall be located on the side of the pipe with the open edge of the lap turned down to shed water. Circumferential joints on pipes that do not have enough slope to get a good shingle effect to keep water out of the joint shall have the inside end of the lap beaded or sealed with a permanently elastic mastic type sealant designed for this service.
3. The aluminum jacket shall be secured by aluminum straps 1/2 inch wide by 0.020 inch thick. The straps shall be placed on 12 inch centers (maximum). Each circumferential joint shall have a strap at the midpoint of the lap.
4. On long radius bends, the aluminum jacket shall be in sections cut on the miter, overlapped, and forming a neat snug fit, using sufficient bands and fasteners to hold jacket properly in place.
5. All 30 inch diameter and smaller insulated elbows shall be protected with a prefabricated elbow jacket. The jacket shall be manufactured of high purity 0.024 inch aluminum with a suitable moisture barrier on the interior of the jacket to prevent decomposition of the aluminum. The prefabricated elbow jacket shall be applied directly over the insulated fitting.

## 2.07 EQUIPMENT INSULATION SCHEDULE

A. General: Provide equipment insulation as specified below. Equipment insulating groups and finishes are also presented below.

EQUIPMENT INSULATION SCHEDULE

| EQUIPMENT | INSUL. THICK | INSUL. GROUP | INSUL. FINISH |
|---|---|---|---|
| SIL-01 | 6 inches | P | --- |
| SIL-02 | 6 inches | P | --- |

**2.08 EQUIPMENT INSULATION GROUP SPECIFICATIONS REVISED 2/21/13**

A. General: Provide equipment insulation as specified below and as dictated by the "Equipment Insulation Schedule".

B. Group "P" - Mineral Wool Insulation

1. Provide mineral insulation rigid board form in accordance with ASTM C612.
2. Insulation shall have a continuous service temperature rating of not less than 850 degrees F. The insulation thickness shall be as specified in the Paragraph "Equipment Insulation Schedule" of this Specification.
3. Thermal conductivity shall be no greater than 0.46 BTU-in per hour - deg. F - sq. ft. at 400 deg. F mean temperature in accordance with ASTM C335.
4. Provide jacket as follows:

   a. Apply directly over the insulation an aluminum weatherproof jacket. This jacket shall be manufactured from aluminum alloy 5005 or 3003 half hard, not less than 0.024 inch thick, with stucco embossed finish. The aluminum shall be factory attached to a moisture barrier of kraft paper treated for this service.
   b. All joints shall be made rain or drip proof. Longitudinal joints shall be located on the side of the pipe with the open edge of the lap turned down to shed water. Circumferential joints on pipes that do not have enough slope to get a good shingle effect to keep water out of the joint shall have the inside end of the lap beaded or sealed with a permanently elastic mastic type sealant designed for this service.
   c. The aluminum jacket shall be secured by aluminum straps 1/2 inch wide by 0.020 inch thick. The straps shall be placed on 12 inch centers (maximum). Each circumferential joint shall have a strap at the midpoint of the lap.
   d. On long radius bends, the aluminum jacket shall be in sections cut on the miter, overlapped, and forming a neat snug fit, using sufficient bands and fasteners to hold jacket properly in place.
   e. All 30 inch diameter and smaller insulated elbows shall be protected with a prefabricated elbow jacket. The jacket shall be manufactured of high purity 0.024 inch aluminum with a suitable moisture barrier on the interior of the jacket to prevent decomposition of the aluminum. The prefabricated elbow jacket shall be applied directly over the insulated fitting.

C. Acceptable Manufacturers and Products

1. Group "P" - Mineral Wool Insulation

Johns-Manville/Schuller
International, Inc.
P.O. Box 62500
Littleton, Colorado 80162-5005
Phone Number: (800) 654-310

Owens-Corning Corp.
One Owens Corning Pkwy
Toledo, Ohio 43659
Phone Number: (419) 247-5000

Partek Insulation
908 S.E. Partek Drive
Phenix City, AL 36867
Phone Number: (800) 752-2738

## PART 3 - EXECUTION

### 3.01 GENERAL INSULATION INSTALLATION

A. General: Install insulation material with smooth and even surfaces. Unless otherwise specified, install insulation materials, accessories, and finishes in accordance with the manufacturer's published recommendations.

B. Fire Precaution: Care shall be exercised by the Contractor that no cutting, welding, or open flames are permitted in the areas where flammable mastics or other materials are used. The precaution period shall extend until the material has cured sufficiently so that no further fire hazard exists.

C. Insulation Release: Before insulation is applied to any piping or equipment, the Contractor shall obtain from the Engineers a written release stating that the item is ready for insulation.

D. Manufacturer's Recommendations: All materials specified herein shall be installed in full accordance with the manufacturer's recommendations for the best performance and durability of his product, notwithstanding any requirements or omissions herein with respect to preparation of equipment before insulating or method of application.

E. Expansion Joints In Insulation: Where necessary, the Contractor shall furnish suitable expansion joints in the insulation to prevent cracking or wrinkling due to expansion and contraction of the surface being insulated.

F. Surface Condition: Do not apply insulation materials until all surfaces to be covered are clean and dry, all foreign materials, such as rust, scale, and dirt have been removed, and surfaces have been painted. Insulation shall be clean and dry when installed and during the application of any finish.

G. Moisture and Vapor Seal: Provide a complete moisture and vapor seal wherever insulation terminates against metal hangers, anchors and other projections through insulation on cold surfaces for which a vapor seal is specified.

H. Asbestos Containing Material:

1. No Contractor, Subcontractor, or Supplier shall furnish any asbestos containing material.
2. Provide "Asbestos Free" identification labels for insulated piping and equipment as specified in Section 23 07 50 – MECHANICAL IDENTIFICATION.

## 3.02 INSULATION FOR PIPING

A. General: Installation

1. All sectional pipe insulation shall be applied with staggered girth joints tightly butted together as recommended by the insulation manufacturer. Each section of insulation is to be held in place with separate loops of 16 gauge annealed stainless steel wire placed not more than 12 inches on center.
2. Insulation shall not be applied to any flanged, machined, or welded surfaces until they have passed all field tests, including hydrostatic, and have been released for insulation.

B. Insulation of Valves, Flanges, Fittings, Etc.

1. High maintenance items such as control valves, some flanged valves, some flanged valves, flanged joints, strainers and similar type items located in insulated lines shall be insulated with removable/reusable blankets. The Contractor shall insulate all high maintenance items as directed by the Engineer with removable/reusable blankets in accordance with Insulation Group “R” of this Section. The following items are labeled high maintenance items and shall be provided with removable/reusable blankets:

   a. Bellows Style Flexible Connectors.
   b. All Drain and Vent Valves (JW & AC).

2. In all insulated lines, with the exception of the high maintenance items which are insulated with blankets, the valve bodies, fittings, and flanges shall be insulated with the same material and the same thickness as the pipe insulation using mitered pipe insulation and/or block insulation securely cemented together. Valves shall be insulated up to the yokes. All flange insulation shall be the removable type, but not the replaceable type.

C. Gaps and Terminations: Neatly terminate all insulation at each end of unions and at other points where required and seal. Fill gaps occurring at hangers with insulating cement and finish flush with the adjoining pipe insulation as specified for fittings.

D. Butt pipe insulation against pipe hanger insulation inserts. For cold piping apply wet coat of vapor barrier lap cement on butt joints and seal joints with 3 inch wide vapor barrier tape or band.

## 3.03 INSULATION FOR EQUIPMENT

A. Insulation Supporting Clips and Other Components: Where insulating clips, supports, angles, studs, washers, etc., are not furnished with the equipment, the Contractor shall furnish and install them. The necessity for location of, quantity, and manner of application shall be as approved by the Engineer.

B. Insulation Over Irregular Surfaces: All irregular surfaces, heads, outlets, nozzles, and fittings shall be insulated with the same material and the same thickness as specified for the tank or equipment of which they are a part. Where necessary, the designated insulation shall be applied in a plastic form and trowelled to a smooth finish.

C. Removable Manhole and Handhole Covers: Removable covers shall be so arranged with insulation stop rings, tapered insulation, etc., that they can readily be removed without disturbing the insulation or its finish. Such removable sections need not be of the type which after having been removed can be installed.

D. Corner Trim for Insulation Finish: Where necessary, the Contractor shall furnish and install metal corner bead and expansion base screen, secured to the poultry wire netting, to obtain a uniform thickness and workmanlike, quality installation.

## 3.04 PAINTING AND IDENTIFICATION

A. Do not insulate or paint over factory attached nameplate labels on equipment, valves, and other devices.

**END OF SECTION 230700**

# SECTION 263215

# DIESEL-ALTERNATOR EMERGENCY SYSTEM

## PART 1 - GENERAL

### 1.01 SCOPE OF WORK

A. The diesel engine generator set manufacturer shall provide a fully functional system including generator sets, generator set auxiliaries, generator paralleling controls, , power monitoring system, and all accessories and auxiliary systems required for operation of these components as a complete system as specified in this Section and other Sections of this Division.

1. Provide diesel engine generator sets, for emergency service, as shown on the Drawings and in conformance with this Section.
2. Provide generator set paralleling and switchgear controls as shown on the Drawings and in conformance with Division 26 Section “Metal-clad Switchgear” and Division 26 Section “Sequence of Operations”.

B. Coordinate Specification requirements with the work of all trades, submit equipment shop drawings, purchase and ship equipment to project site with manufacturer’s written installation, operation, troubleshooting and maintenance instructions, unload, store, install, setup, test, calibrate and commission the equipment, provide training, furnish specified spare parts and special tools, and provide administrative and logistical support to complete related work in compliance with the Contract Documents.

C. Perform electrical acceptance tests in compliance with Part 3 of this Section.

### 1.02 RELATED DOCUMENTS

A. Related requirements are included in the following Sections:

1. Division 23 Section “Internal-Combustion Engine Air-Starting Systems” for Air-Start system requirements.
2. Division 23 Section “Packaged Fuel Oil Pumping Systems” for fuel supply system requirements.
3. Division 23 Sections for fuel, water, and exhaust piping, valves, and other related equipment external to the generator.
4. Division 26 Section “Metalclad Switchgear”
5. Division 26 Section “Sequence of Operations”

### 1.03 SUMMARY

A. This Section includes packaged diesel engine driven generator sets with the following

components and accessories:

1. Engine
2. Generator
3. Generator set control panel
4. Engine starting components
5. Engine coolant heater
6. Engine exhaust silencer
7. Fuel system accessories external to engine
8. Generator protective relaying
9. Alternator anti-condensation heater
10. Remote Annunciator (NFPA 110)
11. Remote emergency stop switch
12. Surge suppression device

## 1.04 DEFINITIONS

A. In addition to definitions listed elsewhere in this Specification, the following definitions apply to this Section:

1. Emergency Systems: refer to NEC Section 700 for definition.
2. EPSS: emergency power supply system (NFPA 110 definition)
3. Generator: commonly used term for a rotating three phase brushless alternator with 60Hz output voltage.
4. Generator set (Genset): a complete assembly of engine and generator set components capable of generating electricity.
5. Operational Bandwidth: The total variation from the lowest to highest value of a parameter over the range of conditions indicated, expressed as a percentage of the nominal value of the parameter.
6. Steady-State Voltage Modulation: The uniform cyclical variation of voltage within the operational bandwidth, expressed in Hertz or cycles per second.

## 1.05 QUALIFICATIONS

A. Manufacturer’s Factory Qualifications: Manufacturing facilities shall have accreditation to ISO 9000:2000 or an equivalent quality management system acceptable to the Director’s representative. The manufacturing company shall be listed in a published NRTL directory of companies offering NRTL-listed and labeled products.

B. Supplier Qualifications: Manufacturer's authorized representative who is factory-trained and manufacturer-approved for installation of units required for this Project. Maintain, within 100 miles of Project site, a service center capable of providing training, parts, and emergency maintenance repairs.

1. Engineering Responsibility: Preparation of data for vibration isolators and seismic restraints of engine skid mounts, including Shop Drawings, based on testing and engineering analysis of manufacturer's standard units in assemblies similar to those indicated for this Project.

C. Testing Firm Qualifications: An independent firm, with experience and capability to conduct specified tests, and is a member company of NETA or is an NRTL as defined by OSHA in 19 CFR 1910.7, acceptable to the AHJ.

D. Testing Firm's Field Supervisor Qualifications: person currently certified by NETA or NICET to supervise on-site testing specified in Part 3.

E. Product Options: Drawings indicate size, profiles, and dimensional requirements of packaged generator sets and are based on the specific system indicated.

F. Electrical Components, Devices, and Accessories: Listed and labeled as defined in NFPA 70, Article 100, by a testing agency acceptable to the AHJ, and marked for intended use.

## 1.06 REFERENCE STANDARDS

A. Comply with the following standards in effect at the time of bid submittal unless otherwise noted in Division 1:

1. IEEE Std 446 Recommended Practice for Emergency and Standby Power Systems for Commercial and Industrial Applications
2. NEMA ICS 6 Industrial Control and Systems Enclosures
3. NEMA MG 1 Motors and Generators
4. UL 508 Industrial Control Equipment
5. NFPA 37 Standard for the Installation and Use of Stationary Combustion Engines and Gas Turbines
6. NFPA 70 National Electric Code
7. NFPA 101 Life Safety Code
8. NFPA 110 Standard for Emergency and Standby Power Systems - requirements for Level 1 EPSS.

## 1.07 ENVIRONMENTAL CONDITIONS

A. Ambient temperature, humidity, and elevation ranges: Diesel engine generator sets shall be rated for continuous operation at full rated load without derating, under the following conditions:

1. Ambient Temperature: -12 deg C to +40 deg C.
2. Humidity: Less than 90 percent (non-condensing).
3. Altitude: Not exceeding 3300 feet (1000 m).

B. Environmental Conditions: The engine-generator system is located indoors. The HVAC system designed to support emergency generator operation is designed to ventilatie the generator during operation and to maintain minimum indoor ambient temperatures for safe operation. The engine-generator system shall withstand all ambient environmental conditions without mechanical or electrical damage or degradation of performance capability. Coordinate with the "H" contract for design conditions and system functionality. If conditions indicated are not within the operational limits of the engine-generator system, notify the Director's Representative immediately.

## 1.08 SUBMITTALS

A. Waiver of Submittals: The "Waiver of Certain Submittal Requirements" in Section 013300 does not apply to this Section.

B. Comply with Division 1 Section "Submittals" for procedures, format and content.

C. Preconstruction Submittals

1. Qualification data for equipment Manufacturers, including quality certification
2. Qualification data for Supplier
3. Qualification data for design engineers
4. Qualification data for Company Field Advisor

D. Shop Drawings: Sheets containing text only shall be 8.5" by 11" minimum size. All sheets containing CAD drawings, pictures, schematics, illustrations, etc. shall be 11" by 17" minimum size. Include the following:

1. Detailed drawings for generator sets, and equipment assemblies indicating dimensions, weights, structural design recommendations for dynamic loading, required clearances for maintenance and operations, method of field assembly, components, and location and size of each field connection.
2. Dimensioned outline plan and elevation drawings of engine-generator set, walk-in enclosure and other specified components.
3. Wiring Diagrams: Power, signal, and control wiring. Show factory wiring and field wiring, phase rotation and grounding connections.

    a. Provide complete interconnection wiring diagrams showing point-to-point connections, wire sizes and types, and type of signal (volts, amps, analog, digital, communication protocol, etc.) for all interconnected system components.

4. Bill of materials specially prepared for this project. Include a separate list of recommended spare parts and special tools, which includes but is not limited to the items listed under Section "Spare Parts and Special Tools."

E. Product Data: Include the following:

1. Manufacturer's engine and generator technical data, including the following:

    a. Ratings
    b. Performance
    c. Engine and Governor data
    d. Voltage regulator data
    e. Exciter and excitation power supply data
    f. Accessories

2. Instrument transformers

3. Lightning arrestors and surge capacitors
4. Vibration Isolators
5. Sound data
6. Fuel oil pumps

F. Design Data

1. Generator electrical ratings and winding characteristics, including thermal damage curve, subtransient reactance, transient reactance, short circuit ratings, voltage regulation, and nameplate data.
2. Detailed description of engine overspeed device.
3. Time-current characteristic curves for generator overcurrent protective device
4. Design Calculations: Signed and sealed by a qualified registered professional engineer. Calculate requirements for selecting vibration isolators and seismic restraints and for designing vibration isolation bases.
5. Vibration Isolation Base Details: Signed and sealed by a qualified registered professional engineer. Detail fabrication, including anchorages and attachments to structure and to supported equipment. Include base weights.
6. Fuel Oil Pumps:

   a. General arrangement drawings showing all equipment and accessories. All mechanical and electrical points of connection shall be clearly identified.
   b. Fuel Oil Pumps: Manufacturer's Product Data including:

      1) Flow Rate (GPM)
      2) Discharge Pressure
      3) NPSHA
      4) Materials of Construction
      5) Motor Data
      6) Pump/Motor Shop Drawing
      7) Brake Horsepower
      8) Recommended Spare Parts List
      9) Completed Tabulation Sheets provided at the end of this Section.
      10) Pump Performance Curve (Flow/Power Versus Pressure).

   c. Control Panel

      1) Wiring Diagram showing all power and control wiring. Differentiate between field and factory wiring.
      2) Dimensioned panel drawings all switches pilot lights gages etc.
      3) Panel NEMA rating.
      4) Provide all control logic
      5) Manufacturers product data for all control panel components.

   d. Piping Fittings: Provide piping submittals in accordance with this Section.
   e. Valves: Provide valve submittals for valves as specified in this Section.
   f. Strainers: Provide product data in accordance with this Section.
   g. Meters/Gages: Provide product data in accordance with this Section.
   h. Relief Valves: Provide product data.

7. Coordination Drawings: Submit drawings specially prepared by the Contractor for this Project, including floor plans and sections, drawn to scale. Include conduit stub-up and connection locations with dimensions for each connection. Show the following:

    a. Clearances for access to generator and engine components.
    b. Connections to engine cooling piping, fuel oil supply and return piping, and exhaust piping.
    c. Exhaust silencer.
    d. Anchor bolts and vibration isolators.

G. Test Reports

1. Certified factory test reports, including sound measurement and exhaust emission test reports.
2. Acceptance test reports.
3. Day Tank Test Reports as listed in “Quality Assurance” paragraph..

H. Certificates:

1. Certification of Torsional Vibration Compatibility: Comply with NFPA 110.
2. Welding certificates.

I. Manufacturer’s Instructions

1. Unloading, hoisting, rigging, short term storage, long term storage, and installation instructions
2. Method of field assembly, and location and size of each field connection
3. Battery filling, initial charging, battery charger settings
4. Generator set installation, testing, and commissioning instructions with checklists

J. Manufacturer’s Field Reports

1. Inspection of equipment installation (prior to energization and startup)
2. Acceptance test report
3. Training, including notification to Director’s Representative and class attendance list
4. Maintenance service

K. Operation and Maintenance Data

1. Operation and Maintenance Manuals for engine, generator, and accessories: conform to Division 26 Section “Electrical General Provisions.”

L. Closeout Submittals

1. Training course materials
2. Callback and follow-up service reports

M. Warranty: Special warranty specified in this Section.

## 1.09 QUALITY ASSURANCE

A. Source Limitations: Obtain generator sets and auxiliary components from a single Supplier.

B. Engine Exhaust Emissions: Comply with applicable state and local government regulations in effect at the project location.

C. Noise Emissions: Comply with applicable state and local government requirements applicable to sound emitted by generator set including engine, engine exhaust, engine cooling-air intake and discharge, and other components of installation.

D. Day Tank Test Reports: Provide the following manufacturers test certificates with each shipped day tank. Submit to the Director's Representative for review.

1. Tank Tests: pressure test, leak proof test, and structural integrity/appearance test
2. Level Controller Tests: operational test of level sensors, level indicator, level control, alarms, and backup devices.
3. Return Fuel Oil Pump Tests: vacuum test, flow test, pressure test, leak proof test, ampere/voltage test, load test, and overload test.

## 1.10 COORDINATION

A. Coordinate layout and installation of generator sets with, fuel system, remote generator control system, engine exhaust system, intake/exhaust air minimum clearances, overhead structural supports, and the work of other trades.

B. Coordinate size and location of concrete bases with structural design. Cast anchor bolt inserts for enclosed generator sets in accordance with approved shop drawings. Comply with generator set manufacturer's installation requirements and recommendations. Concrete, reinforcement, and formwork requirements are specified in Division 3.

C. Submit specially prepared Coordination Drawings, including plans and sections, drawn to scale. Include scaled equipment layout and relationship between generator set enclosure and adjacent structural, mechanical, and electrical components in the enclosure area. Include the following:

1. Underground and above ground conduit and other buried utilities
2. Clearances for access
3. Connections to generator enclosure assembly for power, control, and grounding.
4. Location of exterior stairs and landings, location of Existing Siemens Outdoor Switchgear, pad-mounted equipment locations, nearby structure, walls, doors, piping, intake and exhaust louvers, and other important components.

## 1.11 WARRANTY

A. GenSet – Manufacturer's Standard 2 years/1,200 Hours from acceptance by the Director's Representative.

1. Warranty shall include all engine related components that are mounted or shipped loose. Components shall include by not be limited to the following: Air-Start air motor and fuel oil cooling system.

B. Day Tank – Manufacturer's Standard 2 years/1,200 Hours from acceptance by the Director's Representative.

C. Exhaust Silencer – Manufacturers Standard from acceptance by the Director's Representative.

D. Remote Mounted Radiator – Manufacturer's Standard 2 years/1,200 Hours from acceptance by the Director's Representative.

# PART 2 - PRODUCTS

## 2.01 MANUFACTURERS

A. Engine Generator Sets:

1. Caterpillar, Inc.
2. Cummins, Inc.
3. MTU On-Site Energy (Basis of Design)

B. Automatic Daytank Manufacturers

1. Subject to compliance with requirements, provide products by one of the following:

a. Engine & Compressor Accessories
b. Simplex (Basis of Design)
c. Tramont
d. or approved equal

C. Muffler Manufacturers

1. Subject to compliance with requirements, provide products by one of the following:

a. GT Exhaust Systems, Inc. (Basis of Design)
b. Universal Silencer
c. Stoddard Silencers, Inc.
d. Nelson Silencers, Inc.
e. or approved equal

## 2.02 ENGINE-GENERATOR SET

A. The Engine-Generator set shall be a coordinated assembly of compatible components.

B. Power Output Ratings: Provide two standby rated engine- generator sets of the same size with the following individual output ratings:

1. Power output per generator set: 2000kW / 2500 kVA minimum standby rating, when operated as a unit as evidenced by records of prototype testing.

C. Output Voltage: 13200 / 7630V, 3-phase, 4-wire, 60 Hz.

D. Outage Time: Comply with NFPA 110, Type 10, EPSS requirements

E. The time required to automatically start, accelerate to rated speed and voltage, synchronize and parallel all generator sets to the system bus on a normal power failure shall not exceed 15 seconds, assuming that the generator set is in an ambient temperature of 40 deg. F or greater, and water jacket heaters are operating properly.

F. Safety Standard: Comply with ASME B15.1.

G. Nameplates: Each major system component shall be equipped with a nameplate to identify manufacturer's name and address, and model and serial number of component.

H. Fabricate engine and generator mounting frame and attachment of components to resist generator set movement in compliance with the seismic design requirements for this project

I. Mounting Frame: Adequate strength and rigidity to maintain alignment of mounted components without depending on concrete foundation. Mounting frame shall be free from sharp edges and corners and shall have lifting attachments arranged for lifting with slings without damaging components.

1. Provide vibration isolators, spring/pad type, quantity as recommended by the generator set manufacturer. Isolators shall include seismic restraints.
2. Rigging Diagram: Inscribed on metal plate permanently attached to mounting frame to indicate location and lifting capacity of each lifting attachment and generator set center of gravity.

## 2.03 GENERATOR SET PERFORMANCE

A. Oversizing generator compared with the rated power output of the engine is permissible to meet specified performance.

1. Nameplate Data for Oversized Generator: Show ratings required by the Contract Documents rather than ratings based on engine kW output.

B. Steady-State Voltage Operational Bandwidth: 2 percent of rated output voltage from no

load to full load.

C. Steady-State Voltage Modulation Frequency: Less than 1 Hz.

D. Transient Voltage Performance: Not more than 10 percent variation for 50 percent step-load increase or decrease. Voltage shall recover and remain within the steady-state operating band within 0.5 second.

E. Steady-State Frequency Operational Bandwidth: Plus or minus 0.25 percent of rated frequency from no load to full load.

F. Steady-State Frequency Stability: When system is operating at any constant load within the rated load, there shall be no random speed variations outside the steady-state operational band and no hunting or surging of speed.

G. Transient Frequency Performance: Less than 2-Hz variation for a 50 percent step-load increase or decrease. Frequency shall recover and remain within the steady-state operating band within three seconds.

H. Output Waveform: At no load, harmonic content measured line to neutral shall not exceed 2 percent total with no slot ripple. The telephone influence factor, determined according to NEMA MG 1, shall not exceed 50 percent.

I. Sustained Short-Circuit Current: For a 3-phase, bolted short circuit at system output terminals, the system shall supply a minimum of 250 percent of rated full-load current for not less than 10 seconds and then clear the fault automatically, without damage to winding insulation or other generator system components.

J. Excitation System: Performance shall be unaffected by voltage distortion caused by nonlinear load.

K. The generator set shall share real and reactive load proportionally within plus or minus 5% with all other generator sets in the system.

## 2.04 ENGINE

A. Fuel: No. 2 diesel fuel oil, to ASTM D975.

B. Rated Engine Speed: 1800 rpm maximum.

C. Maximum Piston Speed for Four-Cycle Engines: 2250 fpm.

D. Lubrication System: The following items are mounted on engine or skid:

1. Lube Oil Filter: Rated to remove 90 percent of particles 5 micrometers and smaller while passing full flow. Provide automatic bypass.
2. Thermostatic Control Valve: Control flow in system to maintain optimum oil temperature. Unit shall be capable of full flow and be designed to be fail-safe.

3. Crankcase Drain: Arranged for complete gravity drainage to an easily removable container with no disassembly and without use of pumps, siphons, special tools, or appliances.

E. Engine Fuel System:

1. Main Fuel Pump: Mounted on engine. Pump shall ensure adequate primary fuel flow under all starting and load conditions.
2. Relief-Bypass Valve: Shall automatically regulate pressure in fuel line and return excess fuel to source.

F. Coolant Jacket Heater: Electric-immersion type, factory installed in coolant jacket system. Comply with NFPA 110 requirements for Level 1 equipment for heater capacity. Voltage shall be 208V.

G. Governor: Adjustable isochronous, with speed sensing.

H. Overspeed protection: Separate overspeed protection device, independent from governor, designed for fail-safe operation in the event of loss of engine speed sensing and circuit faults.

## 2.05 ENGINE COOLING SYSTEM

A. Description: Remote-mounted, parallel-core radiator with horizontal core and vertical air discharge. Electrical connection shall be 208V from MCC mounted starters.

B. Acceptable Manufacturers:

1. Smithco Engineering, Inc.; PO Box 571330 Tulsa, OK 74157; (918) 446-4406 [Basis of Design] – Model 1 F17-130-1
2. IEA, Inc.; 9625 55th Street, Kenosha, WI 53144; (262) 942-1414
3. Rocore Industries, Inc.; 9845 South 7th Street, Franklin, WI 53132; (414) 421-4666

C. Design Responsibility: The radiator shown on the drawings was selected based on the Basis of Design GenSet. The generator manufacturer shall be responsible for providing a radiator that is compatible with the supplied generator. The selected radiator shall fit within the specified clearances shown on the Drawings. The selected radiator shall provide sufficient cooling for the generator and associated equipment.

D. Basis of Design Performance:

1. Jacket Water
   a. Minimum Heat Rejection (mmBTUH): 2.982
   b. Surface per Unit-Finned Tube (SQFT): 9,618
   c. Fluid: 50% Glycol Solution
   d. Flowrate (GPM): 357
   e. Inlet/Outlet Temperatures (Deg F): 210 / 191
   f. Tube Material: SA 214 WLD

g. Fouling Resistance (SQFT-hr-Deg F/BTU): 0.001
h. Design Pressure (PSIG)/Temperature(Deg F): 100/300

2. Aftercooler
   a. Minimum Heat Rejection (mmBTUH): 2.290
   b. Surface per Unit-Finned Tube (SQFT): 15,280
   c. Fluid: 50% Glycol Solution
   d. Flowrate (GPM): 154
   e. Inlet/Outlet Temperatures (Deg F): 180 / 146
   f. Tube Material: SA 214 WLD
   g. Fouling Resistance (SQFT-hr-Deg F/BTU): 0.001
   h. Design Pressure (PSIG)/Temperature(Deg F): 100/300

3. Fan Design
   a. Blade Material: Aluminum
   b. No. of Blades: 6
   c. Fan RPM: 220
   d. Fan Airflow (SCFM): 54,690

E. Electrical: 208V/60Hz/3 Phase. TEFC. The radiator fan motor shall receive power from the MCC. Maximum motor horsepower is 25 HP per radiator. Motor speed is 1170 RPM.

F. Coolant: Solution of 50 percent ethylene-glycol-based antifreeze and 50 percent water, with anticorrosion additives as recommended by engine manufacturer.

G. Temperature Control: Self-contained, engine-mounted, thermostatic-control valve that modulates coolant flow automatically to maintain a constant, optimum coolant temperature as recommended by engine manufacturer.

H. Coolant Hose: Flexible assembly with inside surface of nonporous rubber and outer covering of aging-, ultraviolet-, and abrasion-resistant fabric.

1. Rating: Working pressure suitable for the application, and noncollapsible under vacuum.
2. End Fittings: Flanges or steel pipe nipples with clamps to suit piping and equipment connections.

I. Expansion Tank: Remote-mounted to radiator. Provide one expansion vessel with two compartments. One compartment shall support the Aftercooler water loop and the second compartment shall support the jacket water loop. Provide all necessary venting and draining components and fittings as shown on the drawings and as required by the Manufacturer for a complete and operational system.

J. Fuel Oil Cooler: Provided with Day Tank. Refer to the Day Tank specification paragraph for requirements. Coordination is the responsibility of the contractor and is required between the engine manufacturer and day tank manufacturer. Low Level Switches: Factory plumbed, located on each cooling system compartment of the expansion tank to ensure indication of minimum coolant levels. Connect alarm signal to engine control

unit.

K. Mounting: Radiator manufacturer shall provide a radiator base that is free standing.

L. Radiator Control Connections:

1. Expansion Tank Low Level Switch (Aftercooler Water) - Connect alarm signal to engine control unit.
2. Expansion Tank Low Level Switch (Jacket Water) - Connect alarm signal to engine control unit.
3. Motor Start/Stop – Coordinate with motor control center starter wiring diagram. Engine control unit shall start and stop radiator fans.
4. Motor General Alarm - Coordinate with motor control center starter wiring diagram. Engine control unit shall alarm upon overload or under speed of radiator fans.

M. Provide OSHA approved cage type belt guard.

N. Drains: All coolant and oil drains shall be at an accessible point. If drain plugs or standard drain valves are located in non- accessible locations, drain lines shall be extended and a full-port ball valve shall be provided as a shut-off/isolation valve in an accessible location in close proximity to the drain line termination. Drain lines shall be located such that the operator can place a drain pan or bucket to properly drain the system with minimal spillage.

## 2.06 FUEL SUPPLY SYSTEM

A. General

1. Provide a packaged fuel oil day tank for each Generator Set. Day tank shall be complete in order to provide the engine with a reliable, local source of fuel. Day tank shall be for use with main tank and remote fuel delivery system described elsewhere in order to provide an automatic, self-refilling fuel supply system.
2. Design and supply as an engineered system. Each tank shall include all inlet flow control devices, manual valves, level controls, remote pump activation, return oil pumps, indicators, alarms and all other devices as required to form an integrated, functional system in compliance with UL142, NFPA31, and NFPA37.
3. The system shall be for use with fuel oil having a flash point at or above 100ºF and defined as class II or class III liquids.
4. Electrical equipment used in the system shall be in accordance with NFPA30, wherein it states "For areas where class II or class III liquids only are stored or handled at a temperature below their flash points, the electrical equipment may be installed in accordance with provisions of NFPA70, National Electric Code, for ordinary locations..."
5. The day tank shall bear the label of Underwriters Laboratories standard 142 and UL508A labels.

B. Power Requirements

1. Single point 208V, 3 Phase connection. Provide step-down transformer for control power circuits.

C. Capacity: 275 Gallons

D. Construction: Rectangular, double-wall, welded-steel, atmospheric tank with a welded steel channel base suitable for bolt attachment to a concrete pad.

E. Coatings:

1. Interior: Permanent, rust-inhibiting, two-part epoxy. Temporary solvent-based or petroleum based film rust preventative is not acceptable.
2. Exterior: Two-coat, fuel resistant, polyurethane enamel, painted to match the color of the generators.

F. Containment: Tank shall include a welded steel secondary containment integral rupture basin with a capacity of 150 percent of nominal capacity.

1. Leak Detector: Locate in rupture basin and connect to provide audible and visual alarm in the event of integral generator base fuel tank leak. Alarm shall annunciate locally and shall also indicate an alarm at the Powerhouse.
2. The containment shall be equipped with a separate e-vent as required by UL 142.
3. A drain with ball valve shall be provided for both the main tank and the containment volume.

G. Piping Connections: Include fuel suction and return lines to fuel storage tank; fuel supply and return lines to two engines, local fuel fill, vent line, overflow line, and tank drain line complete with shutoff valve, sized as follows:

| Service | Size | Quantity | Construction |
|---|---|---|---|
| Normal Vent | 1-1/2 inch | 1 | NPT Half Coupling |
| Secondary Containment Vent (Emergency) | 4 inch | 2 | NPT Half Coupling |
| Fuel Oil Outlet to Engine | 1 inch | 2 | NPT Half Coupling |
| Fuel Oil Return from Engine | 1 inch | 2 | NPT Half Coupling |
| Fuel Oil Inlet from Transfer Pumps | 2 inch | 1 | NPT Half Coupling |
| Overflow Return Pump(s) Suction | 2 inch | 1 | NPT Half Coupling |

| | | | |
|---|---|---|---|
| Alternate Fuel Oil Return to Main Fuel Oil Tank | 2 inch | 1 | NPT Half Coupling |
| Drain (Main Tank) | 3/4 inch | 1 | NPT Half Coupling |
| Drain (Containment Basin) | 3/4 inch | 1 | NPT Half Coupling |
| Containment Basin Return to Main Fuel Oil Tank | 2 inch | 1 | NPT Half Coupling |
| Level Float Switch | 2 inch | 2 | NPT Half Coupling |
| Containment Basin Leak Detection Float Switch | 1-1/4 inch | 1 | NPT Half Coupling |
| Level Transmitter for GLDS system | 2 inch | 1 | NPT Half Coupling |
| Spare (with Nipple and Cap) | 2 inch | 1 | NPT Half Coupling |

1. All connections 2 inches and under shall be NPT half couplings unless otherwise noted. All connections 2-1/2 inches and larger shall be 150# R.F.S.O. flanged unless otherwise noted.

H. Day Tank System Controller: A UL Listed, integrated design level controller package which provides differential level control for activation of remote fill pumps, unit mounted return pumps, tank level indication, system alarms, and manual operating controls.

1. Level controller shall be self-contained as a unit within a NEMA12 rated enclosure mounted on the day tank. The controller shall utilize discrete level sensors and circuit paths for level alarms, primary pump control and backup pump control. Failure in one sensor or circuit path shall not disable the entire controller.
2. The system controller shall provide the following Control Functions:

   a. "Auto-off-manual" pump control mode switch
   b. "Press to test" pump push-button
   c. Pump start-stop automatic level control
   d. Overflow return pump control

3. The system controller shall provide the following Indication Functions:

   a. Fuel level
   b. Power available
   c. Switch not in auto
   d. Return pump running
   e. Low level alarm

f. Critical low level alarm
g. Overflow (High) alarm/pump control activated
h. Day Tank leak

4. The system controller shall provide the following Inputs/Outputs:

a. "Call for Fuel" - Remote pump start/stop (Output)
b. Critical Low level alarm (Output)
c. General alarm (Output), include high-high, high, low, and critical low alarms combined for remote annunciation
d. Day tank leak (Output)
e. "Return Oil Pump On" (Input)

5. Tank Level Control Valve:

a. Provide one control switch and solenoid type control valve for each fuel oil day tank. Valve body shall have a minimum working pressure rating of 150 psig at 200 degrees F.

6. Level/Leak/Temperature Control Logic

a. Provide two level switch devices for logical operations listed below. The two devices shall be indicated by the number "1" and the number "2". Provide distribution of level points as indicated below.
b. 95% Normal Fuel Level – High-Level Alarm Sensor – Separate device operates alarm and return fuel oil pump start contacts. (Device 1)
c. 90% Normal Fuel Level – Supply Pump Level Sensor - Separate device closes solenoid valve and opens 'Call for Fuel" contacts. (Device 2)
d. 70% Normal Fuel Level – Intermediate-Level Sensor – Separate device operates return fuel oil pump stop contacts. (Device 1)
e. 50% Normal Fuel Level – Supply Pump Level Sensor – Separate device opens solenoid valve and closes 'Call for Fuel" contacts. (Device 2)
f. 25% Normal Fuel Level – Low-Level Alarm Sensor – Separate device operates alarm. (Device 2)
g. 6% Normal Fuel Level – Critical Low-Level Alarm Sensor –Separate device operates alarm contacts and engine shutdown output contacts. (Device 1)
h. Rupture Basin Float Switch: Relay, shut fuel oil inlet valve and Day tank leak output contacts. This switch is not part of devices 1 and 2.
i. Equip the day tank with High Temperature monitoring via a high temperature sensor/probe. Provide panel alarm indicator light and dry alarm contacts for this condition. Activate the day tank overflow return pump to pump the day tank down to a point that triggers it to automatically refill with cooler fuel. Continue this operation until a lower operational temperature is achieved.

I. Fuel Oil Meters:

a. Provide positive displacement type. Maximum variation from absolute accuracy measurement over entire range of meter shall be not greater than

plus or minus five-tenths of one percent. Provide meters with horizontal setback registers calibrated to read in gallons and tenths of gallons. Construct meters with cast-iron bodies, with working parts made of material to resist wear, friction, and corrosion and can handle oil containing a small percentage of sulphur. Each meter shall have capacity to measure a maximum of 25 gpm, with pressure drop through meter not exceeding 6 psi.

J. Fuel Oil Filters:

1. Provide two filters of the throwaway filter element type, consisting of shell, filter elements, drains, and necessary connections and fittings. Equipment and component parts shall be the standard product of the filter manufacturer to ensure prompt and continuing service and delivery of repair or maintenance parts and shall be standard with the engine manufacturer. Component parts of the unit need not be the product of the same manufacturer. Each filter shall be capable of removing not less than 95 percent of all particles larger than 5 microns. Provide each filter with not less than 2 filter elements and capable of filtering 5 gpm of fuel oil. Filter elements shall be factory-assembled type, with compression type end seal gaskets at top and bottom and with suitable pullout device. Filter material shall be cellulose, laminated fiber discs, or acid resistant textile material. Elements shall be designed for an initial pressure drop not in excess of 5 psi at a flow rate of 1.5 gpm per element. Construct filters with sides having double walls. Install insulating material between the inner and outer walls. Inner shell shall be pressed steel or welded steel construction enclosing, supporting, and protecting all elements. Filters shall have flanged, removable bolted top cover for access to all components without disconnecting any connections or fittings. Provide compartments for clean and dirty oil. Provide supports for base mounting. There shall be tie-bolts, or equivalent means, for holding down the filter elements and cover, and recesses or other means for receiving and locating the elements. Design and construction shall conform to the ASME BPVC SEC VIII D1. Filter cover shall be steel and secured to the shell by swing-type bolts with hex nuts. Use lifting devices with integral supports for covers weighing over 30 pounds. Arrange connections so that filter elements may be removed without breaking outside connections. Mount pressure gages on filter shell to indicate pressure before and after the filter elements. Provide a tapped drain and exterior valved pipe connection. A duplex gage may be provided. Gages shall conform to ASME B40.1 and shall be pressure detecting class, 4.25 inch size, and 0 to 100 psi range. Provide a needle valve and fittings for mounting each gage and differential pressure switch. Equip each unit with instruction plates and diagrams, suitably located, describing special or important procedures to be followed in operating and servicing the equipment. Plates shall be copper or zinc base alloy, adequately secured to the unit. Provide an adjustable pressure switch with contacts suitable for the station battery voltage to indicate high differential fuel-oil filter pressure.

K. Fuel Oil Cooler:

1. Install fuel oil cooler as indicated on the Drawings in the return line following generator discharge prior to the daytank return. One fuel oil cooler shall be provided per generator. The fuel oil coolers shall provide 2,500 buth of heat rejection at 5 gpm nominal flow of fuel oil and shall have a pressure drop of 3 psi

or less. Fuel oil cooler shall be provided with 1/3 hp, 115 volt, 1 phase, 60 Hz motor, in accordance with electrical specifications. Contractor shall verify fuel oil cooler requirements with generator manufacturer and may revise selection if generator manufacturer recommends a cooler with greater performance.

L. Return Oil Pumps (ROP-1, ROP-2)

1. General: Provide 2 fuel oil return pumps per day tank as indicated on the Drawings. Design pumps for continuous service for use with (No. 2) fuel oil to transfer fuel from day tank to new AST-01. Pump capacity shall be 1.5 times greater than fuel oil supply pump. Pump shall be located on the tank.
2. Performance: Refer to project drawings for additional performance data not listed here:

    a. Design Temperature (deg. F): 120°F
    b. Inlet Viscosity for Flow Capacity (SSU): 60
    c. Inlet Viscosity for Driver HP Selection (SSU): 60
    d. Specific Gravity of Oil for Design: 0.86
    e. Minimum Suction Lift Requirement (FT H20): 20
    f. Pump Speed (rpm): 1200 rpm

3. Type and Construction:

    a. Positive displacement, rotary screw type. Pump integrity shall be rated for 300 psig at 360°F.
    b. Pump casing shall be cast steel.
    c. Rotor housing shall be pearlitic gray iron.
    d. Power rotor shall be alloy steel nitride hardened and ground.
    e. Idler rotors shall be pearlitic gray iron, induction hardened and ground.
    f. Pump internals shall be Buna N bellows mechanical seal, Buna N O-rings and external permanently grease-packed deep groove ball bearing.
    g. Each pump shall be equipped with internal relief valve to protect each pump from over pressure.
    h. Pump shall be configured with flanged axial inlet. Inlet shall conform to ANSI CL150, B16.5 R.F. Flange.

4. Pump Accessories

    a. Provide mounting, flexible coupling, and coupling guard.
    b. Provide pump internal relief valve for each pump to protect pump from over pressure. The specified set pressure is the maximum allowable set pressure to protect the piping system. The capacity of the valve shall correspond to the flow rate of the proposed pump at the set pressure.

5. Pump Arrangement

    a. Equipment shall be arranged such that all equipment is accessible and maintainable. Equipment shall be configured such that no piping shall have to be disassembled to remove pump and motor.

6. Motor: The motor shall be provided by the pump manufacturer. The motor shall 208V/60Hz/3-phase. The motor shall be of adequate size to drive equipment and perform the specified duty, but in no case shall the nominal motor size be less than the minimum size indicated. Motor shall have a service factor of 1.15 with a maximum temperature rise of 115 deg C, based on a 40 deg C ambient temperature. The motor shall have the following features:

    a. Voltage: 208 V.
    b. AC squirrel cage, induction electric motor, TEFC conforming to NEMA B design standards.
    c. Motor shall be premium efficiency with minimum power factor of 0.90.
    d. Motor shall have NEMA 4 cable box. Box shall be oversized, S type diagonally split and rotatable in 90 degree increments allowing cable entry from top, bottom and sides. Motor leads shall be a minimum of six (6) inches.
    e. Motor shall be suitable for continuous duty.
    f. Rotor bars shall be fabricated copper or copper alloy bars; high frequency induction - braced to centrifugally cast copper or copper alloy resistance rings.
    g. Provide a drain and breather hole in the bottom of the motor at the lowest point.
    h. The motor casing shall be cast iron and shall be prime painted inside and outside with rust inhibitive primer and corrosion resistant paint that is commonly used on motors for indoor applications or as recommended by pump manufacturer. Aluminum motor casing shall not be accepted.

M. Interconnecting Piping: ASTM A 53/A 53M, black steel, Schedule 40, Type E or S, Grade B.

1. Malleable-Iron Threaded Fittings: ASME B16.3, Class 150, standard pattern.
2. Wrought-Steel Welding Fittings: ASTM A 234/A 234M, for butt and socket welding.
3. Unions: ASME B16.39, Class 150, malleable iron with brass-to-iron seat, ground joint, and threaded ends.
4. Cast-Iron Flanges and Flanged Fittings: ASME B16.1, Class 125.
5. Steel Welding Fittings: ASME B16.9, wrought steel or ASME B16.11, forged steel.
6. Steel Threaded Fittings: ASME B16.11, forged steel with threaded ends according to ASME B1.20.1.
7. Forged-Steel Flanges and Flanged Fittings: ASME B16.5, minimum Class 150, including bolts, nuts, and gaskets of the following material group, end connections, and facings:

    a. Material Group: 1.1.
    b. End Connections: Threaded or butt welding to match pipe.
    c. Lapped Face: Not permitted underground.
    d. Gasket Materials: Asbestos free, ASME B16.20 metallic, or ASME B16.21 nonmetallic, gaskets compatible with fuel oil.
    e. Bolts and Nuts: ASME B18.2.1, cadmium-plated steel.

N. Relief Valves: Relief valves shall meet ANSI requirements.

O. Pump Skid Base: Base shall be made of all welded construction utilizing standard AISC

steel shapes.

P. Electrical Requirements: Powered from Day Tank Control Panel

1. Environmental Conditions: All control/electrical components shall be suitable for temp range of 0°F to 120°F (5° - 40°C).

Q. Painting: Piping and Base shall be primed and finish painted in accordance with generator and base tank manufacturer's standards.

## 2.07 ENGINE EXHAUST SYSTEM

A. Exhaust silencer: Critical type, sized as recommended by engine manufacturer with 25dBA minimum sound attenuation.

B. Exhaust Silencers: Furnish silencer that meets the following performance requirements:

1. Application: Radial, critical grade, low radiated heat, industrial type, sized as recommended by engine manufacturer, suitable for low background noise environment. Silencers shall have a high temperature corrosion-resistant coating and a stainless steel bellows type flexible exhaust fitting at least 18 inches long. Silencers shall be a dual bottom inlet, and a single end exhaust. Measured sound level at a distance of 25 feet in the 20 to 75 Hertz frequency band from exhaust discharge, is 87 dBA or less.
2. Construction: Welded heavy-duty steel, double shell, with compressed thermal acoustical insulation within shells. Standard 125/150 # ANSI flanged inlets and outlet.
3. Thermal Performance:

   a. Maximum insulation surface temperature reduction: 70%

4. Finish: High heat silicon black or aluminum.
5. Restrictions: Contractor shall mount silencers as indicated on the Drawings to prevent improper operation.
6. Muffler Performance Requirements:

| | | |
|---|---|---|
| a. | Inlet Connections: | Two 8" |
| b. | Outlet Connections: | One 16" |
| c. | Maximum Height: | 27" |
| d. | Diameter: | 54" |
| e. | Typical Sound Attenuation: | 25-33 dBA |
| f. | Maximum Allowable Pressure Drop: | 10" W.G. |

C. Size silencer and piping system to ensure that measured exhaust back pressure does not exceed maximum limitations recommended by unit manufacturer; minimum size shall be at least one size larger than that shown in manufacturer's literature.

D. Condensate Drain for silencer: Schedule 40, black steel pipe connected to silencer drain

outlet through a full port ball valve.

E. Connection from Engine to Exhaust System: Flexible section of corrugated stainless-steel pipe.

F. Connection from Exhaust Pipe to Silencer: Stainless-steel expansion joint with liner.

G. Contractor shall install test ports to allow insertion of emission-measuring probes in specified sections of the exhaust piping.

H. Expansion (flexible) joints: Provide sections of multiple corrugated stainless steel expansion joints with liners in the engine exhaust piping for each engine to absorb expansion strains and vibration transmitted to the piping. Flexible joints shall be suitable for operation at 200 degrees F above normal exhaust gas temperature at 110 percent load. Air intake expansion joints shall be as specified for the exhaust piping or may be metal reinforced rubber type suitable for the service. Air intake expansion joints may be for plain end pipe.

I. Exhaust piping: Provide piping for each engine complete with necessary fittings, flanges, gaskets, bolts, and nuts as specified in Division 15 Section “Breechings, Chimneys, and Stacks.”

## 2.08 CRANKCASE PROTECTION

A. Provide manufacturer's standard method of preventing crankcase explosions. System shall be complete with required appurtenances. System shall provide a positive vacuum or pressure on the crankcase. If air is discharged from crankcase by means of a pressure blower, provide an oil separator in the system. Vapor discharge shall be carried to outdoors via piping.

## 2.09 COMBUSTION-AIR INTAKE

A. Air filter: Heavy-duty, engine-mounted air cleaner with replaceable dry-filter element.

B. Indication: Provide differential pressure gauge with maximum recommended differential pressure clearly marked in red.

C. Controls: SPDT contacts from engine control panel to initiate opening of combustion air damper.

## 2.10 STARTING SYSTEM

A. Responsibility:

1. Generator Manufacturer shall provide all genset starting system equipment required for a complete installation and supervise installation of system.
2. Electrical Work Contractor shall install genset starting equipment and provide piping from compressed air system to gensets. Electrical Work Contractor shall

also be responsible for the provision and installation of all valves and piping fittings external to the compressed air starting system.

B. Design: Generator Manufacturer shall be responsible for selecting a complete compressed air starting system that is compatible with supplied generator within the specified clearances given on the Drawings and provides sufficient start capabilities for the generator. One compressed air start system shall be provided per engine.

C. Description: Compressed air supply for the Air Start system shall be provided as specified in Division 23.

D. Unit Mounted Air Starter Assembly: The generator manufacturer shall provide a unit mounted air motor to start the engine. The air supply system specified elsewhere has been designed to provide 90 PSIG compressed air to the following air motor basis of design. Selection of a different air motor will require adjustment of the air supply system and shall be the responsibility of the Electrical Work contractor. Design criteria used for basis of design is as follows:

1. Basis of Design: MTU 2000kW; TDI Turbotwin Model T50-P 14 Nozzle
2. Inlet atmospheric conditions:

    a. Elevation: 161 feet above mean sea level
    b. Air temperature: 104 degrees F. maximum; 50 degrees F minimum.
    c. Relative humidity: 80 percent at 104 degrees F

3. Torque at pinion speed: 75 Ft-Lbs
4. Pinion speed required to start: 2000 RPM
5. Gear Ratio: 182 Teeth On Generator; 11 On Air motor (16.5:1)
6. Regulated air pressure to starter: 90 PSIG
7. Max air pressure to starter: 120 PSIG
8. Minimum ambient start temperature: 32 deg F
9. Maximum pressure capability of the compressor: 250 PSIG
10. Maximum tank pressure: 150 PSIG
11. Minimum air pressure to motor: 90 PSIG
12. Free air consumption w/ 90 PSIG Supply: 28.3 cu. ft/sec
13. Service: Hours of operation per year shall be determined by the engine manufacturer. Compressor will be installed in heated area that shall never fall below 50 degrees F. The compressors shall be designed for rigorous cycling operation.

E. Starting Valve

1. As selected and required by the Generator Manufacturer.

F. Pressure Regulator

1. Provide a pressure regulating valve to regulate the air pressure from the receiving tanks. The regulating valve shall be suitable for an air medium with the following properties:

a. Carbon Steel Body
b. Bronze Piston and Cylinder
c. Maximum Inlet pressure: 250 psig
d. Operating Inlet Pressure: 225 psig
e. Field adjustable outlet pressure with a range that shall include 40 psig to 250 psig and shall be initially set at 225 psig.
f. Valve shall be a single seated, spring loaded, direct acting diaphragm valve.
g. Maximum Inlet Temperature is 135 deg F.
h. Air Operating flow: to match compressor.

G. Oiler

1. As selected and required by the Generator Manufacturer. Not required for basis of design.

## 2.11 ENGINE-GENERATOR SET CONTROL PANEL

A. Enclosure and Mounting: NEMA 250, Type 1, unit-mounted cabinet. 24VDC control power will be supplied for all engine control circuits from the station battery system.

B. Provide a microprocessor-based generator control panel with features and functions as specified below.

C. The generator set control panel shall include all interfaces necessary for proper operation with the generator paralleling controls specified for this project.

D. Functional Description: When mode selector switch on the engine-generator set control panel is in the AUTOMATIC position, remote control contacts close to initiate starting and stopping the generator set after a cool-down period. When mode selector switch is switched to ON, the generator set starts. The OFF position of the same switch initiates generator set shutdown with engine cool-down period. During generator set operation, equipment failures automatically shut down the generator set and initiate alarms. Operation of the remote EMERGENCY STOP pushbutton shuts down the generator set without an engine cool-down period.

E. Configuration: Operating and safety indications, protective devices, basic system controls, and engine gages shall be grouped in a common engine-generator set control panel mounted on the engine-generator set. Mounting method shall isolate the control panel from generator set vibration.

F. Indicating and protective devices and controls shall include those required by NFPA 110 for a Level 1 system, and the following:

1. AC voltmeter.
2. AC ammeter.
3. AC frequency meter.
4. DC voltmeter (alternator battery charging).

5. Engine-coolant temperature gage.
6. Engine lubricating-oil pressure gage.
7. Running-time meter.
8. Ammeter-voltmeter, phase-selector switch(es).
9. Generator-voltage adjusting rheostat.
10. Overspeed shutdown device.
11. Coolant high-temperature shutdown device.
12. Coolant low-level shutdown device.
13. Oil low-pressure shutdown device.
14. Fuel tank derangement alarm.
15. Fuel tank high-level shutdown of fuel supply alarm.

G. Supporting Items: Include sensors, transducers, terminals, relays, and other devices and include wiring required to support specified items. Locate sensors and other supporting items on engine or generator, unless otherwise indicated.

H. Communications: The generator set controller shall have the capability to communicate with external or remote devices using the following connections:

1. Single connection to a remote PC using RS-232/RS-485 protocol.
2. Communicate to remote generator paralleling control system over a network using the Modbus RTU or Modbus TCP/IP over Ethernet protocol.

I. Remote Alarm Annunciator: Comply with NFPA 99 & 110. Labeled LED shall identify each alarm event. Common audible signal shall sound for alarm conditions. Silencing switch in face of panel shall silence signal without altering visual indication. Connect so that after an alarm is silenced, clearing of initiating condition will reactivate alarm until silencing switch is reset. Cabinet and faceplate are surface- or flush-mounting type to suit mounting conditions indicated. Provide one annunciator for each genset in the location shown on the Drawings.

## 2.12 GENERATOR OVERCURRENT AND FAULT PROTECTION

A. Overcurrent Protection: Controls shall be provided to monitor the output current of the generator set and initiate an alarm (overcurrent warning) when load current exceeds 110% of the rated current of the generator set on any phase for more than 60 seconds. The controls shall shut down and lock out the generator set when output current level approaches the thermal damage point of the alternator (overcurrent shutdown). The protective functions provided shall be in compliance to the requirements of NFPA70 Article 445.

B. Short-Circuit Protection: Controls shall be provided to individually monitor all three phases of the output current for short circuit conditions. The control/protection system shall monitor the current level and voltage. The controls shall shut down and lock out the generator set when output current level approaches the thermal damage point of the alternator (short-circuit shutdown). The protective functions provided shall be in compliance to the requirements of NFPA70 Article 445.

C. Load Shed Protection: Controls shall be provided to monitor the KW load on the

generator set, and initiate an alarm condition (over load) when total load on the generator set exceeds the generator set rating in excess of five seconds. The controls shall include a load shed control to operate a set of dry contacts (for use in shedding customer load devices) when the generator set is overloaded.

D. AC Over/Undervoltage Protection: An AC over/undervoltage monitoring system that responds only to true RMS voltage conditions shall be provided. The system shall initiate shutdown of the generator set when alternator output voltage exceeds 110% of the operator-set voltage level for more than 10 seconds, or with no intentional delay when voltage exceeds 130%. Under voltage shutdown shall occur when the output voltage of the alternator is less than 85% for more than 10 seconds.

E. Generator Differential Protection: Provide line-side and neutral-side CT's mounted inside the generator terminal box by the generator manufacturer. Wire the differential CT's to the solid state differential relay provided under Section 261313. Coordinate with switchgear manufacturer so same make and model CTs are provided on both end of the differential circuit.

## 2.13 GENERATOR, EXCITER, AND VOLTAGE REGULATOR

A. Comply with NEMA MG 1 and specified performance requirements.

B. Drive Coupling: Generator shaft shall be connected to the engine flywheel by means of a flexible steel coupling. Exciter shall be mounted on the generator rotor.

C. Windings: Provide winding pitch stator with one slot skew to eliminate slot harmonics, and fully linked amortisseur winding.

1. Stator-Winding Leads: Bring out both ends of each winding to terminal box to permit installation of differential current transformers. Generator leads shall be terminated at insulated copper busbars with NEMA standard drilling.
2. Provide two embedded resistance temperature detectors per phase, with temperature indication at the generator control panel. The control system shall annunciate high alternator temperature as a fault condition.

D. Subtransient Reactance: 14% maximum.

E. NEMA MG 1 Generator Insulation Class: Class F minimum.

F. NEMA MG 1 Full-Load Operating Temperature Rise at 40 deg. C Ambient: Class B maximum, rated on a continuous duty basis at the generator's prime output rating. Class F maximum, rated on a standby duty basis at the generator's standby output rating.

G. Excitation: Brushless rotating exciter. Sustain generator output performance under short-circuit conditions as specified.

H. Exciter DC power supply: Permanent magnet DC generator in-line coupled to generator shaft.

I. Overspeed: Generator construction shall prevent mechanical, electrical, and thermal damage up to 125 percent of base speed.

J. Enclosure: Open drip-proof, fully guarded, with stainless steel insect screens.

K. Current Transformers (CT's): Provide ANSI "C" accuracy class CT's, ratios, quantities, and locations as indicated on the single-line diagram.

L. Surge Protection: Provide lightning arrestors and surge capacitors located as close as possible and connected to each phase terminal of the generator, connected phase-to-ground, with the following features and ratings:

1. Enclosure: The medium voltage generator surge protector shall be housed in a NEMA 12, 11 gauge steel, all-welded enclosure. The enclosure shall be suitable for overhead mounting with trapeze-style channel supports.

   a. The enclosure shall be equipped with a hinged door for maintenance and termination. The hinged door shall bolt closed with two 3/8"x16 stainless steel bolts. The hinges shall be stainless steel. The door shall be removable when in the open position.
   b. High voltage warning signs and a nameplate showing rating information shall be located on the front of the enclosure.
   c. The enclosure shall accept bottom or top cable entry.
   d. The enclosure shall be factory mounted inside the generator enclosure, suspended from the ceiling above the generator, by the enclosure manufacturer.

2. Surge Capacitors: A low inductance three phase, all-film surge capacitor shall be provided for decreasing the slope of impending voltage surges. The capacitor shall be rated 0.125 micro-farads to ground and have a 4.16kV voltage rating.

   a. The capacitor shall be equipped with discharge resistors that reduce the capacitor voltage to 50 volts in 5 minutes when disconnected from the source.
   b. The surge capacitor shall be capable of operating in the temperature range between -40 deg. F and +115 deg. F.

3. Lightning Arrestors: Provide three station-class lightning arresters with a maximum continuous operating voltage (MCOV) greater than the generator rated line-to-line voltage. The lightning arrestors shall meet ANSI/IEEE C62.11 standards.
4. Provide current limiting fuses mounted inside the enclosure for fault protection of the surge protection assembly.
5. The surge protection assembly shall be factory wired to the generator terminals by the enclosure manufacturer. Provide 15kV EPR-insulated cable for all power connections, and THHN insulated cable for all ground connections.

M. Voltage Regulator: Solid-state type, three phase true RMS voltage sensing, providing specified performance.

1. The voltage regulation system shall include provisions for reactive load sharing and electronic voltage matching for paralleling applications. Motorized voltage adjust potentiometer is not acceptable for voltage matching.

N. Winding Heaters: Thermostatically controlled, 120VAC strip or rod heaters sized and controlled to maintain stator windings above dew point when the generator is not running. Turn off when engine is running. Heaters shall be operated at half normal voltage for long life.

## 2.14 FINISHES

A. Indoor Enclosures and Components: Manufacturer's standard enamel over corrosion-resistant pretreatment and compatible standard primer.

## 2.15 SOURCE QUALITY CONTROL

A. Prototype Testing: Factory test engine-generator set using same engine model, constructed of identical or equivalent components and equipped with identical or equivalent accessories.

1. Tests: Comply with NFPA 110, Level 1 energy converters in Paragraphs 3.2.1, 3.2.1.1, and 3.2.1.2.
2. Generator Tests: Comply with IEEE 115.
3. Components and Accessories: Items furnished with installed unit that are not identical to those on tested prototype shall have been factory tested to demonstrate compatibility and reliability.

B. Project-Specific Equipment Tests: Before shipment, factory test engine-generator set and other system components and accessories manufactured specifically for this Project. Perform tests at rated load and power factor. Include the following tests:

1. Preparation: The unit shall be completely assembled and all preliminary adjustments made before the factory test is initiated.

   a. Run unit long enough to assure the unit is running properly.
   b. A suitable muffler and radiator, if available at the test site, may be used for the factory test in lieu of delivering the project muffler and radiator to the test site.

2. Two representatives of the State shall witness factory test of the diesel-alternator unit.

   a. Notify the Director’s Representatives at least 2 weeks in advance of test.
   b. Have sketch or diagram available showing how test equipment is connected, including metering, pt’s, ct’s, and power transformers (if used).
   c. Have metering located so that they are easily observable.

3. The object of the factory test is to determine:

a. The net power output.
b. Fuel consumption.
c. That the diesel-alternator operational functions are within specified parameters.
d. That alternator temperature rise does not exceed specified limit (test at .8 PF).

4. Schedule of Tests:

a. Test diesel-alternator unit at .8 PF in the following sequence:

1) 1/2 hour at half load.
2) 1/2 hour at 3/4 load.
3) 2 hours at full load.
4) 2 hours at 110 percent full load.
5) 1 hour at full load.

b. Run each load test segment continuously. Run all load test segments consecutively with no stops or delays between each test segment.

5. Measurements, Observations and Data:

a. Provide the following information:

1) Barometric pressure.
2) Intake air temperature.
3) Speed in revolutions per minute.
4) Frequency in cycles per second.
5) Output voltage (per phase).
6) Output amperes (per phase).
7) Power factor.
8) Gross kilowatts output.
9) Gross kilowatt-hours during test period.
10) Temperature of alternator windings at full load and 110 percent full load.
11) Fuel rate (gph).
12) Fuel characteristics (weight per gal & BTU/lb).

b. Before each test, bring the engine to a steady state under the condition of the test. The attainment of steady state is to be determined by readings which are to be made part of the record.
c. During each test period, take readings and record results at the beginning and end of test and at 15 minute intervals during test.
d. Demonstrate that:

1) Unit maintains precise isochronous control.
2) Voltage regulation and transient voltage dip are within specified parameters.
3) Stable alternator operating conditions are reestablished within

specified parameters between no load/full load.

e. Perform tests under the supervision of a factory engineer.
f. Submit factory test report for approval. Do not ship unit to site until final approval is received.

## 2.16 SPARE PARTS AND SPECIAL TOOLS

A. Furnish extra materials described below that match products installed and that are packaged with protective covering for storage and identified with labels describing contents.

1. Fuses: One for every 10 of each type and rating, but not less than six of each.
2. Indicator Lamps: Not less than ten of each type.
3. Filters: Two sets each of lubricating oil, fuel, and combustion-air filters.
4. Engine-driven belts.
5. Two sets of gaskets for routine engine maintenance.
6. Two spare heating elements for water jacket heater. Furnish spare water jacket heater if elements are not replaceable.
7. Set of oil filter elements.
8. Set of fuel filter elements.
9. Set of air cleaner elements.
10. Hydrometer for testing anti-freeze solution.
11. Test kit for checking chemical condition of coolant.
12. One year supply of coolant conditioner.
13. Special tools if required for the regular maintenance and minor repairs of the unit.

B. The Contractor shall deliver the spare parts listed above to the Director's Representative at the project site, at a date and time of the Director's Representative's choosing. The Contractor shall deduct the cost of all items that are undelivered due to loss or damage.

# PART 3 - EXECUTION

## 3.01 INSTALLATION PREREQUISITES

A. Examine areas, equipment bases, and conditions, with Installer present, for compliance with requirements for installation and other conditions affecting generator set performance.

B. Examine roughing-in of piping systems and electrical connections. Verify actual locations of connections before generator set installation.

C. Proceed with installation only after unsatisfactory conditions have been corrected.

## 3.02 CONCRETE BASES

A. Coordinate dimensional requirements for concrete bases, inserts, and stub-ups with generator set manufacturer.

B. Concrete base requirements are specified in Division 3, and as shown on the Structural Drawings.

## 3.03 DELIVERY, STORAGE, AND HANDLING

A. Deliver, store, and handle generator sets and accessories in accordance with manufacturer’s instructions.

## 3.04 INSTALLATION

A. Comply with generator set manufacturers' written installation and alignment instructions and with NFPA 110.

B. Install generator assembly level on concrete base using manufacturer-provided vibration isolators.

C. Install exhaust-system piping in accordance with Division 23, Section “Breechings, Chimneys, and Stacks.” Extend to point of termination outside structure with vertical discharge of exhaust pipe and rain cap. Size piping according to manufacturer's written instructions.

1. Install condensate drain piping for engine exhaust system. Extend drain piping from low points of exhaust system and from silencer to condensate traps and to point of disposition.
2. Support exhaust piping and silencer in accordance with Division 23 Section “Breechings, Chimneys, and Stacks.:
3. Provide vertical discharge of exhaust pipe with rain cap.

D. Electrical Wiring: Install and wire electrical devices furnished by equipment manufacturers but not specified to be factory wired.

E. Diesel Fuel:

1. The facility shall pay for delivery of fuel required for testing.
2. Coordinate with the Facility thru the Director’s Representative to provide diesel fuel as required to initially fill the fuel storage tank and day tank before commencing the preliminary system test.
3. Upon completion of all tests coordinate with the Facility thru the Director’s Representative to provide additional diesel fuel as required to fill the fuel storage and day tank.
4. Diesel fuel shall have characteristics as recommended by the diesel-alternator unit engine manufacturer.

F. Phase Relationship: Correctly phase emergency and normal service so that motor rotation will not reverse upon transfer from normal to emergency feeder.

G. Locate fire extinguisher proximate to diesel-alternator unit.

## 3.05 CONNECTIONS

A. Piping installation requirements are specified in Division 23 Sections. Drawings indicate general arrangement of piping and specialties. The following are specific connection requirements:

1. Install fuel, cooling-system, and exhaust-system piping adjacent to packaged engine generator to allow service and maintenance.
2. Engine manufacturer shall connect cooling-system water supply and drain piping to engine heat exchangers. Install flexible connectors at connections in accordance with manufacturer's recommendations.
3. Connect fuel piping to engines with a ball valve and union.
4. Connect exhaust-system piping to engines.

B. Provide generator and enclosure grounding connections according to Division 26 Section "Grounding and Bonding."

C. Connect power wiring according to Division 26 Sections "Medium-Voltage Cable" and "Wire and Cable."

D. Tighten electrical connectors and terminals according to manufacturer's published torque-tightening values. If manufacturer's torque values are not indicated, use those specified in UL 486A and UL 486B.

## 3.06 IDENTIFICATION

A. Identify system components according to Division 26 Section "Electrical Identification."

## 3.07 PREPARATION FOR ACCEPTANCE TESTING

A. Inspect completed generator set installation, including all auxiliary systems, piping, power and control wiring, and electrical terminations for proper installation in compliance with this Specification and all applicable codes, regulations and proper means and methods of construction. Report results in writing.

B. Complete installation and pre-startup checks according to manufacturer's written instructions.

C. In conjunction with the site load testing requirement listed below, provide temporary 13.2kV resistive/reactive load banks and cables equal to the standby kVA rating (2500kVA) at 0.8 power factor for both generator sets. Provide adequate space at project

site for locating load bank as close as possible to the installed paralleling switchgear location to minimize cable lengths.

## 3.08 ACCEPTANCE TESTING

A. Manufacturer's Field Service: Engage a factory-authorized service representative to inspect, test, and adjust field-assembled components and equipment installation, including connections, and to perform acceptance testing. Report results in writing.

1. Perform each electrical test and visual and mechanical inspection stated in NETA ATS, Section "Emergency Systems, Engine Generator." Certify compliance with test parameters.
2. Perform all tests stated in the manufacturer's written tests recommendations.
3. NFPA 110 Acceptance Tests: Perform tests required by NFPA 110 that are additional to those specified here including, but not limited to, the following:

    a. Four hour full load test for each genset.
    b. Single-step full-load pickup test for each genset.
    c. Test parallel operation of both generators for one hour with load beginning at 50% total full-load (1407kVA) for a minimum of 1 hour, increasing to 75% total full-load (2110kVA) for a minimum of 1 hour, and finishing with 100% total full-load (2813kVA) for a minimum of 1 hour. Verify proper real and reactive load sharing between generator sets and record results.
    d. Test parallel operation with utility for closed-transition switching.

4. System Integrity Tests: Methodically verify proper installation, connection, and integrity of each element of engine-generator system before and during system operation. Check for air, exhaust, and fluid leaks.
5. Exhaust-System Back-Pressure Test: Use a manometer with a scale exceeding 40-inch water gauge. Connect to exhaust line close to engine exhaust manifold. Verify that back pressure at full-rated load is within manufacturer's written allowable limits for the engine.
6. Voltage and Frequency Transient Stability Tests: Use recording oscilloscope to measure voltage and frequency transients for 50 and 100 percent step-load increases and decreases, and verify that performance is as specified.
7. Harmonic-Content Tests: Measure harmonic content of output voltage under 25 percent and at 100 percent of rated linear load. Verify that harmonic content is within specified limits.
8. Noise Level Tests: Measure A-weighted level of noise emanating from generator set installation, including engine exhaust and cooling-air intake and discharge, at a distance 3.3 ft from each side of the generator enclosure, except the side facing the prison perimeter wall, and compare measured levels with required values.

B. Coordinate tests with tests for paralleling controls in switchgear and run them concurrently.

C. Test instruments shall have been calibrated within the last 12 months, traceable to standards of the National Institute for Standards and Technology, and adequate for making positive observation of test results. Make calibration records available for

examination on request.

D. Test and adjust controls and safeties. Replace damaged and malfunctioning controls and equipment.

E. Retest: Correct deficiencies identified by tests and observations and retest until specified requirements are met.

F. Report results of tests and inspections in writing. Record adjustable relay settings and measured insulation resistances, time delays, and other values and observations. Attach a label or tag to each tested component indicating satisfactory completion of tests.

## 3.09 DEMONSTRATION AND TRAINING

A. Engage a factory-authorized service representative to train maintenance personnel to adjust, operate, and maintain generator sets. The training period shall be no less than two eight-hour training sessions.

1. Coordinate this training with training for paralleling switchgear controls.

**END OF SECTION 263215**

| | | | | | | | | | | |
|---|---|---|---|---|---|---|---|---|---|---|
| | | | PRESSURE CONTROL VALVES<br>PILOTS AND REGULATORS | | | | SHEET 1 OF 1 | | | |
| | | | NO | BY | DATE | REVISION | SPEC. NO. 231220 | | REV. 1 | |
| | | | | | | | CONTRACT 42535-E | | DATE 2/19/2013 | |
| | | | | | | | REQ. - P.O. | | | |
| | | | | | | | BY JEB | CHK'D GSC | APPR. GSC | |

| | | | | | | | | | | |
|---|---|---|---|---|---|---|---|---|---|---|
| GENERAL | 1 | Tag Number | | BPCV-13011 | | | | | | |
| | 2 | Service | | FUEL OIL | | | | | | |
| | 3 | Line Number / Vessel Number | | | | | | | | |
| | 4 | Line Size / Sched. Number | | 1-1/2" / SCH 40 | | | | | | |
| | 5 | Function | | BACK PRESS. REG. | | | | | | |
| BODY | 6 | Type of Body | | MFG.STD | | | | | | |
| | 7 | Body Size | Port Size | 3/4" | | | | | | |
| | 8 | Guiding | No. of Ports | MFG.STD | 2 | | | | | |
| | 9 | End Conn. & Rating | | FEMALE NPT CL 2000 | | | | | | |
| | 10 | Body Material | | CAST CARBON STEEL | | | | | | |
| | 11 | Packing Material | | | | | | | | |
| | 12 | Lubricator | Iso. Valve | | | | | | | |
| | 13 | Seal Type | | | | | | | | |
| | 14 | Trim Form | | S3 | | | | | | |
| | 15 | Trim Material | | | | | | | | |
| | 16 | Seat Material | | | | | | | | |
| | 17 | Required Seat Tightness | | | | | | | | |
| | 18 | Max. Allow Sound Level dBA | | | | | | | | |
| ACTUATOR/ PILOT | 19 | Type of Actuator | | DIAPHRAGM | | | | | | |
| | 20 | Pilot | | INTERNAL | | | | | | |
| | 21 | Supply to Pilot | | UPSTREAM PRESSURE | | | | | | |
| | 22 | Self Cont. | Ext. Conn. | YES | | | | | | |
| | 23 | Diaphragm Material | | | | | | | | |
| | 24 | Diaphragm Rating | | NEOPRENE | | | | | | |
| | 25 | Spring Range | | 20-45 | | | | | | |
| | 26 | Set Point | | 40 PSIG | | | | | | |
| | 27 | | | | | | | | | |
| ACCESSORIES | 28 | Filt. Reg. | Supply Gage | | | | | | | |
| | 29 | Line Strainer | | | | | | | | |
| | 30 | Housing Vent | | | | | | | | |
| | 31 | Internal Relief | | | | | | | | |
| | 32 | | | | | | | | | |
| | 33 | | | | | | | | | |
| SERVICE | 34 | FLOW UNITS | | LIQUID | | STEAM | | GAS | | |
| | 35 | Fluid | | FUEL OIL | | | | | | |
| | 36 | Quant. Max. | $C_V$ | 10 GPM | 1.4 | | | | | |
| | 37 | Quant. Oper. | $C_V$ | 10 GPM | 1.4 | | | | | |
| | 38 | Valve $C_V$ | Valve $F_L$ | 1.4 | 0.945 | | | | | |
| | 39 | Norm. Inlet Press. | $\Delta P$ | 40 | 35 | | | | | |
| | 40 | Max. Inlet Press. | | 50 | | | | | | |
| | 41 | Max. Shut Off | $\Delta P$ | | | | | | | |
| | 42 | Temp. Max. | Operating | 140 °F | 60 °F | | | | | |
| | 43 | Oper. Sp. Gr. | Mol. Wt. | 0.85 | | | | | | |
| | 44 | Oper. Visc. | % Flash | | | | | | | |
| | 45 | % Superheat | % Solids | | | | | | | |
| | 46 | Vapor Press. | Crit. Press. | | | | | | | |
| | 47 | Predicted Sound Level dBA | | | | | | | | |
| | 48 | Manufacturer | | CASHCO | | | | | | |
| | 49 | Model No. | | MODEL 123 | | | | | | |

NOTES:

© 1981 ISA

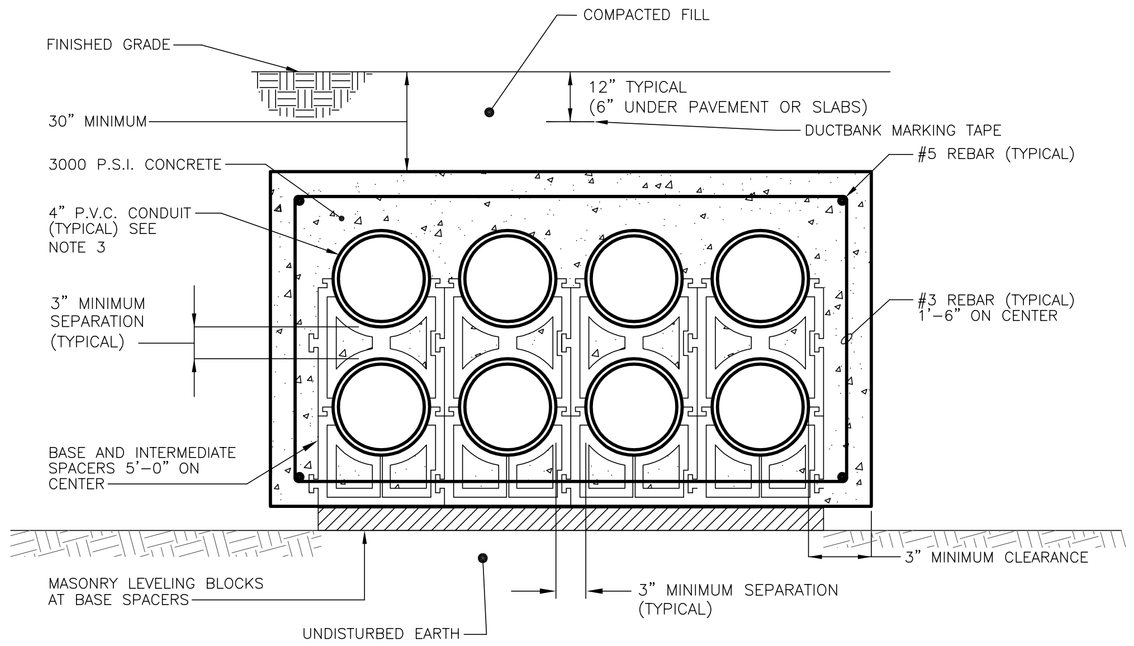


NOTES:

1. FOR DUCT BANKS WITH QUANTITY & SIZE OF CONDUITS OTHER THAN AS SHOWN, ADJUST OVERALL WIDTH & HEIGHT DIMENSIONS ACCORDINGLY.
2. EARTH CUTS WILL BE PERMITTED AS THE FORM WHERE TRENCHES ARE NEATLY EXCAVATED IN STABLE SOILS. OTHERWISE, FORM SIDES OF THE CONCRETE ENCASEMENT.
3. WITHIN TEN FEET OF BUILDINGS AND BUILDINGS AND ELECTRICAL EQUIPMENT PADS, ALL CONDUITS SHALL BE RIGID FERROUS METAL CONDUITS.

## 1 / EC4.01 CROSS SECTION OF CONCRETE ENCASED UNDERGROUND CONDUIT DUCTBANK SINGLE POUR METHOD

SCALE: NONE

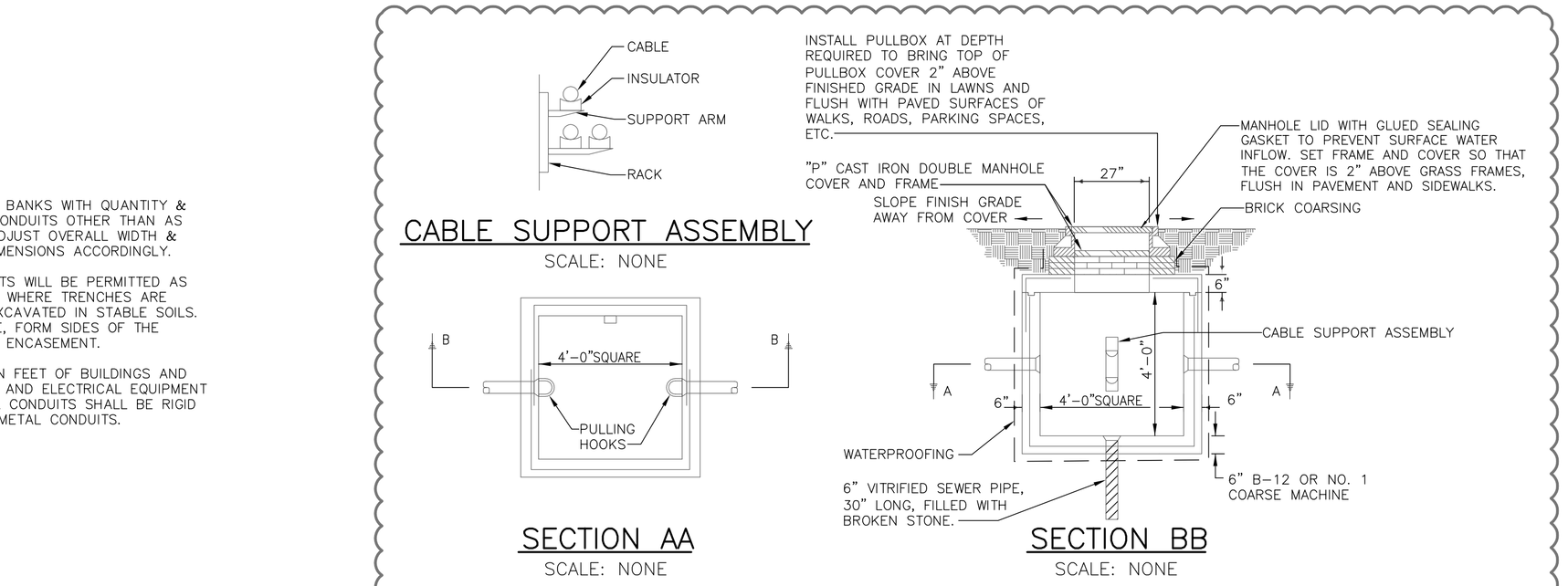


## 2 / EC4.01 4'x4'x4' PRE-CAST CONCRETE PULLBOX DETAIL

SCALE: NONE

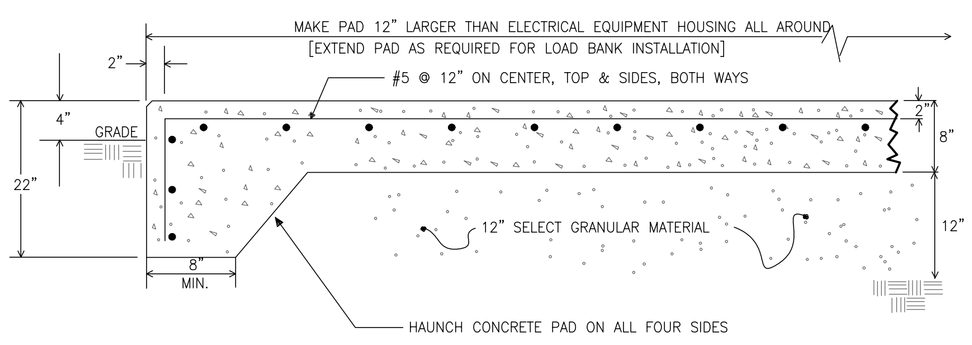


STANDARD

NOTES:

1. SEE ELECTRICAL DRAWINGS FOR PAD DIMENSIONS.
2. SEE PLAN FOR PAD ELEVATIONS.

## 3 / EC4.01 ELECTRICAL EQUIPMENT PAD DETAIL

SCALE: NONE

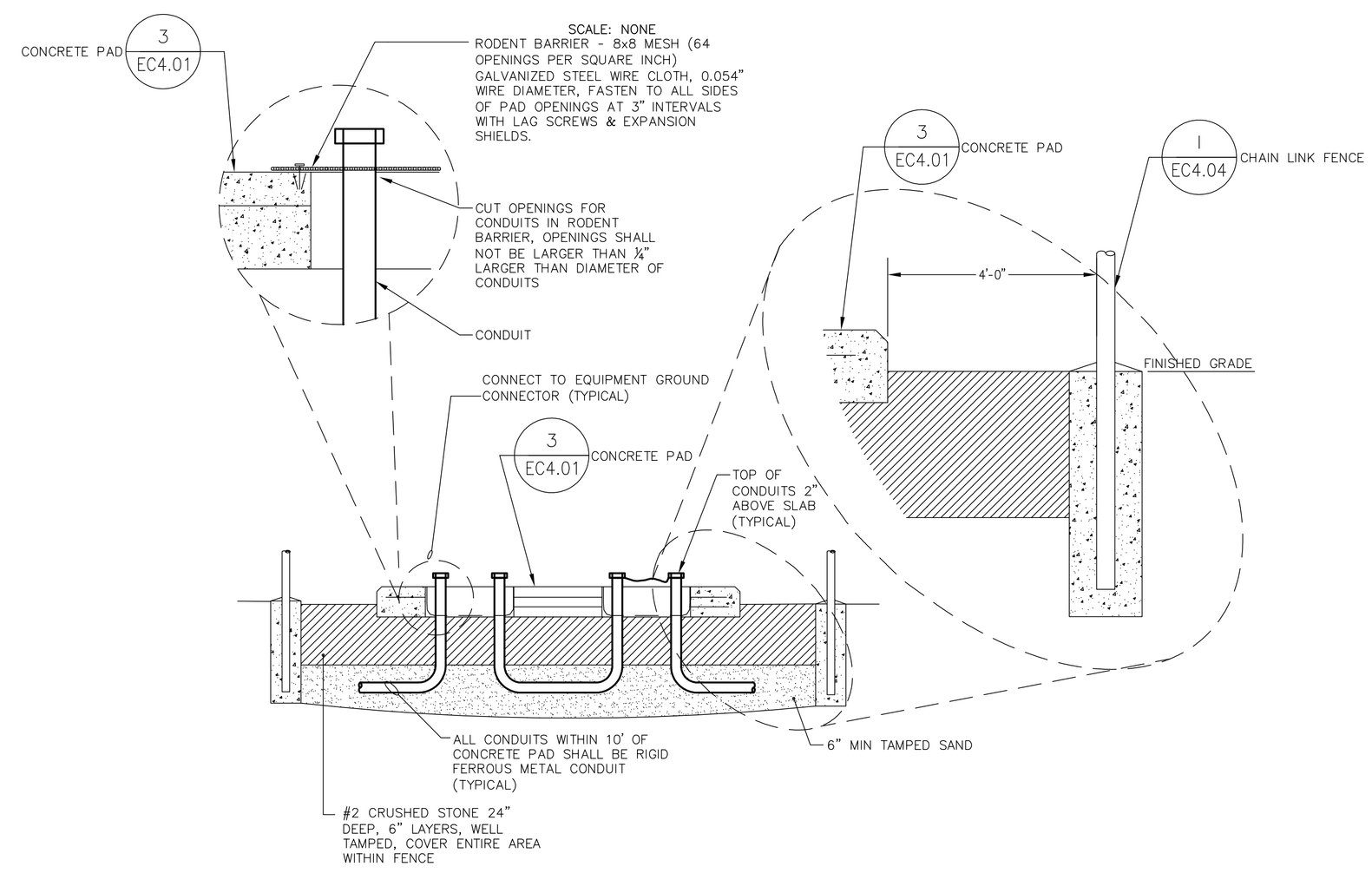


NOTE:

1. SEE DETAIL I ON DRAWING EX4.04 FOR CHAIN LINK FENCE DETAIL.

## 4 / EC4.01 ELECTRICAL EQUIPMENT INSTALLATION DETAIL

SCALE: NONE

NYS OFFICE OF GENERAL SERVICES

*Serving New York*

ANDREW M. CUOMO
Governor
ROANN M. DESTITO
Commissioner

CONSULTANT

RMF ENGINEERING, INC., P.C.
(800) 938 - 5760
ALBANY • BALTIMORE • CHARLOTTESVILLE
DURHAM • CHARLESTON • ATLANTA
BOSTON • COLUMBUS

WARNING:

THE ALTERATION OF THIS MATERIAL IN ANY WAY, UNLESS DONE UNDER THE DIRECTION OF A COMPARABLE PROFESSIONAL, I.E. ARCHITECT FOR AN ARCHITECT, ENGINEER FOR AN ENGINEER OR LANDSCAPE ARCHITECT FOR A LANDSCAPE ARCHITECT, IS A VIOLATION OF THE NEW YORK STATE EDUCATION LAW AND/OR REGULATIONS AND IS A CLASS 'A' MISDEMEANOR.

STATE OF NEW YORK · ANDREW JONATHAN JAY · No. 089313-1 · LICENSED PROFESSIONAL ENGINEER · 11/07/12

CONTRACT: ELECTRICAL

TITLE: PROVIDE ELECTRICAL UPGRADE FOR FEEDERS, TRANSFORMERS, AND SWITCHGEAR SITEWIDE.

LOCATION: GREENHAVEN CORRECTIONAL FACILITY
ROUTE 216
STORMVILLE, NEW YORK 12582

CLIENT: DEPARTMENT OF CORRECTIONAL SERVICES AND COMMUNITY SUPERVISION

| MARK | DATE | DESCRIPTION |
|---|---|---|
| 1 | 02-21-13 | ADDENDUM NO. 3 |
| – | 10-02-2012 | BID DOCUMENTS |

| | |
|---|---|
| PROJECT NUMBER: | 42535-E |
| DESIGNED BY: | DDFH |
| DRAWN BY: | DDFH |
| FIELD CHECK: | ### |
| APPROVED: | JPW |

SHEET TITLE: UTILITY DETAILS

DRAWING NUMBER: EC4.01

SHEET 081 OF 284

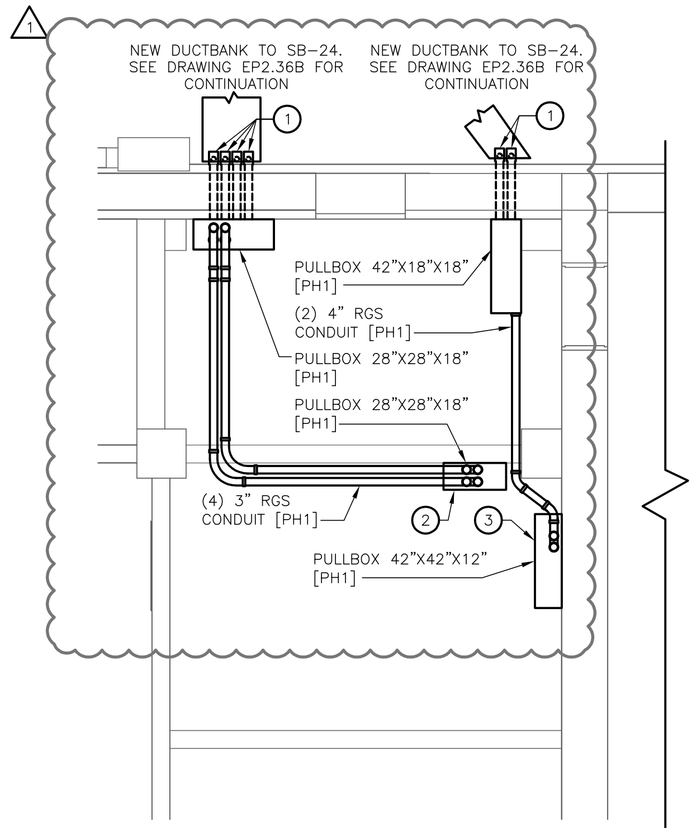


## BATTERY ROOM – PHASE 1 – NEW WORK

SCALE: 1/4" = 1'-0"

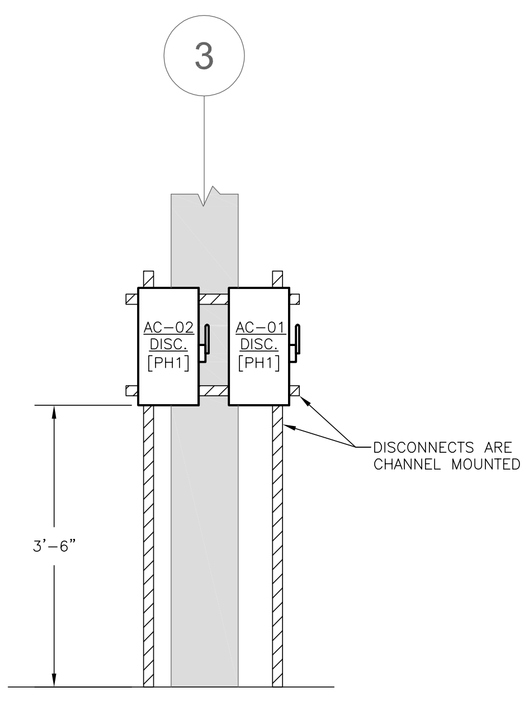


## AC-01 & AC-02 DISCONNECT ELEVATION

A EP1.12B

SCALE: 3/4" = 1'-0"

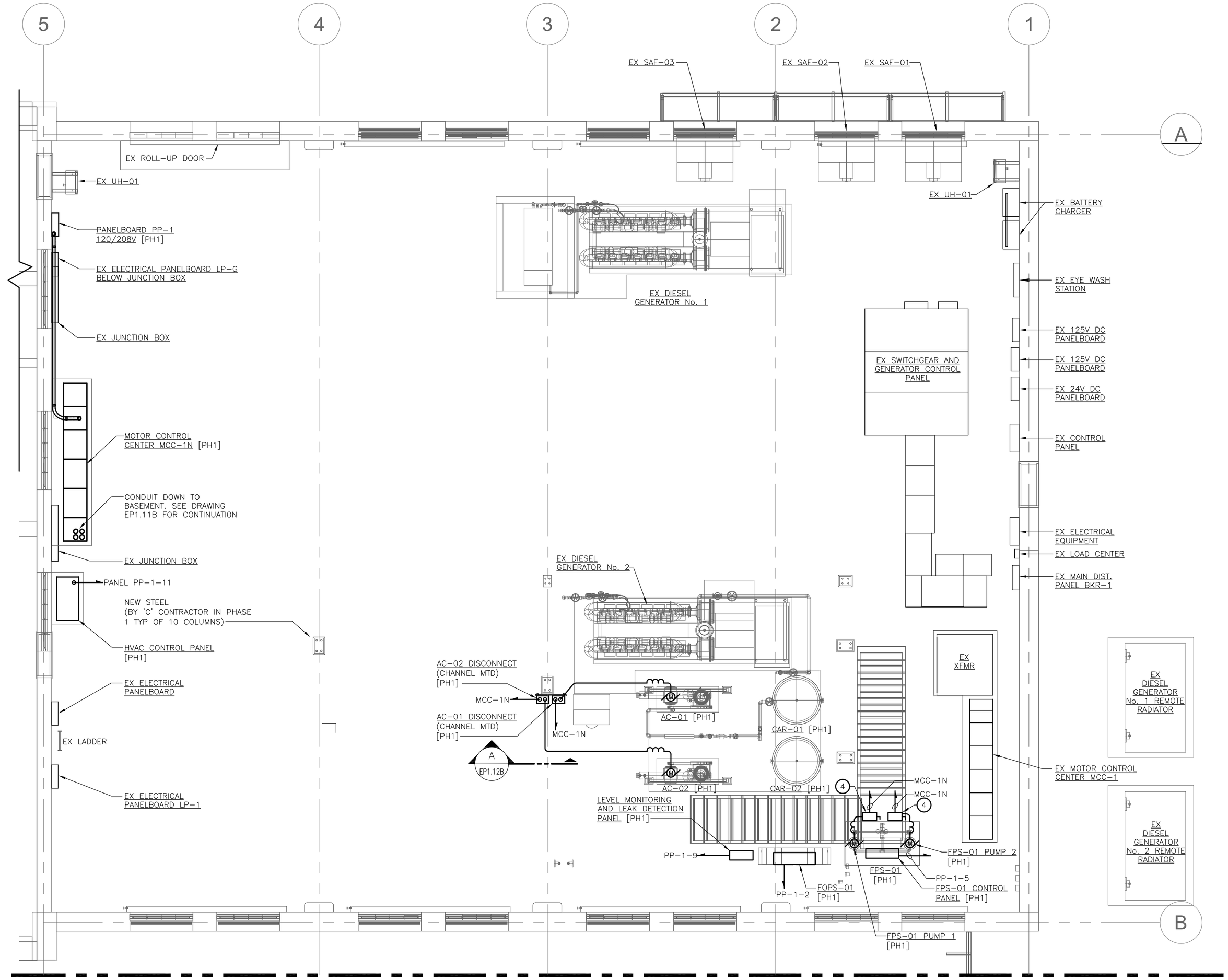


MATCHLINE, SEE DRAWING EP1.14B FOR CONTINUATION

## DRAWING NOTES:

1. (1) NEMA 3R GALVANIZED STEEL WEATHERPROOF 4" TYPE LB CONDUIT BODY. [PH1]
2. (2) ALL ASSOCIATED CONDUIT AND WIRING MUST BE FULLY INSTALLED AND OPERATIONAL BEFORE EXISTING MEDIUM VOLTAGE SERVICE EQUIPMENT SHOWN ON DRAWING EP1.12A MAY BE REMOVED. UPON REMOVAL OF THE EXISTING EQUIPMENT, ROUTE THE EXISTING 3-3" RGS CONDUIT TO THE PULLBOX AND SPLICE TO THE EXISTING 3 SETS OF 500kcmil POWERHOUSE SERVICE FEEDERS CURRENTLY CONNECTED TO THE SECONDARY OF THE TRANSFORMERS. CONTRACTOR TO VERIFY THE EXISTING WIRE SIZE. [PH1]
3. (3) ALL ASSOCIATED CONDUIT AND LINE-SIDE WIRING MUST BE FULLY INSTALLED AND OPERATIONAL BEFORE EXISTING MEDIUM VOLTAGE SERVICE EQUIPMENT SHOWN ON DRAWING EP1.12A MAY BE REMOVED. UPON REMOVAL OF EXISTING EQUIPMENT, ROUTE THE EXISTING 2-3" RGS CONDUIT TO THE PULLBOX AND SPLICE TO THE EXISTING #2 AWG 2.4kV FEEDER CURRENTLY FEEDING THE PRIMARY SIDE OF THE TRANSFORMER. THIS WILL SERVE AS THE TEMPORARY 2.4kV FEED TO HVS-24 WHICH WILL REMAIN INSTALLED UNTIL THE 13.2kV SYSTEM IS FULLY INSTALLED AND OPERATIONAL. [PH1]
4. (4) PUMP MOTOR DISCONNECT AND ALL SECONDARY WIRING TO BE PROVIDED BY THE FPS-01 MANUFACTURER.

## GENERAL NOTES:

1. OUTDOOR AIR CONDITIONING UNIT ACU-01 TO BE PROVIDED BY THE 'H' CONTRACT. ROUTE PP-1 CIRCUIT 19 CONDUIT AND WIRING TO NEMA 3R, 60A NON-FUSED DISCONNECT TO BE MOUNTED TO THE EXTERIOR WALL OF THE NORTH SIDE OF THE POWERHOUSE. COORDINATE DISCONNECT LOCATION WITH 'H' CONTRACT.

GRAPHIC SCALE

4 2 0 4 8

SCALE: 1/4"=1'-0"
UNIT OF MEASURE: FEET

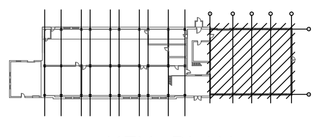

## KEY PLAN

SCALE: NONE

NYS OFFICE OF GENERAL SERVICES

*Serving New York*

ANDREW M. CUOMO
Governor
ROANN M. DESTITO
Commissioner

CONSULTANT

RMF ENGINEERING, INC., P.C.
(800) 938 - 5760
ALBANY • BALTIMORE • CHARLOTTESVILLE
DURHAM • CHARLESTON • ATLANTA
BOSTON • COLUMBUS

WARNING:
THE ALTERATION OF THIS MATERIAL IN ANY WAY, UNLESS DONE UNDER THE DIRECTION OF A COMPARABLE PROFESSIONAL, I.E. ARCHITECT FOR AN ARCHITECT, ENGINEER FOR AN ENGINEER OR LANDSCAPE ARCHITECT FOR A LANDSCAPE ARCHITECT, IS A VIOLATION OF THE NEW YORK STATE EDUCATION LAW AND/OR REGULATIONS AND IS A CLASS 'A' MISDEMEANOR.

STATE OF NEW YORK · ANDREW JONATHAN PAPP · LIC. NO. 089313 · LICENSED PROFESSIONAL ENGINEER

CONTRACT: ELECTRICAL

TITLE: PROVIDE ELECTRICAL UPGRADE FOR FEEDERS, TRANSFORMERS, AND SWITCHGEAR SITEWIDE.

LOCATION: GREENHAVEN CORRECTIONAL FACILITY
ROUTE 216
STORMVILLE, NEW YORK 12582

CLIENT: DEPARTMENT OF CORRECTIONAL SERVICES AND COMMUNITY SUPERVISION

| MARK | DATE | DESCRIPTION |
|---|---|---|
| 1 | 02-21-2013 | ADDENDUM 3 |
| – | 10-02-2012 | BID DOCUMENTS |

| | |
|---|---|
| PROJECT NUMBER: | 42535-E |
| DESIGNED BY: | JTM |
| DRAWN BY: | TNC |
| FIELD CHECK: | CNS |
| APPROVED: | CNS |

SHEET TITLE:
ENGINE ROOM – LOWER LEVEL – ELEV. 422.5' – NEW WORK – PHASE 1

DRAWING NUMBER: EP1.12B

SHEET 130 OF 284

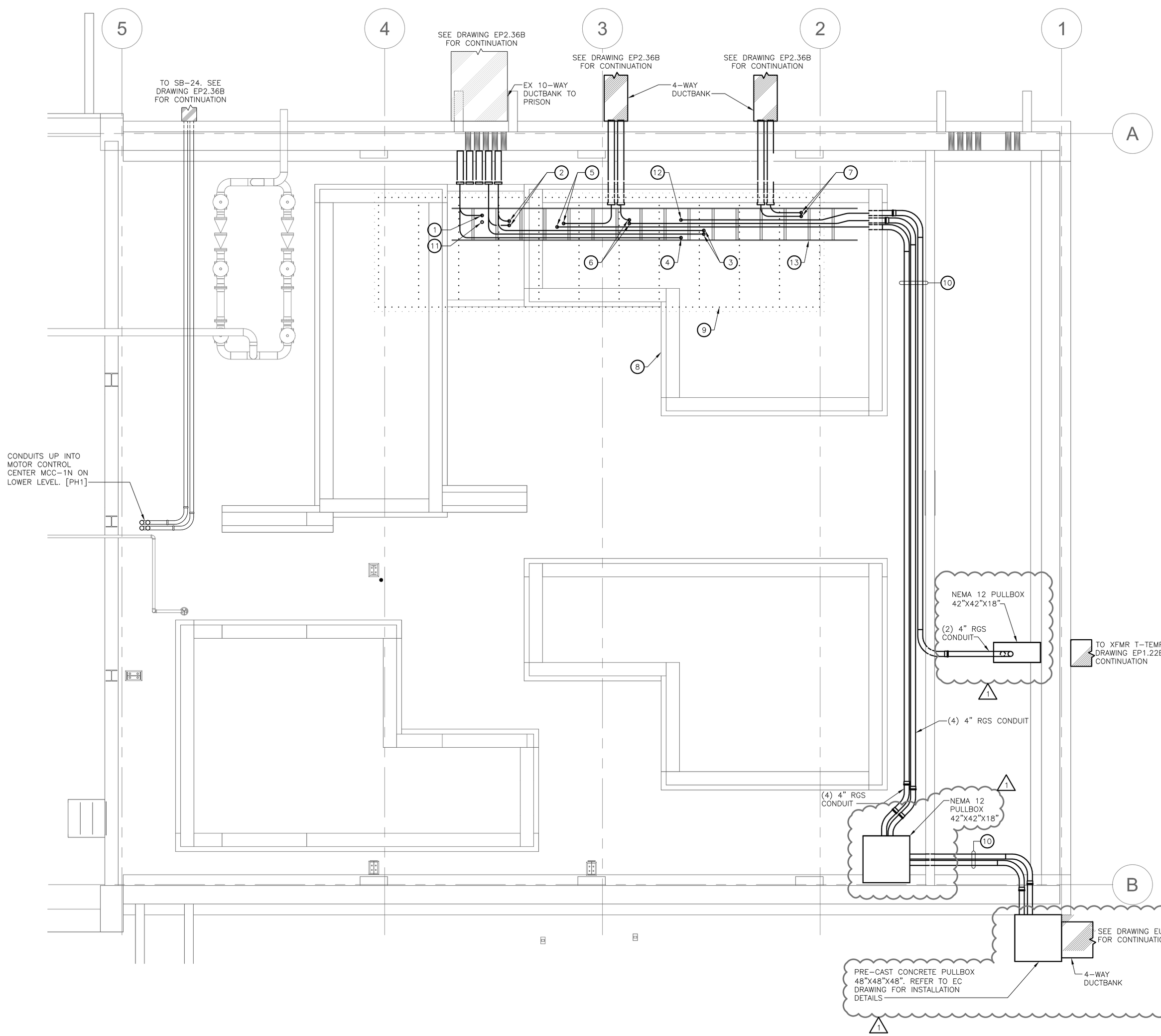


## GENERAL NOTES:

1. REFER TO C PACKAGE FOR CABLE VAULT CONSTRUCTION.
2. SEE DRAWING E5.02 FOR POWERHOUSE SINGLE LINE DIAGRAM.

## DRAWING NOTES:

1. FEEDER No. 5 CONDUIT UP TO SWITCHGEAR SECTION 3.
2. FEEDER No. 1 AND FEEDER No. 3 CONDUIT UP TO SWITCHGEAR SECTION 4.
3. FEEDER No. 2 AND FEEDER No. 4 CONDUCTOR UP TO SWITCHGEAR SECTION 9.
4. FEEDER No. 6 CONDUCTOR UP TO SWITCHGEAR SECTION 8.
5. FEEDER No. PH1 CONDUCTOR UP TO SWITCHGEAR SECTION 5.
6. FEEDER No. PH2 CONDUCTOR UP TO SWITCHGEAR SECTION 7.
7. INCOMING UTILITY FEEDER CONDUCTORS UP TO SWITCHGEAR SECTION 11.
8. COORDINATE WITH 'C' PACKAGE FOR CABLE VAULT CONSTRUCTION. ALL CABLE VAULT WIRING IS SHOWN SCHEMATICALLY. ACTUAL ROUTING TO BE FIELD VERIFIED BY CONTRACTOR.
9. CONDUIT SLEEVE TO BE INSTALLED THROUGH POWERHOUSE FLOOR BETWEEN SWITCHGEAR AND CABLE VAULT FOR SPARE FEEDER BREAKERS.
10. CONDUIT TO BE ROUTED ALONG BASEMENT CEILING.
11. SPARE 4" CONDUIT SLEEVE FOR FUTURE USE.
12. FEEDER No. SP2 CONDUCTORS UP TO SWITCHGEAR SECTION 8.
13. 24" CABLE TRAY TO BE MOUNTED FROM CEILING AT 5' AFF.

GRAPHIC SCALE
SCALE: 1/4"=1'-0"
UNIT OF MEASURE: FEET

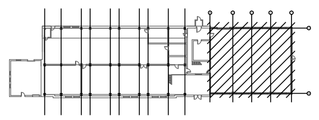

KEY PLAN
SCALE: NONE

NYS OFFICE OF GENERAL SERVICES
*Serving New York*
ANDREW M. CUOMO
Governor
ROANN M. DESTITO
Commissioner

CONSULTANT

RMF ENGINEERING, INC., P.C.
(800) 938 - 5760
ALBANY • BALTIMORE • CHARLOTTESVILLE
DURHAM • CHARLESTON • ATLANTA
BOSTON • COLUMBUS

WARNING:
THE ALTERATION OF THIS MATERIAL IN ANY WAY, UNLESS DONE UNDER THE DIRECTION OF A COMPARABLE PROFESSIONAL, I.E. ARCHITECT FOR AN ARCHITECT, ENGINEER FOR AN ENGINEER OR LANDSCAPE ARCHITECT FOR A LANDSCAPE ARCHITECT, IS A VIOLATION OF THE NEW YORK STATE EDUCATION LAW AND/OR REGULATIONS AND IS A CLASS 'A' MISDEMEANOR.

STATE OF NEW YORK · ANDREW JONATHAN PAPP · LIC. NO. 089313 · LICENSED PROFESSIONAL ENGINEER

CONTRACT: ELECTRICAL

TITLE: PROVIDE ELECTRICAL UPGRADE FOR FEEDERS, TRANSFORMERS, AND SWITCHGEAR SITEWIDE.

LOCATION: GREENHAVEN CORRECTIONAL FACILITY
ROUTE 216
STORMVILLE, NEW YORK 12582

CLIENT: DEPARTMENT OF CORRECTIONAL SERVICES AND COMMUNITY SUPERVISION

| MARK | DATE | DESCRIPTION |
|---|---|---|
| 1 | 02-21-2013 | ADDENDUM 3 |
| – | 10-02-2012 | BID DOCUMENTS |

| | |
|---|---|
| PROJECT NUMBER: | 42535-E |
| DESIGNED BY: | JTM |
| DRAWN BY: | TNC |
| FIELD CHECK: | CNS |
| APPROVED: | CNS |

SHEET TITLE:
ENGINE ROOM – BASEMENT LEVEL – ELEV. 411.5' – NEW WORK – PHASE 2

DRAWING NUMBER: EP1.21B

SHEET 134 OF 284

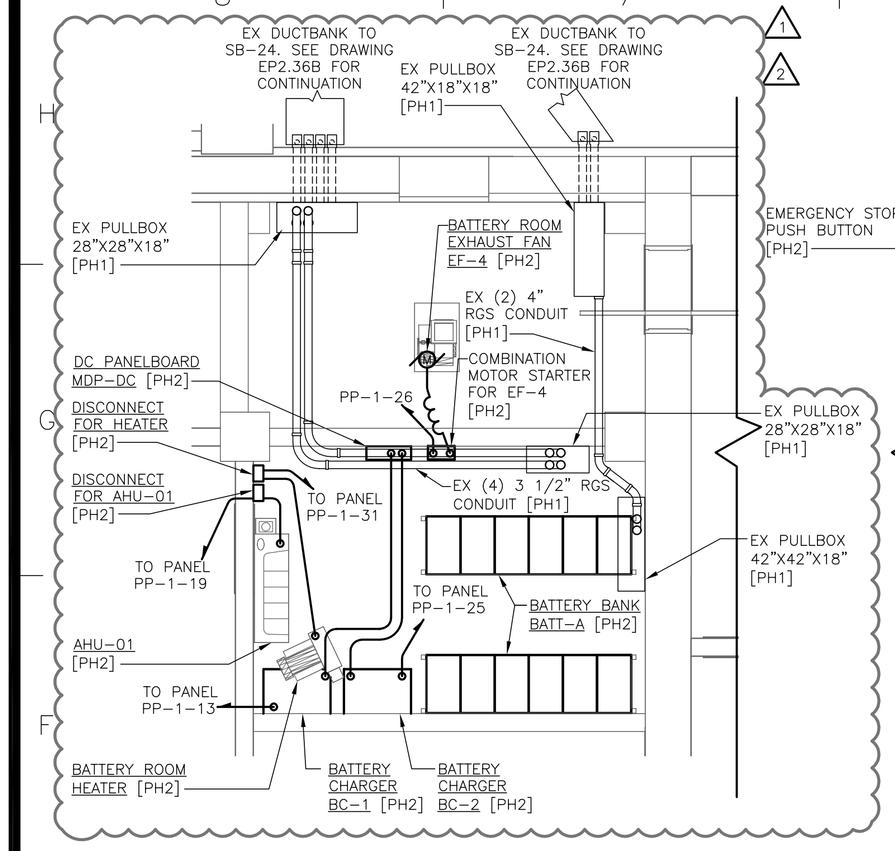


BATTERY ROOM – PHASE 2 – NEW WORK

SCALE: 1/4" = 1'-0"

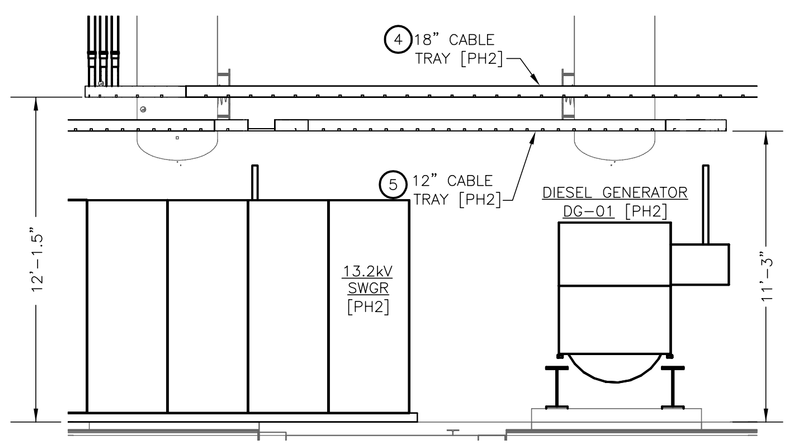


A EP1.22B ELEVATION – ELEC. EQUIP. – NEW WORK

SCALE: 1/4" = 1'-0"

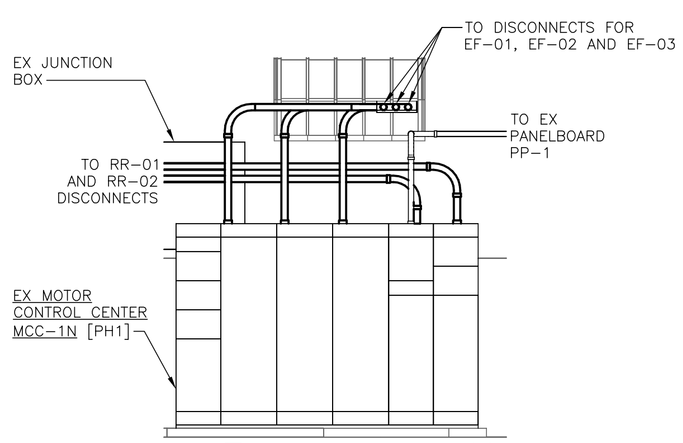


B EP1.22B ELEVATION – ELECTRICAL EQUIPMENT– NEW WORK

SCALE: 1/4" = 1'-0"

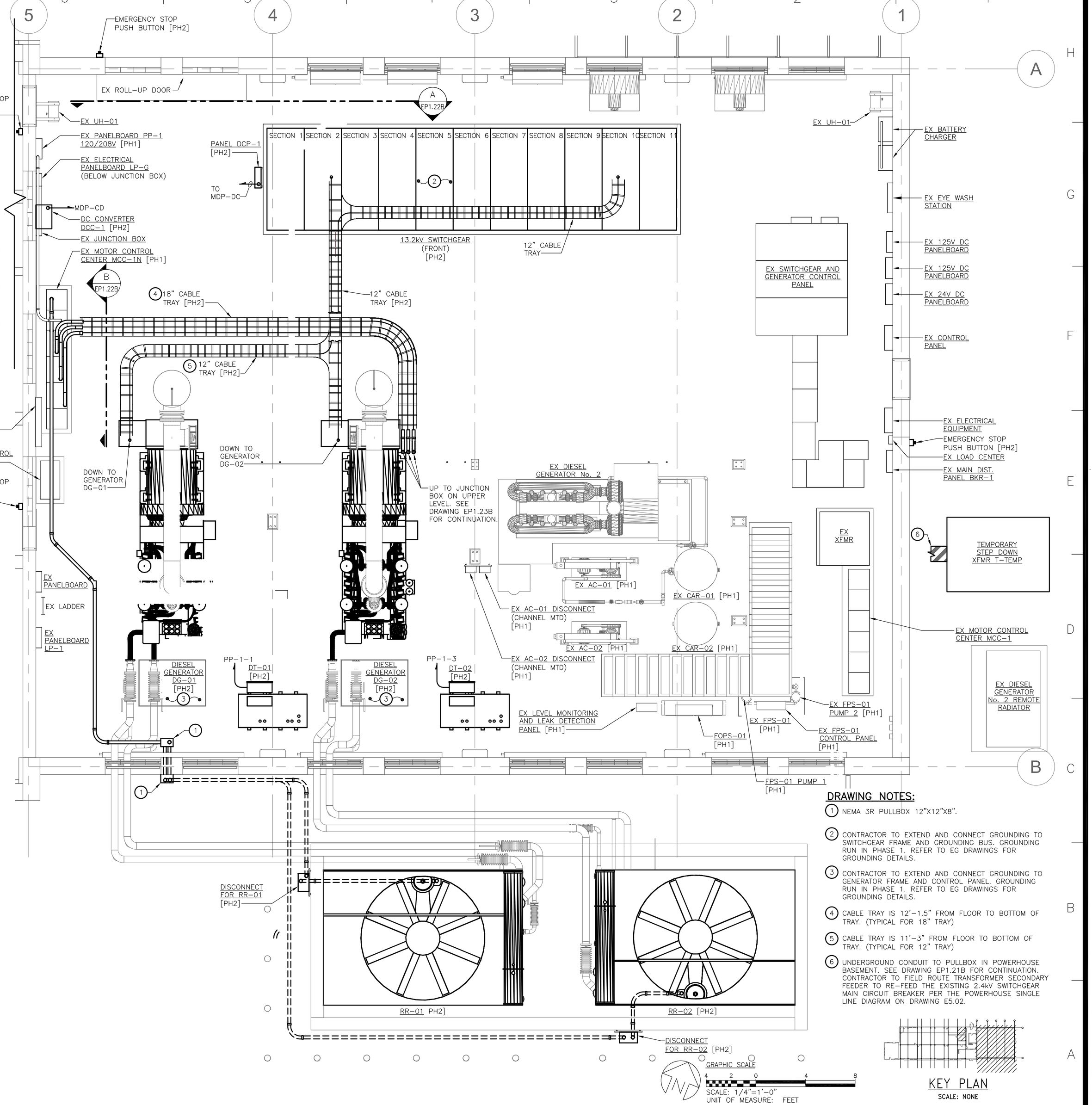


## DRAWING NOTES:

1. NEMA 3R PULLBOX 12"X12"X8".
2. CONTRACTOR TO EXTEND AND CONNECT GROUNDING TO SWITCHGEAR FRAME AND GROUNDING BUS. GROUNDING RUN IN PHASE 1. REFER TO EG DRAWINGS FOR GROUNDING DETAILS.
3. CONTRACTOR TO EXTEND AND CONNECT GROUNDING TO GENERATOR FRAME AND CONTROL PANEL. GROUNDING RUN IN PHASE 1. REFER TO EG DRAWINGS FOR GROUNDING DETAILS.
4. CABLE TRAY IS 12'-1.5" FROM FLOOR TO BOTTOM OF TRAY. (TYPICAL FOR 18" TRAY)
5. CABLE TRAY IS 11'-3" FROM FLOOR TO BOTTOM OF TRAY. (TYPICAL FOR 12" TRAY)
6. UNDERGROUND CONDUIT TO PULLBOX IN POWERHOUSE BASEMENT. SEE DRAWING EP1.21B FOR CONTINUATION. CONTRACTOR TO FIELD ROUTE TRANSFORMER SECONDARY FEEDER TO RE-FEED THE EXISTING 2.4kV SWITCHGEAR MAIN CIRCUIT BREAKER PER THE POWERHOUSE SINGLE LINE DIAGRAM ON DRAWING E5.02.



KEY PLAN

SCALE: NONE

NYS OFFICE OF GENERAL SERVICES

*Serving New York*

ANDREW M. CUOMO
Governor
ROANN M. DESTITO
Commissioner

CONSULTANT

RMF ENGINEERING, INC., P.C.
(800) 938 - 5760
ALBANY • BALTIMORE • CHARLOTTESVILLE
DURHAM • CHARLESTON • ATLANTA
BOSTON • COLUMBUS

WARNING:

THE ALTERATION OF THIS MATERIAL IN ANY WAY, UNLESS DONE UNDER THE DIRECTION OF A COMPARABLE PROFESSIONAL, I.E. ARCHITECT FOR AN ARCHITECT, ENGINEER FOR AN ENGINEER OR LANDSCAPE ARCHITECT FOR A LANDSCAPE ARCHITECT, IS A VIOLATION OF THE NEW YORK STATE EDUCATION LAW AND/OR REGULATIONS AND IS A CLASS 'A' MISDEMEANOR.

STATE OF NEW YORK · ANDREW JONATHAN RAY · LIC. NO. 089313 · LICENSED PROFESSIONAL ENGINEER

CONTRACT: ELECTRICAL

TITLE: PROVIDE ELECTRICAL UPGRADE FOR FEEDERS, TRANSFORMERS, AND SWITCHGEAR SITEWIDE.

LOCATION: GREENHAVEN CORRECTIONAL FACILITY ROUTE 216 STORMVILLE, NEW YORK 12582

CLIENT: DEPARTMENT OF CORRECTIONAL SERVICES AND COMMUNITY SUPERVISION

| MARK | DATE | DESCRIPTION |
|---|---|---|
| 2 | 02-21-2013 | ADDENDUM 3 |
| 1 | 02-19-2013 | ADDENDUM 2 |
| – | 10-02-2012 | BID DOCUMENTS |

| | |
|---|---|
| PROJECT NUMBER: | 42535-E |
| DESIGNED BY: | JTM |
| DRAWN BY: | TNC |
| FIELD CHECK: | CNS |
| APPROVED: | CNS |

SHEET TITLE: ENGINE ROOM – LOWER LEVEL PLAN – ELEV. 422.5' – NEW WORK – PHASE 2

DRAWING NUMBER: EP1.22B

SHEET 135 OF 284

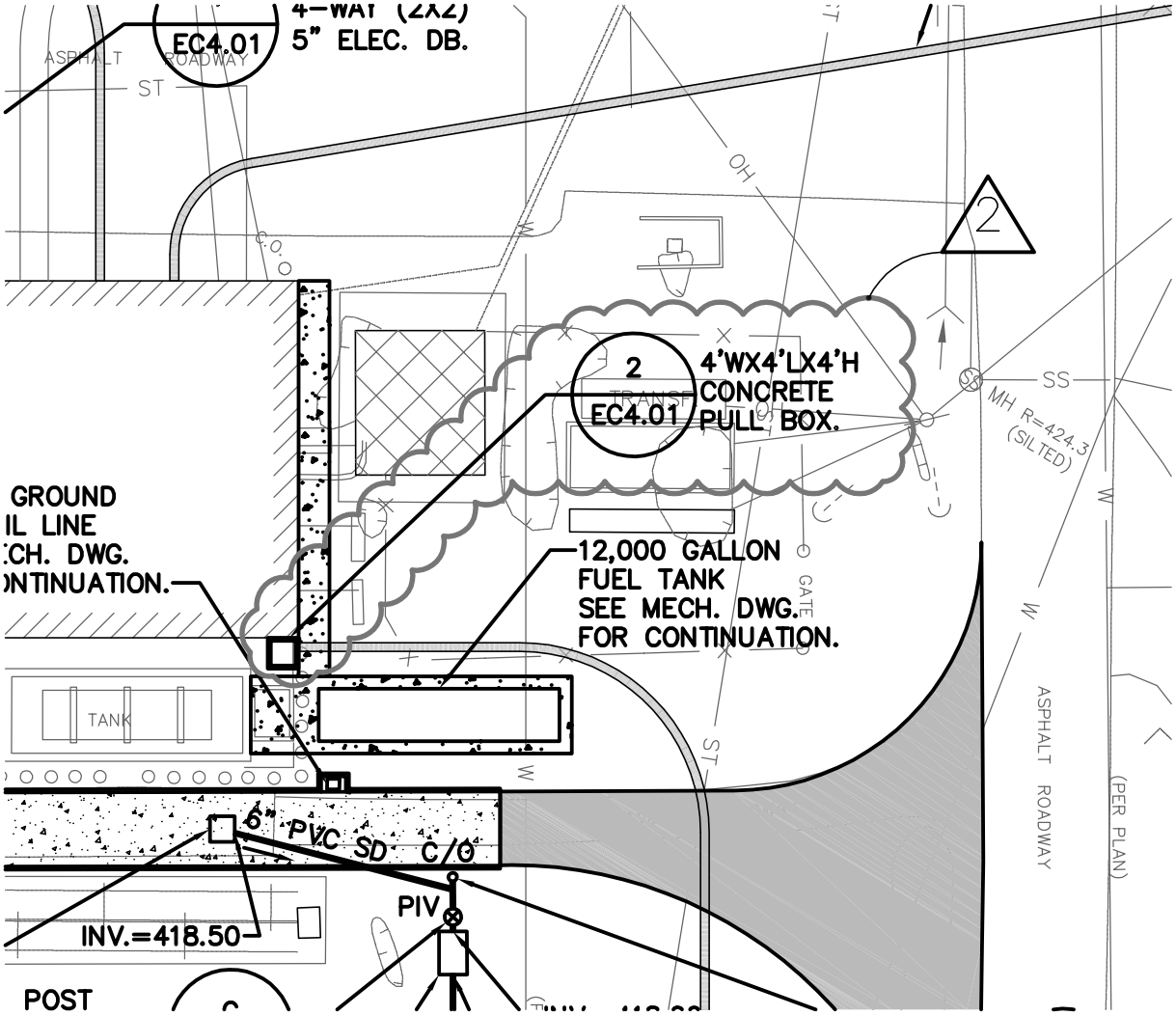


GRAPHIC SCALE

30 15 0 30 60

SCALE: 1" = 30'
UNIT OF MEASURE: FEET

| | | | |
|---|---|---|---|
| SHEET TITLE: UTILITY SITE PLAN – AREA 7 | NYS OFFICE OF GENERAL SERVICES Serving New York ANDREW M. CUOMO Governor ROANN M. DESTITO Commissioner | RMF Engineering Reliability. Efficiency. Integrity. | |
| PROJECT: ADDENDUM NO. 2 TO PROJECT NO. 42535-E GREEN HAVEN CORRECTIONAL FACILITY STORMVILLE, NY | | PROJECT NO: 111109.A0 | SCALE: AS SHOWN |
| | | DATE: 02/21/13 | DWG NO: SK-EC2.07-2 |

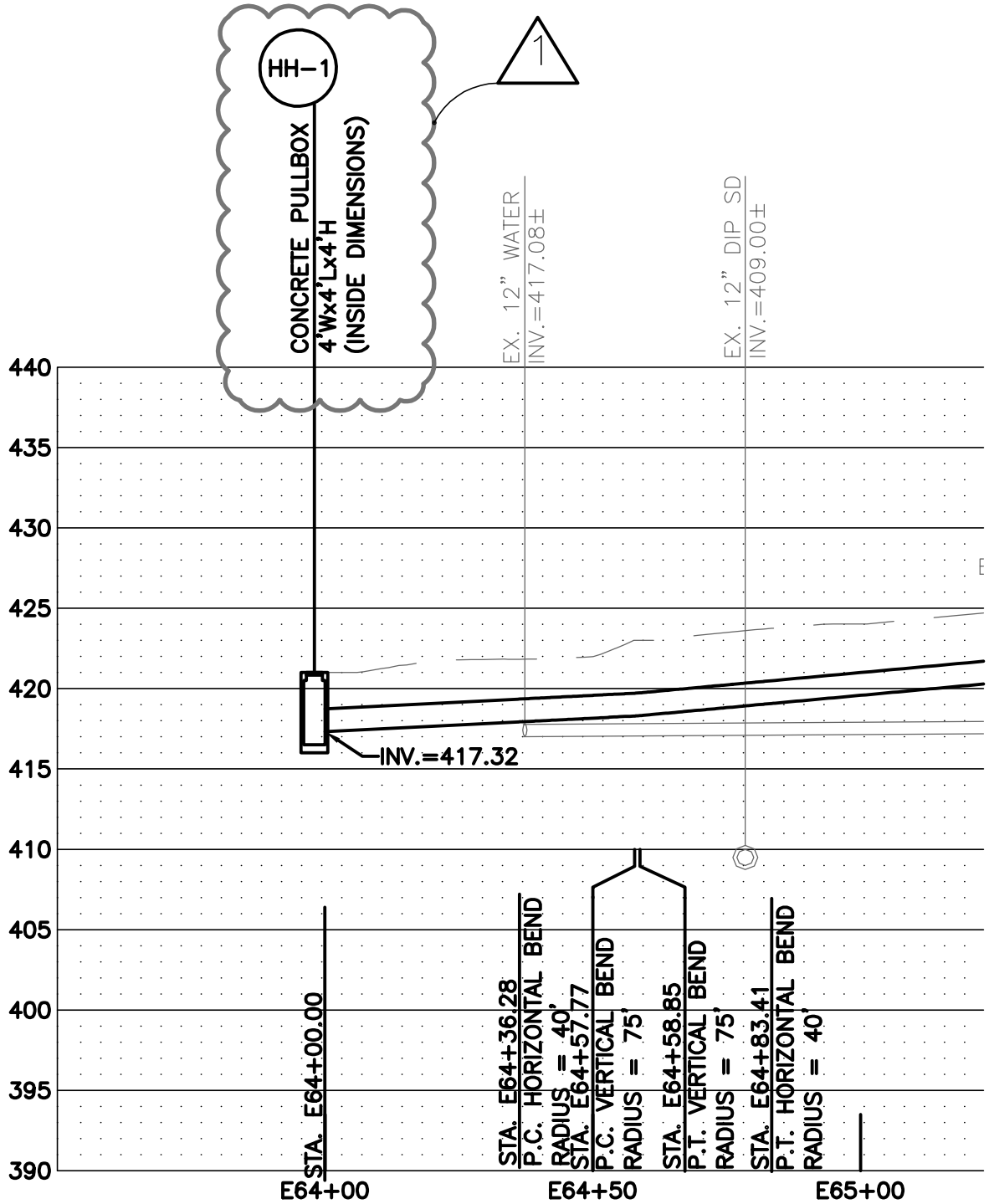


GRAPHIC SCALE

HORIZONTAL SCALE: 1" = 30'-0"
UNIT OF MEASURE: FEET

VERTICAL SCALE: 1" = 10'-0"
UNIT OF MEASURE: FEET

SHEET TITLE:
UTILITY SITE PLAN – AREA 7

PROJECT:
ADDENDUM NO. 2 TO PROJECT NO. 42535-E
GREEN HAVEN CORRECTIONAL FACILITY
STORMVILLE, NY

NYS OFFICE OF GENERAL SERVICES
Serving New York
ANDREW M. CUOMO
Governor
ROANN M. DESTITO
Commissioner

RMF Engineering
Reliability. Efficiency. Integrity.

| PROJECT NO: | SCALE: |
|---|---|
| 111109.A0 | AS SHOWN |
| DATE: 02/21/13 | DWG NO: SK-EC3.07-1 |