STATE OF NEW YORK
OFFICE OF GENERAL SERVICES
DESIGN AND CONSTRUCTION GROUP
THE GOVERNOR NELSON A. ROCKEFELLER
EMPIRE STATE PLAZA
ALBANY, NY 12242

ADDENDUM NO. 1 TO PROJECT NO. 43625

CONSTRUCTION WORK, PLUMBING WORK
UPGRADE ELEVATED WATER TOWER
HALE CREEK CORRECTIONAL FACILITY
279 MALONEY ROAD
JOHNSTOWN, NY

June 26, 2015

NOTE: This Addendum forms a part of the Contract Documents. Insert it in the Project Manual. Acknowledge receipt of this Addendum in the space provided on the Bid Form.

C Contract:
Drawings:
1. **C-001** Notes **added;** revised drawing within addendum.
2. **S-101** Notes **added;** revised drawing within addendum.
3. **C-001** temporary domestic water main **removed;** revised drawing within addendum.

Specifications:
a. **015000 Paragraph 1.07; Remove.**

P Contract:
Drawings:
4. **P-001** Notes **added;** revised drawing within addendum.
5. **P-002** Notes **added;** revised drawing within addendum.
6. **P-101** Notes **added;** revised drawing within addendum.

C, P Contract:

Specifications:
a. **Add** specification **331300** DISINFECTION OF WATER UTILITY DISTRIBUTION from this addendum.
b. **331300** Paragraph 3.01 C.4; **Replace** orthotolidine reagent with the DPD method.

END OF ADDENDUM

Margaret F. Larkin
Executive Director

TEMPORARY FIRE PUMP SYSTEM DESIGN REQUIREMENTS
FLOW = 1,200 GPM
HEAD = 160' TDH

TEMPORARY FIRE PUMP SYSTEM NOTES:

1. CONTRACTOR SHALL PROVIDE A COMPLETE TEMPORARY PUMPING SYSTEM FOR THE FIRE SYSTEM INCLUDING BUT NOT LIMITED TO THE FOLLOWING: BYPASS PUMPS, TEMPORARY HOSE TO CONNECT TO THE SYSTEM, BACKFLOW PREVENTION DEVICES, FLOW METERING, VALVING, PRESSURE TRANSDUCER, RECIRCULATION LOOPS, CONTROL PANELS, ISOLATION VALVES AND MISCELLANEOUS FITTINGS AND ADAPTERS, ETC. TEMPORARY SYSTEMS SHALL BE PROVIDED BY GODWIN OR APPROVED EQUAL.

2. TEMPORARY FIRE PUMP SYSTEM SHALL BE DIESEL DRIVEN W/ SILENCERS.

3. CONTRACTOR SHALL PROVIDE REDUNDANT TEMPORARY FIRE PUMP SYSTEMS TO BE STORED ON SITE AT ALL TIMES DURING CONSTRUCTION.

4. TEMPORARY BACKFLOW PREVENTION AND FLOW METERING SHALL MEET THE REQUIREMENTS OF THE CITY OF GLOVERSVILLE MUNICIPAL WATER DEPARTMENT AND NYS DEPARTMENT OF HEALTH REGULATIONS.

5. CONTRACTOR SHALL PROVIDE SHOP DRAWINGS FOR TEMPORARY FIRE BYPASS PUMPING. SHOP DRAWINGS SHALL BE STAMPED AND SIGNED BY A LICENSED PROFESSIONAL ENGINEER IN THE THE STATE OF NEW YORK.

6. PUMP SYSTEM SHALL BE DISINFECTED PRIOR TO USE AND TEMPORARY CONNECTION HOSE SHALL MEET NSF REQUIREMENTS FOR POTABLE WATER USE.

7. CONTRACTOR SHALL ISOLATE STORAGE TANK DURING BYPASS PUMPING.

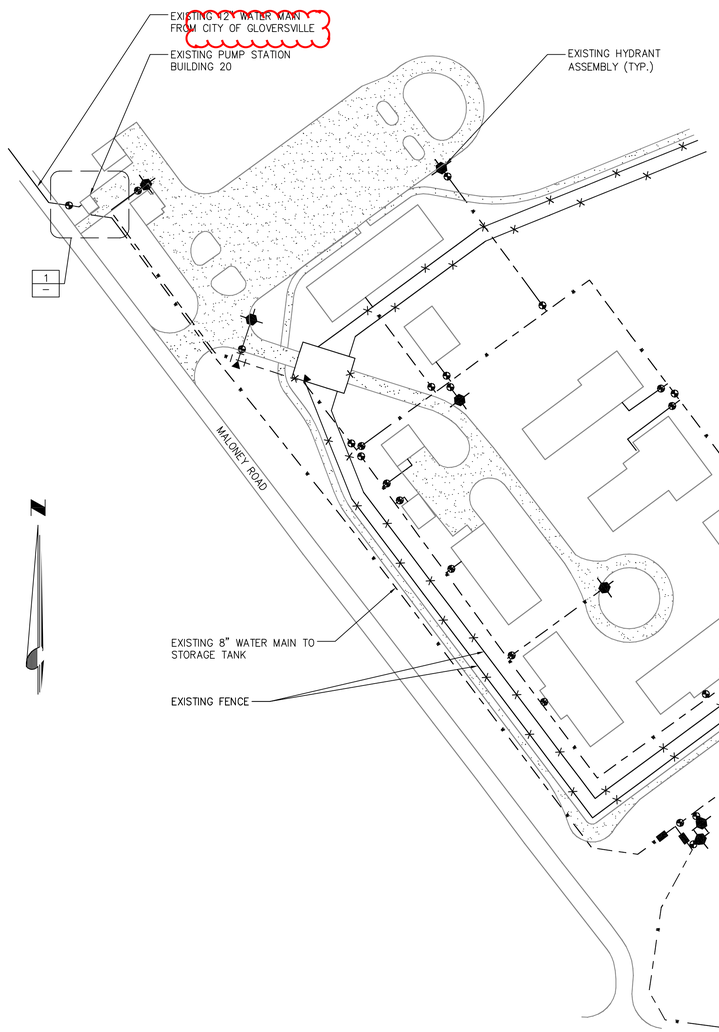

SITE PLAN
SCALE: NTS

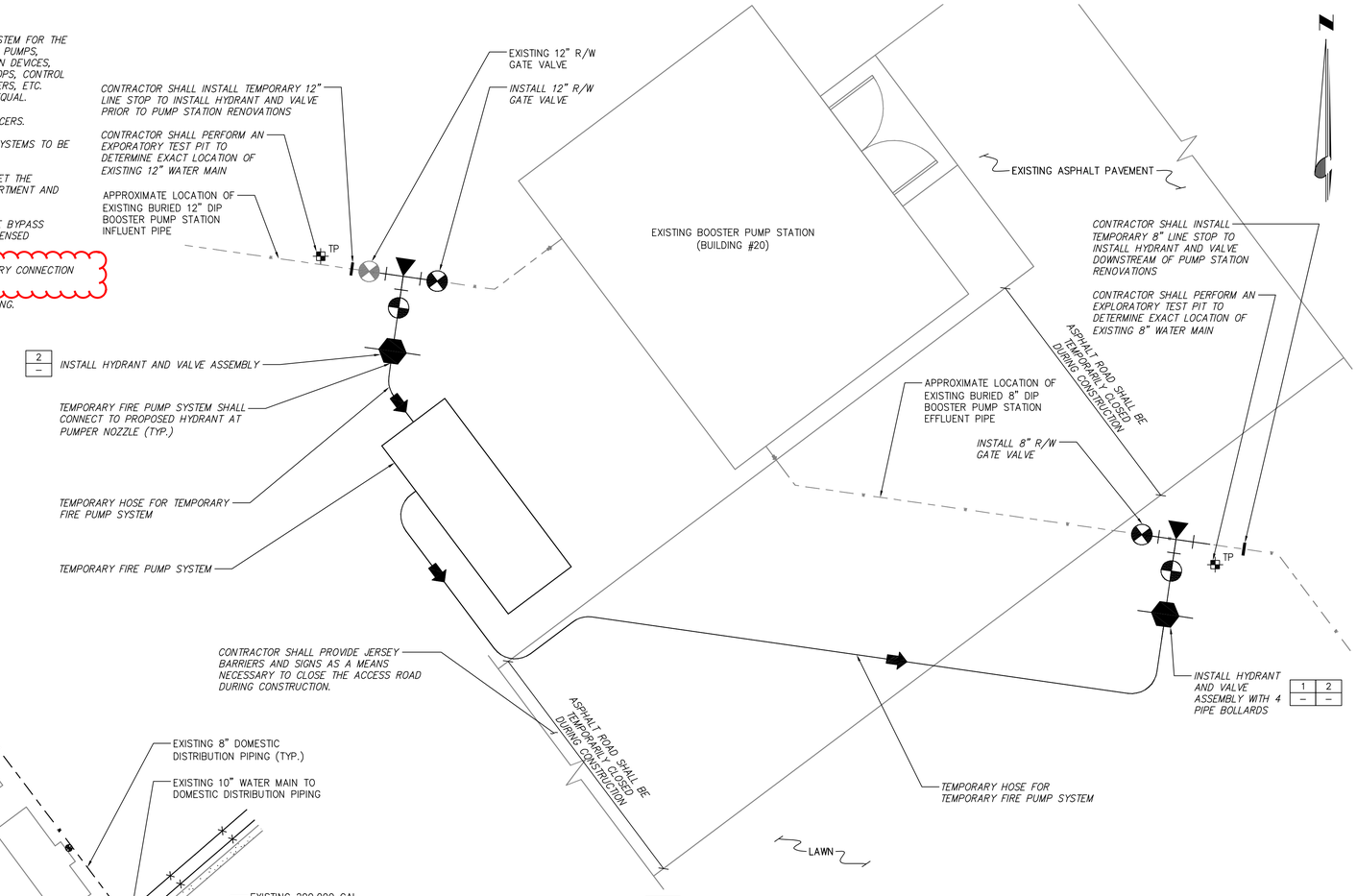

1 BOOSTER PUMP STATION AREA SITE PLAN
SCALE: NTS

NOTE: ALL WORK SHOWN IN THIS SITE PLAN SHALL BE COMPLETED PRIOR TO TAKING TANK OFFLINE.

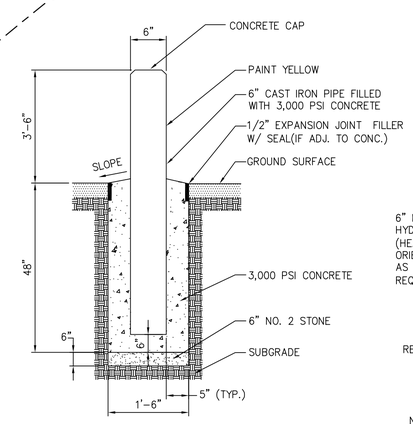

NOTE:

1. EXACT LOCATION OF PIPE BOLLARDS SHALL BE REVIEWED WITH DIRECTOR'S REPRESENTATIVE PRIOR TO INSTALLATION.

1 PIPE BOLLARD DETAIL
SCALE: NTS

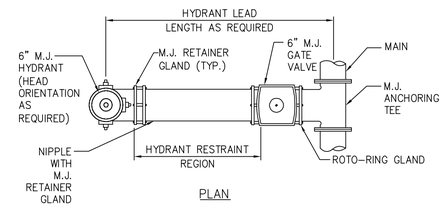

PLAN

NOTES:

1. PROPOSED LOCATIONS OF HYDRANTS TO BE FIELD LOCATED (PAINTED) AND APPROVED BY OWNER AND ENGINEER PRIOR TO INSTALLATION.

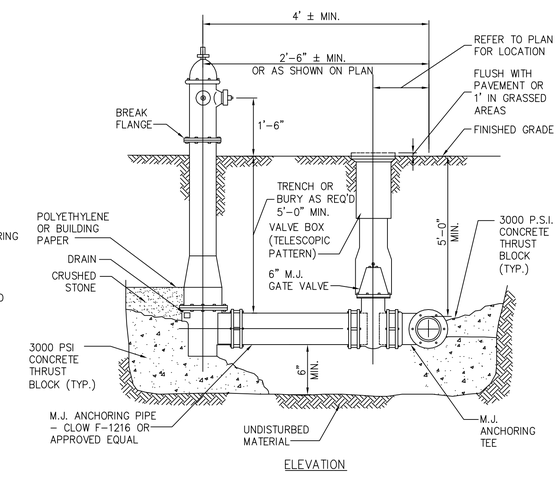

ELEVATION

2 HYDRANT AND VALVE ASSEMBLY INSTALLATION DETAIL
SCALE: NTS

NYS OFFICE OF GENERAL SERVICES
Serving New York
ANDREW M. CUOMO
Governor
ROANN M. DESTITO
Commissioner

CONSULTANT

CHA
III Winners Circle, PO Box 5269 · Albany, NY 12205-0269
Main: (518) 453-4500 · www.chacompanies.com

WARNING:
THE ALTERATION OF THIS MATERIAL IN ANY WAY, UNLESS DONE UNDER THE DIRECTION OF A COMPARABLE PROFESSIONAL, I.E. ARCHITECT FOR AN ARCHITECT, ENGINEER FOR AN ENGINEER OR LANDSCAPE ARCHITECT FOR A LANDSCAPE ARCHITECT, IS A VIOLATION OF THE NEW YORK STATE EDUCATION LAW AND/OR REGULATIONS AND IS A CLASS 'A' MISDEMEANOR.

STATE OF NEW YORK · MICHAEL E. HOLLOWAY · 068351 · LICENSED PROFESSIONAL ENGINEER

CONTRACT:

TITLE:
WATER STORAGE TANK REHABILITATION PROJECT

LOCATION:
HALE CREEK CORRECTIONAL FACILITY
279 MALONEY ROAD
JOHNSTOWN, NY 12095

CLIENT:
NYS OFFICE OF GENERAL SERVICES

MARK	DATE	DESCRIPTION
	6/11/2015	NYSDOH COMMENTS
	3/27/2015	FINAL SUBMITTAL
	9/26/2014	100% SUBMITTAL

PROJECT NUMBER:	43625 – C
DESIGNED BY:	KLH
DRAWN BY:	SNP
FIELD CHECK:	
APPROVED:	MBA

SHEET TITLE:
TEMPORARY TANK BYPASS PUMPING PLAN

DRAWING NUMBER:
C–001

SHEET 3 OF 8

Jun 16,2015 – 11:35am
V:\Projects\ANY\K3\25050\CADD_ACAD_ CONTRACT 2G WATER STORAGE TANK\C2G_C-001_25050.dwg
36x24 PLOT SHEET

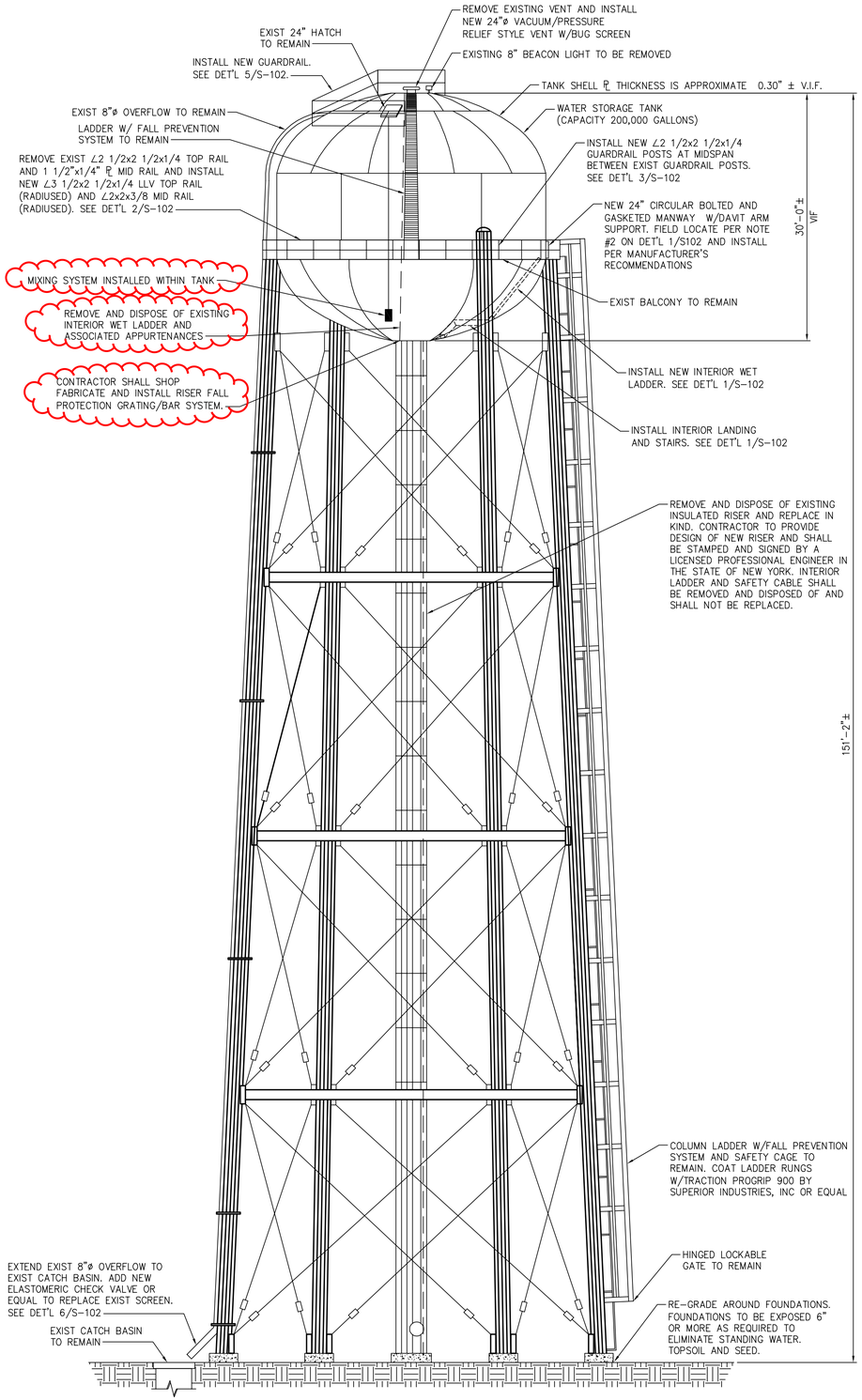

NOTES:
1. FLOOD BALCONY WITH WATER AND DRILL 1"ø DRAIN HOLES AT LOW POINTS AS REQUIRED TO PROVIDE ADEQUATE DRAINAGE AND ELIMINATE PONDING.
2. ALL INTERIOR AND EXTERIOR LADDERS TO RECEIVE SLIP RESISTANT PAINT ON RUNGS.

ELEVATION
NOT TO SCALE

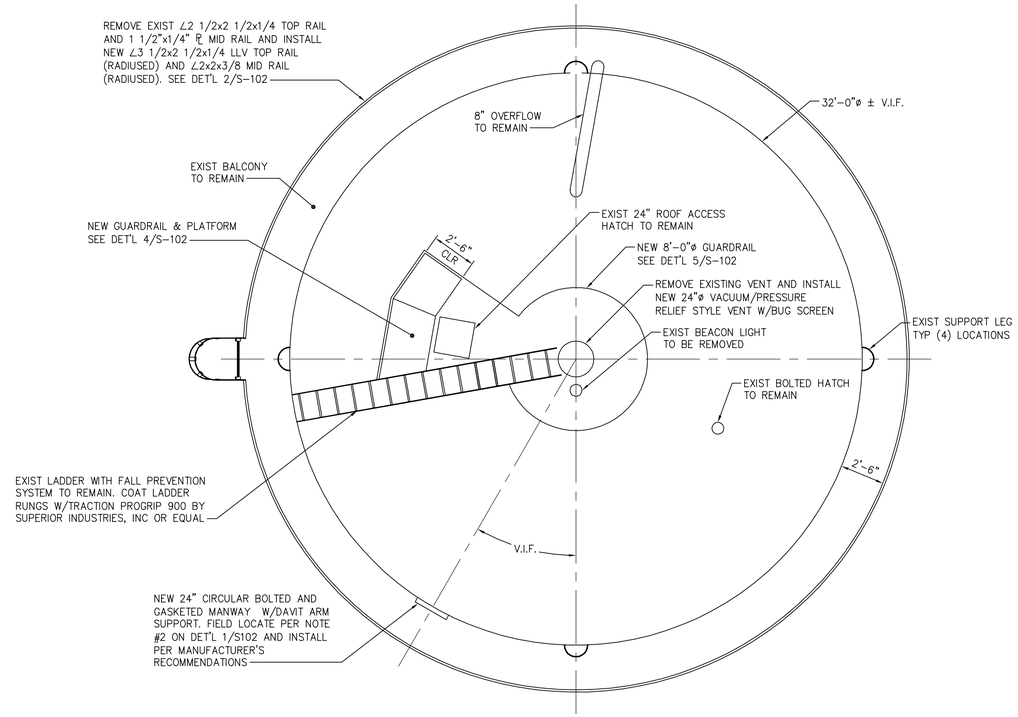

PLAN
SCALE: 1/4"=1'-0"

GENERAL NOTES:

1. REFER TO THE PROJECT MANUAL FOR GOVERNING JOB REQUIREMENTS AND MATERIAL SPECIFICATIONS. THE FOLLOWING NOTES ARE SUPPLEMENTAL TO THE ABOVE REQUIREMENTS.
2. ALL DIMENSIONS TO, OF, AND IN EXISTING STRUCTURES SHALL BE VERIFIED IN FIELD BY CONTRACTOR AND ALL DISCREPANCIES SHALL BE REPORTED TO THE ENGINEER.
3. DO NOT CHANGE THE SIZE OR SPACING OF STRUCTURAL ELEMENTS WITHOUT THE APPROVAL OF THE ENGINEER.
4. DETAILS SHOWN ARE TYPICAL AND APPLY TO SIMILAR CONDITIONS UNLESS NOTED OTHERWISE.
5. THESE DRAWINGS DO NOT INCLUDE NECESSARY COMPONENTS FOR CONSTRUCTION SAFETY.
6. THE DESIGN IS BASED ON THE BUILDING CODE OF NEW YORK STATE, 2010 EDITION AND AWWA STANDARDS.
7. CONTRACTOR SHALL DETERMINE EXACT LOCATION OF ALL EXISTING UTILITIES BEFORE COMMENCING WORK. HE/SHE AGREES TO BE FULLY RESPONSIBLE FOR ANY AND ALL DAMAGES WHICH MIGHT BE OCCASIONED BY HIS/HER FAILURE TO LOCATE AND PRESERVE ALL UTILITIES.
8. INCORRECTLY FABRICATED, DAMAGED, OR OTHERWISE MISFITTING OR NONCONFORMING MATERIALS OR CONDITIONS SHALL BE REPORTED TO THE OWNER'S REPRESENTATIVE PRIOR TO REMEDIAL OR CORRECTIVE ACTION. ANY SUCH ACTION SHALL REQUIRE PRE-APPROVAL BY THE ENGINEER.
9. EACH CONTRACTOR SHALL COOPERATE WITH THE OWNER'S REPRESENTATIVE AND COORDINATE HIS/HER WORK WITH THE WORK OF OTHERS.
10. VERIFY SIZE AND LOCATION OF OPENINGS PRIOR TO BEGINNING WORK.
11. CONTRACTOR SHALL LOCATE AND VERIFY VALVES REQUIRED TO ISOLATE THE TANK.
12. PRIOR TO DESIGN OF REPLACEMENT INSULATED RISER, CONTRACTOR SHALL REMOVE INSULATION FROM RISER AT 10'-0" INCREMENTS FOR EVALUATION OF THE CONDITION AND THICKNESS OF EXISTING STEEL BY THE DIRECTOR'S REPRESENTATIVE. COORDINATE RESULTS WITH THE ENGINEER. AFTER EVALUATION, REINSTALL INSULATION AND REPAIR.
13. CONTRACTOR SHALL INCLUDE AN ALLOWANCE IN SECTION 012100 TO COORDINATE WITH EXISTING WATER STORAGE TANK HEATER MANUFACTURER TO EVALUATE EXISTING HEATING SYSTEM.
14. ALL TANK ACCESSORIES SHALL COMPLY WITH MINIMUM REQUIREMENTS OF OSHA LAWS AND REGULATIONS AND AMERICAN WATER WORKS ASSOCIATION (AWWA) TANK STANDARDS.
15. THE PROPOSED 24" VENT SHALL MEET THE LATEST REQUIREMENTS OF AWWA AND THE RECOMMENDED STANDARDS FOR WATER WORKS (10 STATE STANDARDS) AND BE CONSTRUCTED TO PREVENT THE ENTRANCE OF SURFACE WATER AND RAIN WATER. THE VENT SHALL ALSO BE PROPERLY SCREENED TO EXCLUDE BIRDS AND ANIMALS, AS WELL AS INSECTS AND DUST, AS MUCH AS THIS FUNCTION CAN BE MADE COMPATIBLE WITH EFFECTIVE VENTING. THE VENT SHALL OPEN DOWNWARDS AND BE FITTED WITH A FINE MESH NON-CORRODIBLE SCREEN WITH AN AUTOMATICALLY RESETTING PRESSURE-VACUUM RELIEF MECHANISM.
16. THE PROPOSED MANWAY SHALL MEET THE LATEST REQUIREMENTS OF AWWA AND THE RECOMMENDED STANDARDS FOR WATER WORKS (10 STATE STANDARDS). THE MANWAY SHALL BE BOLTED AND GASKETED.

STEEL NOTES:

1. STRUCTURAL STEEL FABRICATION AND ERECTION SHALL CONFORM TO THE AISC MANUAL OF STEEL CONSTRUCTION (LATEST EDITION).
2. WELDED CONNECTIONS SHALL CONFORM TO THE LATEST REVISED CODE OF THE AMERICAN WELDING SOCIETY.
3. ANY CONNECTIONS WITHOUT WELD SYMBOLS SHALL BE AT A MINIMUM WELDED ALL AROUND WITH THE MINIMUM FILLET OR BUTT WELD SIZE.
4. STRUCTURAL STEEL ANGLES, PLATES, ETC. SHALL CONFORM TO ASTM A36 REQUIREMENTS (36 KSI). STRUCTURAL STEEL W AND C SHAPES SHALL CONFORM TO ASTM A992 (50 KSI). STRUCTURAL TUBING AND PIPES SHALL CONFORM TO THE ASTM A500 GRADE B REQUIREMENTS (46 KSI).
5. DO NOT PLACE HOLES THROUGH STRUCTURAL STEEL MEMBERS EXCEPT AS SHOWN AND DETAILED ON STRUCTURAL DRAWINGS.
6. FABRICATION SHALL BE PERFORMED PER THE LATEST EDITION OF THE AISC SPECIFICATION AND ASCE 10.
7. STORE MATERIALS TO PERMIT EASY ACCESS FOR INSPECTION AND IDENTIFICATION. KEEP STEEL MEMBERS OFF THE GROUND AND SPACED BY USING PALLETS, DUNNAGE, OR OTHER SUPPORTS AND SPACERS. PROTECT STEEL MEMBERS AND PACKAGED MATERIALS FROM CORROSION AND DETERIORATION. STORE FASTENERS IN A PROTECTED PLACE. DO NOT STORE MATERIALS IN A MANNER THAT WILL CAUSE DISTORTION, DAMAGE, OR OVERLOAD TO MEMBERS OR SUPPORTS. REPLACE DAMAGED MATERIALS AS DIRECTED.
8. SET STRUCTURAL STEEL ACCURATELY IN LOCATION AND TO ELEVATION INDICATED AND ACCORDING TO AISC SPECIFICATIONS. NOTIFY ENGINEER OR DISCREPANCIES PRIOR TO TAKING CORRECTIVE ACTION.
9. MAINTAIN ERECTION TOLERANCES WITHIN AISC SPECIFICATIONS AND ASCE 10 STANDARDS.
10. DO NOT USE THERMAL CUTTING DURING ERECTION.

PAINTING NOTES:

1. THE ENTIRE INTERIOR (WET) AREA OF THE 200,000 GALLON TANK INCLUDING WET RISER SHALL BE BLASTED AND PAINTED IN ACCORDANCE WITH SPECIFICATION 099701.
2. THE ENTIRE INTERIOR (DRY) AREA OF THE 200,000 GALLON TANK SHALL BE BLASTED AND PAINTED IN ACCORDANCE WITH SPECIFICATION 099701.
3. THE ENTIRE EXTERIOR OF THE 200,000 GALLON TANK (INCLUDING BUT NOT LIMITED TO THE BOWL, ROOF, RISER, SUPPORT COLUMNS, SUPPORT ROD, VENT, ACCESS HATCHES, CATWALKS AND BALCONY) SHALL BE BLASTED AND PAINTED IN ACCORDANCE WITH SPECIFICATION 099701, INCLUDING THE WET RISER.
4. AFTER COMPLETION OF WORK INCLUDING DISINFECTION AND TESTING, CONTRACTOR SHALL REINSTALL AND TEST/CALIBRATE ANY LEVEL SENSING EQUIPMENT LOCATED WITHIN THE 200,000 GALLON TANK.
5. NOTIFY THE FACILITY 2 WEEKS PRIOR TO DRAWING DOWN THE TANK FOR INTERIOR PAINTING WORK.

SUBMITTALS:

17. SUBMIT THE FOLLOWING IN ACCORDANCE WITH CONDITIONS OF CONTRACT AND DIVISION 1 SPECIFICATION SECTIONS. PRODUCT DATA OR MANUFACTURER'S SPECIFICATIONS AND INSTALLATION INSTRUCTIONS FOR FOLLOWING PRODUCTS. INCLUDE LABORATORY TEST REPORTS AND OTHER DATA TO SHOW COMPLIANCE WITH SPECIFICATIONS (INCLUDING SPECIFIED STANDARDS).
    a. STRUCTURAL STEEL, INCLUDING PRIMER AND WELDER'S CERTIFICATES
    b. STEEL PLATE PATCHING QUANTITIES AND LOCATIONS
    c. MANWAYS
    d. EPOXY FILLER MATERIAL
    e. SHOP DRAWINGS FOR ALL METAL FABRICATIONS; LADDERS,STAIRS, PLATFORMS, GUARDRAILS, ETC.

NYS OFFICE OF GENERAL SERVICES
Serving New York
ANDREW M. CUOMO
Governor
ROANN M. DESTITO
Commissioner

CONSULTANT

CHA
III Winners Circle, PO Box 5269 · Albany, NY 12205-0269
Main: (518) 453-4500 · www.chacompanies.com

WARNING:
THE ALTERATION OF THIS MATERIAL IN ANY WAY, UNLESS DONE UNDER THE DIRECTION OF A COMPARABLE PROFESSIONAL, I.E. ARCHITECT FOR AN ARCHITECT, ENGINEER FOR AN ENGINEER OR LANDSCAPE ARCHITECT FOR A LANDSCAPE ARCHITECT, IS A VIOLATION OF THE NEW YORK STATE EDUCATION LAW AND/OR REGULATIONS AND IS A CLASS 'A' MISDEMEANOR.

STATE OF NEW YORK · CHRISTOPHER J. B. JENSEN · 079007 · LICENSED PROFESSIONAL ENGINEER

CONTRACT:

TITLE: WATER STORAGE TANK REHABILITATION PROJECT

LOCATION: HALE CREEK CORRECTIONAL FACILITY
279 MALONEY ROAD
JOHNSTOWN, NY 12095

CLIENT: NYS OFFICE OF GENERAL SERVICES

MARK	DATE	DESCRIPTION
	6/11/2015	NYSDOH COMMENTS
	3/27/2015	FINAL SUBMITTAL
	9/26/2014	100% SUBMITTAL

PROJECT NUMBER:	43625 – C
DESIGNED BY:	PDS
DRAWN BY:	CEC
FIELD CHECK:	–
APPROVED:	CJJ

SHEET TITLE: WATER STORAGE TANK ELEVATION AND PLAN

DRAWING NUMBER: S-101

SHEET 4 OF 8

Jun 16,2015 – 11:36am
V:\Projects\ANY\X3\25050\CADD_ACAD_ CONTRACT 2G WATER STORAGE TANK\S-101-25050.dwg
36x24 PLOT SHEET

TEMPORARY DOMESTIC PUMP SYSTEM DESIGN REQUIREMENTS
PRIMARY DESIGN POINT:
FLOW = 375 GPM
HEAD = 130 TDH
SECONDARY DESIGN POINT:
FLOW = 75 GPM
HEAD = 140 TDH

TEMPORARY DOMESTIC PUMP SYSTEM NOTES:

1. CONTRACTOR SHALL PROVIDE A COMPLETE TEMPORARY PUMPING SYSTEM FOR THE DOMESTIC SYSTEM INCLUDING BUT NOT LIMITED TO THE FOLLOWING: BYPASS PUMPS, TEMPORARY HOSE TO CONNECT TO THE SYSTEM, BACKFLOW PREVENTION DEVICES, FLOW METERING, VALVING, PRESSURE TRANSDUCER, RECIRCULATION LOOPS, CONTROL PANELS, TEMPORARY CHLORINE INJECTION TAP, SAMPLE TAPS UPSTREAM AND DOWNSTREAM OF CHLORINE INJECTION POINT, ISOLATION VALVING, AND MISCELLANEOUS FITTINGS AND ADAPTERS, ETC. TEMPORARY SYSTEMS SHALL BE PROVIDED BY GODWIN OR APPROVED EQUAL.

2. CONTRACTOR SHALL PROVIDE TEMPORARY 55-GALLON CHLORINE DAY TANK, CHLORINE (FOR THE DURATION OF THE PROJECT), CHEMICAL FEED PUMP, AND FEED LINE. CHLORINE DAY TANK AND FEED PUMP SHALL BE HOUSED INSIDE EXISTING BUILDING #20.

3. TEMPORARY DOMESTIC BYPASS BOOSTER PUMP SYSTEM SHALL BE DIESEL DRIVEN W/ SILENCERS.

4. CONTRACTOR SHALL PROVIDE A REDUNDANT TEMPORARY DOMESTIC BOOSTER PUMP SYSTEM TO BE STORED ON SITE AT ALL TIMES DURING CONSTRUCTION.

5. TEMPORARY BACKFLOW PREVENTION AND FLOW METERING SHALL MEET THE REQUIREMENTS OF THE CITY OF GLOVERSVILLE MUNICIPAL WATER DEPARTMENT AND NYS DEPARTMENT OF HEALTH REGULATIONS.

6. CONTRACTOR SHALL PROVIDE SHOP DRAWINGS FOR TEMPORARY DOMESTIC BYPASS PUMPING. SHOP DRAWINGS SHALL BE STAMPED AND SIGNED BY A LICENSED PROFESSIONAL ENGINEER IN THE THE STATE OF NEW YORK.

7. THE TEMPORARY DOMESTIC PUMP SYSTEM AND HOSES SHALL BE DISINFECTED PRIOR TO USE AND SHALL MEET NSF REQUIREMENTS FOR POTABLE WATER USE.

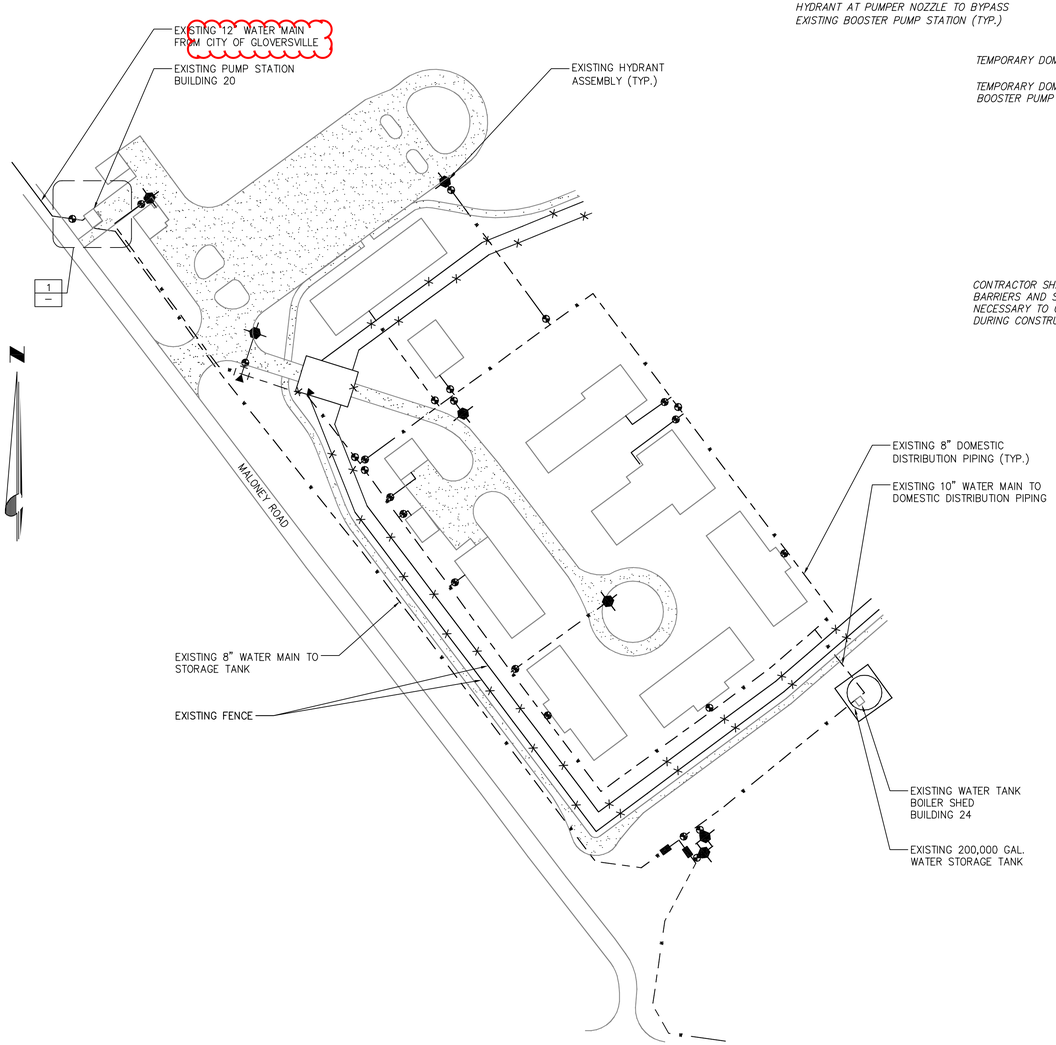

EXISTING SITE PLAN
SCALE: NTS

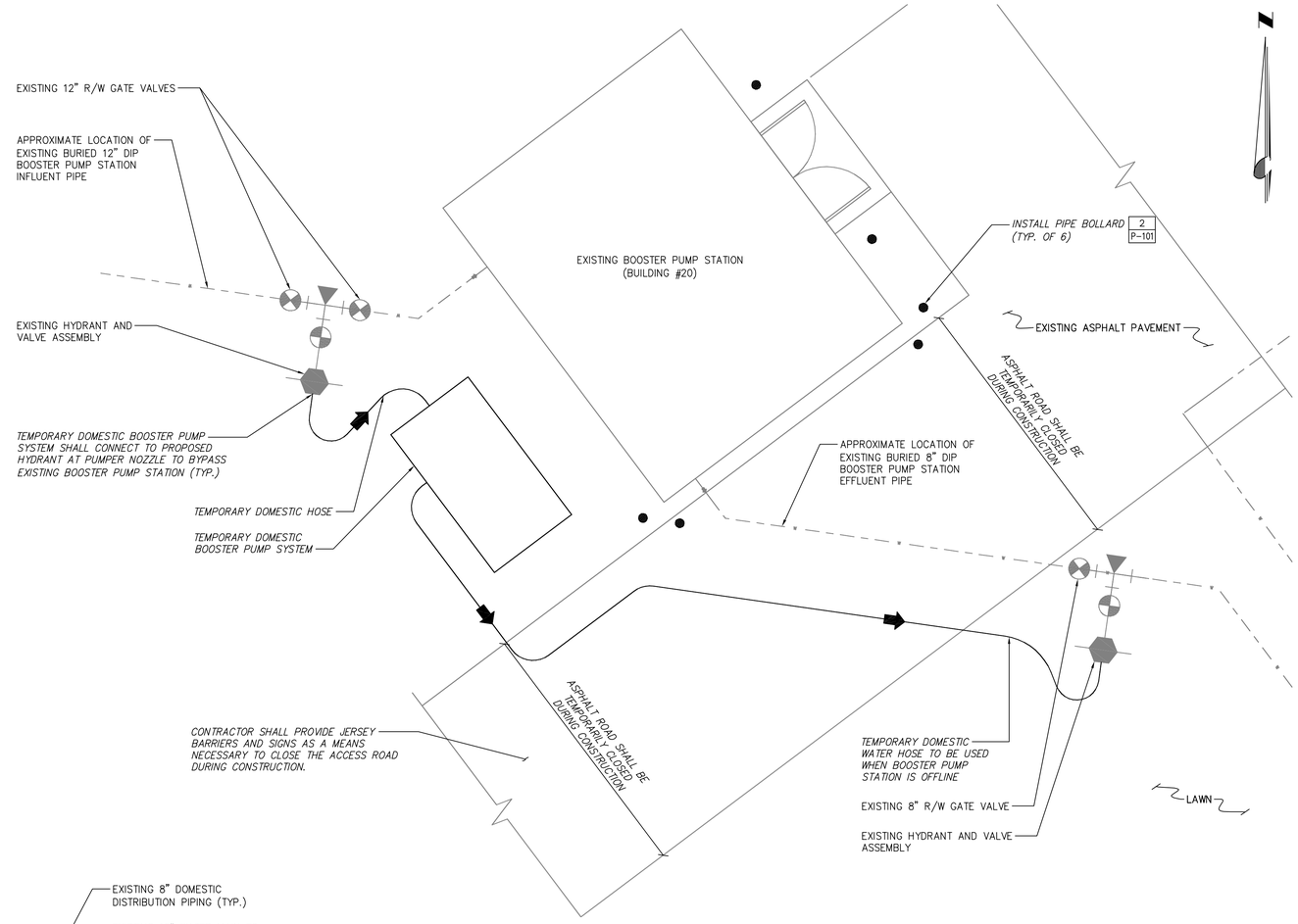

1 BOOSTER PUMP STATION AREA SITE PLAN
SCALE: NTS

NYS OFFICE OF GENERAL SERVICES
Serving New York
ANDREW M. CUOMO
Governor
ROANN M. DESTITO
Commissioner

CONSULTANT

Drawing Copyright © 2014

CHA
III Winners Circle. PO Box 5269 · Albany, NY 12205-0269
Main: (518) 453-4500 · www.chacompanies.com

WARNING:
THE ALTERATION OF THIS MATERIAL IN ANY WAY, UNLESS DONE UNDER THE DIRECTION OF A COMPARABLE PROFESSIONAL, I.E. ARCHITECT FOR AN ARCHITECT, ENGINEER FOR AN ENGINEER OR LANDSCAPE ARCHITECT FOR A LANDSCAPE ARCHITECT, IS A VIOLATION OF THE NEW YORK STATE EDUCATION LAW AND/OR REGULATIONS AND IS A CLASS 'A' MISDEMEANOR.

STATE OF NEW YORK · MICHAEL E. HOLLOWAY · 068351 · LICENSED PROFESSIONAL ENGINEER

CONTRACT:

TITLE:
BOOSTER PUMP STATION IMPROVEMENT PROJECT
BUILDING NO. 20

LOCATION:
HALE CREEK CORRECTIONAL FACILITY
279 MALONEY ROAD
JOHNSTOWN, NY 12095

CLIENT:
NYS OFFICE OF GENERAL SERVICES

MARK	DATE	DESCRIPTION
	6/11/2015	NYSDOH COMMENTS
	3/27/2015	FINAL SUBMITTAL
	9/26/2014	100% SUBMITTAL

PROJECT NUMBER:	43625 – P
DESIGNED BY:	KLH
DRAWN BY:	SNP
FIELD CHECK:	
APPROVED:	MBA

SHEET TITLE:
TEMPORARY BOOSTER PUMP STATION BYPASS PUMPING PLAN

DRAWING NUMBER:
P–001

SHEET 3 OF 11

Jun 16,2015 – 11:20am
V:\Projects\ANY\X3\25050\CADD_ACAD_ CONTRACT 1G BOOSTER PUMP STATION\C1G_P-001_25050.dwg
36x24 PLOT SHEET

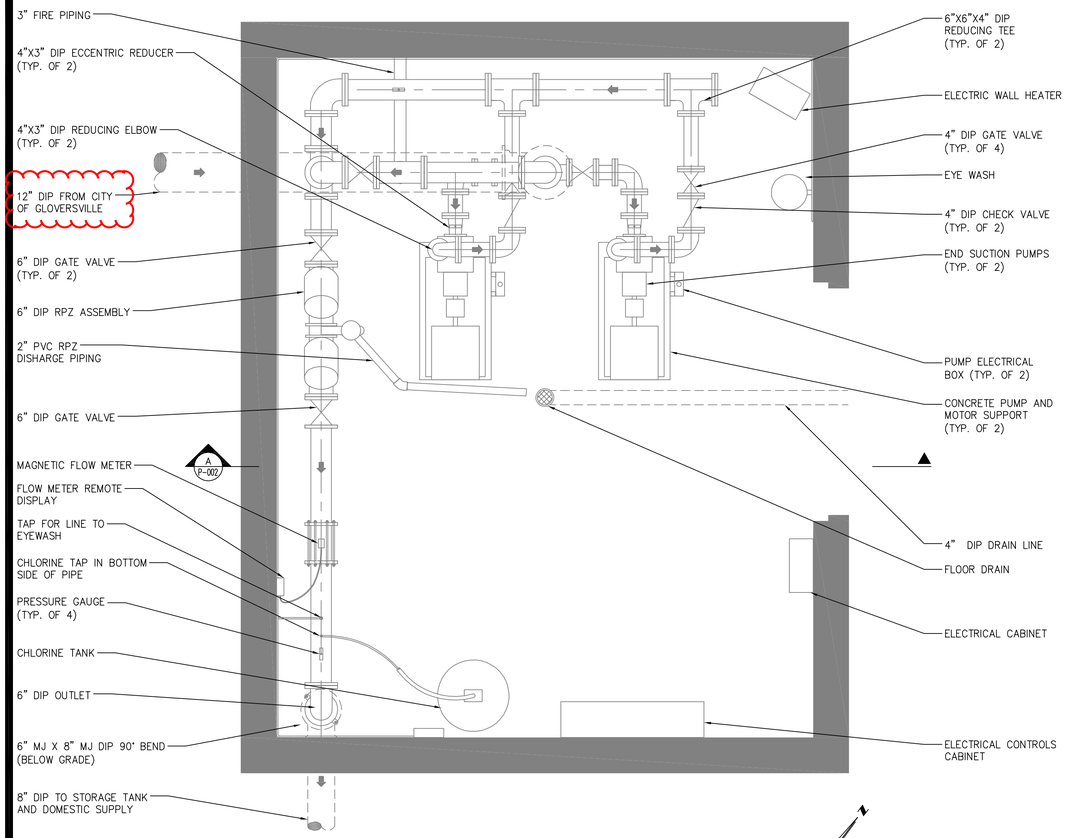

EXISTING BOOSTER PUMP STATION PLAN
SCALE: 1/2" = 1'-0"

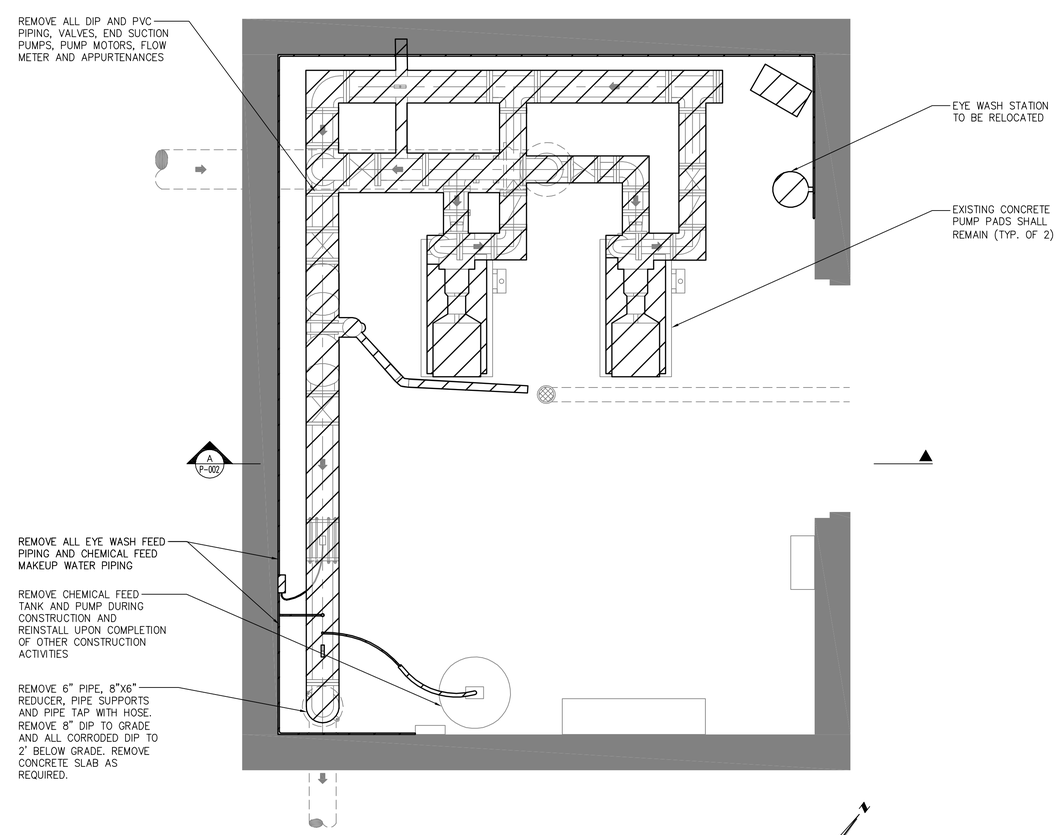

BOOSTER PUMP STATION REMOVAL PLAN
SCALE: 1/2" = 1'-0"

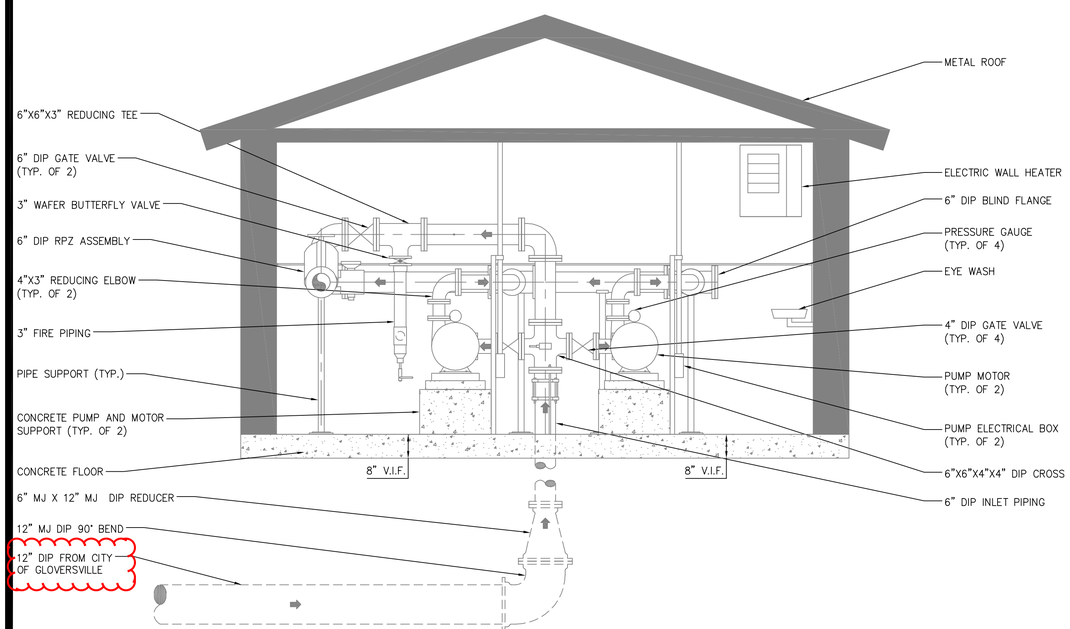

A EXISTING BOOSTER PUMP STATION SECTION
SCALE: 1/2" = 1'-0"

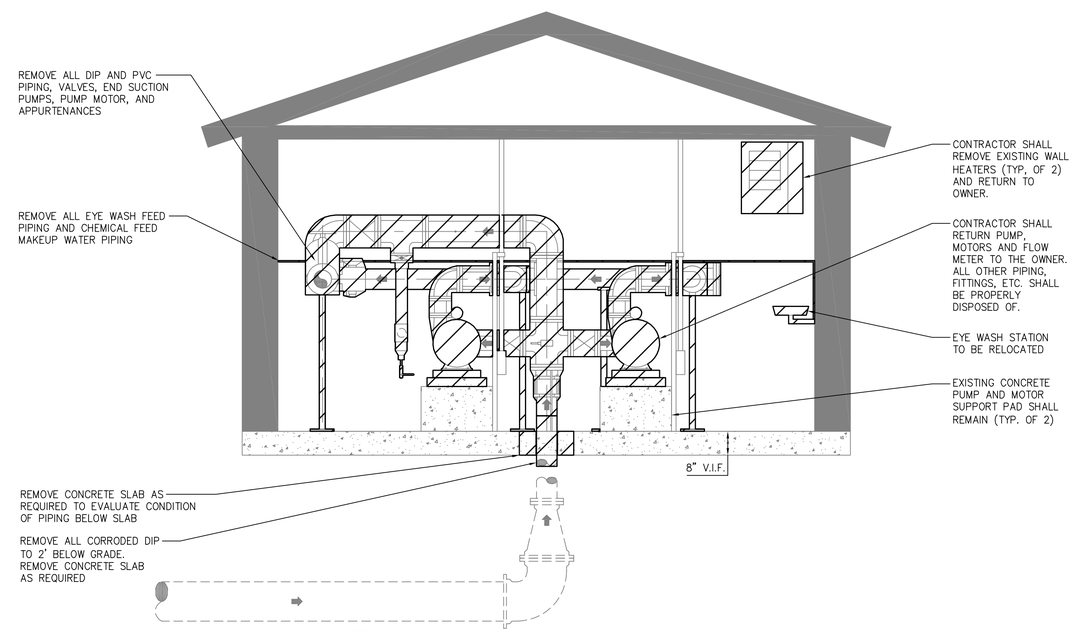

A BOOSTER PUMP STATION REMOVAL SECTION
SCALE: 1/2" = 1'-0"

NYS OFFICE OF GENERAL SERVICES
Serving New York

ANDREW M. CUOMO
Governor
ROANN M. DESTITO
Commissioner

CONSULTANT

Drawing Copyright © 2014

CHA
III Winners Circle. PO Box 5269 · Albany, NY 12205-0269
Main: (518) 453-4500 · www.chacompanies.com

WARNING:
THE ALTERATION OF THIS MATERIAL IN ANY WAY, UNLESS DONE UNDER THE DIRECTION OF A COMPARABLE PROFESSIONAL, I.E. ARCHITECT FOR AN ARCHITECT, ENGINEER FOR AN ENGINEER OR LANDSCAPE ARCHITECT FOR A LANDSCAPE ARCHITECT, IS A VIOLATION OF THE NEW YORK STATE EDUCATION LAW AND/OR REGULATIONS AND IS A CLASS 'A' MISDEMEANOR.

STATE OF NEW YORK · MICHAEL E. HOLLOWAY · 068351 · LICENSED PROFESSIONAL ENGINEER

CONTRACT:

TITLE:
BOOSTER PUMP STATION IMPROVEMENT PROJECT
BUILDING NO. 20

LOCATION:
HALE CREEK CORRECTIONAL FACILITY
279 MALONEY ROAD
JOHNSTOWN, NY 12095

CLIENT:
NYS OFFICE OF GENERAL SERVICES

MARK	DATE	DESCRIPTION
	6/11/2015	NYSDOH COMMENTS
	3/27/2015	FINAL SUBMITTAL
	9/26/2014	100% SUBMITTAL

PROJECT NUMBER:	43625 – P
DESIGNED BY:	KLH
DRAWN BY:	SNP
FIELD CHECK:	
APPROVED:	MBA

SHEET TITLE:
BOOSTER PUMP STATION; EXISTING CONDITIONS AND REMOVAL PLANS AND SECTIONS

DRAWING NUMBER:
P–002

SHEET 4 OF 11

Jun 16,2015 – 11:20am
V:\Projects\ANY\X3\25050\CADD_ACAD_ CONTRACT 1G BOOSTER PUMP STATION\C16_P-002_25050.dwg
36x24 PLOT SHEET

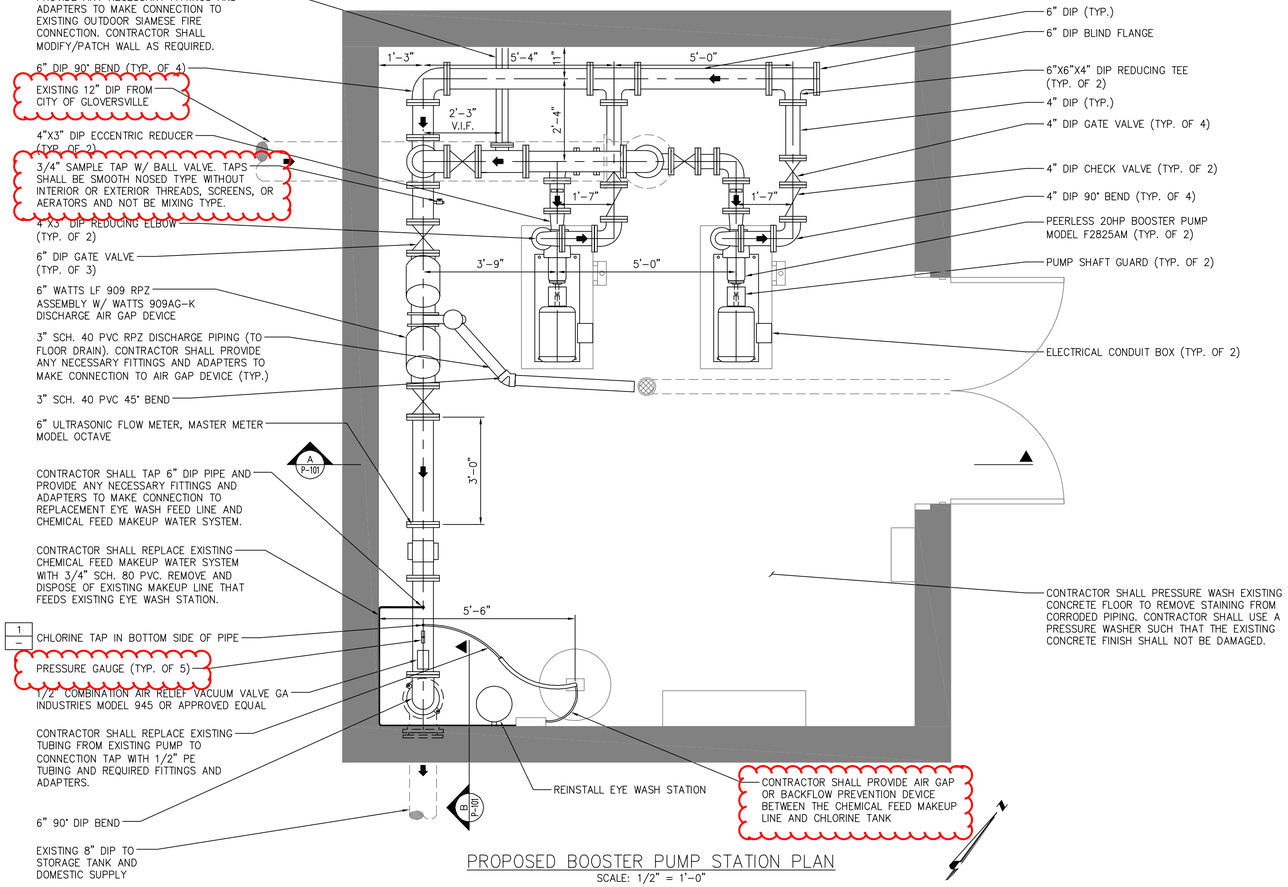

PROPOSED BOOSTER PUMP STATION PLAN
SCALE: 1/2" = 1'-0"

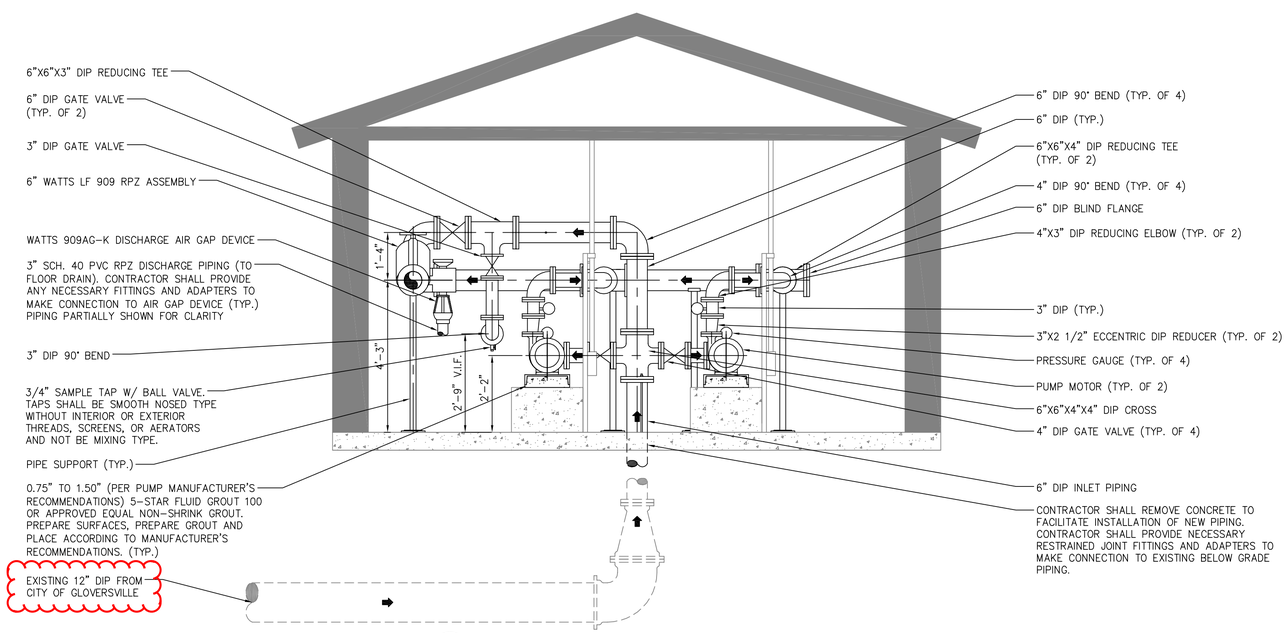

A PROPOSED BOOSTER PUMP STATION SECTION
SCALE: 1/2" = 1'-0"

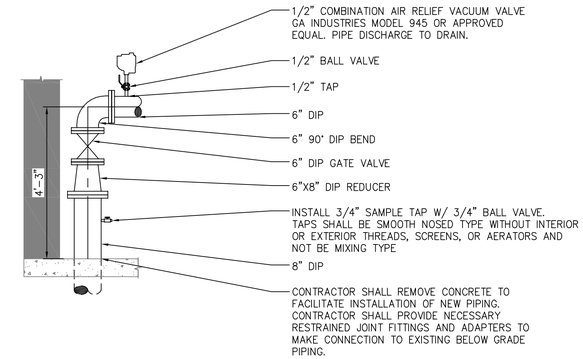

B PROPOSED EFFLUENT PIPING DETAIL
SCALE: 1/2" = 1'-0"

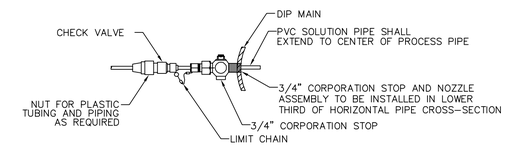

1 CHEMICAL INJECTION DETAIL
SCALE: NTS

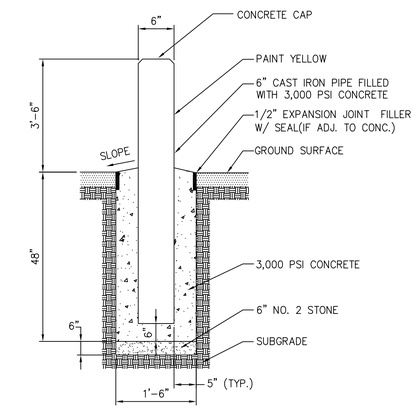

NOTE:

1. EXACT LOCATION OF PIPE BOLLARDS SHALL BE REVIEWED WITH DIRECTOR'S REPRESENTATIVE PRIOR TO INSTALLATION.

2 PIPE BOLLARD DETAIL
SCALE: NTS

NYS OFFICE OF GENERAL SERVICES
Serving New York
ANDREW M. CUOMO
Governor
ROANN M. DESTITO
Commissioner

CONSULTANT

Drawing Copyright © 2014

CHA
III Winners Circle. PO Box 5269 · Albany, NY 12205-0269
Main: (518) 453-4500 · www.chacompanies.com

WARNING:

THE ALTERATION OF THIS MATERIAL IN ANY WAY, UNLESS DONE UNDER THE DIRECTION OF A COMPARABLE PROFESSIONAL, I.E. ARCHITECT FOR AN ARCHITECT, ENGINEER FOR AN ENGINEER OR LANDSCAPE ARCHITECT FOR A LANDSCAPE ARCHITECT, IS A VIOLATION OF THE NEW YORK STATE EDUCATION LAW AND/OR REGULATIONS AND IS A CLASS 'A' MISDEMEANOR.

STATE OF NEW YORK · MICHAEL E. HOLOHAN · 068351 · LICENSED PROFESSIONAL ENGINEER

CONTRACT:

TITLE:
BOOSTER PUMP STATION IMPROVEMENT PROJECT
BUILDING NO. 20

LOCATION:
HALE CREEK CORRECTIONAL FACILITY
279 MALONEY ROAD
JOHNSTOWN, NY 12095

CLIENT:
NYS OFFICE OF GENERAL SERVICES

MARK	DATE	DESCRIPTION
	6/11/2015	NYSDOH COMMENTS
	3/27/2015	FINAL SUBMITTAL
	9/26/2014	100% SUBMITTAL

PROJECT NUMBER:	43625 – P
DESIGNED BY:	KLH
DRAWN BY:	SNP
FIELD CHECK:	
APPROVED:	MBA

SHEET TITLE:
PROPOSED BOOSTER PUMP STATION PLAN AND SECTION

DRAWING NUMBER:
P–101

SHEET 5 OF 11

Jun 16,2015 – 11:21am
V:\Projects\ANY\X3\25050\CADD_ACAD_ CONTRACT 1G BOOSTER PUMP STATION\C1G_P-101_25050.dwg
36x24 PLOT SHEET

SECTION 331300

DISINFECTION OF WATER UTILITY DISTRIBUTION

PART 1 GENERAL

1.01 QUALITY ASSURANCE

A. Conform to provisions of AWWA C-651 for water line disinfection. Do not use Tablet Method therein.

B. Conform to provisions of AWWA C-652 for water tank disinfection.

C. Comply with all requirements of the New York State Department of Health for disinfection of potable water lines, valves, hydrants, storage tanks, and appurtenances.

1.02 SUBMITTALS

A. Contract Closeout Submittals:
   1. Test Results.

PART 2 PRODUCTS

2.01 DISINFECTANT

A. Hypochlorites meeting AWWA B300.

2.02 TEST KITS

A. High range test kit for chlorine residual (0-200 mg/1) Hach Chemical Co. Model CN-21P.

B. DPD chlorine residual test kit (0-3.5 mg/1) Hach Chemical Co. Model CN-66.

C. Test kits to remain property of the Contractor.

PART 3 EXECUTION

3.01 DISINFECTION - WATER MAINS

A. Flush mains with clear water at a minimum rate of 2.5 fps prior to disinfection. See Table 1.

TABLE 1 - WATER MAIN FLUSHING DATA		
PIPE DIAMETER (INCHES)	**FLUSHING RATE GPM @ 2.5 fps**	**HYDRANT OPENINGS @ 40 psi**
2	25	one - 2-1/2
4	100	one - 2-1/2
6	220	one - 2-1/2
8	390	one - 2-1/2
10	610	one - 2-1/2
12	880	one - 2-1/2
14	1200	two - 2-1/2
16	1570	two - 2-1/2

B. Hypochlorites: Apply solutions to water mains with a gasoline or electrically powered chemical feed pump designed for feeding chlorine solutions.

C. Application (Continuous Feed Method).

1. Connect chlorinator or force pump to water main upstream from point of repair or replacement, or new lines.
2. Proportion application rate of chlorine solution to obtain a minimum concentration of 50 mg/1 of available chlorine. Use high range test kit to determine concentration. See Table 2.

TABLE 2 - QUANTITY OF DISINFECTANT REQUIRED FOR 50 mg/l OF AVAILABLE CHLORINE PER 100 FT. OF PIPE							
PIPE DIAMETER (INCHES)	**POUNDS**		**OUNCES**			**QUARTS**	
	Cl GAS	**SOLUTION 70%**	**HYPOCHLORITE**				
			70%	**14.7%**	**5.25%**	**14.7%**	**5.25%**
2	0.1	0.1	0.2	0.8	2.1	0.1	0.1
4	0.1	0.1	0.6	3.0	8.3	0.1	0.3
6	0.1	0.1	1.4	6.7	18.7	0.2	0.6
8	0.1	0.2	2.5	11.9	33.2	0.4	1.1
10	0.2	0.3	3.9	18.5	51.9	0.6	1.6
12	0.3	0.4	5.6	26.7	74.7	0.9	2.4
14	0.4	0.5	7.6	36.3	102.0	1.2	3.2
16	0.5	0.7	10.1	47.5	133.0	1.5	4.2

3. In the absence of a meter, determine rate either by placing a pitot gage at discharge or by measuring the time to fill a container of known volume. See Table 3.

TABLE 3 - TIME FOR DISINFECTANT TO FLOW THROUGH 100 FT. OF PIPE - MINUTES			
PIPE DIAMETER (INCHES)	**@ 25 GPM**	**@ 100 GPM**	**@ 500 GPM**
2	0.7	0.2	0.04
4	2.6	0.7	0.13
6	5.9	1.5	0.3
8	10.5	2.6	0.5
10	16.3	4.1	0.8
12	23.5	5.9	1.2
14	32.0	8.0	1.6
16	41.8	10.5	2.1
18	52.9	13.2	2.7
24	94.0	23.5	4.7

4. Continue to apply chlorine solution until it reaches discharge. Check for the presence of chlorine at discharge. Use DPD chlorine residual test kit.
5. Maintain chlorinated water in the main for a minimum of 24 hours. At the end of this period chlorine concentration shall be at least 25 mg/1. Use high range test kit to determine concentration.
6. Operate all valves and hydrants to insure their proper disinfection.
7. Prevent back flow of super chlorinated water into existing distribution system.

E. Final Flushing:
1. After a 24-hour retention period, flush main until maximum chlorine concentration is 1.0 mg/1. Use DPD chlorine residual test kit.
2. Discharge super chlorinated water in a manner that will not adversely affect plants and animals. Comply with applicable State regulations for waste discharge.

F. Bacteriological Tests: Contact local health units for sampling criteria and procedures. Local health units may have more stringent criteria.
1. Test water main for bacteriological quality before putting pipe into service. A minimum of two successive sets of samples shall be taken at 24-hour intervals. Both sets of samples shall indicate bacteriological safe water before putting the facility in operation. Pay all expenses incurred for testing.
2. Tests shall be conducted by a laboratory approved by the New York State Health Dept.

G. Give all test results to Director's Representative.
1. Should test results prove any part of the system bacteriologically unsafe, repeat disinfection procedures until satisfactory results are obtained.

3.02 DISINFECTION - WATER TANKS

A. Thoroughly remove dirt and loose material from interior of tank.

B. Disinfect tank using one of the following three procedures (Note that Procedure 1 does not require draining tank after chlorine application unless required to meet paragraph 3.02 C below).

Procedure 1: Direct application of chlorine solution to interior surfaces of tank.

1. Dissolve one ounce HTH (70 percent calcium hypochlorite) as a paste in each 26 gallons of clean water; or add 4 fluid ounces of 5 percent sodium hypochlorite to each 8 gallons of clean water; or add 4 fluid ounces of 14 percent sodium hypochlorite to each 24 gallons of clean water. Each of these solutions has a 200 mg/1 concentration of available chlorine.
2. Spray the chlorine solution over the inner surface of the cleaned, empty tank using tree-spraying equipment or whitewash brushes.
3. After a 30-minute retention period, fill tank with potable water and then follow the required procedure of paragraph 3.02 C. - Flushing.

Procedure 2: Adding disinfectant to water as tank is filled.

1. Dissolve 1/2 lb. HTH (70 percent calcium hypochlorite) as a paste in each 1000 gallons of water needed to fill the structure; or add 1 fluid ounce of 5 percent sodium hypochlorite to each 8 gallons of water; or add 1 fluid ounce of 14 percent sodium hypochlorite to each 24 gallons of clean water. Each of these solutions has a 50 mg/1 concentration of available chlorine. Add paste in batches as structure is being filled.
2. Allow chlorinated water to remain in tank from 6 to 24 hours. Drain tank and then follow the required procedure of paragraph 3.02 C. - Flushing.

Procedure 3: Add disinfectant with a portable chlorinator as water enters tank.

1. Add chlorine or hypochlorite solution to obtain a minimum concentration of 50 mg/1 of available chlorine.
2. Allow chlorinated water to remain in tank from 6 to 24 hours. Drain tank and then follow the required procedure of paragraph 3.02 C. - Flushing.

C. Flushing: Continuously fill and drain tank until water discharging from tank has a maximum chlorine concentration of 1.0 mg/1.
1. Discharge super chlorinated water in a manner that will not adversely affect plants and animals. Comply with applicable State regulations for waste discharge.

D. Bacteriological Tests: Contact local health units for sampling criteria and procedures. Local health units may have more stringent criteria.
1. Test water from tank for bacteriological quality before putting tank in service. A minimum of two successive sets of samples shall be taken at 24-hour intervals. Both sets of samples shall indicate bacteriological safe

water before putting the facility in operation. Pay all expenses incurred for testing.

2. Tests shall be conducted by a laboratory approved by the New York State Health Department.

E. Give all test results to the Director's Representative.

1. Should test results prove any part of the system bacteriologically unsafe, repeat disinfection procedures until satisfactory results are obtained.

END OF SECTION

SECTION 331300

DISINFECTION OF WATER UTILITY DISTRIBUTION

PART 1 GENERAL

1.01 QUALITY ASSURANCE

A. Conform to provisions of AWWA C-651 for water line disinfection. Do not use Tablet Method therein.

B. Conform to provisions of AWWA C-652 for water tank disinfection.

C. Comply with all requirements of the New York State Department of Health for disinfection of potable water lines, valves, hydrants, storage tanks, and appurtenances.

1.02 SUBMITTALS

A. Contract Closeout Submittals:
   1. Test Results.

PART 2 PRODUCTS

2.01 DISINFECTANT

A. Hypochlorites meeting AWWA B300.

2.02 TEST KITS

A. High range test kit for chlorine residual (0-200 mg/1) Hach Chemical Co. Model CN-21P.

B. DPD chlorine residual test kit (0-3.5 mg/1) Hach Chemical Co. Model CN-66.

C. Test kits to remain property of the Contractor.

PART 3 EXECUTION

3.01 DISINFECTION - WATER MAINS

A. Flush mains with clear water at a minimum rate of 2.5 fps prior to disinfection. See Table 1.

TABLE 1 - WATER MAIN FLUSHING DATA		
PIPE DIAMETER (INCHES)	**FLUSHING RATE GPM @ 2.5 fps**	**HYDRANT OPENINGS @ 40 psi**
2	25	one - 2-1/2
4	100	one - 2-1/2
6	220	one - 2-1/2
8	390	one - 2-1/2
10	610	one - 2-1/2
12	880	one - 2-1/2
14	1200	two - 2-1/2
16	1570	two - 2-1/2

B. Hypochlorites: Apply solutions to water mains with a gasoline or electrically powered chemical feed pump designed for feeding chlorine solutions.

C. Application (Continuous Feed Method).

1. Connect chlorinator or force pump to water main upstream from point of repair or replacement, or new lines.
2. Proportion application rate of chlorine solution to obtain a minimum concentration of 50 mg/1 of available chlorine. Use high range test kit to determine concentration. See Table 2.

TABLE 2 - QUANTITY OF DISINFECTANT REQUIRED FOR 50 mg/l OF AVAILABLE CHLORINE PER 100 FT. OF PIPE							
PIPE DIAMETER (INCHES)	**POUNDS**		**OUNCES**			**QUARTS**	
	Cl GAS	**SOLUTION 70%**	**HYPOCHLORITE**				
			70%	**14.7%**	**5.25%**	**14.7%**	**5.25%**
2	0.1	0.1	0.2	0.8	2.1	0.1	0.1
4	0.1	0.1	0.6	3.0	8.3	0.1	0.3
6	0.1	0.1	1.4	6.7	18.7	0.2	0.6
8	0.1	0.2	2.5	11.9	33.2	0.4	1.1
10	0.2	0.3	3.9	18.5	51.9	0.6	1.6
12	0.3	0.4	5.6	26.7	74.7	0.9	2.4
14	0.4	0.5	7.6	36.3	102.0	1.2	3.2
16	0.5	0.7	10.1	47.5	133.0	1.5	4.2

3. In the absence of a meter, determine rate either by placing a pitot gage at discharge or by measuring the time to fill a container of known volume. See Table 3.

TABLE 3 - TIME FOR DISINFECTANT TO FLOW THROUGH 100 FT. OF PIPE - MINUTES			
PIPE DIAMETER (INCHES)	**@ 25 GPM**	**@ 100 GPM**	**@ 500 GPM**
2	0.7	0.2	0.04
4	2.6	0.7	0.13
6	5.9	1.5	0.3
8	10.5	2.6	0.5
10	16.3	4.1	0.8
12	23.5	5.9	1.2
14	32.0	8.0	1.6
16	41.8	10.5	2.1
18	52.9	13.2	2.7
24	94.0	23.5	4.7

4. Continue to apply chlorine solution until it reaches discharge. Check for the presence of chlorine at discharge. Use DPD chlorine residual test kit.
5. Maintain chlorinated water in the main for a minimum of 24 hours. At the end of this period chlorine concentration shall be at least 25 mg/1. Use high range test kit to determine concentration.
6. Operate all valves and hydrants to insure their proper disinfection.
7. Prevent back flow of super chlorinated water into existing distribution system.

E. Final Flushing:
1. After a 24-hour retention period, flush main until maximum chlorine concentration is 1.0 mg/1. Use DPD chlorine residual test kit.
2. Discharge super chlorinated water in a manner that will not adversely affect plants and animals. Comply with applicable State regulations for waste discharge.

F. Bacteriological Tests: Contact local health units for sampling criteria and procedures. Local health units may have more stringent criteria.
1. Test water main for bacteriological quality before putting pipe into service. A minimum of two successive sets of samples shall be taken at 24-hour intervals. Both sets of samples shall indicate bacteriological safe water before putting the facility in operation. Pay all expenses incurred for testing.
2. Tests shall be conducted by a laboratory approved by the New York State Health Dept.

G. Give all test results to Director's Representative.
1. Should test results prove any part of the system bacteriologically unsafe, repeat disinfection procedures until satisfactory results are obtained.

3.02 DISINFECTION - WATER TANKS

A. Thoroughly remove dirt and loose material from interior of tank.

B. Disinfect tank using one of the following three procedures (Note that Procedure 1 does not require draining tank after chlorine application unless required to meet paragraph 3.02 C below).

Procedure 1: Direct application of chlorine solution to interior surfaces of tank.

1. Dissolve one ounce HTH (70 percent calcium hypochlorite) as a paste in each 26 gallons of clean water; or add 4 fluid ounces of 5 percent sodium hypochlorite to each 8 gallons of clean water; or add 4 fluid ounces of 14 percent sodium hypochlorite to each 24 gallons of clean water. Each of these solutions has a 200 mg/1 concentration of available chlorine.
2. Spray the chlorine solution over the inner surface of the cleaned, empty tank using tree-spraying equipment or whitewash brushes.
3. After a 30-minute retention period, fill tank with potable water and then follow the required procedure of paragraph 3.02 C. - Flushing.

Procedure 2: Adding disinfectant to water as tank is filled.

1. Dissolve 1/2 lb. HTH (70 percent calcium hypochlorite) as a paste in each 1000 gallons of water needed to fill the structure; or add 1 fluid ounce of 5 percent sodium hypochlorite to each 8 gallons of water; or add 1 fluid ounce of 14 percent sodium hypochlorite to each 24 gallons of clean water. Each of these solutions has a 50 mg/1 concentration of available chlorine. Add paste in batches as structure is being filled.
2. Allow chlorinated water to remain in tank from 6 to 24 hours. Drain tank and then follow the required procedure of paragraph 3.02 C. - Flushing.

Procedure 3: Add disinfectant with a portable chlorinator as water enters tank.

1. Add chlorine or hypochlorite solution to obtain a minimum concentration of 50 mg/1 of available chlorine.
2. Allow chlorinated water to remain in tank from 6 to 24 hours. Drain tank and then follow the required procedure of paragraph 3.02 C. - Flushing.

C. Flushing: Continuously fill and drain tank until water discharging from tank has a maximum chlorine concentration of 1.0 mg/1.
1. Discharge super chlorinated water in a manner that will not adversely affect plants and animals. Comply with applicable State regulations for waste discharge.

D. Bacteriological Tests: Contact local health units for sampling criteria and procedures. Local health units may have more stringent criteria.
1. Test water from tank for bacteriological quality before putting tank in service. A minimum of two successive sets of samples shall be taken at 24-hour intervals. Both sets of samples shall indicate bacteriological safe

water before putting the facility in operation. Pay all expenses incurred for testing.

2. Tests shall be conducted by a laboratory approved by the New York State Health Department.

E. Give all test results to the Director's Representative.

1. Should test results prove any part of the system bacteriologically unsafe, repeat disinfection procedures until satisfactory results are obtained.

END OF SECTION