STATE OF NEW YORK
OFFICE OF GENERAL SERVICES
DESIGN AND CONSTRUCTION GROUP
THE GOVERNOR NELSON A. ROCKEFELLER
EMPIRE STATE PLAZA
ALBANY, NY 12242

**ADDENDUM NO. 3 TO PROJECT NO. 44014**
**CONSTRUCTION WORK, HVAC WORK, PLUMBING WORK, AND ELECTRICAL WORK**
**PROVIDE CITYSCAPE COMPLEX**
**STATE PREPAREDNESS TRAINING CENTER**
**5900 AIRPORT ROAD**
**ORISKANY, NY**

August 30, 2012

**NOTE:** This Addendum forms a part of the Contract Documents. Insert it in the Project Manual. Acknowledge receipt of this Addendum in the space provided on the Bid Form.

**CHANGES TO ADDENDUM NO. 2**

1. ITEM NO. 4, Subparagraph 2.01 A.1.b.: Change "0.566 inch" minimum base metal thickness to read "0.0566 inch".

**COMMON DIVISION 0 DOCUMENTS**

2. DOCUMENT 003113 PRELIMINARY PROJECT SCHEDULE: Add attached Schedule (pages 1A thru 5A) to the end of this Document..

**CONSTRUCTION WORK SPECIFICATIONS**

3. Page 014100-2, ARTICLE 1.06 UTILITIES: Add the following Paragraph:
   "C. Coordination With Gas Utility Company:
      1. The gas utility is National Grid. The contact is Cathy Schmidt (315) 798-1910. The Work Order Number is WR#12736850. Comply with the gas utility company requirements including inspection for the incoming gas service. Pay the utility company's charges in connection with the installation and inspection of the incoming service.
      2. The required fee is $6,600."

4. SECTION 015213 STATE FIELD OFFICE: Add the attached Section (pages 015213-1 thru 015213-4 ) to the Project Manual.

5. Page 066000-1, ARTICLE 2.01 POLYESTER-RESIN/MARBLE COMPOSITE COLUMNS: Delete this Article in its entirety.

6. Page 066000-1, Paragraph 2.02 A.: Add the following Subparagraphs:
   "1. Type A: Dura Classic Tuscan Round Non Tapered Design, No. 200 DCNT Plain.
   2. Type B: Dura Classic Roman Doric Design, No. 210 DC Plain."

7. SECTION 260505 WIRING FOR GATE SYSTEMS: Add the attached Section (pages 260505-1 thru 260505-7) to the Project Manual.

8. SECTION 323113 CHAINLINK FENCE: Discard the Section bound in the Project Manual and substitute the attached Section (pages 323113-1 thru 323113-10) noted "REVISED 8/29/12".

## ELECTRICAL WORK SPECIFICATIONS

9. Page 014100-2, Paragraph 1.06 A.: Delete this Paragraph in its entirety and replace with the following:
   "A. Coordination With Electric Utility Company:
      1. Service to Cityscape Building: Comply with the utility company requirements for the incoming electric service. Pay the utility company's charges in connection with the installation of the incoming service (An allowance for the utility company's charges is included in Section 012100). The utility company is National Grid.
      2. Service to Fire Pump and Fire Pump Enclosure: The utility company is National Grid. Comply with the utility company requirements for the incoming electric service. The contact is Steven Coleman (315) 798-5120. The Work Order Number is WR # 13528538. This electrical service is NIC, and shall be provided under a concurrent project."

## CONSTRUCTION WORK DRAWINGS

10. Drawing Nos. S-101 and S-102, DRILLED PIER NOTES, Note 2: Delete this Note in its entirety and replace with the following:
    "2. ASSUME TOP OF ROCK IS AT -20'-0". IN ADDITION, ASSUME THAT SOME ROCK SOCKETING WILL BE REQUIRED TO ACHIEVE MINIMUM DEPTHS AS INDICATED. ASSUME THIRTY (30) LINEAR FEET OF ROCK SOCKETING AT DRILLED PIER TYPE P-2 AND ALSO THIRTY (30) LINEAR FEET OF ROCK SOCKETING AT DRILLED PIER TYPE P-3. NOTE THAT THERE IS A 1 TO 3 FOOT THICK LAYER OF WEATHERED SHALE LOCATED ABOVE THE SOUND SHALE. ALL DRILLED PIERS SHALL BEAR ON SOUND SHALE OR BE SOCKETED INTO SOUND SHALE."

11. Drawing No. C-502:
    a. DETAIL NO. 1: Delete this Detail in its entirety. See Addendum Drawing L-003 for revised detail.
    b. DETAIL NO. 2: Change the Note, "1-1/2 Pair Industrial Grade Ball and Socket Hinges", to read "180 degree Hinge Item No. 014005".

12. Addendum Drawings:
    a. Drawing Nos. C-106A, C-110, A-313, and L-003 noted "ADDENDUM DRAWING 8/29/12" accompany this Addendum and form part of the Contract Documents.

13. Revised Drawings:
    a. Drawing Nos. C-106, C-107, A-305, A-308, S-001, S-201, S-202, and S-203 noted "REVISED DRAWING 8/29/12" accompany this Addendum and supersede the same numbered originally issued drawings.

**ADDENDUM NO. 3 TO PROJECT NO. 44014**

**ELECTRICAL WORK DRAWINGS**

14. Revised Drawings:
    a. Drawing Nos. E-105, E-107, E-109, E-111, E-601, ES-101, ES-102, ES-103, ES-104, ES-501, and ES-502 noted "REVISED DRAWING 8/29/12" accompany this Addendum and supersede the same numbered originally issued drawings.

**END OF ADDENDUM**

James Dirolf, P.E.
Director of Design

JRC:jc

| Act ID | Description | Orig Dur |
|---|---|---|
| **Project Summary & Milestones** | | |
| M00010 | Contract Award - NTP | 0 |
| H0010 | Project Duration | 485 * |
| H0020 | Structure | 105 * |
| H0015 | Foundations / Excavation Duration | 65 * |
| M00040 | Building Water Tight | 0 |
| M00030 | CCTV System Complete | 0 |
| M00050 | Final Inspection | 0 |
| M00020 | Facility Move-In | 14 |
| **Procurement** | | |
| **Long Lead Items** | | |
| **Submittals** | | |
| SC1000 | Prep/Submit Asbestos Abatement Plan | 10 |
| SC1010 | Prep/Submit Pre-Engineer Steel | 15 |
| SE1055 | Prep/Submit CCTV System | 15 |
| SC1110 | Prep/Submit Millwork | 15 |
| SE1065 | Prep/Submit Electronic Lock Security Sys. | 15 |
| **Approvals** | | |
| AC1000 | Rev & Appr Asbestos Abatement Plan | 10 |
| AC1010 | Rev & Appr Pre-Engineer Steel | 15 |
| AE1055 | Rev & Appr CCTV System | 15 |
| AC1110 | Rev & Appr Millwork | 15 |
| AE1065 | Rev & Appr Electronic Lock Security Sys. | 15 |
| **Fabrication and Delivery** | | |
| FC1020 | Fab & Del Pre-Engineer Steel | 85 |
| FE1055 | Fab & Del CCTV System | 70 |
| FC1110 | Fab & Del Millwork | 80 |
| FE1065 | Fab & Del Electronic Lock Security System | 70 |
| **Submittals** | | |
| SC1050 | Prep/Submit HM Frames & Doors | 15 |
| SH1110 | Prep/Submit Chillers | 15 |
| SH1010 | Prep/Submit Ductwork Shop Dwg's | 15 |
| SH1050 | Prep/Submit Exhaust Fans | 15 |
| SP1060 | Prep/Submit Plumbing Fixtures | 15 |
| SH1060 | Prep/Submit Ductwork Shop Dwg's (Smoke Control) | 15 |
| SC1030 | Prep/Submit Finish Hardware | 15 |
| SE1070 | Prep/Submit Feeders | 15 |
| SE1020 | Prep/Submit Panelboards | 15 |
| SE1030 | Prep/Submit Raceways, Fittings & Accessories | 15 |
| SE1040 | Prep/Submit Outlet, Junction & Pull Boxes | 15 |
| SH1000 | Prep/Submit Pipe Hangers & Supports - HVAC | 15 |
| SH1030 | Prep/Submit Piping Insulation - HVAC | 15 |
| SH1040 | Prep/Submit HVAC Piping | 15 |
| SH1070 | Prep/Submit Pipe & Valve ID - HVAC | 15 |
| SP1000 | Prep/Submit Pipe Hangers & Supports - Plbg | 15 |
| SP1010 | Prep/Submit Pipe & Valve ID - Plbg | 15 |
| SP1030 | Prep/Submit Piping Insulation - Plbg | 15 |
| SP1040 | Prep/Submit Plumbing Pipe | 15 |
| SP1090 | Prep/Submit Sprinkler Piping | 15 |

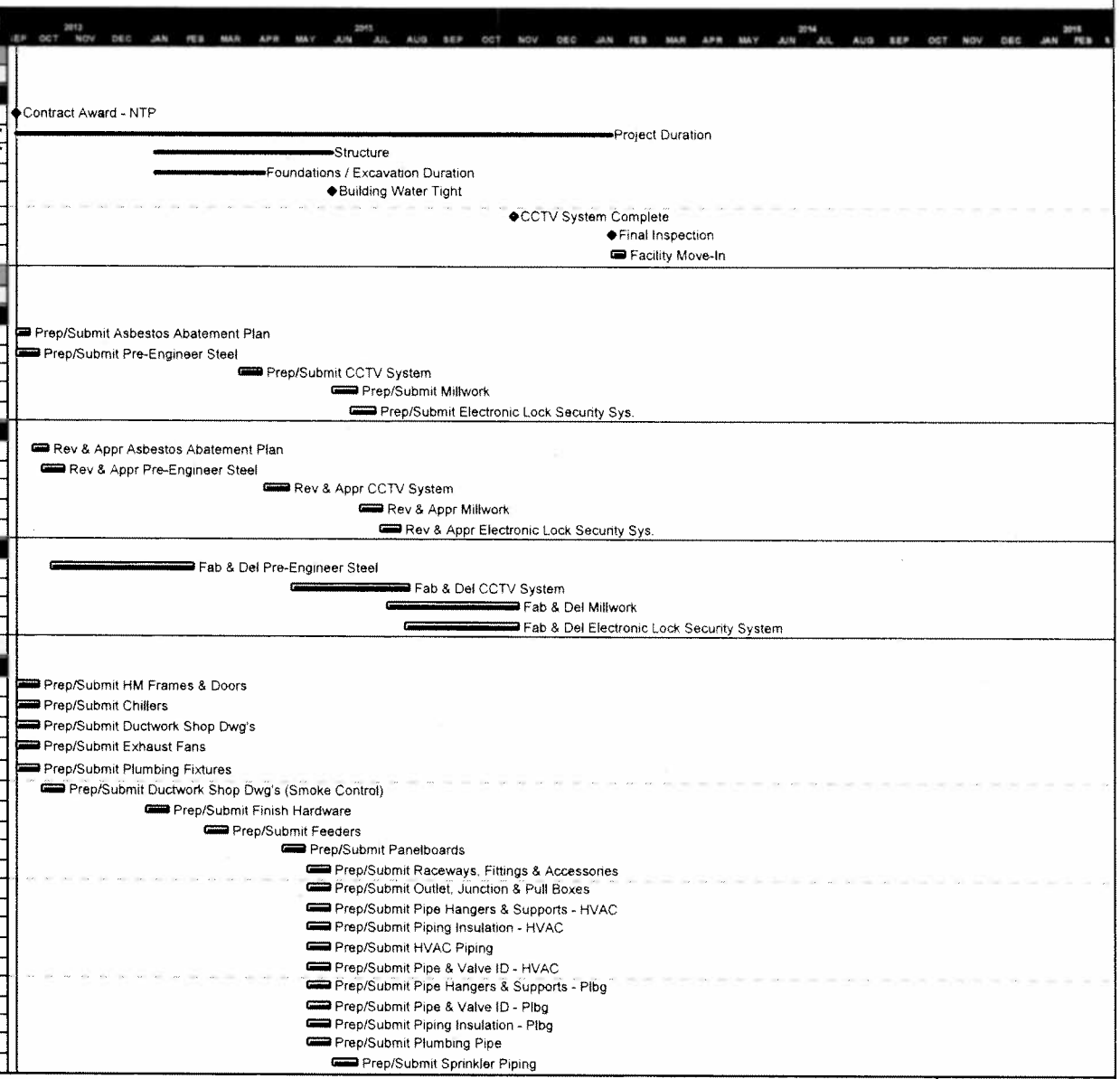


| | |
|---|---|
| Start date | 19SEP12 |
| Finish date | 04FEB14 |
| Data date | 19SEP12 |
| Run date | 16JUL12 |
| Page number | 1A |

© Primavera Systems, Inc.

**NYSOGS Project No. 44014 - C, H, P & E**
**Provide City Scape Complex**

Early bar
Progress bar
Critical bar
Summary bar
Start milestone point
Finish milestone point

| Act ID | Description | Orig Dur |
|---|---|---|
| SE1010 | Prep/Submit FA System | 15 |
| SE1050 | Prep/Submit Wiring & Wiring Devices | 15 |
| SC1060 | Prep/Submit Gypsum Drywall | 15 |
| SC1070 | Prep/Submit Ceramic Tile | 15 |
| SC1100 | Prep/Submit Painting | 15 |
| SE1000 | Prep/Submit Light Fixtures | 15 |
| SC1090 | Prep/Submit Acoustical Ceilings | 15 |
| SC1080 | Prep/Submit Flooring | 15 |
| SP1100 | Prep/Submit Sprinkler Heads | 15 |
| SH1100 | Prep/Submit Balancing of System | 15 |
| **Approvals** | | |
| AC1050 | Rev & Appr HM Frames & Doors | 15 |
| AH1110 | Rev & Appr. Chillers | 15 |
| AH1050 | Rev & Appr Exhaust Fans | 15 |
| AH1010 | Rev & Appr Ductwork Shop Dwg's | 15 |
| AP1060 | Rev & Appr Plumbing Fixtures | 15 |
| AH1060 | Rev & Appr Ductwork Shop Dwg's (Smoke Control) | 15 |
| AC1030 | Rev & Appr Finish Hardware | 15 |
| AE1070 | Rev & Appr Feeders | 15 |
| AE1020 | Rev & Appr Panelboards | 15 |
| AE1030 | Rev & Appr Interior Raceway, Fittings & Access. | 15 |
| AE1040 | Rev & Appr Outlet, Junction & Pull Boxes | 15 |
| AH1000 | Rev & Appr Pipe Hangers & Supports - HVAC | 15 |
| AH1030 | Rev & Appr Piping Insulation - HVAC | 15 |
| AH1040 | Rev & Appr HVAC Piping | 15 |
| AH1070 | Rev & Appr Pipe & Valve ID's - HVAC | 15 |
| AP1000 | Rev & Appr Pipe Hangers & Supports - Plbg | 15 |
| AP1010 | Rev & Appr Pipe & Valve ID - Plbg | 15 |
| AP1030 | Rev & Appr Insulation - Plbg | 15 |
| AP1040 | Rev & Appr Plumbing Pipe | 15 |
| AP1090 | Rev & Appr Sprinkler Piping | 15 |
| AE1010 | Rev & Appr FA System | 15 |
| AE1050 | Rev & Appr Wiring Devices | 15 |
| AC1060 | Rev & Appr Gypsum Drywall | 15 |
| AC1070 | Rev & Appr Ceramic Tile | 15 |
| AC1100 | Rev & Appr Painting - GC | 15 |
| AE1000 | Rev & Appr Light Fixtures | 15 |
| AC1090 | Rev & Appr Acoustical Ceilings | 15 |
| AC1080 | Rev & Appr Flooring | 15 |
| AP1100 | Rev & Appr Sprinkler Heads | 15 |
| AH1100 | Rev & Appr Balancing of System | 15 |
| **Fabrication & Delivery** | | |
| FC1050 | Fab & Del HM Frames | 30 |
| FH1110 | Fab & Del Chillers | 60 |
| FH1050 | Fab & Del Exhaust Fans | 45 |
| FP1150 | Fab & Del Plumbing Fixtures | 20 |
| FC1051 | Fab & Del HM Doors | 45 |
| FC1030 | Fab & Del Finish Hardware | 30 |
| FE1070 | Fab & Del Feeders | 60 |
| FH1010 | Fab & Del Ductwork | 30 |

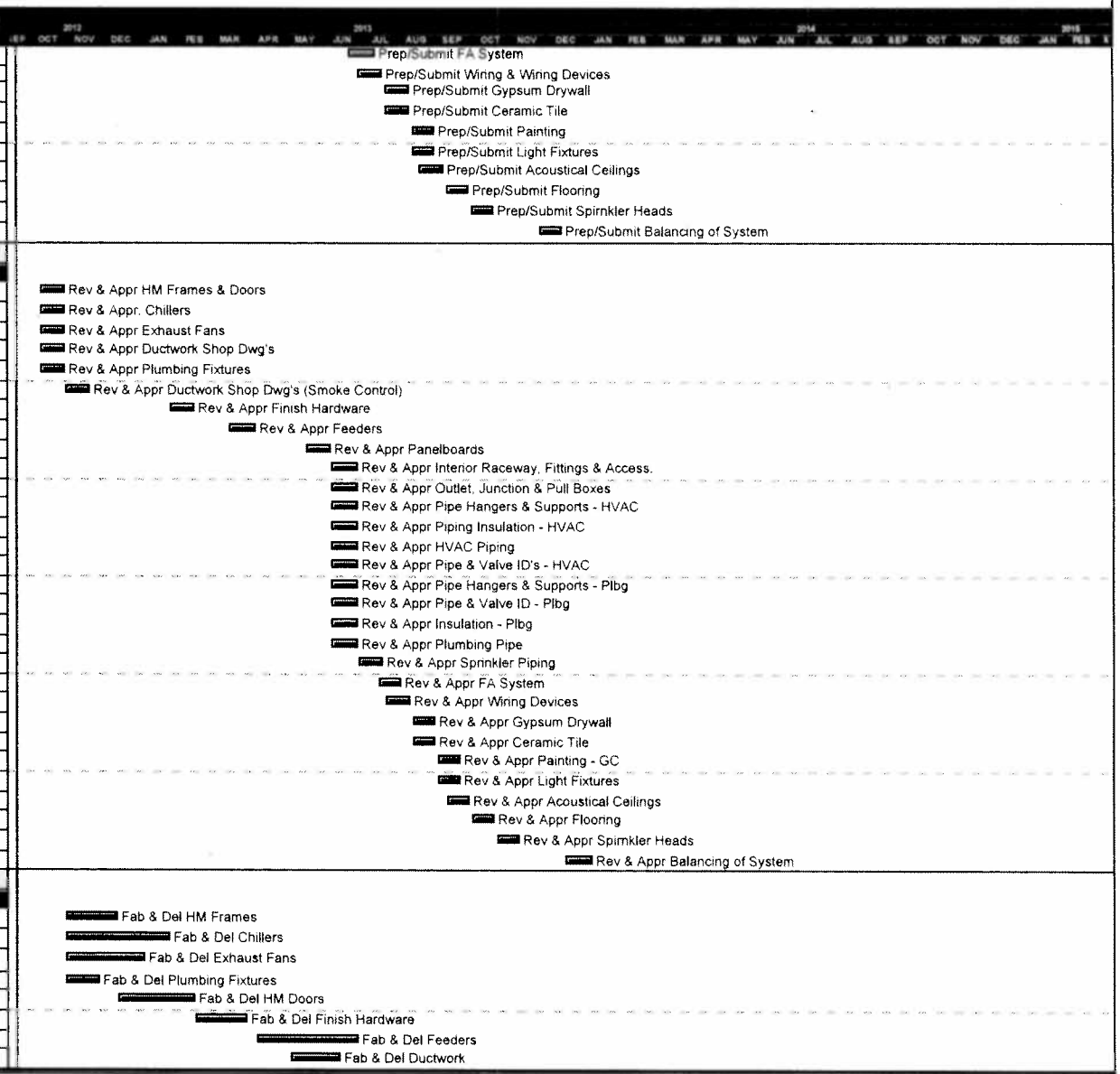


| | |
|---|---|
| Start date | 19SEP12 |
| Finish date | 04FEB14 |
| Data date | 19SEP12 |
| Run date | 16JUL12 |
| Page number | 2A |

© Primavera Systems, Inc.

**NYSOGS Project No. 44014 - C, H, P & E**
**Provide City Scape Complex**

Early bar
Progress bar
Critical bar
Summary bar
Start milestone point
Finish milestone point

| Act ID | Description | Orig Dur |
|---|---|---|
| FH1000 | Fab & Del Ductwork - (Smoke Control System) | 30 |
| FE1020 | Fab & Del Panelboards | 40 |
| FC1070 | Fab & Del Ceramic Tile | 25 |
| FE1000 | Fab & Del Light Fixtures | 20 |
| **Coordination** | | |
| CRD-100 | Coordination - North Building 1st & 2nd Floor | 10 |
| CRD-199 | Coordination Sign-Off - N. Bldg 1st & 2nd Flr | 2 |
| CRD-200 | Coordination - South Building 1st & 2nd Floor | 10 |
| CRD-299 | Coordination Sign-Off - S. Bldg 1st & 2nd Flr | 2 |
| **Construction** | | |
| **Mobilization** | | |
| GC-MB0000 | Mobilization | 5 |
| GC-MB0010 | Project Kick-Off Meeting | 1 |
| GC-MB0020 | Install Field Trailers | 5 |
| GC-MB0030 | Asbestos Abatement Postings & Permits | 10 |
| **Demolition** | | |
| GCD-0020 | ACM Removals | 20 |
| GCD-0010 | Install Temp. Partitions & Enclosures | 4 |
| GCD-0030 | Interior Demolition | 20 |
| GCD-0040 | Existing Building Demolition | 20 |
| **Structure / Building Envelope** | | |
| **Foundations / Structure** | | |
| GC-0010 | Drill Caisons/Build Piers North Elevation | 10 |
| GC-0030 | Excavation for Footings / Foundations North Elev | 5 |
| GC-0020 | Drill Caisons/Build Piers South Elevation | 10 |
| GC-0040 | Form & Pour Footings North Elevation | 10 |
| GC-0050 | Excavation for Footings / Foundations South Elev | 5 |
| GC-0060 | Form & Pour Footings South Elevation | 10 |
| GC-0100 | Erect Steel North Elevation | 15 |
| GC-0070 | Backfill & Compact Foundation Footings | 5 |
| GC-0110 | Erect Steel South Elevation | 15 |
| GC-0120 | Install Roofing System | 20 |
| **Foundations Building Slab** | | |
| GC-0045 | Inst. Radon Piping & U/G Utilities North Elev | 10 |
| GC-0080 | Pour Concrete Slab North Elevation | 10 |
| GC-0075 | Inst. Radon Piping & U/G Utilities South Elev | 10 |
| GC-0090 | Vapor Barier/ Mesh/ Pour Concrete Slab South | 10 |
| **West Building Exterior Work** | | |
| GC-0150 | Install Exterior Framing | 5 |
| GC-0160 | Install Sheathing & Finish Brick | 15 |
| GC-0170 | Erect / Install Composite Metal Panels | 10 |
| GC-0230 | Erect /Install Composite Metal Panels North Side | 15 |
| GC-0180 | Install Aluminum Windows/StoreFront | 15 |
| **South Building Exterior Work** | | |
| GC-0190 | Install Exterior Framing | 5 |
| GC-0200 | Install Sheathing & Finish Brick | 15 |
| GC-0210 | Erect / Install Composite Metal Panels | 10 |
| GC-0220 | Install Aluminum Windows/StoreFront | 15 |
| GC-0240 | Erect / Install Composite Metal Panels East Side | 15 |

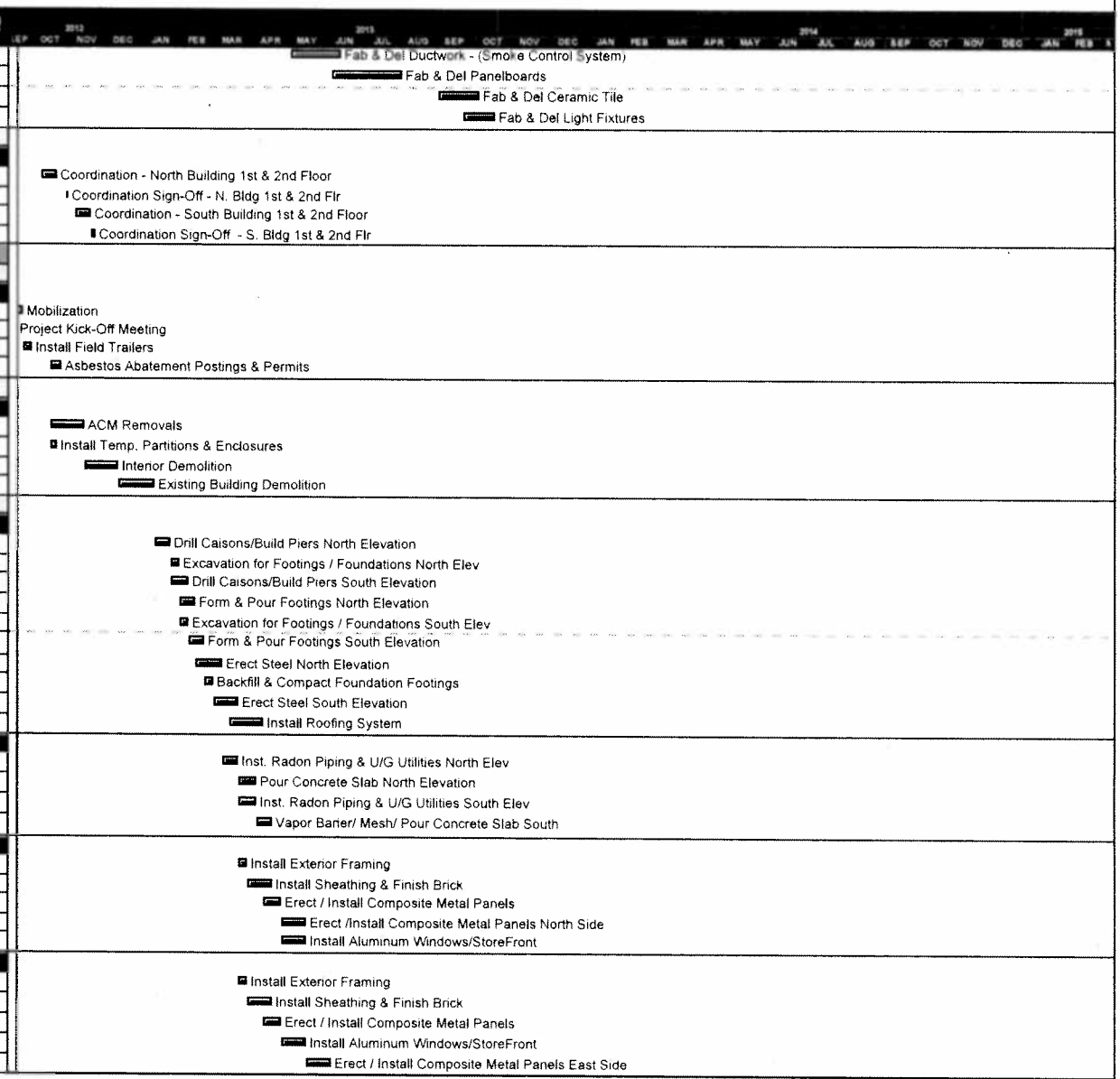


| | |
|---|---|
| Start date | 19SEP12 |
| Finish date | 04FEB14 |
| Data date | 19SEP12 |
| Run date | 16JUL12 |
| Page number | 3A |

© Primavera Systems, Inc.

**NYSOGS Project No. 44014 - C, H, P & E**
**Provide City Scape Complex**

Early bar
Progress bar
Critical bar
Summary bar
Start milestone point
Finish milestone point

| Act ID | Description | Orig Dur |
|---|---|---|
| **South & West Bldg Int. Work** | | |
| GC-0250 | Install Interior Framing | 5 |
| GC-0260 | Install Sheathing & Finish Brick | 15 |
| GC-0270 | Install Metal Catwalk | 15 |
| GC-0280 | Install Aluminun Storefront and Windows | 15 |
| **North & East Bldg Int. Work** | | |
| GC-0290 | Install Interior Framing | 5 |
| GC-0300 | Install CMU / Brick Wall | 15 |
| GC-0310 | Install Doors and Windows | 15 |
| **Interior Work** | | |
| **North Building** | | |
| NB01-0005 | Layout Partitions | 5 |
| NB01-0010 | Ins. Ductwork & Ductwork Smoke Sys., Test & Insu | 25 |
| NB01-0020 | Rough-in O/H Plumbing, Test and Insulate | 25 |
| NB01-0030 | Rough-in O/H Electrical | 25 |
| NB01-0040 | Rough-In HVAC Piping, Test & Insulate | 25 |
| NB01-0050 | Rough-In Sprinkler Mains/Branches | 20 |
| NB01-0060 | Wall Framing & Door Frames | 15 |
| NB01-0035 | Rough-In Fire Alarm / Training Fire Alarm System | 30 |
| NB01-0070 | Rough-In Wall Plumbing | 20 |
| NB01-0080 | Rough-In Wall Electrical | 20 |
| NB01-0085 | Rough-In CCTV / Install CCTV | 30 |
| NB01-0090 | Install Drywall | 15 |
| NB01-0100 | Tape & Spackle Walls and Ceilings | 10 |
| NB01-0110 | Prime Paint & First Coat | 10 |
| NB01-0120 | Install Ceiling Grid | 15 |
| NB01-0140 | Install Ceramic Tile | 10 |
| NB01-0130 | Install Light Fixtures | 15 |
| NB01-0150 | Install VCT & Flooring | 10 |
| NB01-0160 | Install Plumbing Fixtures / Non-Working Fixtures | 10 |
| NB01-0200 | Install Door and Hardware | 15 |
| NB01-0170 | Install Millwork | 20 |
| NB01-0205 | Install Electronic Security Locks | 20 |
| NB01-0180 | Install Diffusers | 10 |
| NB01-0190 | Install Sprinkle Heads | 10 |
| NB01-0220 | Install Carpeting | 5 |
| NB01-0210 | Install Accoustical Ceiling Tile | 15 |
| NB01-0230 | Final Paint & Touch-Up | 10 |
| NB01-0250 | Final Cleaning | 10 |
| NB01-0260 | Floor Substantially Complete | 0 |
| NB01-0240 | Install Owner FF&E | 20 |
| **South Building** | | |
| SB01-0010 | Layout Partitions | 5 |
| SB01-0020 | Ins. Ductwork & Ductwork Smoke Sys., Test & Insu | 25 |
| SB01-0030 | Rough-in O/H Plumbing, Test and Insulate | 25 |
| SB01-0040 | Rough-in O/H Electrical | 25 |
| SB01-0050 | Rough-In HVAC Piping, Test & Insulate | 25 |
| SB01-0060 | Rough-In Sprinkler Mains/Branches | 20 |
| SB01-0070 | Wall Framing & Door Frames | 15 |
| SB01-0080 | Rough-In Wall Plumbing | 20 |
| SB01-0090 | Rough-In Wall Electrical | 20 |
| SB01-0100 | Install Drywall | 15 |

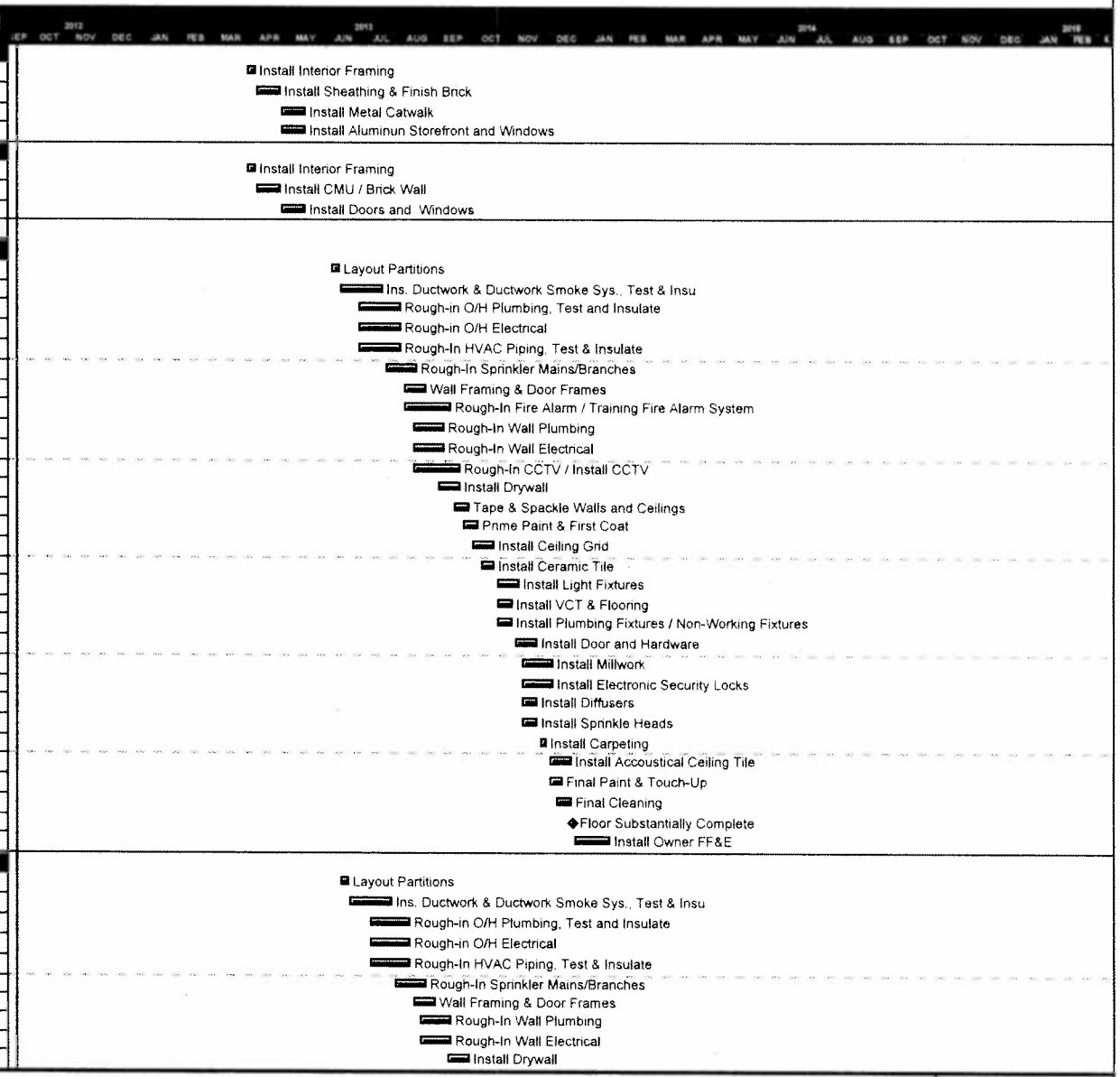


| | |
|---|---|
| Start date | 19SEP12 |
| Finish date | 04FEB14 |
| Data date | 19SEP12 |
| Run date | 16JUL12 |
| Page number | 4A |

© Primavera Systems, Inc.

**NYSOGS Project No. 44014 - C, H, P & E**
**Provide City Scape Complex**

Early bar
Progress bar
Critical bar
Summary bar
Start milestone point
Finish milestone point

| Act ID | Description | Orig Dur |
|---|---|---|
| SB01-0150 | Rough-In CCTV / Install CCTV | 25 |
| SB01-0110 | Tape & Spackle Walls and Ceilings | 10 |
| SB01-0120 | Prime Paint & First Coat | 10 |
| SB01-0130 | Install Ceiling Grid | 15 |
| SB01-0170 | Install Plumbing Fixtures | 10 |
| SB01-0160 | Install VCT & Flooring | 15 |
| SB01-0140 | Install Light Fixtures | 15 |
| SB01-0200 | Install Door and Hardware | 15 |
| SB01-0175 | Install Millwork | 20 |
| SB01-0180 | Install Diffusers | 10 |
| SB01-0190 | Install Sprinkle Heads | 10 |
| SB01-0205 | Install Security Electronic Locks | 20 |
| SB01-0220 | Install Carpeting | 15 |
| SB01-0210 | Install Accoustical Ceiling Tile | 15 |
| SB01-0230 | Final Paint & Touch-Up | 10 |
| SB01-0240 | Final Cleaning | 10 |
| SB01-0260 | Floor Substantially Complete | 0 |
| SB01-0250 | Install Owner FF&E | 20 |
| Testing & System Start-Up | | |
| T0040 | CCTV / Fire Alarm Commissioning | 10 |
| T0020 | Test/Commission Serucity Lock System | 10 |
| T0030 | Balance & Commission HVAC | 5 |
| T0010 | Final Punchlist | 10 |

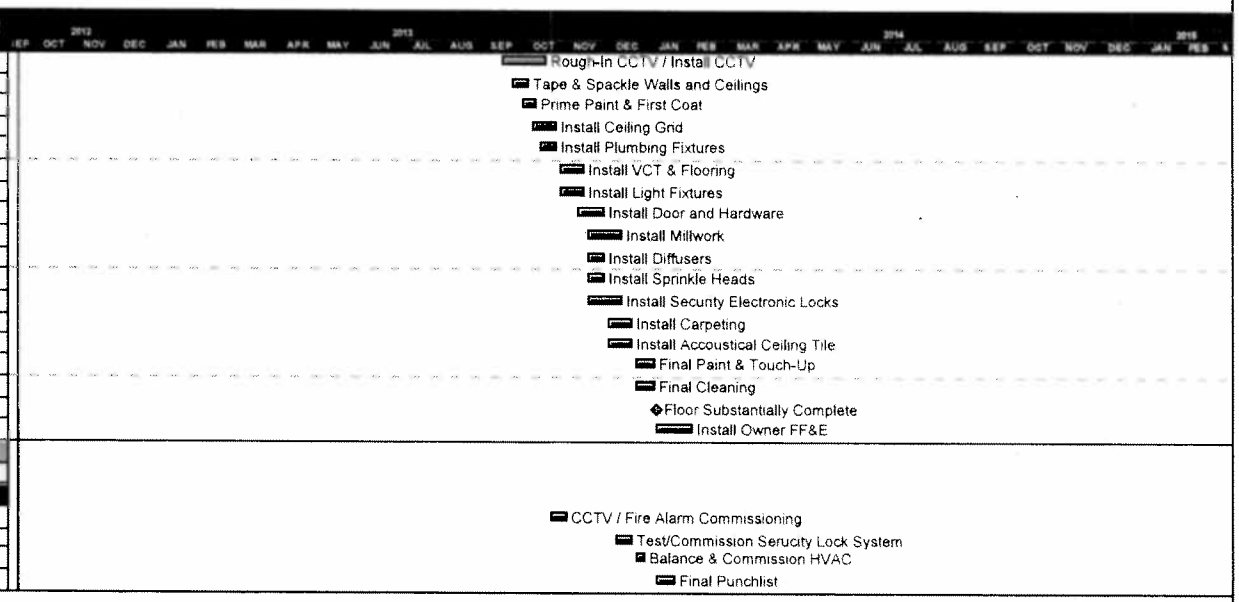


| | |
|---|---|
| Start date | 19SEP12 |
| Finish date | 04FEB14 |
| Data date | 19SEP12 |
| Run date | 16JUL12 |
| Page number | 5A |

© Primavera Systems, Inc.

**NYSOGS Project No. 44014 - C, H, P & E**
**Provide City Scape Complex**

- Early bar
- Progress bar
- Critical bar
- Summary bar
- Start milestone point
- Finish milestone point

# SECTION 015213

# STATE FIELD OFFICE

## PART 1 GENERAL

### 1.01 SECTION INCLUDES

A. Provide and maintain a field office comprised of new custom built mobile or relocatable office units, new furniture, and new equipment, stair and ramp for the sole use of the Director's Representative and staff. Include temporary services and accessories necessary for use of the items specified.

### 1.02 SUBMITTALS

A. Waiver of Submittals: The "Waiver of Certain Submittal Requirements" in Section 013300 does not apply to this Section.

B. Shop Drawings:
   1. Site Plan: Show location of field office (see drawings for location). Indicate utility services, and connections.

C. Product Data: Catalog sheets, specifications, and installation instructions, for all major items. Submit within 15 days after award of Contract.

### 1.03 SCHEDULING

A. Provide units, ready for occupancy by the Director's Representative and staff, within 30 days after shop drawings specified above are approved.

### 1.04 QUALITY ASSURANCE

A. Accessibility Requirements: Provide fully accessible units including stairs and ramps that comply with ICC/ANSI A117.1 as referenced by the Building Code of New York State.

B. Provide units and all related utility connections in accordance with the NYS Uniform Fire Prevention and Building Code.

C. Provide certification insignia from New York Department of State that certifies trailer unit is code compliant.

## PART 2 PRODUCTS

### 2.01 MOBILE OR RELOCATABLE OFFICE UNITS

A. Manufacturers/Companies:
   1. ModSpace, 1620 Route 9, Clifton Park, NY 12065 (518) 371-0384.
   2. ModSpace, 145 Canada Drive, East Syracuse, NY 13057, (315) 431-0001.

3. Williams Scotsman, 6 Industry Drive, Waterford, NY 12188, (518) 238-2411. Ext: 76212.
4. Anchor Modular Buildings, PO Box 100, Medford, NJ 08055, (866) 396-0227.

B. Number, Approximate Size and Model:
1. One, 48 x 10 feet, office unit by Modular Space Corporation.

C. Office Unit Requirements:
1. Ceiling Height: 8'-0" minimum.
2. Insulation: Exceed code required minimums for insulation. If wood frame construction, exceed the following values, walls > R - 11, floor > R -11 and roof > R - 19. Provide code requirements and provided insulation values.
3. Exterior Doors: Minimum 2, minimum 34 inches wide, with key-in-lever locksets (U-factor to exceed 0._).
4. Windows: Approximately 7 percent of exterior wall area with insect screens (U-factor to exceed 0._).
5. Complete ducted heating, ventilating, and air conditioning system with sufficient capacity to maintain a summer office temperature of 75 degrees F and a winter office temperature of 70 degrees F.
6. Water Heater: 6 gal minimum.
7. VCT or sheet vinyl floor finish.
8. Interior partitions to be wood 2 x 4 framing with ½" vinyl covered gypsum board. Provide minimum of two separate offices.
9. Fluorescent lights in all rooms as required to maintain a minimum of 60-foot candles at desktop level.
10. Bulletin board (4 feet x 6 feet).
11. Toilet room with toilet, grab bars, toilet tissue dispenser, lavatory, built-in medicine cabinet, paper towel dispenser and mirror.
12. Insulated skirting from bottom of units to grade, around entire unit. Skirting is to be 2' x 4' wood framing with 2" rigid insulation type SM and white ventilated vinyl siding to match unit.
13. Electric energy and fuel for the duration of the Contract.
14. Pre-wire unit for voice and data (10 connections each) as shown on approved shop drawings.

## 2.02 FURNITURE AND EQUIPMENT

A. Furniture:
1. Eight swivel type chairs with arms suitable for use at office desks.
2. Twenty straight back stackable chairs.
3. Eight lockable metal office desk, 30 x 60 inches, double pedestal type with keys.
4. Two drafting tables, 37 x 60 inches.
5. Two conference tables, 36 x 96 inches. Four folding tables, 30 x 60 inches.
6. One "Planhold" plan racks, adjustable height, floor supported cantilever type, with plan clamps or plan rack sticks.
7. Four lockable 4-drawer letter size file cabinets. Four lockable 4-drawer legal size file cabinets.

8. One 4’x 6’ wall mounted dry erase board.

B. Office Equipment:

1. One Panasonic Voicemail system installed, with programming and maintenance for the duration of the project to handle 5 outside lines and 10 compatible instruments. Provide the instruments and all wiring.
   a. System - Panasonic KX-TDA50 Digital Hybrid IP-PBX with wall rack.
   b. Voicemail System - Panasonic KX-TVA50.
   c. Telephones - Main 2 each KX-T7636.
   d. Telephone - Regular 8 ea. KX-T7625.
   e. Provide all wiring between all stations, equipment rack, etc. such that a complete system is installed and operates properly. Maintain the system for the life of the contract.
2. One refrigerated bottled water dispenser,(Hot & Cold Type) with cups, bottled water and necessary supplies. Provide water and cups for duration of contract.
3. One first aid kit.
4. One 15 cubic foot refrigerator, EnergyStar energy efficient model.
5. Fire Extinguisher: Multipurpose Dry-Chemical Type in Steel Container UL-rated 20-A:120-B:C, 20-lb nominal capacity, with monoammonium phosphate-based dry chemical in enameled-steel container.

## PART 3 EXECUTION

### 3.01 INSTALLATION

A. Install units where shown on drawings. Remove wheels and store them where directed.

B. Provide manufacturer’s stair with platform at one exterior door and ramp with platform(s) at one exterior entrance.

C. Provide parking area as shown on drawings.

D. Provide sanitary sewer lines including excavation and backfill from office units to existing sewer manhole.

E. Provide water service to office units from nearest available source. Retain and pay for a plumber to run the lines underground below frost line. Include excavation and backfill.

F. Provide electric service to units as indicated on drawings. Include 10’ above grade 4x4 mast for overhead connections. Retain and pay contractor to do the electrical service and connections.

### 3.02 MAINTENANCE AND CLEANING

A. Maintain and clean the office units for the duration of this Contract. Include the following:

1. Daily removal of rubbish & recyclables. Provide (10) waste paper baskets and (10) recycling baskets.
2. Daily cleaning of toilet room, including the plumbing fixtures. Replenish toilet room supplies as needed.
3. Weekly mopping of floors.
4. Weekly dusting of offices and other rooms.

B. Maintain approaches free of mud and snow.

C. Protect water lines from freezing.

## 3.03 REMOVALS

A. Remove the units, furniture, and equipment when directed by Director's Representative after closeout of all contracts. Restore permanent facilities used for or connected to the field office to their original condition or better including site.

**END OF SECTION**

JRC:jc

# SECTION 260505

# WIRING FOR GATE SYSTEMS

## PART 1 GENERAL

### 1.01 RELATED WORK SPECIFIED ELSEWHERE

A. Chain Link Fence: Section 323113.

### 1.02 SUBMITTALS

A. Waiver of Submittals: The "Waiver of Certain Submittal Requirements" in Section 013300 does not apply to this Section.

B. Submittals Package: Submit the product data and the shop drawings specified below all at the same time as a package.

C. Product Data: Catalog sheets, specifications, and installation instructions.

D. Shop Drawings: Show switches, controls, motors, and other electrical components. Include wiring diagrams of the complete system as proposed to be installed (standard diagrams will not be acceptable).

E. Contract Closeout Submittals:
   1. Operation and Maintenance Data: Deliver 2 copies, covering the installed products, to the Director's Representative. Include:
      a. Operation and maintenance data for each product.
      b. Complete point to point wiring diagrams of entire system as installed. Number all conductors and show all terminations. (Numbers shall correspond to numbered tags installed on each conductor.)

## PART 2 PRODUCTS

### 2.01 RACEWAYS, FITTINGS AND ACCESSORIES

A. Rigid Ferrous Metal Conduit: Steel, hot dipped galvanized on the outside and inside, UL categorized as Rigid Ferrous Metal Conduit (identified on UL Listing Mark as Rigid Metal Conduit - Steel or Rigid Steel Conduit), by Allied Tube & Conduit Corp., LTV Copperweld, or Wheatland Tube Co.

B. Flexible Metal Conduit: Galvanized steel strip shaped into interlocking convolutions, UL categorized as Flexible Metal Conduit (identified on UL Listing Mark as Flexible Steel Conduit or Flexible Steel Conduit Type RW), by AFC Cable Systems Inc., Anamet Electrical Inc., Electri-Flex Co., or International Metal Hose Co.

C. Liquid-tight Flexible Metal Conduit: UL categorized as liquid-tight flexible metal conduit (identified on UL Listing Mark as Liquid-Tight Flexible Metal Conduit, also specifically marked with temperature and environment application data), by AFC Cable Systems Inc., Anamet Electrical Inc., Electri-Flex Co., or Universal Metal Hose Co.

D. Insulated Bushings: Threaded, malleable iron/zinc electroplate with 105 degrees C (minimum) plastic insulated throat; Appleton Electric Co.'s BU50I Series, Cooper/Crouse-Hinds' 1031 Series, OZ/Gedney Co.'s IBC-50 Series, Raco Inc.'s 1132 Series, Steel City/T & B Corp.'s BI-901 Series, or Thomas & Betts Corp.'s 1222 Series.

E. Plastic Bushings for 1/2 and 3/4 Inch Conduit: 105 degrees C minimum temperature rating; Appleton Electric Co.'s BBU50, BBU75, Blackburn (T & B Corp.'s) 50 BB, 75 BB, Cooper/Crouse-Hinds' 931,932, or OZ/Gedney Co.'s IB-50, IB-75, Raco Inc.'s 1402, 1403, Steel City/T & B Corp.'s BU-501, BU-502, or Thomas & Betts Corp.'s 222, 223.

F. Connectors and Couplings:
1. Locknuts: UL, steel/zinc electroplate; Appleton Electric Co.'s BL-50 Series, Cooper/Crouse-Hinds' 11 Series, OZ/Gedney Co.'s 1-50S Series, Raco Inc.'s 1002 Series, Steel City/T&B Corp.'s LN-101 Series, or Thomas & Betts Corp.'s 141 Series.
2. Couplings (For Rigid Metal Conduit): Standard galvanized threaded couplings furnished by conduit manufacturer, or Allied Tube & Conduit Corp.'s Kwik-Couple.
3. Flexible Metal Conduit Connectors: Arlington Industries Inc.'s Saddle-Grip, OZ/Gedney Co.'s C-8T, 24-34T, ACV-50T Series, or Thomas & Betts Corp.'s Nylon Insulated Tite-Bite Series.
4. Liquid-tight Flexible Metal Conduit Connectors:
   a. Dry Locations: Steel, malleable iron, zinc electroplate, insulated throat; Appleton Electric Co.'s STB Series, Cooper/Crouse-Hinds' LTB Series, OZ/Gedney Co.'s 4Q-50T Series, Raco Inc.'s 3512 Series, Steel City/T & B Corp.'s LT-701 Series, or Thomas & Betts Corp.'s 5332 Series.
   b. Wet Locations: OZ/Gedney Co.'s 4Q-TG Series (hot-dip/mechanically galvanized), or Thomas & Betts Corp.'s 3322 Series (PVC coated).

G. Conduit Bodies (Threaded): Malleable iron or cast iron alloy bodies and covers with hot dipped galvanized or other specified corrosion resistant finish; Cooper/Crouse-Hinds' Condulets (Corro-free epoxy powder coat), or OZ/Gedney Co.'s Conduit Bodies (hot dipped galvanized). Stainless steel cover screws, covers gasketed to suit application.

H. Expansion Fittings: Cooper/Crouse-Hinds XJG (Corro-free epoxy powder coat), or OZ Gedney Co.'s AX, EXE (end type), hot dipped galvanized.

## 2.02 OUTLET, JUNCTION AND PULL BOXES

A. Galvanized Steel Boxes For Concealed Work: Standard type galvanized steel boxes and covers by Appleton Electric Co., Raco/Div. of Hubbell, or Steel City/T&B Corp.

B. Galvanized Steel Junction and Pull Boxes For Exposed Work: Code gage, galvanized steel screw cover boxes by Hoffman Enclosures Inc., Hubbell/Wiegmann, or Rittal/Electromate.

C. Threaded Type Boxes for Exposed Work:
   1. Outlet Boxes:
      a. For Dry, Damp Locations: Zinc electroplate malleable iron or cast iron alloy boxes by Appleton Electric Co., Cooper/Crouse-Hinds Co., or OZ/ Gedney Co., with zinc electroplate steel covers to suit application.
      b. For Wet Locations: Malleable iron or cast iron alloy boxes with hot dipped galvanized or other specified corrosion resistant finish as produced by Cooper/Crouse-Hinds (hot dipped galvanized or Corro-free epoxy powder coat), or OZ/Gedney Co. (hot dipped galvanized), with stainless steel cover screws, and malleable iron covers gasketed to suit application.
   2. Junction And Pull Boxes:
      a. For Dry, Damp Locations: Zinc electroplate cast iron boxes by Appleton Electric Co., Cooper/Crouse-Hinds, or OZ/Gedney Co., with zinc electroplate steel or cast iron cover.
      b. For Wet Locations: Cast iron boxes by Cooper/Crouse-Hinds' (hot dipped galvanized or Corro-free epoxy powder coat), or OZ/Gedney Co. (hot dipped galvanized), with stainless steel cover screws and cast iron cover gasketed to suit application.
   3. Conduit Bodies, Threaded (Provided with a Volume Marking):
      a. For Dry, Damp Location: Zinc electroplate malleable iron or cast iron alloy bodies with zinc electroplate steel covers; Appleton Electric Co.'s Unilets, Cooper/Crouse-Hinds' Condulets, or OZ/Gedney Co.'s Conduit Bodies.
      b. For Wet Locations: Malleable iron or cast iron alloy bodies with hot dipped galvanized or other specified corrosion resistant finish; Cooper/Crouse-Hinds' Condulets (hot dipped galvanized or Corro-free epoxy power coat), or OZ/Gedney Co.'s Conduit Bodies (hot dipped galvanized) with stainless steel cover screws and malleable iron covers gasketed to suit application.

D. Specific Purpose Outlet Boxes: As fabricated by equipment manufacturers for mounting their equipment thereon.

## 2.03 CONDUCTORS (600 VOLTS AND UNDER) AND ACCESSORIES

A. Date of Manufacture: No insulated conductor over one year old when delivered to the site will be acceptable.

B. Acceptable Companies: American Insulated Wire Corp., BICC General Cable Industries Inc., Cerro Wire & Cable Co. Inc., Pirelli Cable Corp., Rome Cable Corp., or Southwire Co.

C. Conductors: Annealed uncoated copper or annealed coated copper in conformance with the applicable standards for the type of insulation to be applied on the conductor.

D. Types:
   1. Power Wiring:
      a. General: Rated 600V, NEC Type FEP, RHH, RHW, RHW-2, THHN, THW, THW-2, THWN, THWN-2, XHH, XHHW, XHHW-2.
   2. Class 1 Wiring:
      a. No. 18 and No. 16 AWG: Insulated copper conductors suitable for 600 volts, N.E.C. types KF-2, KFF-2, PAFF, PF, PFF, PGF, PGFF, PTFF, RFH-2, RFHH-2, RFHH-3, SF-2, SFF-2, TF, TFF, TFN, TFFN, ZF, or ZFF.
      b. Larger than No. 16 AWG: Insulated copper conductors suitable for 600 volts, in compliance with N.E.C. Article 310.
      c. Conductor with other types and thickness of insulation may be used if listed for Class 1 circuit use.
   3. Class 2 Wiring:
      a. Multiconductor Cables: N.E.C. Types CL2P, CL2R, CL2.
      b. Other types of cables may be used in accordance with N.E.C. Table 725-61 “Cable Uses and Permitted Substitutions”, as approved.
   4. Class 3 Wiring:
      a. Single Conductors No. 18 and No. 16 AWG: Same as Class 1 No. 18 and No. 16 AWG conductors, except that:
         1) Conductors are also listed as CL3.
         2) Voltage rating not marked on cable except where cable has multiple listings and voltage marking is required for one or more of the listings.
      b. Multiconductor Cables: N.E.C. Types CL3P, CL3R, CL3.
      c. Other types of cables may be used in accordance with N.E.C. Table 725-61 “Cable Uses and Permitted Substitutions”, as approved.

E. Terminal Blocks and Connectors:
   1. Terminal Blocks: Barrier type double screw terminals rated 300 V minimum, meeting UL94 requirements for materials Classed 94V-0.
   2. Connectors: Plug and socket style, meeting UL94 requirements for materials classed 94V-0.

F. Terminals: Nylon insulated pressure terminal connectors by Amp/Tyco/Electronics, Electrical Products Div./3M, Framatome Connectors/Burndy, Ideal Industries Inc., Panduit Corp., Thomas & Betts Corp., or Wiremold Co.

G. Insulation Tapes:
   1. Plastic Tape: Electrical Products Div./3M's Scotch 88, Plymouth Rubber Co.'s Plymouth/Bishop Premium 85CW.
   2. Rubber Tape: Electrical Products Div./3M's Scotch 23, or Plymouth Rubber Co.'s Plymouth/Bishop W963 Plysafe.

H. Cable Clamps and Clips, Cable Ties, Spiral Wraps, etc.: Wire management products by Catamount/T&B Corp., or Ideal Industries Inc.

## 2.04 SUPPORTING DEVICES

A. Channel Support System:
   1. Channel Material: 12 gage steel.
   2. Finish: Hot dipped galvanized.
   3. Fittings: Same material and finish as channel.
   4. UL Listed Systems:
      a. B-Line Systems Inc.'s B-22 (1-5/8 x 1-5/8 inches), B-12 (1-5/8 x 2-7/16 inches), B-11 (1-5/8 x 3-1/4 inches).
      b. Kindorf/T&B Corp.'s B-900 (1-1/2 x 1-1/2 inches), B-901 (1-1/2 x 1-7/8 inches), B-902 (1-1/2 x 3 inches).
      c. Unistrut Corp.'s P-3000 (1-3/8 x 1-5/8 inches), P-5500 (1-5/8 x 2-7/16 inches), P-5000 (1-5/8 x 3-1/4 inches).
      d. Versabar Corp.'s VA-1 (1-5/8 x 1-5/8 inches), VA-3 (1-5/8 x 2-1/2 inches).

B. Fastening Fittings for Existing Masonry: Kindorf/T&B Corp.'s E-243, E-244, E-245, or E-170, or Versabar Corp.'s VX-4310, VX-2308, VX-4308, or VX-4309.

C. Pipe Straps: Two-hole steel conduit straps; Kindorf/T&B Corp.'s, C-144 Series.

D. Pipe Clamps: One-hole malleable iron clamps; Kindorf/T&B Corp.'s HS-400 Series, or OZ/Gedney Co.'s 14-50 Series.

## 2.05 MARKERS

A. Markers:
   1. Premarked, self-adhesive: by W.H. Brady Co., Ideal Industries, or Thomas and Betts Co.
   2. Flexible sleeve markers; Plastic Extruded Parts Inc.'s FS series.
   3. Snap-on markers; Plastic Extruded Parts Inc.'s RS series.

# PART 3 EXECUTION

## 3.01 INSTALLATION, GENERAL

A. Provide power wiring and raceway system to the control consoles/cabinets.

B. Provide power and control wiring and raceway system from the control consoles/cabinets to the operating devices and appurtenances.

## 3.02 RACEWAYS INSTALLATION

A. Raceway Types and Locations:
   1. Conduit: Run conduit concealed or exposed as indicated on drawings:
      a. Install rigid ferrous metal conduit in all locations unless otherwise specified.
      b. Flexible Metal Conduit:
         1) Use for short runs to equipment such as interlocks, limit switches or other items requiring adjustments (dry locations).
         2) Use 1 to 2 feet of flexible metal conduit for final connection to equipment subject to vibration (dry locations).
      c. Liquid-tight Flexible Metal Conduit:
         1) Use for short runs to equipment such as interlocks, limit switches or other items requiring adjustment (damp and wet locations).
         2) Use 1 to 2 foot of liquid-tight flexible metal conduit for final conduit connection to equipment subject to vibration (damp and wet locations).
   2. Gate System Equipment Construction as Raceway: Track boxes, steel structural tubing, or steel plates may be utilized as raceways where designed expressly for the purpose by the gate system equipment manufacturer.

B. Conduit Ends:
   1. Use 2 locknuts and insulated bushing on end of each conduit entering console/cabinet or galvanized steel box (plastic bushing may be used on 1/2 inch & 3/4 inch conduit).
   2. Use insulated grounding bushings on the ends of conduits, which are not directly connected to the enclosure (such as stub-ups under equipment, etc.) and bond between bushings and enclosure with equipment grounding conductor.

C. Expansion Joints: Use expansion joint fittings where conduits cross expansion joints.

## 3.03 OUTLET, JUNCTION AND PULLBOX INSTALLATION

A. Boxes For Concealed Conduit System:
   1. Install boxes of depth to suit job conditions and also comply with Article 370 of the National Electrical Code.
   2. Use galvanized steel boxes with flush covers for junction and pull boxes.

B. Boxes For Exposed Conduit System:
   1. Use threaded type boxes for all Work with conduit sizes 1/2, 3/4 and 1 inch.
   2. Use threaded type boxes for all Work with conduit sizes over 1 inch in wet locations.
   3. Use galvanized steel junction and pull boxes for Work with conduit sizes over 1 inch in dry locations and damp locations.

C. Specific Purpose Outlet Boxes: Use specific purpose outlet boxes to mount equipment when available and suitable for job conditions.

## 3.04 CONDUCTOR INSTALLATION

A. Install wiring in raceways.

B. Wiring shall be continuous (no splices) except for plug-in connectors or terminal blocks for connections to motors, limit switches, and other electrical components to facilitate removal and replacement of these items.

C. Protect wiring in track boxes with wire trough or chase. Encase wiring in plastic sheathing or rubber grommets when passing through metal components and near moving parts.

## 3.05 SUPPORTING DEVICE INSTALLATION

A. Attachment of Conduit System:
   1. Masonry Construction: Attach conduit to masonry construction by means of pipe straps or pipe clamps and masonry anchorage devices.
   2. Channel Support System: Attach conduit to channel as indicated on drawings.

## 3.06 IDENTIFICATION, LABELING AND MARKING

A. Identify conductors with markers at terminal strips, cabinets, consoles and pullboxes (designations shall correspond with point to point wiring diagrams).

**END OF SECTION**

Rjf

# SECTION 323113

# CHAIN LINK FENCE AND GATES

## PART 1 GENERAL

### 1.01 RELATED WORK SPECIFIED ELSEWHERE

A. Wiring for Gate Systems: Section 260505.

### 1.02 REFERENCES

A. Comply with ASTM A 53 for requirements of Schedule 40 piping.

B. Welding Standards: "Structural Welding Code - Steel, AWS D1.1" or "Structural Welding Code - Sheet Steel, AWS D1.3", as applicable, by the American Welding Society (AWS Codes).

C. Materials and Finishes Standard: ANSI/BHMA A156.18-2000, "American National Standard for Materials and Finishes".

D. Electrical Components for Locking Devices and Electric Locks Standard: National Electric Code.

### 1.03 DEFINITIONS

A. Height of Fence: Distance measured from the top of concrete footing to the top of fabric. Fences with buried fabric measured from finished grade to the top of fabric.

B. Company Field Advisor: An employee of the company which markets the security coils under their name and who is certified in writing by the Company to be technically qualified in design and installation of security coils or an employee of an organization certified by the foregoing company to be technically qualified in design and installation of security coils.

### 1.04 SUBMITTALS

A. Shop Drawings: Complete detailed drawings for each height and style of fence and gate required. Include separate schedule for each listing all materials required and technical data such as size, weight, and finish, to ensure conformance to specifications.

B. Product Data: Manufacturer's catalog cuts, specifications, and installation instructions for each item specified.

C. Samples:
   1. Fence Fabric: Minimum one square foot.

2. Fence and Gate Posts: Two each, one foot long, if requested.
3. Miscellaneous Materials and Accessories: One each, if requested.

D. Quality Control Submittals:
1. Test Reports: Security coils test procedure report.
2. Certificates: Affidavit required under Quality Assurance Article.

## 1.05 QUALITY ASSURANCE

A. Comply with standards of the Chain Link Fence Manufacturer's Institute.

B. Provide steel fence and related gates as a complete compatible system including necessary erection accessories, fittings, and fastenings.

C. Posts and rails shall be continuous without splices.

D. List of Completed Installations: If brand names other than those specified are proposed for use, furnish the name, addresses, telephone number, and facility contact of a minimum of 5 comparable installations which can prove the proposed products have operated satisfactorily for a minimum of 2 years.

E. Manufacturer's Qualifications: The manufacturer of gates and detention type hardware shall be regularly engaged in the production of such products, shall have furnished such products for 5 similar projects that have been in operation which can prove the proposed products have operated satisfactorily for a minimum of 2 years, and shall be subject to the approval of the Director.

F. Installation Company Qualifications: The Company installing the Work of this section, and the person supervising the Work, shall be experienced in gate system work, and shall have been engaged in the assembly and installation of the specified gates etc. for a minimum of three years.

G. Warranty: Manufacturer of gate system shall warranty all components furnished as part of the gate system.

H. Technical Advisor: In addition to reviewing and approving the Gate Systems Submittals Package, the Technical Advisor (for each type of gate system) shall provide the following on-site services:
1. Render advice regarding installation and final adjustment of the gate system(s).
2. Witness final system test and then certify with an affidavit that the gate system(s) is installed in accordance with the contract documents and is operating properly.
3. Train facility personnel on the operation and maintenance of the gate system(s) a minimum of 2 one-hour sessions.
4. Answer questions which might arise.

I. Galvanizing Stamp: Stamp galvanized items with name of the galvanizer, weight of coating, and applicable ASTM number.

## 1.06 DELIVERY

A. Coordinate delivery of anchors and other accessories to be built into other Work, to avoid delay. Furnish instructions and templates as required for accurate location.

B. The manufacturer of the prison lock keys shall notify the Director's Representative Steven Kass (315) 736-5770 a minimum of two days in advance of shipping keys. Ship all prison lock keys direct from manufacturer, through the United States Postal Service, via Registered Mail, Restricted Delivery, Return Receipt Requested, to:

Jim Rivenburg
5900 Airport Road
Oriskany, NY 13424

## 1.07 MAINTENANCE

A. Spare Parts: Furnish the following and store at the site where directed:
1. Sliding Gate
   a. One motor.
   b. One reduction gear assembly.
   c. One full-length chain and repair links.
   d. Two of each type limit switch and part kit.
   e. One each reversing contact 24V.
   f. One each transformer 75Va-24V.

B. Maintenance Materials:
1. Hand Tool Maintenance Kit(s): Lockable steel tool box each containing one set of all hand tools and fasteners necessary to perform preventative maintenance and repairs of gates and locking system devices. This list includes but is not limited to the following:
   a. Mechanics mirror.
   b. LED Flashlight.
   c. One complete Torx kit and driver.
2. Required amounts of recommended lubricants for 3 years service.
3. Test Unit that tests and operates the Folger Adam 50 Series or Southern Steel 1050 Series Electric Lock for proper functions.

# PART 2 PRODUCTS

## 2.01 COMPANIES

A. American Jail Products, LLC, 4 Van Buren St., Troy, NY 12180, (518) 271-6560.

B. Hearne Steel Company, Inc. P.O. Box 1239 Hearne Texas 77859, www.hearnesteel.com.

C. R. R. Brink Locking Systems, Inc., 500 Earl Road, Shorewood, IL 60431, (815) 744-7000, www.rrbrink.com

D. Maximum Security Products Corporation, 3 Schoolhouse Lane, Waterford, NY 12188, (518) 233-1800, www.maximumsecuritycorp.com.

E. Southern Folger Detention Equipment Company, 4634 South Presa St., San Antonio, TX 78223, (210) 533-1231, www.southernfolger.com.

F. Textron Fastening Systems, 1-800-544-6117, www.camcar.textron.com/torxplus

G. Tymetal Corporation, Inc., 1626 Rt. 9, Clifton Park, NY 12065, (518) 383-6084, www.tymetal.com.

## 2.02 MATERIALS

A. Class B Steel Tubing (Option):
1. SS-40 Fence Pipe by Allied Tube & Conduit Corp., 16100 S. Lathrop Ave., Harvey, IL, 60426, (800) 882-5543.
2. Tuf-40 Fence Framework by American Tube and Pipe Co., Inc., 2525 N. 27th Ave., Phoenix, AZ 85009, (800) 669-8823.

## 2.03 STEEL FRAMEWORK (FOR FENCES 6’-1” - 10’-0” HIGH)

A. End Posts, Corner Posts and Pull Posts:
1. Pipe: 2.875 inches OD, 5.79 pounds per linear foot (Schedule 40).
2. Square Tubing: 2.50 inches OD, 5.70 pounds per linear foot.
3. Class B Steel Tubing: 2.875 inches OD, 4.64 pounds per linear foot.
4. Roll Formed C-Section: ASTM A 570 Grade 45, 3.5 inches by 3.5 inches by 0.128 inch thick, with minimum bending strength of 486 pounds under a 6 foot cantilever load.

B. Line Posts:
1. Pipe: 2.375 inches OD, 3.65 pounds per linear foot (Schedule 40).
2. Class B Steel Tubing: 2.375 inches OD, 3.11 pounds per linear foot.
3. H-section: 2.25 inches by 1.95 inches by 0.143 inches, 4.10 pounds per linear foot.
4. Roll Formed C-Section: ASTM A 570 Grade 45, 2.25 inches by 1.70 inches by 0.121 inch thick, with minimum bending strength of 316 pounds under a 6 foot cantilever load.

## 2.04 STEEL FABRIC

A. One-piece widths for fence heights up to 12’-0”.

B. Chain link, 2 inch mesh, No. 9 gauge.

C. Selvages: Top edge twisted and barbed; bottom edge knuckled.

## 2.05 SWING GATE POSTS

A. Single width of gate up to 6'-0" wide and less than 10'-0" high:
   1. Pipe: 2.875 inches OD, 5.79 pounds per linear foot (Schedule 40).
   2. Square Tubing: 2.50 inches OD, 5.70 pounds per linear foot.
   3. Class B Steel Tubing: 2.875 inches OD, 4.64 pounds per linear foot.
   4. Roll Formed C-Section: ASTM A 570 Grade 45, 3.5 inches 3.5 inches by 0.128 inch thick, with minimum bending strength of 486 pounds under a 6 foot cantilever load.

## 2.06 SWING GATE (Type B)

A. Gate frame:
   1. Pipe: 1.90 inches OD, 2.72 pounds per linear foot (Schedule 40).
   2. Class B Steel Tubing: 1.90 inches OD, 2.28 pounds per linear foot.
   3. Square Tubing: 2 inches OD, 2.60 pounds per linear foot.

B. Hardware:
   1. Hinges: Pressed Steel 180 degree gate hinge item no. 014005 or appropriate for use by Hearne Steel Company, Inc.
   2. Prison Deadlock: 1 - Folger Adam No.86 or Southern Steel No.1080A-2 or R.R. Brink No. 7086.
      a. Coordinate with Electrical Contract for coordination of lock sets.
   3. Cylinder Shields: 2 - Folger Adam No. 2CS or Southern Steel No. 219 or R.R.Brink No. CS x US32D.

C. Fabrication and manufacture:
   1. Gate frames: Assemble gate frames by welding. Install horizontal rails, and frame around lock box as indicated.
   2. Lock box: Fabricate lock box with channels, plates, angles and bars as shown. Provide removable cover plate held in place with TORX center pin security machine screws. Locate removable cover plate on side of gate opposite the threat side. If removable cover plate must be installed on threat side, secure plate with Torx PLUS center pin security machine screws. Galvanize the entire assembly.
   3. Fabric: Secure fabric to gate frame with stretcher bars and wire ties. Modify fabric as required around lock box, and secure ends of fabric within lock box as detailed. Do not weld fabric to gate frame.

## 2.07 FASTENERS

A. Bolts and Nuts: ASTM A 307, Grade A.
   1. Concealed Bolts: Standard common bolts with lock washers and nuts. For items requiring servicing or replacement, drill the bolts and equip them with cotter pins and flat washers.
   2. Exposed Bolts: Countersunk flathead security head Torx center pin bolts, with lock washers and nuts, unless otherwise specified.

B. Machine Screws: ANSI/ASME B18.6.3.
   1. Concealed Machine Screws: Security head Torx center pin screws, unless otherwise specified.
   2. Exposed Machine Screws: Countersunk flat head security head Torx center pin screws, unless otherwise specified.

C. Carriage Bolts:
   1. Exposed Bolts: Carriage bolts, with lock nuts and washers. (When mounting control console to counter top, install carriage bolt from the underside of counter top into the control console.)
   2. Plain Washers: Round, ASME B18.22.1.
   3. Lock Washers: Helical, spring type, ASME B18.21.1.

## 2.08 SLIDING GATE FRAMEWORK

A. Posts
   1. Pipe: 4 inches OD, 9.11 pounds per linear foot (Schedule 40).
   2. Class B Steel Tubing: 4 inches OD, 6.56 pounds per linear foot.

B. Frames:
   1. Pipe 1.90 inches OD, 2.72 pounds per linear foot (Schedule 40).
   2. Class B Steel Tubing: 1.90 inches OD, 2.28 pounds per linear foot.

## 2.09 SLIDING GATE HARDWARE

A. Cantilever type with enclosed tracks and integral latch assembly:
   1. Ty-Metal Corp., 1626 Route 9, Clifton Park, NY 12065, (800) 328-4283.
   2. Anchor Fence, 6500 Eastern Ave., Baltimore, MD, (410) 633-6500.
   3. Lock: Manual operation 806ER, by Folger Adam Co., 16300 West 103rd St., Lemont, IL 60439-9653, (708) 739-3900, keyed both sides, with 2SC cylinder shields as required. Key individually with 7 keys.

## 2.10 IDENTIFICATION PLATES

A. Gate Identification: Provide at each gate a stainless steel identification plate(s), sized 2” x 4”, with individual gate numbers (G-1, G-12, etc.) laser cut from the plate stock. Height of letters/numbers shall be 1”min. Prior to applying plates, paint the area immediately behind the plate with black paint to provide contrast between the plate and incised numbers/letters. Attach plate with 4 Torx screws. Unless shown or directed otherwise, locate plates as follows:
   1. Sliding Gates: Attach to the cover of the motor cabinet or emergency release column.
   3. Type “B” Gates: Attach to the face of the lock-mounting box, on the compound side of the gate.

B. Sliding Gate Operator Motor Housing Cabinet: Inside the motor housing cabinet of each sliding gate operator system provide a warning label, 3” x 6” minimum in size, red with white lettering, engraved with the following inscription:

"WARNING
(PRIOR TO SERVICING)
DISCONNECT BOTH THE
MOTOR OPERATOR CIRCUIT
AND THE GEARBOX HEATER
CIRCUIT"

1. Phenolic: Two color laminated engravers stock, 1/16 inch minimum thickness, machine engraved to expose inner core color (white).
2. Precision engrave letters and numbers with uniform margins, character size minimum 3/16 inch high.

## 2.11 MISCELLANEOUS MATERIALS AND ACCESSORIES

A. Rails and Post Braces:
1. Pipe: 1.660 inches OD, 2.27 pounds per linear foot (Schedule 40).
2. Class B Steel Tubing: 1.660 inches OD, 1.84 pounds per linear foot.
3. Roll formed C-Section: 1.625 inches by 1.25 inches by 0.0747 inch thick with minimum bending strength of 192 pounds on a 10 foot span.

B. Fittings and Post Tops: Steel, wrought iron, or malleable iron.
1. Fasteners: Tamper-resistant cadmium plated steel screws.

C. Stretcher Bars: One piece equal to full height of fabric, minimum cross-section 3/16 inch by 3/4 inch.

D. Metal Bands (for securing stretcher bars): Steel, wrought iron, or malleable iron.

E. Wire Ties: Conform to American Steel Wire gauges.
1. For tying fabric to line posts, rails and braces: 9 gauge (.1483 inch) steel wire.
2. For tying tension wire to fabric: 11 gauge (.1205 inch) steel hog rings.

F. Truss Rods: 3/8 inch diameter.

G. Concrete: Portland Cement concrete having a minimum compressive strength of 2500 psi at 28 days.

H. Spiral Paper Tubes:
1. Sonotube by Sonoco Products Co., North Second St., Hartsville, SC 29550, (800) 377-2692.
2. Sleek/tubes by Jefferson Smurfit Corp., P.O. Box 66820, St. Louis, Mo 63166, (314) 746-1100.

I. Cold Galvanizing Compound: Single component compound giving 93 percent pure zinc in the dried film, and meeting the requirements of DOD-P-21035A (NAVY).

J. Tension Wire: 7 gauge coiled spring steel wire.

## 2.12 BARBED WIRE

A. Two strand 12-1/2 gauge steel wire, with 14 gauge 4-point steel barbs spaced 5 inches oc.

B. Extension Arms: Pressed steel, wrought iron, or malleable iron, complete with provision for anchorage to posts (including light posts) and attaching 3 rows of barbed wire to each arm.
   1. Type: Single 45 degree arm; one for each post.
   2. Type: Single vertical arm; one for each post.

## 2.13 FINISHES

A. Steel Framework:
   1. Pipe: Galvanized in accordance with ASTM A 53, 1.8 ounces zinc per square foot.
   2. Square Tubing: Galvanized in accordance with ASTM A 123, 2.0 ounces zinc per square foot.
   3. Class B Steel Tubing: Exterior; 1.0 ounces zinc per square foot plus chromate conversion coating and clear polyurethane. Interior; zinc rich organic coating.
   4. H-Section: Galvanized in accordance with ASTM A 123, 2.0 ounces zinc per square foot.
   5. Roll Formed C-Section: Galvanized in accordance with ASTM A 123, 2.0 ounces zinc per square foot.

B. Fabric; one of the following:
   1. Galvanized Finish: ASTM A 392 class II zinc coated after weaving, with 2.0 ounces per square foot.
   2. Aluminized Finish: ASTM A 491 aluminum coated with 0.40 ounces per square foot.

C. Fence and Gate Hardware, Miscellaneous Materials, Accessories:
   1. Wire Ties: Galvanized Finish, ASTM A 90 1.6 ounces zinc per square foot, or aluminized finish, ASTM A 809 0.40 ounces per square foot.
   2. Hardware and Miscellaneous Items: Galvanized Finish, ASTM A 153 (Table 1).
   3. Extension Arms: Hot-dip galvanized after fabrication, ASTM 123, 2.0 ounces zinc per square foot.
   4. Angle Beams, I Beams, and Steel Shapes: Galvanized in accordance with ASTM A 123, 2.0 ounces zinc per square foot.

D. Barbed Wire and Tension Wire; one of the following:
   1. Galvanized Finish: ASTM A 121 class 3, 0.80 ounces per square foot.
   2. Aluminized Finish: ASTM A 585 class 2, 0.30 ounces per square foot.

## PART 3 EXECUTION

### 3.01 PREPARATION

A. Clear and grub along fence line as required to eliminate growth interfering with alignment. Remove debris from State property.

B. Do not begin installation of fence in areas to be cut until finished grading has been completed.

### 3.02 INSTALLATION

A. Space posts equidistant in the fence line with a maximum of 10 feet on center.

B. Setting Posts in Earth: Drill holes for post footings. If existing grade at the time of installation is below finished grade, provide spiral paper tubes to contain concrete to finish grade elevation. Set posts in center of hole and fill hole with concrete. Plumb and align posts. Vibrate or tamp concrete for consolidation. Finish concrete in a dome shape above finish grade elevation to shed water. Do not attach fabric to posts until concrete has cured a minimum of 7 days.

C. Locate corner posts at corners and at changes in direction. Use pull posts at all abrupt changes in grade and at intervals no greater than 500 feet. On runs over 500 feet, space pull posts evenly between corner or end posts. On long curves, space pull posts so that the strain of the fence will not bend the line posts.

D. Install top rail continuously through post tops or extension arms, bending to radius for curved runs. Install expansion couplings as recommended by fencing manufacturers.

E. Install rails in one piece between posts and flush with post on fabric side using special offset fittings where necessary.

F. Brace corner posts, pull posts, end posts, and gate posts to adjacent line posts with horizontal rails.

G. Diagonally brace corner posts, pull posts, end posts, and gate posts to adjacent line posts with truss rods and turnbuckles.

H. Attach fabric to security side of fence. Maintain a 2 inch clearance above finished grade except when indicated otherwise. Thread stretcher bars through fabric using one bar for each gate and end post and 2 for each corner and pull post. Pull fabric tight so that the maximum deflection of fabric is 2 inches when a 30 pound pull is exerted perpendicular to the center of a panel. Maintain tension by securing stretcher bars to posts with metal bands spaced 15 inches oc. Fasten fabric to steel framework with wire ties spaced 12 inches oc for line posts and 24 inches oc for rails and braces. Bend back wire ends to prevent injury. Tighten stretcher bar bands, wire ties, and other fasteners securely.

I. Position bolts for securing metal bands and hardware so nuts are located opposite the fabric side of fence. Tighten nuts and cut off excess threads so no more than 1/8 inch is exposed. Peen ends to prevent loosening or removal of nuts.
   1. Secure post tops and extension arms with tamper-resistant screws.

J. Install the Gates in accordance with the Company's printed instructions and approved shop drawings.

K. Comply with requirements of FABRICATION AND MANUFACTURE Article. Touch-up abraded areas as required, with compatible primer and finish paint, or cold galvanizing compound.

L. Use only rotary power drills where masonry or concrete is required to be drilled. Drill holes to exact size required.

M. Perform welding in accordance with the AWS Codes.
   1. Hinges: Attach ground so welding current will not be carried through the hinge barrel.

N. Tension Wire: Support bottom edge of fabric with tension wire. Weave tension wire through fabric or fasten with hog rings spaced 24 inches oc. Tie tension wire to posts with 9 gauge wire ties.

O. Wire brush and repair welded and abraded areas of galvanized surfaces with one coat of cold galvanizing compound.

P. Restore disturbed ground areas to original condition. Topsoil and seed to match adjacent areas.

**END OF SECTION**

dm

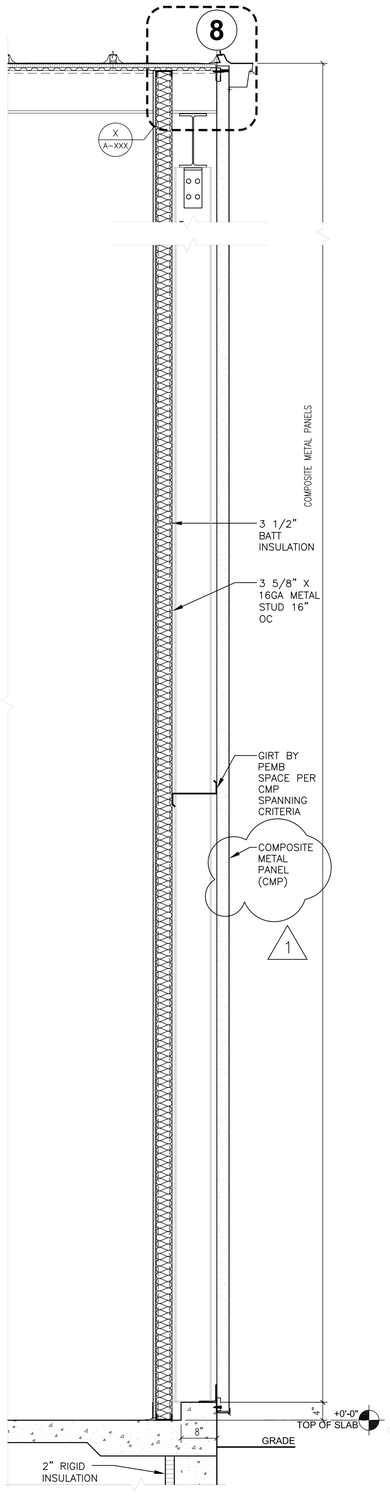


1 WALL SECTION – EAST WALL
A-305 3/4" = 1'-0"

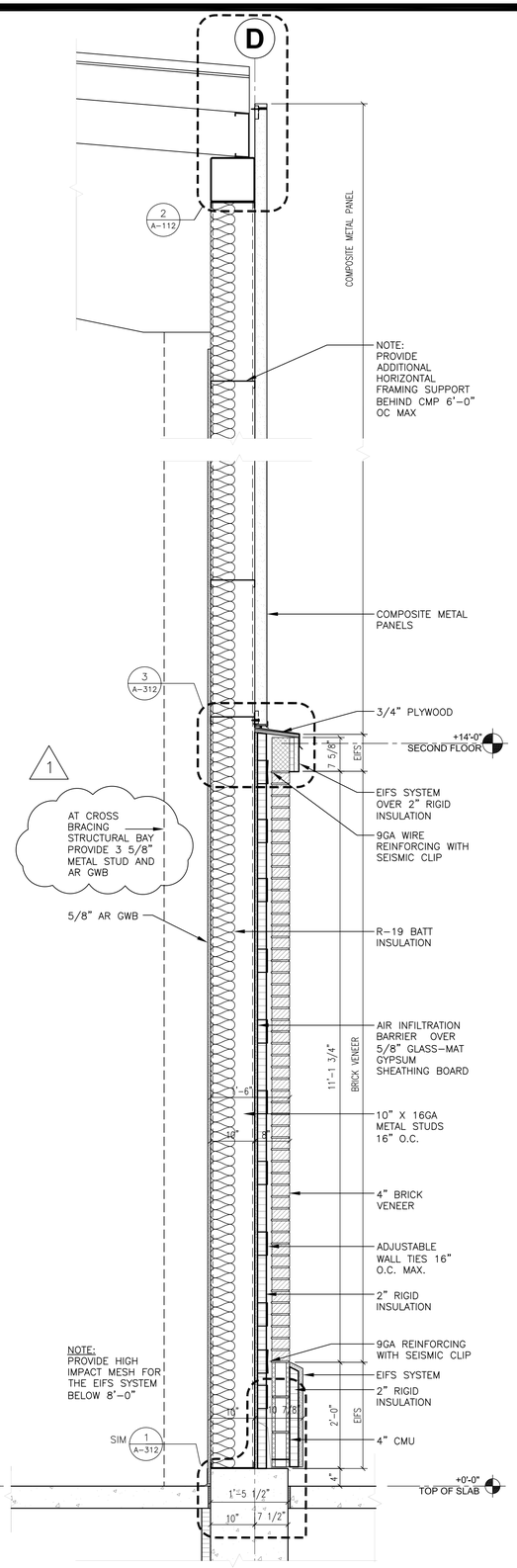


2 WALL SECTION – ROSTERFIELD NATIONAL BANK
A-305 3/4" = 1'-0"

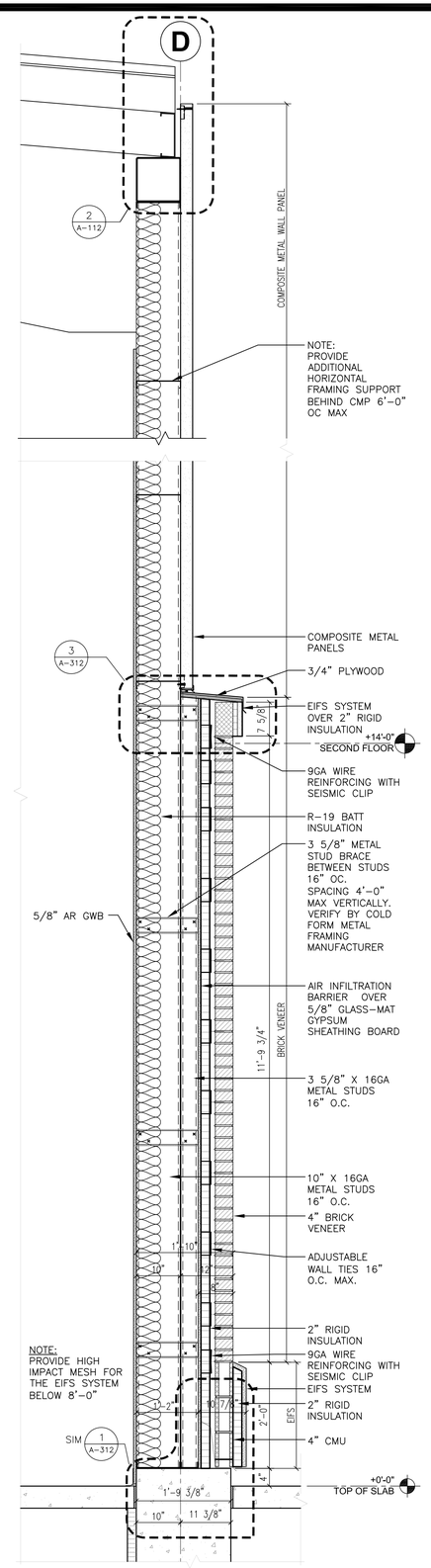


3 WALL SECTION – ROSTERFIELD NATIONAL BANK
A-305 3/4" = 1'-0"

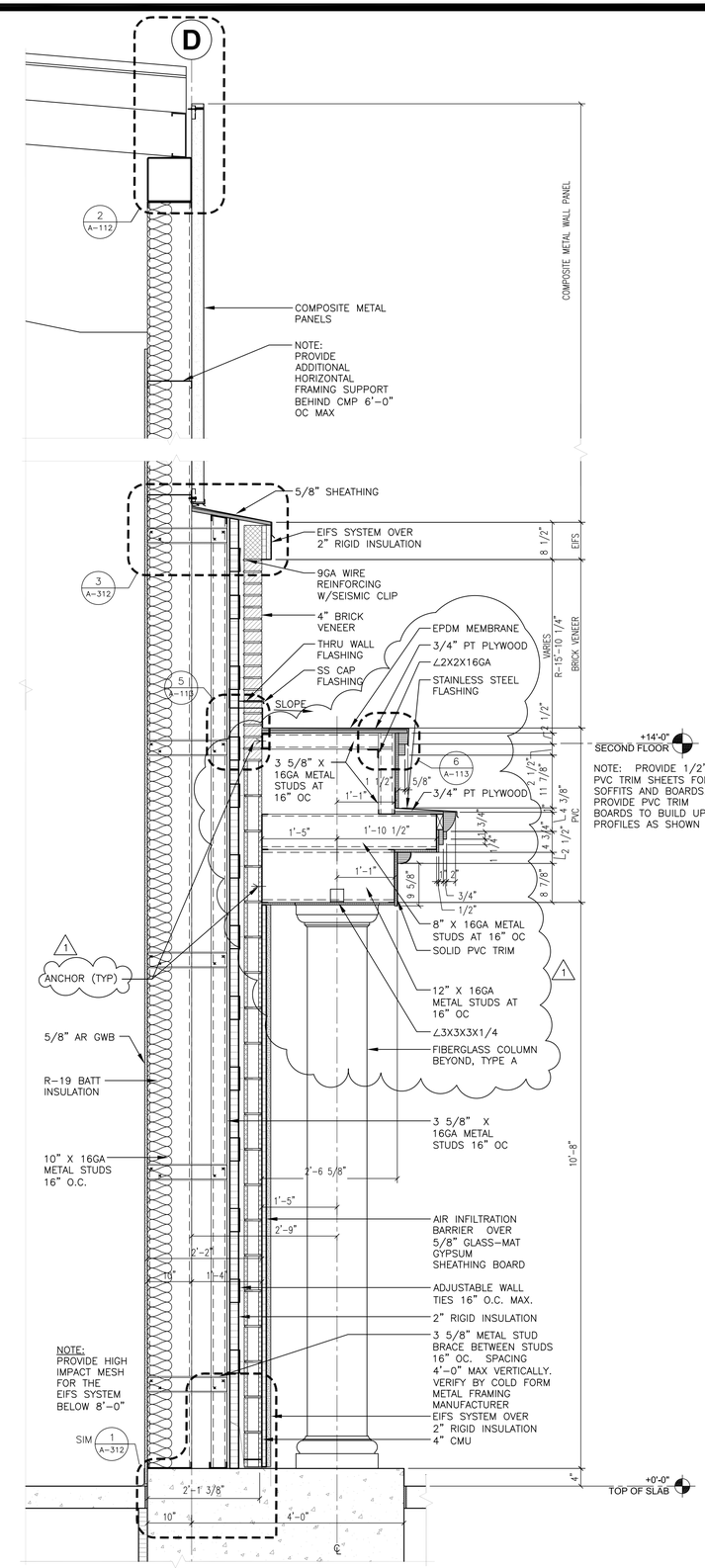


4 WALL SECTION – ROSTERFIELD NATIONAL BANK
A-305 3/4" = 1'-0"

Aug 30,2012 – 10:25am
V:\Designwbconstr\0440xx\44014\Cadarch\A-305.dwg
36x24 PLOT SHEET

NYS OFFICE OF GENERAL SERVICES
*Serving New York*

ANDREW M. CUOMO
Governor
ROANN M. DESTITO
COMMISSIONER
JAMES M. DAVIES, A.I.A.
Deputy Commissioner, Design and Construction

**WARNING:**
THE ALTERATION OF THIS MATERIAL IN ANY WAY, UNLESS DONE UNDER THE DIRECTION OF A COMPARABLE PROFESSIONAL, I.E. ARCHITECT FOR AN ARCHITECT, ENGINEER FOR AN ENGINEER OR LANDSCAPE ARCHITECT FOR A LANDSCAPE ARCHITECT, IS A VIOLATION OF THE NEW YORK STATE EDUCATION LAW AND/OR REGULATIONS AND IS A CLASS 'A' MISDEMEANOR.

REGISTERED ARCHITECT
JOHN ROBERT HUTTON
025156
STATE OF NEW YORK

CONTRACT:
CONSTRUCTION

TITLE:
PROVIDE CITYSCAPE COMPLEX

LOCATION:
STATE PREPAREDNESS TRAINING CENTER
5900 AIRPORT ROAD
ORISKANY, NY 13424

CLIENT:
DIVISION OF HOMELAND SECURITY & EMERGENCY SERVICES

REVISED DRAWING
08/29/2012

| MARK | DATE | DESCRIPTION |
|---|---|---|
| 1 | 08/29/2012 | ADDENDUM NO 3 |
| | 07/05/2012 | FINAL SUBMISSION |

| | |
|---|---|
| PROJECT NUMBER: | 44014– C |
| DESIGNED BY: | XXXXX |
| DRAWN BY: | XXXXX |
| FIELD CHECK: | XXXXX |
| APPROVED: | XXXXX |

SHEET TITLE:
WALL SECTIONS

DRAWING NUMBER:
A–305

SHEET X OF X

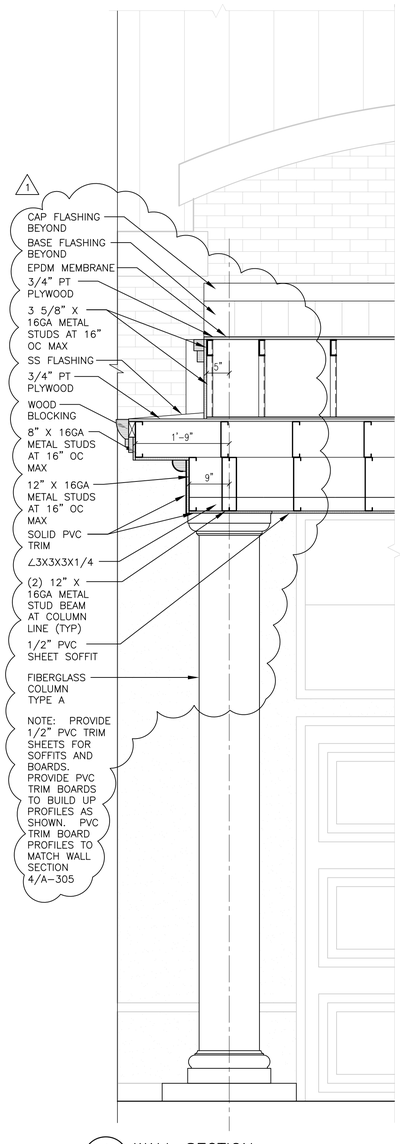


1 A-308 WALL SECTION 3/4" = 1'-0"

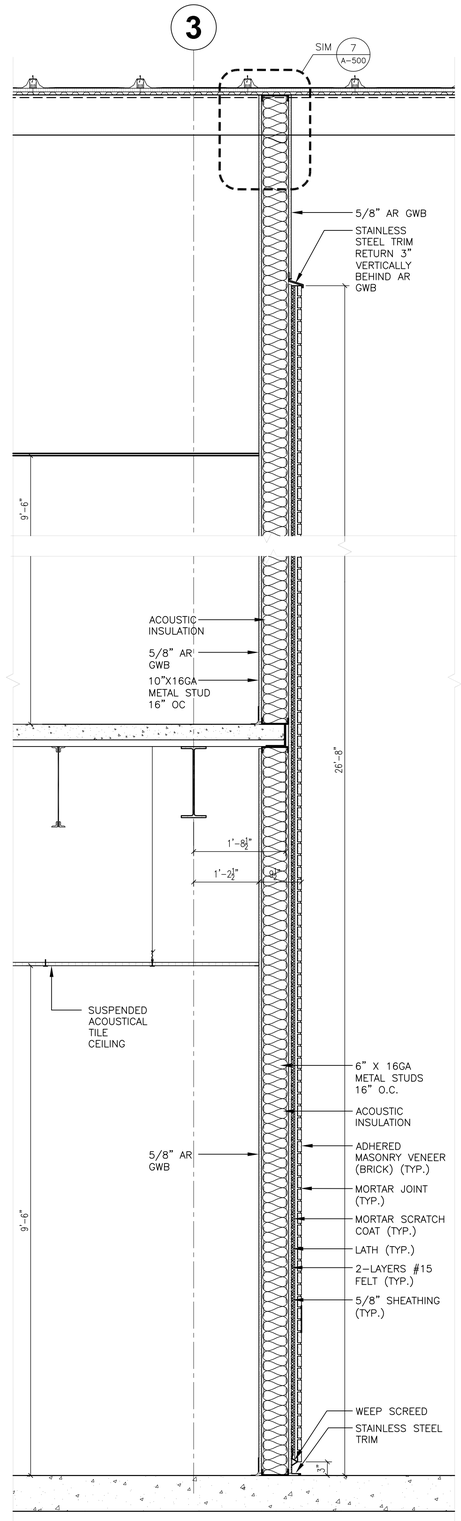


2 A-308 WALL SECTION – AT LANDMARK ENERGY 3/4" = 1'-0"

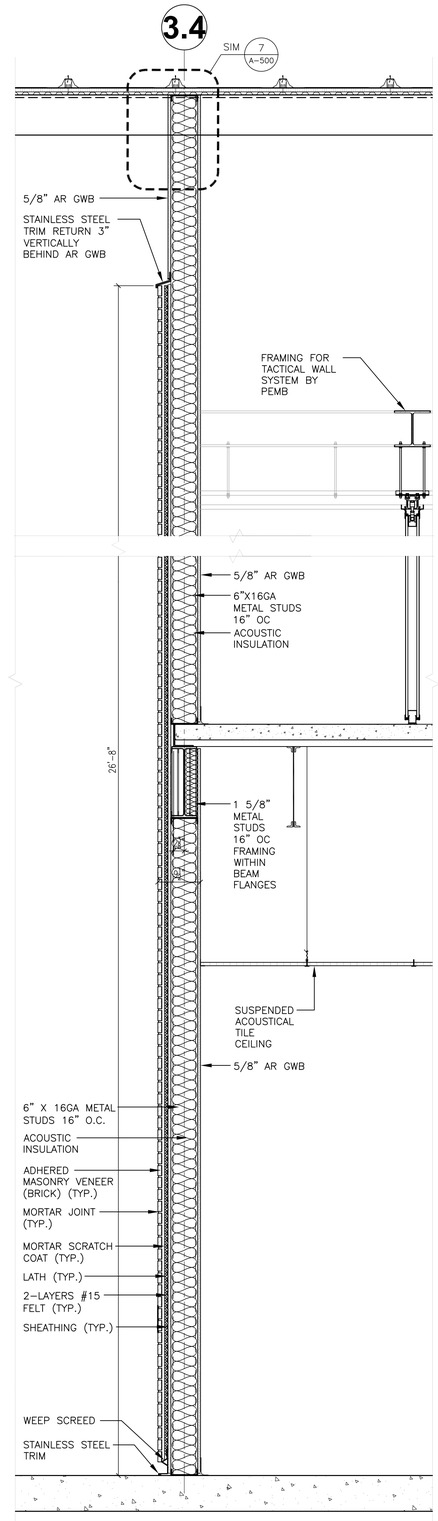


3 A-308 WALL SECTION – AT FLEX SPACE 3/4" = 1'-0"

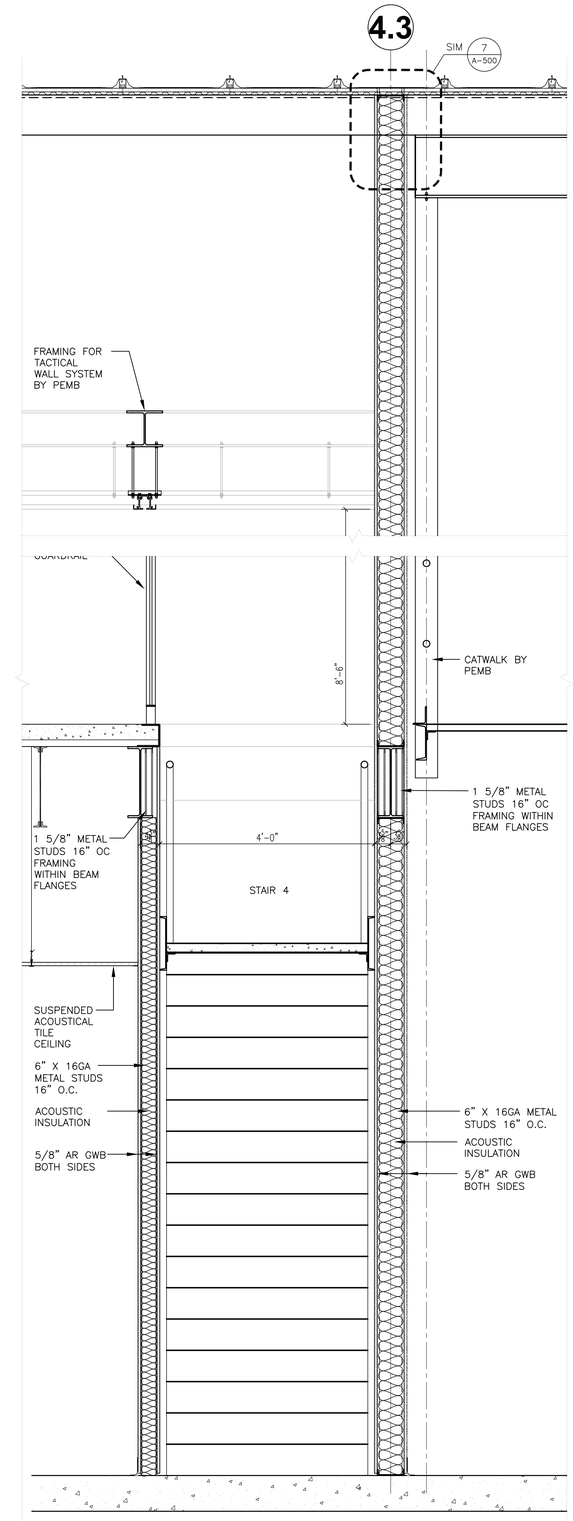


4 A-308 WALL SECTION – AT FLEX SPACE 3/4" = 1'-0"

NYS OFFICE OF GENERAL SERVICES

*Serving New York*

ANDREW M. CUOMO
Governor
ROANN M. DESTITO
COMMISSIONER
JAMES M. DAVIES, A.I.A.
Deputy Commissioner, Design and Construction

WARNING:

THE ALTERATION OF THIS MATERIAL IN ANY WAY, UNLESS DONE UNDER THE DIRECTION OF A COMPARABLE PROFESSIONAL, I.E. ARCHITECT FOR AN ARCHITECT, ENGINEER FOR AN ENGINEER OR LANDSCAPE ARCHITECT FOR A LANDSCAPE ARCHITECT, IS A VIOLATION OF THE NEW YORK STATE EDUCATION LAW AND/OR REGULATIONS AND IS A CLASS 'A' MISDEMEANOR.

REGISTERED ARCHITECT JOHN ROBERT HUTTON 023156 STATE OF NEW YORK

CONTRACT:
CONSTRUCTION

TITLE:
PROVIDE CITYSCAPE COMPLEX

LOCATION:
STATE PREPAREDNESS TRAINING CENTER
5900 AIRPORT ROAD
ORISKANY, NY 13424

CLIENT:
DIVISION OF HOMELAND SECURITY & EMERGENCY SERVICES

REVISED DRAWING
08/29/2012

| MARK | DATE | DESCRIPTION |
|---|---|---|
| 1 | 08/29/2012 | ADDENDUM NO 3 |
| | 07/05/2012 | FINAL SUBMISSION |

| | |
|---|---|
| PROJECT NUMBER: | 44014– C |
| DESIGNED BY: | XXXXX |
| DRAWN BY: | XXXXX |
| FIELD CHECK: | XXXXX |
| APPROVED: | XXXXX |

SHEET TITLE:
WALL SECTIONS

DRAWING NUMBER:
A–308

SHEET X OF X

Aug 30,2012 – 10:28am
V:\Designed\Const\Q44Box\44014\CadArch\A-308.dwg
36x24 PLOT SHEET

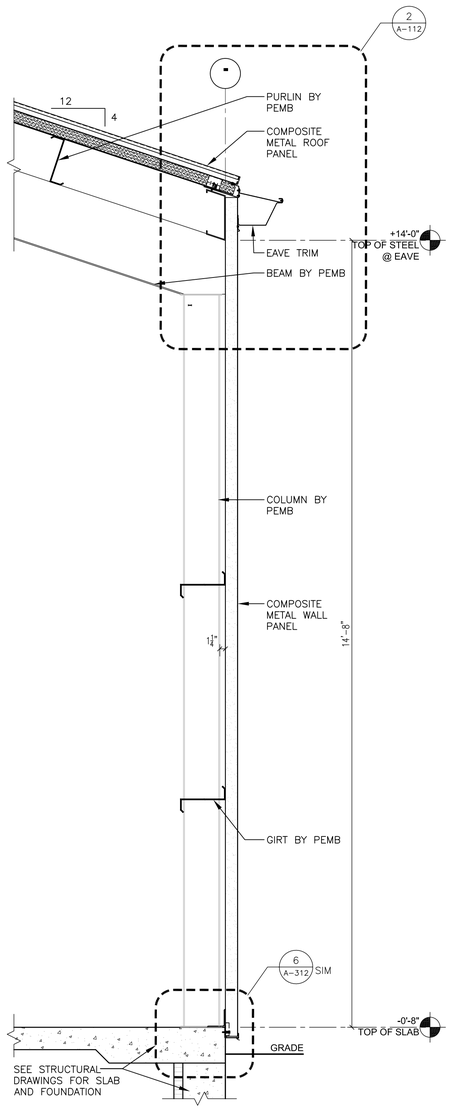


1 A-313 WALL SECTION – LIGHT LOCK
3/4" = 1'-0"

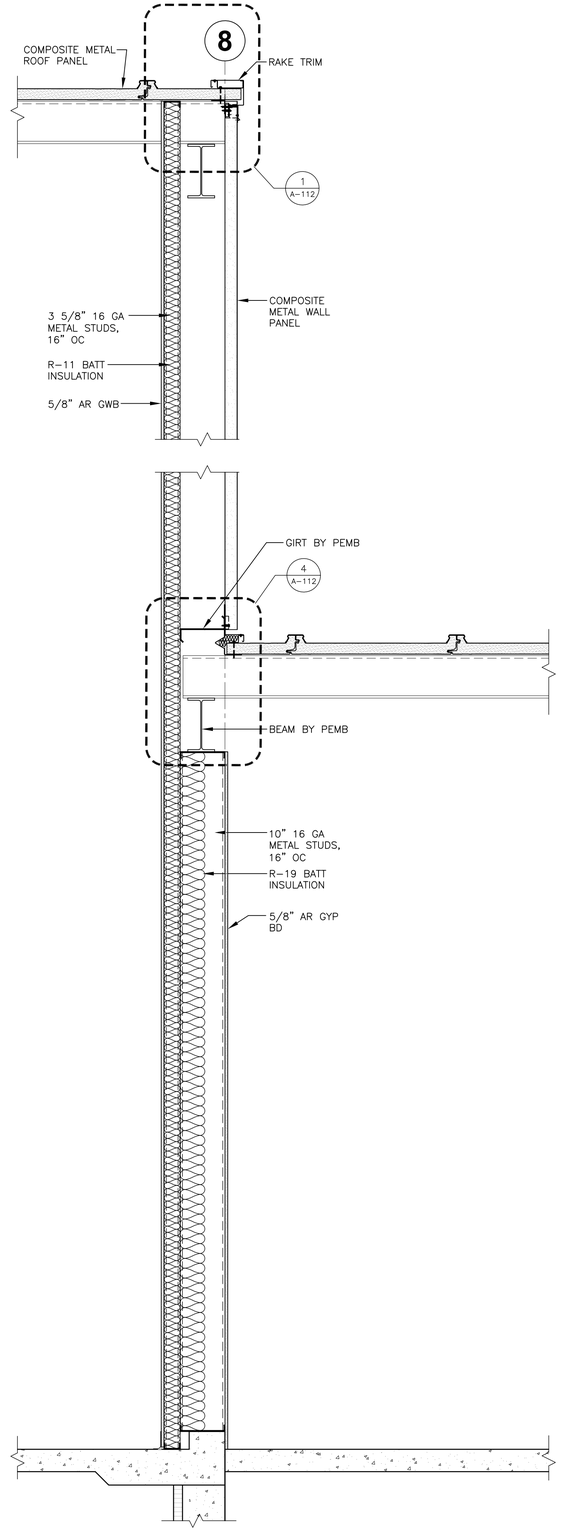


2 A-313 WALL SECTION – LIGHT LOCK
3/4" = 1'-0"

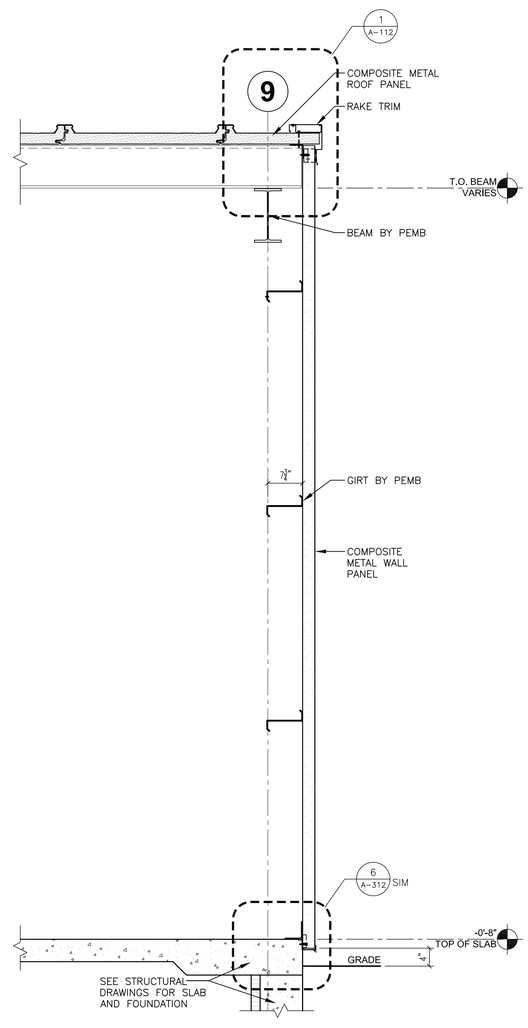


3 A-313 WALL SECTION – LIGHT LOCK
3/4" = 1'-0"

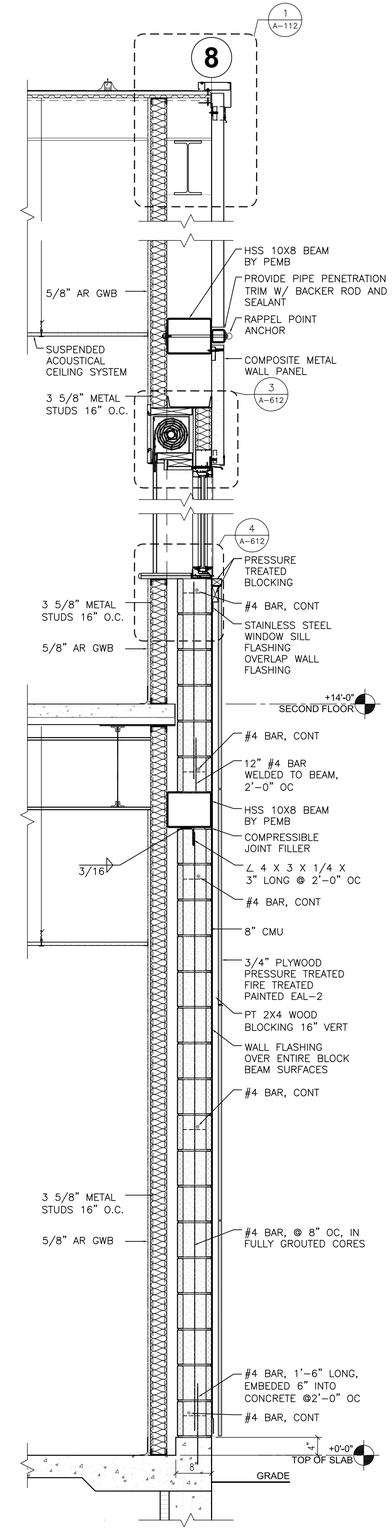


4 A-313 WALL SECTION – EAST WALL
3/4" = 1'-0"

Aug 30,2012 – 10:31am
V:\Designed\Const\P-4460x\44014\CadArch\A-313.dwg
36x24 PLOT SHEET

NYS OFFICE OF GENERAL SERVICES
*Serving New York*

ANDREW M. CUOMO
Governor
ROANN M. DESTITO
COMMISSIONER
JAMES M. DAVIES, A.I.A.
Deputy Commissioner, Design and Construction

WARNING:
THE ALTERATION OF THIS MATERIAL IN ANY WAY, UNLESS DONE UNDER THE DIRECTION OF A COMPARABLE PROFESSIONAL, I.E. ARCHITECT FOR AN ARCHITECT, ENGINEER FOR AN ENGINEER OR LANDSCAPE ARCHITECT FOR A LANDSCAPE ARCHITECT, IS A VIOLATION OF THE NEW YORK STATE EDUCATION LAW AND/OR REGULATIONS AND IS A CLASS 'A' MISDEMEANOR.

REGISTERED ARCHITECT JOHN ROBERT HUTZ 025156 STATE OF NEW YORK

CONTRACT:
CONSTRUCTION

TITLE:
PROVIDE CITYSCAPE COMPLEX

LOCATION:
STATE PREPAREDNESS TRAINING CENTER
5900 AIRPORT ROAD
ORISKANY, NY 13424

CLIENT:
DIVISION OF HOMELAND SECURITY & EMERGENCY SERVICES

ADDENDUM DRAWING 08/29/2012

| MARK | DATE | DESCRIPTION |
|---|---|---|
| | 08/29/2012 | ADDENDUM NO 3 |
| | 07/05/2012 | FINAL SUBMISSION |

| | |
|---|---|
| PROJECT NUMBER: | 44014– C |
| DESIGNED BY: | XXXXX |
| DRAWN BY: | XXXXX |
| FIELD CHECK: | XXXXX |
| APPROVED: | XXXXX |

SHEET TITLE:
WALL SECTIONS

DRAWING NUMBER:
A–313

SHEET X OF X

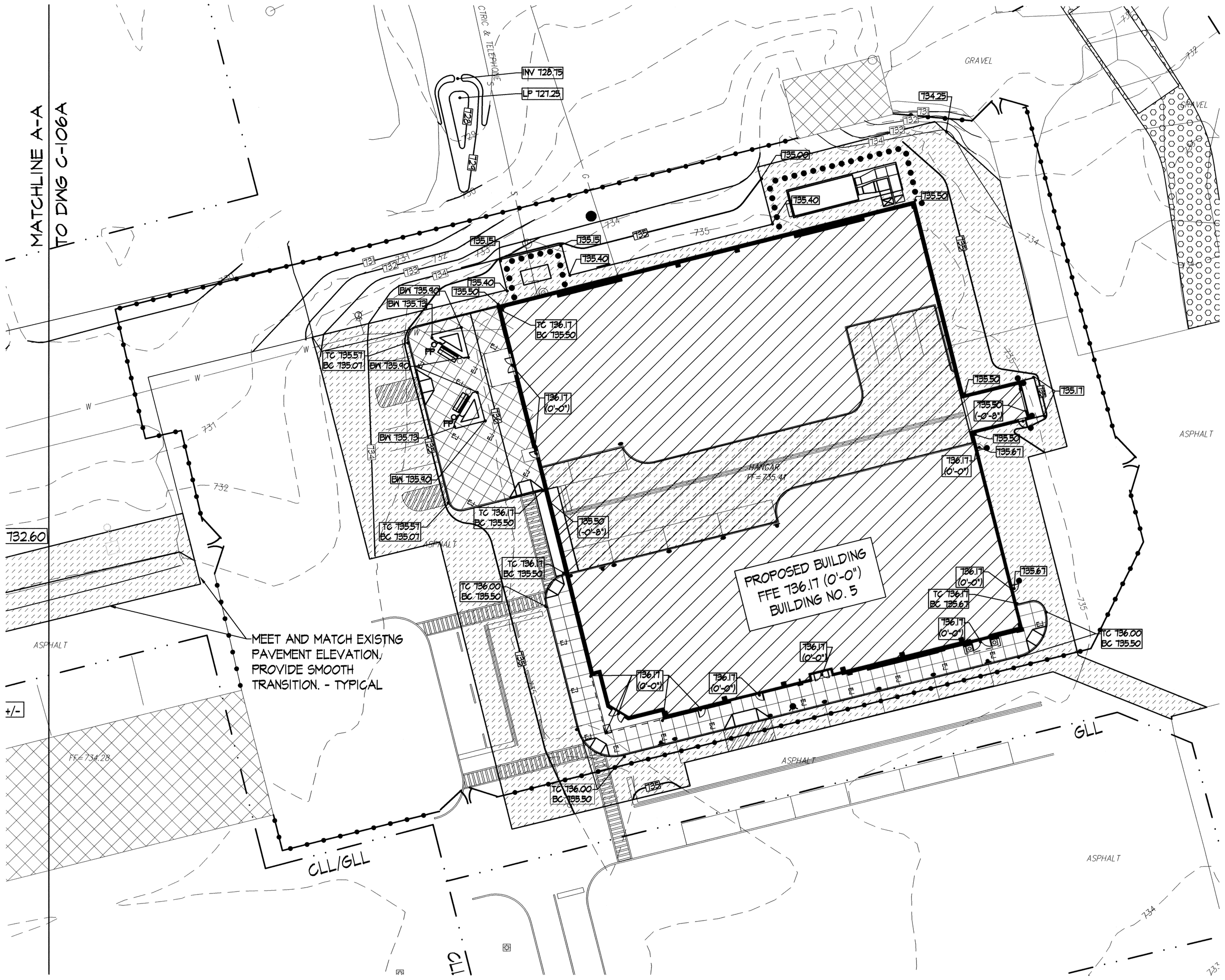


NORTH

# ENLARGED GRADING PLAN

0 20 40
SCALE

NYS OFFICE OF GENERAL SERVICES

*Serving New York*

ANDREW M. CUOMO
Governor
ROANN M. DESTITO
COMMISSIONER
JAMES M. DAVIES, A.I.A.
Deputy Commissioner, Design and Construction

**WARNING:**

THE ALTERATION OF THIS MATERIAL IN ANY WAY, UNLESS DONE UNDER THE DIRECTION OF A COMPARABLE PROFESSIONAL, I.E. ARCHITECT FOR AN ARCHITECT, ENGINEER FOR AN ENGINEER OR LANDSCAPE ARCHITECT FOR A LANDSCAPE ARCHITECT, IS A VIOLATION OF THE NEW YORK STATE EDUCATION LAW AND/OR REGULATIONS AND IS A CLASS 'A' MISDEMEANOR.

REGISTERED LANDSCAPE ARCHITECT
DIANA ANN MILLER
9016
STATE OF NEW YORK

CONTRACT:
CONSTRUCTION

TITLE:
PROVIDE CITYSCAPE COMPLEX

LOCATION:
STATE PREPAREDNESS TRAINING CENTER
5900 AIRPORT ROAD
ORISKANY, NY 13424

CLIENT:
DIVISION OF HOMELAND SECURITY
& EMERGENCY SERVICES

REVISED DRAWING
8/29/2012

| MARK | DATE | DESCRIPTION |
|---|---|---|
| | 07/05/2012 | FINAL SUBMISSION |

| | |
|---|---|
| PROJECT NUMBER: | 44014 – C |
| DESIGNED BY: | DM |
| DRAWN BY: | DM |
| FIELD CHECK: | |
| APPROVED: | |

SHEET TITLE:
ENLARGED
GRADING PLAN

DRAWING NUMBER:
C–106

SHEET OF

Aug 29,2012 – 11:35am
V:\Design And Const\P440xx\44014\CadSite\44014C-106 EnlargedGradingPlanREVISEDDWG.dwg
36x24 PLOT SHEET

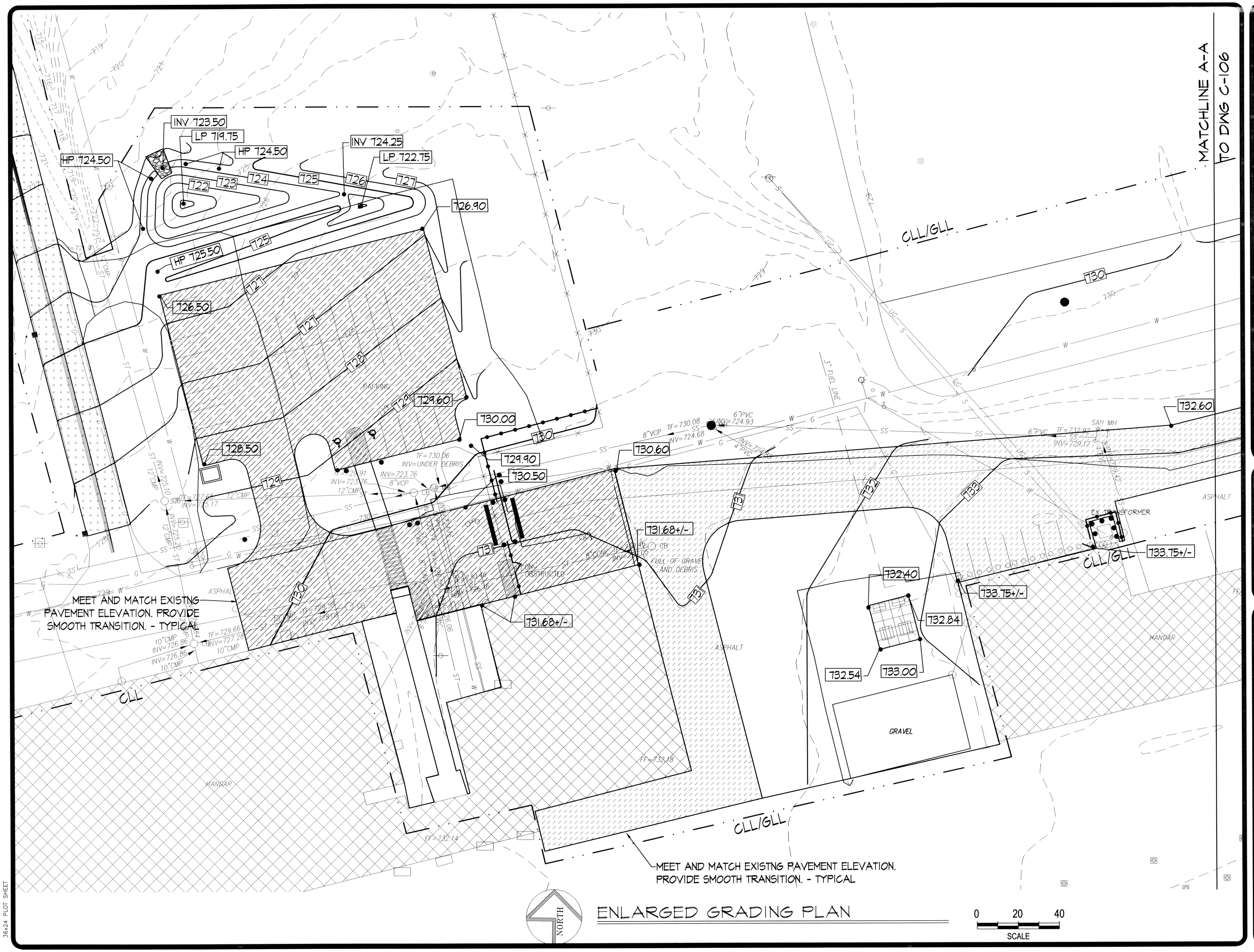


# ENLARGED GRADING PLAN

NYS OFFICE OF GENERAL SERVICES

*Serving New York*

ANDREW M. CUOMO
Governor
ROANN M. DESTITO
COMMISSIONER
JAMES M. DAVIES, A.I.A.
Deputy Commissioner, Design and Construction

WARNING:

THE ALTERATION OF THIS MATERIAL IN ANY WAY, UNLESS DONE UNDER THE DIRECTION OF A COMPARABLE PROFESSIONAL, I.E. ARCHITECT FOR AN ARCHITECT, ENGINEER FOR AN ENGINEER OR LANDSCAPE ARCHITECT FOR A LANDSCAPE ARCHITECT, IS A VIOLATION OF THE NEW YORK STATE EDUCATION LAW AND/OR REGULATIONS AND IS A CLASS "A" MISDEMEANOR.

REGISTERED LANDSCAPE ARCHITECT
DIANNE ANN MARTIN
STATE OF NEW YORK

CONTRACT:
CONSTRUCTION

TITLE:
PROVIDE CITYSCAPE COMPLEX

LOCATION:
STATE PREPAREDNESS TRAINING CENTER
5900 AIRPORT ROAD
ORISKANY, NY 13424

CLIENT:
DIVISION OF HOMELAND SECURITY & EMERGENCY SERVICES

ADDENDUM DRAWING
8/29/2012

| MARK | DATE | DESCRIPTION |
|---|---|---|
| | 07/05/2012 | FINAL SUBMISSION |

| | |
|---|---|
| PROJECT NUMBER: | 44014– C |
| DESIGNED BY: | DM |
| DRAWN BY: | DM |
| FIELD CHECK: | |
| APPROVED: | |

SHEET TITLE:
ENLARGED GRADING PLAN

DRAWING NUMBER:
C–106A

SHEET OF

Aug 29,2012 – 11:26am
V:\Designw\Consrt\P44Dxx\44014\CivilSite\44014C-106A EnlargedGradingPlanAddendaDwg.dwg
36x24 PLOT SHEET

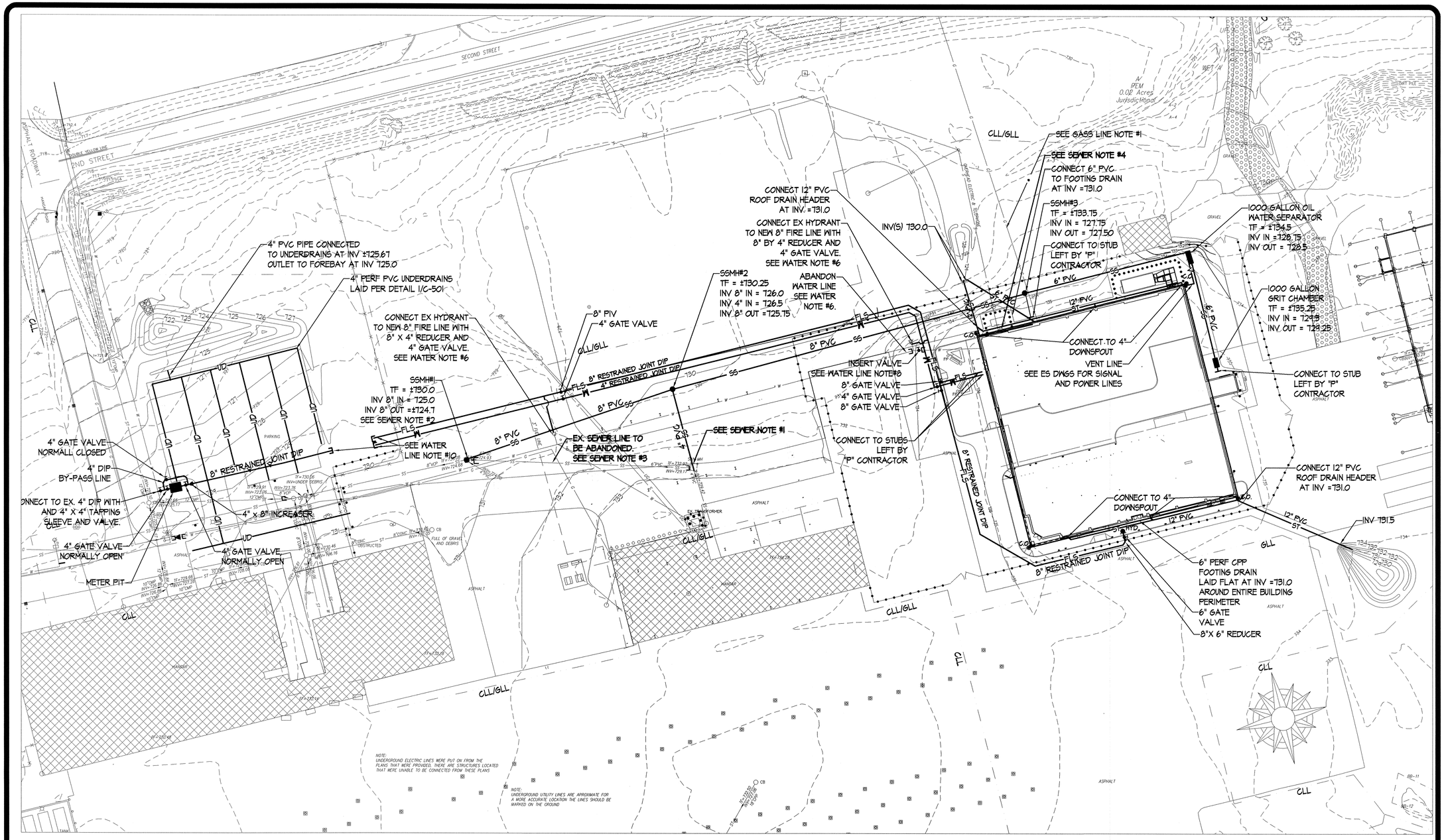


## UTILITY PLAN

SCALE: 1" = 40'

0 40 80

SCALE

### WATER LINE NOTES:

1. CONTACT THE MOHAWK VALLEY WATER AUTHORITY (MVWA) ONE WEEK PRIOR TO MAKING THE TAP, INSTALLATION AND TESTING OF THE PUBLIC WATER LINES. THE MVWA MUST INSPECT THE CONNECTION AND INSTALLATION OF THE WATER LINE AND WITNESS PRESSURE TESTING. THE MVWA WILL ALSO COMPLETE THE BACTERIOLOGICAL TESTING. CONTACT MR. DAVID JONES AT (315) 792-0326.
2. ALL WATER LINES SHALL BE CLASS 52 DUCTILE IRON.
3. ALL PIPE AND FITTINGS SHALL BE RESTRAINED JOINT.
4. ALL WATER MAINS SHALL BE INSTALLED AT A DEPTH OF 5'-0" BELOW GRADE.
5. MAINTAIN A MINIMUM OF 10 FEET HORIZONTAL AND 18" VERTICAL DISTANCE BETWEEN THE WATER LINE AND ANY SANITARY SEWER LINE.
6. AFTER NEW MAIN HAS BEEN DISINFECTED, TESTED AND ACCEPTED FOR SERVICE, SHUT OFF EX. 4" LINE AT HANGAR STREET. DISCONNECT HYDRANTS AND CONNECT TO NEW MAIN. CUT AND CAP EX. 4" AT MAIN AT HANGAR STREET. PROVIDE RESTRAINING GLAND CAP AND THRUST BLOCK ON END TO REMAIN IN SERVICE.
7. PRIOR TO MAKING CONNECTIONS TO EX OR NEW WATER MAINS THAT ARE IN SERVICE, SWAB ALL FITTINGS, VALVES, PIPE AND APPURTENANCE USED TO MAKE THE CONNECTION WITH A 50 PPM SOLUTION OF CHLORINE.
8. PRIOR TO DEMOLITION OF THE BUILDING, PROVIDE INSERT VALVE IN EXISTING LINE. SHUT VALVE, CUT AND CAP LINE TO BUILDING. UPON ACCEPTANCE OF NEW WATER MAINS AND AFTER RE-CONNECTION OF HYDRANTS, BURY VALVE IN CLOSED POSITION.
9. TEMPORARY WATER IS AVAILABLE THROUGH OBATINING A TEMPORARY HYDRANT USE PERMIT FROM THE MOHAWK VALLEY WATER AUTHORITY. NOTE THAT DURING FREEZING CONDITIONS, A HYDRANT USE PERMIT IS NOT AVAILABLE.
10. INSTALL, DISINFECT AND TEST LINE TO POINTS SHOWN. CAP LINES AND PROVIDE MARKERS TO INDICATE LOCATIONS OF CAPS. PROTECT MARKERS DURING CONSTRUCTION AND REPLACE IF DAMAGED OR REMOVED. BOOSTER PUMPS STAITION AND CONNECTIONS TO STATION TO BE INSTALLED UNDER A CONCURRENT CONTRACT. COORDINATE WORK WITH CONTRACTOR.

### SEWER NOTES:

1. REMOVE EXISTING MANHOLE IN ITS ENTIRETY. BACKFILL WITH SELECTED FILL AND COMPACT IN ACCORDANCE WITH THE SPECIFICATION SECTION 310000, "EARTHWORK". CONNECT EX. SEWER LINE TO NEW SEWER MANHOLE WITH 4" PVC PIPE. CONNECTIONS SHALL BE MADE WITH A WATER TIGHT FLEXIBLE CONNECTOR EQUAL TO LINK SEAL FLEXIBLE CONNECTOR BY THUNDERLINE. MATCH EXISTING INVERTS AT POINT OF CONNECTION TO EX. PIPES.
2. REMOVE EXISTING MANHOLE IN ITS ENTIRETY. PROVIDE NEW SEWER MANHOLE. CONNECT EX. SEWER LINES TO NEW SEWER MANHOLE SSMH#2. CONNECTIONS SHALL BE MADE WITH A WATER TIGHT FLEXIBLE CONNECTOR EQUAL TO LINK SEAL FLEXIBLE CONNECTOR BY THUNDERLINE. INVERTS SHALL MATCH EXISTING INVERTS.
3. ABANDON THE EXISTING SEWER LINE IN PLACE. THE LINE SHALL BE CUT, FILLED WITH FLOWABLE FILL AND CAPPED.
4. ABANDON EX SEWER LINE, SEPTIC TANK AND SEWER VENT. REMOVE ABOVE GRADE PORTION OF VENT PIPE ENTIRELY. CUT AND CAP BELOW GRADE PORTION OF VENT LINE 20 FEET FROM BUILDING. LOCATE EXISTING SEWER LINE AND SEPTIC TANK. CUT AND CAP EX. SEWER LINE 20 FEET FROM BUILDING FOOTPRINT. LOCATE THE SEPTIC TANK. CUT AND CAP LINES TO AND FROM THE TANK. BREAK UP THE TOP AND BOTTOM OF THE TANK IN THEIR ENTIRETY, BREAK UP THE WALLS TO TWO FEET BELOW GRADE. BACKFILL WITH SELECTED FILL AND COMPACT TO 95%.
5. PROVIDE BY PASS PUMPING OF SEWER FLOWS UNTIL NEW CONNECTIONS HAVE BEEN TESTED AND ACCEPTED FOR SERVICE.

### GAS LINE NOTES:

1. PRIOR TO DEMOLITION, CONTACT NATIONAL GRID TO PERFORM THE FOLLOWING WORK: TURN OFF GAS LINE, REMOVE METER AND DISCONNECT LINE. CUT LINE BACK 20' FROM BUILDING AND CAP. AFTER NEW BUILDING IS ERECTED, EXTEND EXISTING LINE TO BUILDING, PROVIDE METER AND PUT LINE IN SERVICE. MAKE ALL CONNECTIONS AS REQUIRED. THE CONTACT AT NATIONAL GRID IS CATHY SCHMIDT (315) 798-1910, WR#12736850. INCLUDE IN THE BID AMOUNT, $6,600.00 FOR NATIONAL GRID'S FEE.

Aug 30,2012 – 10:08am
V:\DesignAndConstr\P440xx\44014\CadSite\44014C-107 Utility DrawingAddenda.dwg
36x24 PLOT SHEET

NYS OFFICE OF GENERAL SERVICES

*Serving New York*

ANDREW M. CUOMO
Governor
ROANN M. DESTITO
COMMISSIONER
JAMES M. DAVIES, A.I.A.
Deputy Commissioner, Design and Construction

WARNING:

THE ALTERATION OF THIS MATERIAL IN ANY WAY, UNLESS DONE UNDER THE DIRECTION OF A COMPARABLE PROFESSIONAL, I.E. ARCHITECT FOR AN ARCHITECT, ENGINEER FOR AN ENGINEER OR LANDSCAPE ARCHITECT FOR A LANDSCAPE ARCHITECT, IS A VIOLATION OF THE NEW YORK STATE EDUCATION LAW AND/OR REGULATIONS AND IS A CLASS 'A' MISDEMEANOR.

STATE OF NEW YORK · BRIDGET N. MOREY · 076292 · LICENSED PROFESSIONAL ENGINEER

CONTRACT:
CONSTRUCTION

TITLE:
PROVIDE CITYSCAPE COMPLEX

LOCATION:
STATE PREPAREDNESS TRAINING CENTER
5900 AIRPORT ROAD
ORISKANY, NY 13424

CLIENT:
DIVISION OF HOMELAND SECURITY & EMERGENCY SERVICES

REVISED DRAWING
8/29/12

| MARK | DATE | DESCRIPTION |
|---|---|---|
| | 07/05/2012 | FINAL SUBMISSION |

| | |
|---|---|
| PROJECT NUMBER: | 44014– C |
| DESIGNED BY: | B. MOREY |
| DRAWN BY: | B. MOREY |
| FIELD CHECK: | |
| APPROVED: | |

SHEET TITLE:
UTILITY PLAN

DRAWING NUMBER:
C–107

SHEET OF

# SWPPP NOTES

1. PROJECT INTENT
THE PURPOSE OF THE PROJECT IS TO CONSTRUCT A CITYSCAPE COMPLEX FOR THE DEPARTMENT OF HOMELAND SECURITY AND EMERGENCY SERVICES THAT ALLOWS FOR SIMULATIONS OF REAL WORLD SCENARIOS FOR TRAINING FOR OF FIRST RESPONDERS. THE PROJECT WILL INVOLVE THE CONSTRUCTION OF A NEW 32,000 SQUARE FOOT BUILDING WITHIN THE FOOTPRINT OF AN EXISTING BUILDING, UPGRADE OF UTILITIES, EXPANSION REHABILITATION OF EXISTING PAVEMENTS AND THE INSTALLATION OF SECURITY GATES.

2. PROJECT LOCATION
THE PROJECT IS LOCATED AT THE STATE PREPAREDNESS TRAINING CENTER, LOCATED AT 5900 AIRPORT ROAD, ORISKANY, ONEIDA COUNTY, NY.

3. SITE DESCRIPTION
THE PROJECT IS LOCATED ON THE OLD ONEIDA COUNTY AIRPORT. THE PROJECT AREA WILL ENCOMPASS APPROXIMATELY 11.3 ACRES CONSISTING OF PAVEMENT, BUILDINGS AND GREENSPACE. GREENSPACE CONSISTS OF LAWNS AND TWO ACOE WETLANDS LOCATED ON THE NORTH AND EAST SIDES OF THE PROJECT SITE.
THE EXISTING DRAINAGE AREA IS 36.3 ACRES IN SIZE.
THE EXISTING DRAINAGE AREA IS COMPRISED OF APPROXIMATELY 11.4 ACRES OF IMPERVIOUS AREA AND THE REMAINDER IS GREENSPACE CONSISTING OF LAWNS AND WETLANDS. AFTER CONSTRUCTION THE SITE WILLCONSIST OF 9.3 ACRES OF IMPERVIOUSNESS AND THE REMAINDER IS GREENSPACE.

THE PROJECT SITE CONSISTS OF TWO DRAINAGE AREAS THAT SLOPE BETWEEN 0% TO 3% BETWEEN FROM SOUTH TO NORTH AND WEST TO EAST. DRAINAGE AREAS DISCAHRGE FROM THE SITE TO A SWALE LOCATED ON THE NORTH SIDE OF THE SITE AND TO A GRASSED AREA AND WETALND TO THE EAST.

THE PROJECT IS A REDEVLOPMENT PROJECT WITH A DECREASE IN IMPERVIOUSNESS FROM 31% TO 25%. THE GRADING OF THE SITE HAS NOT CHANGED SIGNIFICANTLY AND THERE IS NO CHANGE IN HYDRAULICS. THERE IS NO INCREASE IN DISCHARGE RATE OR VOLUMES FROM THE SITE.

4. ADJACENT PROPERTY
THE PROJECT SITE IS BORDERED ON ALL SIDES BY ONEIDA COUNTY AIRPORT.

5. GEOTECHINICAL INFORMATION
IN GENERAL THE SOILS AT THE SITE CONSIST OF 2 1/2 INCHES OF TOPSOIL UNDERLAIN BY TWO TO FOUR FEET OF FINE TO BROWN COURSE SAND THAT CONTAINS LITLE TO SOME AMOUNTS OF CLAYEY SILT. THE SAND IS LOOSE TO FIRM IN DENSITY AND IS UNDERLAIN BY FIRM TO COMPACT GLACIAL TILL. THE GLACIAL TILL IS UNDERLAIN BY WEATHERED SHALE.
GROUNDWATER DEPTHS VARIES FROM 6 TO 8 FEET BELOW EXISTING GRADES.

6. CONSTRUCTION PHASING PLAN
REFER TO CONSTRUCTION DRAWINGS FORPHASING.
***AT NO TIME SHALL MORE THAN 5 ACRES OF SOIL BE DISTURBED AT ONE TIME.

7. EROSION AND SEDIMENT CONTROL PRACTICES

REFER TO DRAWING 109 AND THE DETAILS ON DRAWING C-505 AND THE PROJECT MANUAL FOR LOCATION, SIZES AND SPECIFICATIONS OF EROSION AND SEDIMENT CONTROL DEVICES.

TEMPORARY SEDIMENT CONTROL - SILT FENCE
SILT FENCE REDUCES RUNOFF VELOCITY AND CAUSES SETTLING OF SEDIMENT. INSTALL SILT FENCE WHERE SHOWN. INSTALL AROUND ANY STOCKPILED SOIL MATERIALS.

WETLAND PROTECTION FENCE
ORANGE CONSTRUCTION FENCE POSTED WITH "SENSITIVE AREA, STAY OUT" PROTECTS THE ON-SITE WETLANDS FROM UNAUTHORIZED DISTURBANCE.

TEMPORARY SEEDING
TEMPORARY SEEDING REDUCES EROSION AND SEDIMENT LOSS FROM BARE GROUND. PROVIDE TEMPORARY SEEDING TO PROVIDE TEMPORARY COVER FOR DISTURBED EARTH OR SOIL STOCKPILES. PROVIDE TEMPORARY SEEDING PER THE DRAWINGS OR AT A MINIMUM ON DISTURBED AREAS OR SOIL STOCKPILES HELD FOR LONGER THAN 7 DAYS, TEMPORARY SHUT DOWN OF CONSTRUCTION OR WAITING FOR OPTIMAL PLANTING TIME. IN SPRING, SUMMER OR EARLY FALL APPLY RYE GRASS AT AT A RATE OF 1 LB/ 1000 SQ. FT. IN LATE FALL OR EARLY SPRING, APPLY CERTIFIED AROOSTOOK RYE AT 2.5 LBS. / 1000 SQ. FT. APPLY STRAW AT 2 BALES / 1000 SQ. FT OR WOOD FIBER HYDROMULCH AT MANUFACTURER'S RECOMMENDED RATE. STRAW SHALL BE ANCHORED.

CONCRETE WASHOUT
CONCRETE WASHOUT SHALL BE DONE OFF SITE OR THE CONTRACTOR SHALL MAINTAIN A PREFABRICATED WASHOUT CONTAINER EQUAL TO THE LOW PROFILE RAMPED CONTAINER MANUFACTURED BY CONCRETE WASHOUT SYSTEMS, WWW.CONCRETEWASHOUT.COM. ALL WASTE WATER AND SEDIMENT FROM THE UNIT SHALL BE DISPOSED OF OFF -SITE IN ACCORDANCE WITH STATE, LOCAL AND FEDERAL REQUIREMENTS. LOCATION OF TEH UNIT SHALL BE AS DIRECTED BY THE DIRECTOR'S REPRESENTATIVE.

DUST CONTROL
DUST CONTROLS PREVENT SURFACE AND AIR MOVEMENT OF DUST FROM DISTURBED AREAS THAT MAY CAUSE OFF SITE DAMAGE, HEALTH HAZARDS AND TRAFFIC SAFETY PROBLEMS. PROVIDE DUST CONTROL THRU SUCH MEASURES AS SPRINKLING, CHEMICAL SOIL TREATMENTS AND TEMPORARY AND PERMANENT STABILIZATION MEASURES, SUCH AS SEEDING, MULCHING AND INSTALLING EROSION CONTROL BLANKETS. THESE MEASURES WILL PREVENT DUST FROM BLOWING OFF SITE. INSTALL TEMPORARY AND PERMANENT STABILIZATION MEASURES PER THE DRAWINGS, AS SOON AS FINAL GRADES ARE REACHED AND ON SOIL STOCKPILES AND DISTURBED AREAS TO BE LEFT FOR LONGER THAN 7 DAYS. USE SPRINKLING, CHEMICAL SOIL TREATMENTS AND OTHER METHODS AS REQUIRED TO PREVENT BLOWING DUST.

EROSION CONTROL BLANKETS
EROSION CONTROL BLANKETS ARE BIODEGRADABLE MATERIALS USED TO PROTECT SLOPES AND CHANNELS FROM WATER AND WIND EROSION BY INCREASING WATER RETENTION, PROTECTING SEED AND INCREASING WATER INFILTRATION. EROSION CONTROL BLANKETS, TEMPORARY AND PERMANENT, SHALL BE PLACED ON SLOPES AND CHANNELS PER THE DRAWINGS. THE EROSION CONTROL BLANKETS USED SHALL BE MODEL C125BN AS MANUFACTURED BY NORTH AMERICAN GREEN, P.O. BOX 66, EVANSVILLE, IN 47618-9989,(800) 772-2040, WWW.NAGREEN.COM.

STORM DRAIN INLET PROTECTION
INLET PROTECTION IS A TEMPORARY, SOMEWHAT PERMEABLE BARRIER INSTALLED AROUND A STORM WATER INLET THAT PREVENTS SEDIMENT LADEN WATER FROM ENTERING THE SYSTEM BY FILTERING AND/OUR CAUSING SEDIMENT TO SETTLE. INSTALL INLET PROTECTION IMMEDIATELY UPON INSTALLATION OF A STORM DRAIN INLET. USE STONE AND BLOCK PROTECTION AROUND INLETS IN PAVED/GRAVEL AREAS. USE FABRIC PROTECTION AROUND INLETS INSTALLED IN LANDSCAPED AREAS. REMOVE PROTECTION UPON FINAL STABILIZATION OF THE SITE.

OUTLET PROTECTION
OUTLET PROTECTION IS A SECTION OF ROCK PLACED AT THE OUTLET OF CULVERTS, WEIRS, CONDUITS OR CHANNELS. THE ROCK PROTECTION REDUCES THE DEPTH, VELOCITY AND ENERGY OF WATER SO THAT IT DOESN'T ERODE DOWNSTREAM CHANNELS OR REACHES. OUTLET PROTECTION IS TO BE PLACED WHERE SHOWN ON THE DRAWINGS.

PERMANENT SEEDING
PERMANENT SEEDING PREVENTS SOIL EROSION FROM BARE SOIL. ONCE FINAL GRADING OF AN AREA HAS BEEN COMPLETED, PROVIDE PERMANENT SEEDING AND MULCHING PER SPECIFICATION SECTION 329219.

FOREBAYS
THE FOREBAYS PROVIDE FOR SETTLEMENT OF SEDIMENT FROM SITE RUNOFF.THE FOREBAYS SHALL BE INSTALLED WHEN AND WHERE INDICATED ON THE DRAWINGS. THE FOREBAYS SHALL BE USED FOR SEDIMENTCONTROL DURING CONSTRUCTION ACTIVITIES. AFTER THE SITE HAS BEEN STABILIZED, THE FOREBAYS SHALL BE SURVEYED AND RETURNED TO THE GRADES SHOWN ON DRAWINGS C-105.

8. POLLUTION PREVENTION MEASURES
IN ADDITION TO THE EROSION AND SEDIMENT CONTROL MEASURES IMPLEMENTED AT THE SITE, THE CONTRACTOR SHALL IMPLEMENT THE FOLLOWING MEASURES TO PREVENT LITTER, CHEMICALS AND DEBRIS FROM ENTERING THE STORM DRAINS AND DISCHARGES FROM THE SITE OR INTO SENSITIVE AREAS.
1. PROPERLY INSTALL AND MAINTAIN EROSION AND SEDIMENT CONTROL DEVICES AS OUTLINED IN THE PROJECT DOCUMENTS AND IN COMPLIANCE WITH THE LATEST EDITION OF THE NEW YORK STATE STANDARDS AND SPECIFICATIONS FOR EROSION AND SEDIMENT CONTROL.
2. PROPERLY CONTAIN AND DISPOSE OF ALL MATERIALS USED ON SITE.
3. CLEAN UP SPILLS IMMEDIATELY TO MINIMIZE SAFETY HAZARD AND PREVENT SPREADING.
4. ROUTINELY INSPECT AND CLEAN OUT STORM CATCH BASINS AND CONVEYANCES.
5. CONTROL LITTER BY SWEEPING AND PICKING IT UP DAILY.
6. IF POSSIBLE, DO NOT STORE FUEL OR PETROLEUM PRODUCTS ON - SITE. IF FUEL/PROTROLEUM PRODUCTS ARE STORED ON SITE:
   - 6.1. USE SECONDARY CONTAINMENT MEASURES.
   - 6.2. HAVE EQUIPMENT AND MATERIALS ON SITE TO CONTAIN AND CLEAN UP SPILLS IN FUEL STORAGE AREAS OR ON BOARD MAINTENANCE AND FUELING VEHICLES.
   - 6.3. CONTAIN AND CLEAN UP SPILLS IMMEDIATELY.
   - 6.4. PRACTICE PREVENTIVE MAINTENANCE FOR ON-SITE EQUIPMENT.
   - 6.5. OVERSEE ALL FILLING OPERATIONS.
7. PRACTICE GOOD HOUSEKEEPING AND EDUCATE EMPLOYEES ON POLLUTION PREVENTION MEASURES.
   - 7.1. STORE ON SITE MATERIALS AND CHEMICALS IN A NEAT AND ORDERLY MANNER AND IN AREAS DESIGNATED FOR SUCH STORAGE.
   - 7.2. DISPOSE OF GARBAGE, RUBBISH, CONSTRUCTION AND SANITARY WASTE ROUTINELY.
   - 7.3. IMMEDIATELY CLEAN UP ANY SPILLS.
   - 7.4. IMMEDIATELY CLEAN UP ANY SEDIMENTS OR WASTE TRACKED ONTO PUBLIC HIGHWAYS OR TRANSPORTED ONTO ADJACENT PROPERTIES.
   - 7.5. USE DUST CONTROL METHODS.
8. FOR CONSTRUCTION WASTE:
   - 8.1. DESIGNATE A WASTE COLLECTION AREA.
   - 8.2. PROVIDE AN ADEQUATE NUMBER OF CONTAINERS WITH LIDS OR COVERS THAT CAN BE PLACED OVER CONTAINERS PRIOR TO RAINFALL.
   - 8.3. ARRANGE FOR WASTE COLLECTION ON A ROUTINE BASIS AND PRIOR TO CONTAINER OVERFLOW.
   - 8.4. IF A CONTAINER DOES SPILL, CLEAN UP IMMEDIATELY.
   - 8.5. CONSTRUCTION WASTE SHALL BE COLLECTED, REMOVED AND DISPOSED OF IN APPROVED DISPOSAL AREAS.
   - 8.6. DISPOSAL METHODS SHALL MEET THE REQUIREMENTS OF FEDERAL, STATE AND LOCAL REQUIREMENTS.
9. THE CONTRACTOR IS RESPONSIBLE FOR PROVIDING AND MAINTAINING TEMPORARY SANITARY FACILITIES. DOMESTIC WASTE HAULERS SHALL BE CONTRACTED TO REGULARLY REMOVE THE SANITARY WASTE AND TO MAINTAIN THE FACILITIES IN GOOD WORKING ORDER.
10. IF FERTILIZERS ARE USED ON SITE:
   - 10.1. LIMIT THE APPLICATION OF FERTILIZERS TO THE MINIMUM AREA REQUIRED AND USE THE MINIMUM RECOMMENDED AMOUNTS.
   - 10.2. REDUCE THE EXPOSURE OF FERTILIZERS TO STORM WATER RUN OFF BY WORKING THE FERTILIZER INTO THE SOIL.
   - 10.3. APPLY FERTILIZER MORE FREQUENTLY BUT AT A LOWER APPLICATION RATE.

9. EROSION AND SEDIMENT CONTROL PRACTICES, IMPLEMENTATION SCHEDULE

| PRACTICE | INITIAL PLACEMENT | DURATION |
|---|---|---|
| SILT FENCE | PRIOR TO EARTH DISTURBANCE & IMMEDIATELY UPON STOCKPILING OF SOIL STOCKPILES | UNTIL SITE STABILIZATIOM & UNTIL REMOVAL OF STOCK PILE |
| DUST CONTROL | UPON COMMENCEMENT OF SITE DISTURBANCE | UNTIL SITE STABILIZATION |
| VEHICLE WASHING | UPON COMMENCEMENT OF SITE DISTURBANCE | UNTIL SITE STABILIZATION |
| STABILIZED CONSTRUCTION ENTRANCE | PRIOR TO SITE DISTURBANCE | UNTIL SITE STABILIZATION |
| INLET PROTECTION | PRIOR TO EARTH DISTURBANCE | UNTIL SITE STABILIZATION |
| WETLAND PROTECTION | PRIOR TO EARTH DISTURBANCE | UNTIL SITE STABILIZATION |
| CONCRETE WASHOUT | UPON COMMENCEMET OF CONCRETE ACTIVITIES | COMPLETION OF CONCRETE ACTIVITIES |

10. EROSION AND SEDIMENT CONTROL INSPECTIUON AND MAINTENANCE SCHEDULE
1. THE CONTRACTOR SHALL INSPECT THE SILT FENCE AND CONSTRUCTION FENCE SURROUNDING SENSITIVE AREAS (WETLANDS) ON A NIGHTLY BASIS DURING CONSTRUCTION. MAINTENANCE, REPAIR OR REPLACEMENT OF THE FENCING SHALL BE DONE IMMEDIATELY.
2. THE CONTRACTOR SHALL INSPECT ALL REMAINING EROSION AND SEDIMENT CONTROL DEVICES AFTER EACH RAIN EVENT AND ON A WEEKLY BASIS. MAINTENANCE, REPAIR OR REPLACEMENT SHALL BE DONE IMMEDIATELY. MAINTENANCE, REPAIR AND REPLACEMENT SHALL ALSO OCCUR AS DIRECTED BY THE DIRECTOR'S REPRESENTATIVE.
   - 2.1. SILT FENCE: SHALL BE INSPECTED FOR TEARS, BULGING AND FOR AREAS WHERE IT HAS FALLEN DOWN. REPAIR OR REPLACE AS NECESSARY.
   - 2.2. EROSION CONTROL BLANKETS: SHALL BE CHECKED FOR PROPER/MISSING ANCHORING, PLACEMENT DENSITY, DAMAGE DUE TO VANDALISM OR CONSTRUCTION ACTIVITIES. REPAIR OR REPLACE AS NECESSARY.
   - 2.3. STABILIZED CONSTRUCTION ENTRANCE: SHALL BE MAINTAINED SO THAT TRACKING OF SEDIMENT ONTO PUBLIC HIGHWAYS DOES NOT OCCUR. TOP DRESS AS REQUIRED.
   - 2.4. FABRIC INLET PROTECTION: CHECK FOR DAMAGED MATERIALS AND SEDIMENT ACCUMULATION. REPAIR OR REPLACE ANY DAMAGED FABRIC. REMOVE ACCUMULATED SEDIMENT.
   - 2.5. STONE AND BLOCK INLET PROTECTION: CHECK FOR DAMAGED MATERIALS AND ACCUMULATED SEDIMENT. REPAIR OR REPLACE MATERIALS OF CONSTRUCTION AS NEEDED. REMOVE ANY ACCUMULATED SEDIMENT.
   - 2.6. FOREBAYS: SIDE SLOPES SHALL BE CHECKED FOR SCOUR, DAMAGE FROM RODENTS AND SEEPAGE. THE FOREBAYS AND DETENTION PONDS SHALL BE CONTINUOUSLY MONITORED FOR SEDIMENT ACCUMULATION. ONCE SEDIMENT ACCUMULATION HAS REACHED 12" IN DEPTH, IT SHALL BE REMOVED AND DISPOSED OF OFF SITE. THE OUTLETS SHALL BE CHECKED FOR SIGNS OF SCOUR AND OBSTRUCTIONS. REPAIRS SHALL BE MADE AS NECESSARY.
   - 2.7. RIP RAP OUTLETS: SHALL BE CHECKED FOR OBSTRUCTIONS AND SCOUR. REMOVE OBSTRUCTINS AND REPAIR AS NECESSARY.
   - 2.8. CATCH BASINS AND PIPING: SHALL BE CHECKED FOR OBSTRUCTIONS AND SEDIMENT ACCUMULATION. CLEAN AS NECESSARY.

11. SWPPP IMPLEMENTATION
THE CONTRACTOR AND SUBCONTRACTOR(S) ARE RESPONSIBLE FOR COMPLYING WITH AND IMPLEMENTING THE SWPPP. REFER TO SPECIFICATION SECTION 014100, "REGULATORY REQUIREMENTS" AND THE CONTRACTOR'S CERTIFICATION STATEMENT IN THE APPENDIX.

THE DIRECTOR'S REPRESENTATIVE IS RESPONSIBLE FOR PERFORMING AND DOCUMENTING THE INITIAL SITE ASSESSMENT AND PERFORMING THE WEEKLY SITE INSPECTING AS REQUIRED BY THE SPDES PERMIT.

12. POST CONSTRUCTION STORM WATER MANAGEMENT PRACTICES

REFER TO THE DRAWINGS AND PROJECT MANUAL FOR LOCATION, SIZE, MATERIALS AND DETAILS OF CONSTRUCTION.

WATER QUALITY TREATMENT WILL BE ACHIEVED THROUGH THE USE OF FOREBAYS, PERMANENT POOLS WITH DETENTION PONDS AND GRASS FILTER STRIPS.

WATER QUANTITY CONTROL IS NOT REQUIRED.

FOREBAYS: FOREBAYS ARE DESIGNED TO PROVIDE SEDIMENTATION OF MATERIAL FROM STORM WATER RUN OFF. THE FOREBAYS ARE DESIGNED TO TREAT THE ENTIRE WATER QUALITY VOLUME REQUIRED.

13. CONSTRUCTION COMPLETION

UPON CONSTRUCTION COMPLETION:
1. INSPECT THE CATCH BASINS, STORM WATER MANHOLES AND STORM WATER CONVEYANCE SYSTEM FOR OBSTRUCTIONS OR SEDIMENT. REMOVE OBSTRUCTIONS AND CLEAN STRUCTURES AND PIPING AS NECESSARY.
2. FOREBAYS: INSPECT WEIRS FOR STRUCTURAL INTEGRITY AND OBSTRUCTIONS. CHECK EMBANKMENTS FOR SCOUR, SEEPAGE, DAMAGE FROM RODENTS OR UNWANTED PLANT GROWTH. MAKE REPAIRS AS NECESSARY. CHECK OUTLET PROTECTION FOR OBSTRUCTIONS AND SCOURING. MAKE ANY REPAIRS. SURVEYFOREBAYS, REMOVE ALL ACCUMULATED SEDIMENT, RETURN TO GRADES SHOWN ON THE GRADING PLAN.

UPON SITE STABILIZATION:
1. REMOVE ANY REMAINING TEMPORARY EROSION AND SEDIMENT CONTROL MEASURES. STABILIZE AREA.

14. WINTER OPERATIONS/WINTER SHUT DOWN
1. FOR WINTER OPERATIONS
   - 1.1. SNOW SHALL BE PLOWED AND PILED ON PAVED AREAS. SNOW SHALL NOT BE PLOWED ONTO GRASSED AREAS OR INTO WETLAND AREAS.
   - 1.2. DRAINAGE STRUCTURES SHALL BE CHECKED WEEKLY AND AFTER SNOW EVENTS FOR CLOGGING OR FREEZING. STRUCTURES SHALL BE ABLE TO DRAIN FREELY.
   - 1.3. INSTALLATION AND MAINTENANCE OF EROSION AND SEDIMENT CONTROL DEVICES SHALL CONTINUE PER THE DRAWINGS.
2. FOR WINTER SHUTDOWN
   - 2.1. ALL BARE SOILS MUST BE STABILIZED BY ESTABLISHED VEGETATION, STRAW, MATTING, ROCK OR EROSION CONTROL PRODUCTS.
   - 2.2. EROSION AND SEDIMENT CONTROL DEVICES SHALL BE IN PLACE AT ALL SENSITIVE AREAS AND ALONG THE PERIMETER. THIS INCLUDES BUT IS NOT LIMITED TO SILT FENCE, STORM DRAIN INLET PROTECTION, CHECK DAMS AND PIPE OUTLET PROTECTION.
   - 2.3. SOIL STOCKPILES MUST BE PROTECTED WITH SILT FENCE PROTECTION AROUND THE PERIMETER AND STABILIZED WITH ESTABLISHED VEGETATION, STRAW, ROLLED EROSION CONTROL PRODUCT OR DURABLE COVERING.
   - 2.4. THE CONSTRUCTION ENTRANCE SHALL BE MAINTAINED DURING WINTER SHUTDOWN.
   - 2.5. SNOW SHALL BE PLOWED TO ALLOW FOR ENTRANCE TO THE SITE ON A MONTHLY BASIS. SNOW SHALL BE PLOWED AND STOCKPILED ONTO PAVED SURFACES. SNOW PLOWING AND STOCKPILING ONTO GRASSED OR INTO SENSITIVE AREAS WILL NOT BE ALLOWED.
   - 2.6. STABILIZATION MEASURES MUST BE IN PLACE, INCLUDING STABILIZED VEGETATION, WITHIN SEVEN (7) DAYS FROM THE DATE SOIL DISTURBING ACTIVITIES CEASE.

NOT IN CONTRACT - FOR FACILITY USE ONLY
MAINTENANCE OF PERMANENT STORM WATER MANAGEMENT PRACTICES

1. FOREBAYS: THE FOREBAYS SHALL BE INSPECTED ON A YEARLY BASIS FOR THE FOLLOWING:
   - 1.1. SEDIMENT ACCUMULATION: CLEAN OUT THE FOREBAY WHEN SEDIMENT HAS ACCUMULATED TO A DEPTH EQUALING 12".
   - 1.2. EMBANKMENTS SHALL BE CHECKED FOR SEEPAGE, RODENTS AND UNWANTED PLANT GROWTH.
   - 1.3. INLETS SHALL BE CHECKED FOR OBSTRUCTIONS AND SCOURING. REPAIRS SHALL BE MADE AS NECESSARY AND OBSTRUCTIONS REMOVED.
2. DETENTION POND SHALL BE INSPECTED ON AN ANNUAL BASIS FOR THE FOLLOWING:
   - 2.1. EMBANKMENTS SHALL BE CHECKED FOR SEEPAGE, RODENTS AND UNWANTED PLANT GROWTH.
   - 2.2. OUTLETS SHALL BE CHECKED FOR OBSTRUCTIONS AND SCOURING. REPAIRS SHALL BE MADE AS NECESSARY AND OBSTRUCTIONS REMOVED.
   - 2.3. CONTROL STRUCTURE SHALL BE CHECKED FOR OBSTRUCTIONS AND STRUCTURAL INTEGRITY. REPAIRS SHALL BE MADE AS NEEDED AND ANY OBSTRUCTIONS REMOVED.
   - 2.4. MEASURE SEDIMENT ACCUMULATION. REMOVE SEDIMENT WHEN IT HAS REACHED 12" IN DEPTH.
3. STONE CHECK DAMS SHALL BE INSPECTED ON AN ANNUAL BASIS FOR MISSING MATERIAL AND OBSTRUCTIONS. MISSING MATERIAL SHALL BE REPLACED AND OBSTRUCTIONS REMOVED.
4. DRAINAGE STRUCTURES AND PIPING SHALL BE CHECKED ON AN ANNUAL BASIS FOR CLOGGING AND SEDIMENT ACCUMULATION AND CLEANED IF REQUIRED.

OGS
NYS OFFICE OF GENERAL SERVICES
*Serving New York*


ANDREW M. CUOMO
Governor
ROANN M. DESTITO
COMMISSIONER
JAMES M. DAVIES, A.I.A.
Deputy Commissioner, Design and Construction



WARNING:
THE ALTERATION OF THIS MATERIAL IN ANY WAY, UNLESS DONE UNDER THE DIRECTION OF A COMPARABLE PROFESSIONAL, I.E. ARCHITECT FOR AN ARCHITECT, ENGINEER FOR AN ENGINEER OR LANDSCAPE ARCHITECT FOR A LANDSCAPE ARCHITECT, IS A VIOLATION OF THE NEW YORK STATE EDUCATION LAW AND/OR REGULATIONS AND IS A CLASS 'A' MISDEMEANOR.


STATE OF NEW YORK · BRIDGET N. MOREY · 076292 · LICENSED PROFESSIONAL ENGINEER

CONTRACT: CONSTRUCTION

TITLE: PROVIDE CITYSCAPE COMPLEX

LOCATION: STATE PREPAREDNESS TRAINING CENTER
5900 AIRPORT ROAD
ORISKANY, NY 13424

CLIENT: DIVISION OF HOMELAND SECURITY & EMERGENCY SERVICES

ADDENDUM DRAWING
8/29/12

| MARK | DATE | DESCRIPTION |
|---|---|---|
| | 07/05/2012 | FINAL SUBMISSION |

| | |
|---|---|
| PROJECT NUMBER: | 44014– C |
| DESIGNED BY: | B. MOREY |
| DRAWN BY: | B. MOREY |
| FIELD CHECK: | |
| APPROVED: | |

SHEET TITLE:
STORMWATER POLLUTION PREVENTION PLAN

DRAWING NUMBER:
C–110

SHEET X OF X


Aug 30,2012 – 10:01am
V:\DesignAndConstr\P440xx\44014\CadSite\44014C-110 SWPPP.dwg
36x24 PLOT SHEET

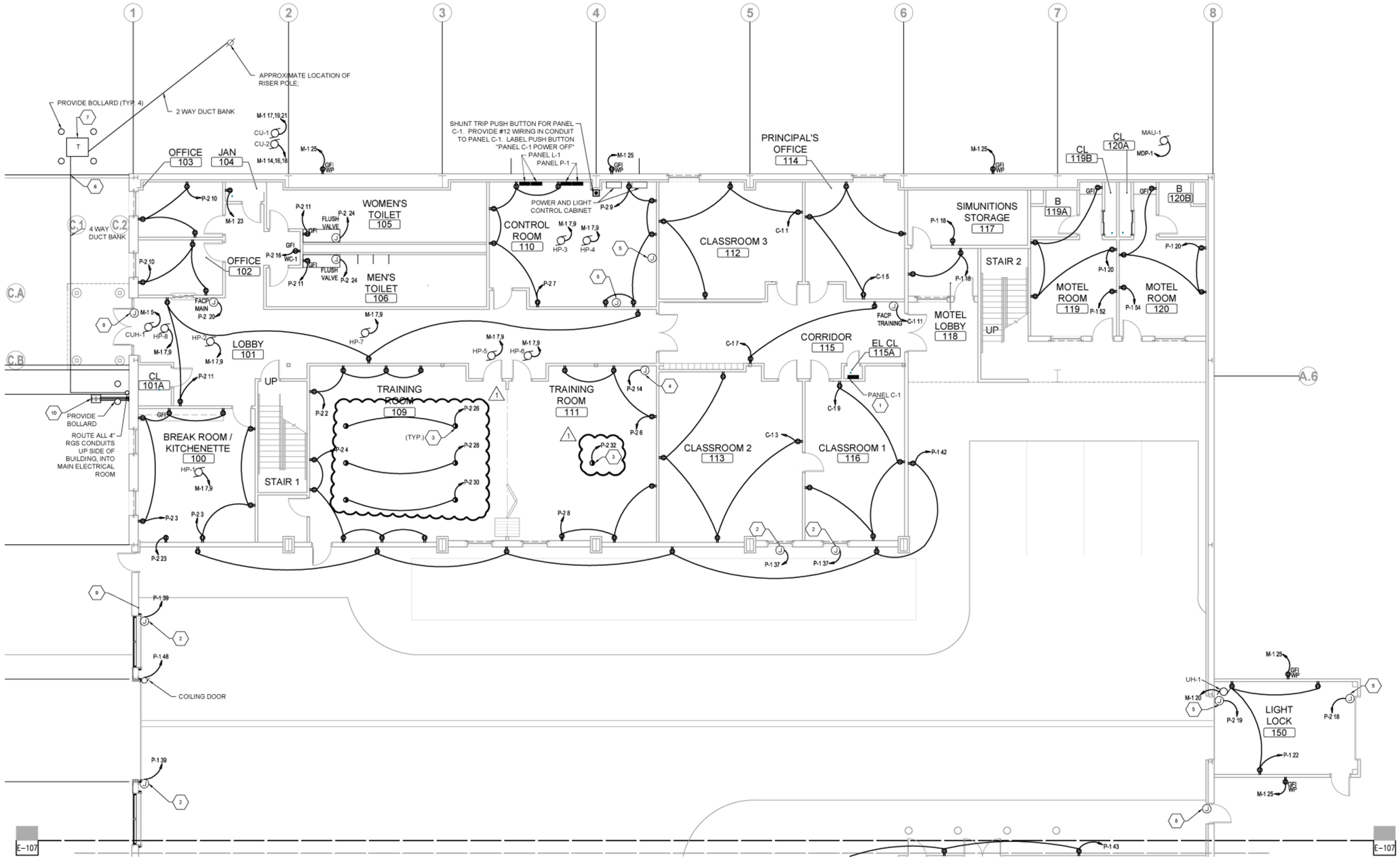


GENERAL NOTES:

A. COORDINATE MOUNTING OF RECEPTACLES ON EXTERIOR WALLS WITH MECHANICAL FIN TUBE RADIATION SYSTEM. INSTALL RECEPTACLE A MINIMUM OF 2 INCHES FROM FIN TUBE RADIATION SYSTEM. COORDINATE WITH GENERAL CONTRACTOR.

1 / E-105 NORTH FIRST FLOOR PLAN – POWER
1/8" = 1'-0"

KEYED NOTES:

1. PROVIDE PANEL C1, 208/120V, 100A FRAME, 100A SHUNT TRIP MAIN CIRCUIT BREAKER. PROVIDE CIRCUITING FOR SHUNT TRIP CONTROL IN CONTROL ROOM 110.
2. PROVIDE POWER FOR MOTORIZED CURTAINS.
3. PROVIDE FLOOR BOX WITH POWER AND COMMUNICATION DEVICES. COORDINATE INSTALLATION WITH GENERAL CONTRACTOR. PROVIDE SEPARATE 1" CONDUITS FOR POWER AND DATA IN FLOOR TO ADJACENT WALL, UP WALL TO ABOVE CEILING.
4. PROVIDE POWER FOR SMARTBOARD.
5. PROVIDE POWER FOR OVERHEAD DOORS. PROVIDE CONTROL DEVICE AND WIRING FOR EACH DOOR IN LIGHT LOCK 150 AND CONTROL ROOM 110.
6. PROVIDE UNDERGROUND FEEDER FROM TRANSFORMER TO MAIN DISTRIBUTION PANEL MDP ON SECOND FLOOR.
7. PROVIDE TRANSFORMER PAD FOR UTILITY PROVIDED TRANSFORMER.
8. PROVIDE 1" CONDUIT FROM BACK BOX AT EXTERIOR DOOR UP TO ADT PANEL IN SECOND FLOOR ELECTRICAL ROOM.
9. PROVIDE CONDUIT AND WIRING FOR PUSHBUTTON CONTROL OF OVERHEAD DOOR.
10. PROVIDE 24" SQUARE HANDHOLE. PROVIDE (4) 2" SPARE CONDUITS FROM MAIN SWITCHBOARD TO HANDHOLD.

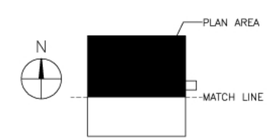


KEY PLAN

NYS OFFICE OF GENERAL SERVICES
Serving New York
ANDREW M. CUOMO
Governor
ROANN M. DESTITO
COMMISSIONER
JAMES M. DAVIES, A.I.A.
Deputy Commissioner, Design and Construction
CONSULTANT
C&S COMPANIES
C&S Engineers, Inc.
499 Col. Eileen Collins Blvd.
Syracuse, New York 13212
Phone: 315-455-2000
Fax: 315-455-9667
www.cscos.com

WARNING:
THE ALTERATION OF THIS MATERIAL IN ANY WAY, UNLESS DONE UNDER THE DIRECTION OF A COMPARABLE PROFESSIONAL, I.E. ARCHITECT FOR AN ARCHITECT, ENGINEER FOR AN ENGINEER OR LANDSCAPE ARCHITECT FOR A LANDSCAPE ARCHITECT, IS A VIOLATION OF THE NEW YORK STATE EDUCATION LAW AND/OR REGULATIONS AND IS A CLASS 'A' MISDEMEANOR.

STATE OF NEW YORK · DOUGLAS J. OBRIST · 078020 · LICENSED PROFESSIONAL ENGINEER

CONTRACT:

TITLE: PROVIDE CITYSCAPE COMPLEX

LOCATION: STATE PREPAREDNESS TRAINING CENTER
5900 AIRPORT ROAD
ORISKANY, NY 13424

CLIENT: DIVISION OF HOMELAND SECURITY & EMERGENCY SERVICES

REVISED DRAWING
08/29/2012

| MARK | DATE | DESCRIPTION |
|---|---|---|
| 1 | 08/29/2012 | REVISED DRAWING |
| | 07/05/2012 | FINAL SUBMISSION |
| | 06/11/2012 | 100% SUBMISSION |

| | |
|---|---|
| PROJECT NUMBER: | 44014 – E |
| DESIGNED BY: | DJO |
| DRAWN BY: | KLW |
| FIELD CHECK: | XXXXX |
| APPROVED: | XXXXX |
| SHEET TITLE: | ELECTRICAL |

NORTH FIRST FLOOR PLAN POWER

DRAWING NUMBER: E-105

SHEET OF

Aug 28,2012 – 1:33pm
F:\Project\190 – NYSOGS\190429034-cityscape\Design\CADD\Sheet Files\Electrical\2009\sheet files\190429034_E-105.dwg
36x24 PLOT SHEET

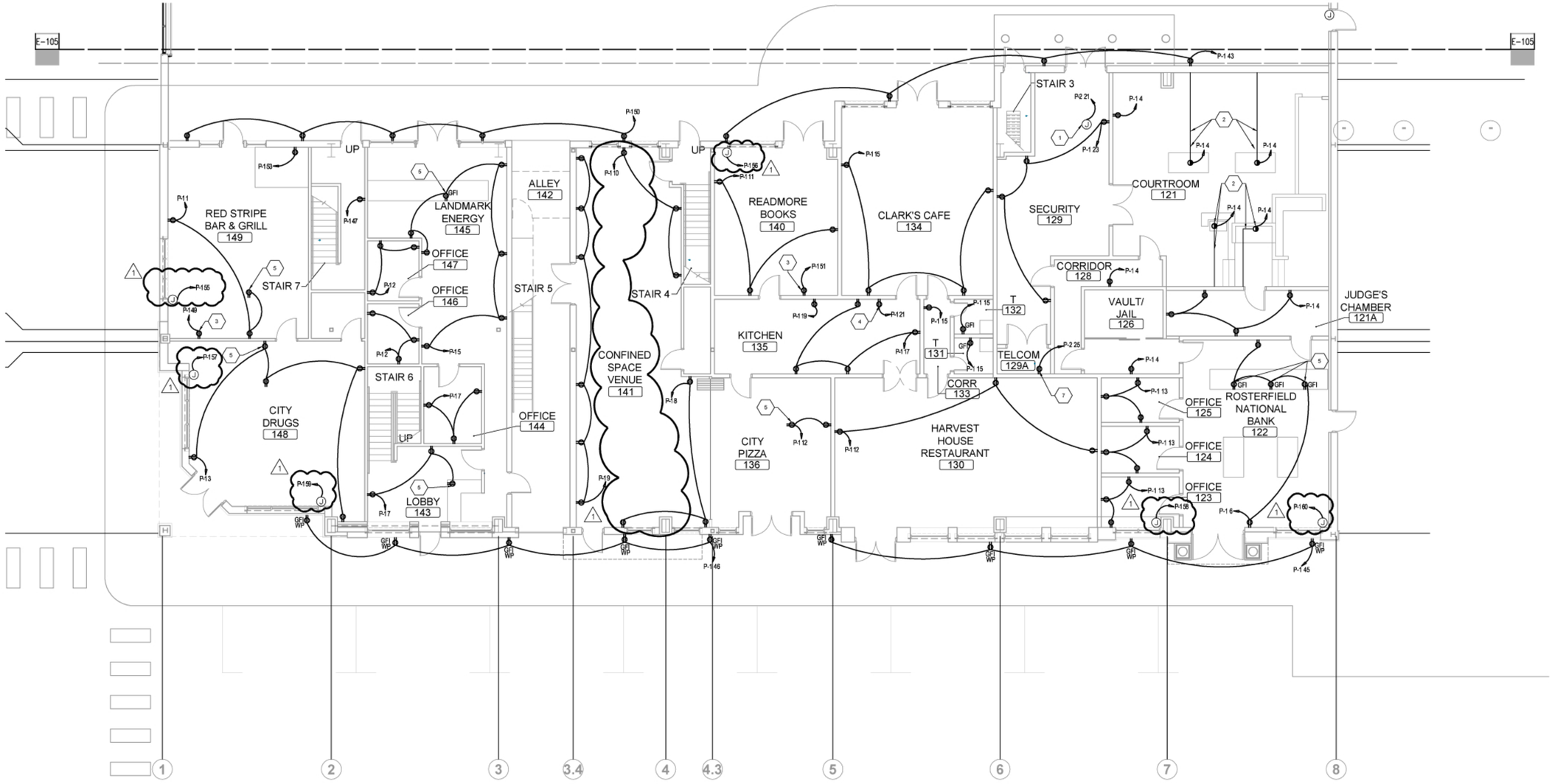


GENERAL NOTES:

A. COORDINATE MOUNTING OF RECEPTACLES ON EXTERIOR WALLS WITH MECHANICAL FIN TUBE RADIATION SYSTEM. INSTALL RECEPTACLE A MINIMUM OF 2 INCHES FROM FIN TUBE RADIATION SYSTEM. COORDINATE WITH GENERAL CONTRACTOR.

KEYED NOTES:

1. PROVIDE POWER FOR MAGNOMETER.
2. PROVIDE FLOORBOX. PROVIDE (2) 1" CONDUIT TO ADJACENT WALL, UP TO 6" ABOVE WALL. INSTALL IN CONJUNCTION WITH POURING OF FLOOR SLAB. COORDINATE WITH GENERAL CONTRACTOR.
3. PROVIDE RECEPTACLE DEDICATED FOR REFRIGERATOR.
4. PROVIDE RECEPTACLE DEDICATED FOR HOT PLATE.
5. PROVIDE RECEPTACLE MOUNTED TO CASEWORK.
6. NOT USED.
7. PROVIDE RECEPTACLE DEDICATED FOR CCTV.

1 (1) SOUTH FIRST FLOOR PLAN – POWER
E-107 1/8" = 1'-0"

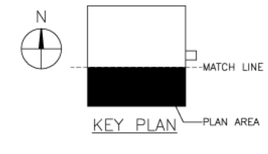

KEY PLAN


NYS OFFICE OF GENERAL SERVICES
Serving New York
ANDREW M. CUOMO
Governor
ROANN M. DESTITO
COMMISSIONER
JAMES M. DAVIES, A.I.A.
Deputy Commissioner, Design and Construction

CONSULTANT

C&S COMPANIES
C&S Engineers, Inc.
499 Col. Eileen Collins Blvd.
Syracuse, New York 13212
Phone: 315-455-2000
Fax: 315-455-9667
www.cscos.com


WARNING:
THE ALTERATION OF THIS MATERIAL IN ANY WAY, UNLESS DONE UNDER THE DIRECTION OF A COMPARABLE PROFESSIONAL, I.E. ARCHITECT FOR AN ARCHITECT, ENGINEER FOR AN ENGINEER OR LANDSCAPE ARCHITECT FOR A LANDSCAPE ARCHITECT, IS A VIOLATION OF THE NEW YORK STATE EDUCATION LAW AND/OR REGULATIONS AND IS A CLASS 'A' MISDEMEANOR.

STATE OF NEW YORK · DOUGLAS J. OBRIST · 078020 · LICENSED PROFESSIONAL ENGINEER

CONTRACT:

TITLE: PROVIDE CITYSCAPE COMPLEX

LOCATION: STATE PREPAREDNESS TRAINING CENTER
5900 AIRPORT ROAD
ORISKANY, NY 13424

CLIENT: DIVISION OF HOMELAND SECURITY & EMERGENCY SERVICES

REVISED DRAWING
08/29/2012

| MARK | DATE | DESCRIPTION |
|---|---|---|
| 1 | 08/29/2012 | REVISED DRAWING |
| | 07/05/2012 | FINAL SUBMISSION |
| | 06/11/2012 | 100% SUBMISSION |

| | |
|---|---|
| PROJECT NUMBER: | 44014 – E |
| DESIGNED BY: | DJO |
| DRAWN BY: | KLW |
| FIELD CHECK: | XXXXX |
| APPROVED: | XXXXX |

SHEET TITLE: ELECTRICAL
SOUTH FIRST FLOOR PLAN POWER

DRAWING NUMBER: E-107

SHEET OF

Aug 28,2012 – 1:32pm
F:\Project\190 – NYSOGS\190429034-cityscape\Design\CADD\Sheet Files\Electrical\2009\sheet files\190429034A_E-107.dwg
36x24 PLOT SHEET

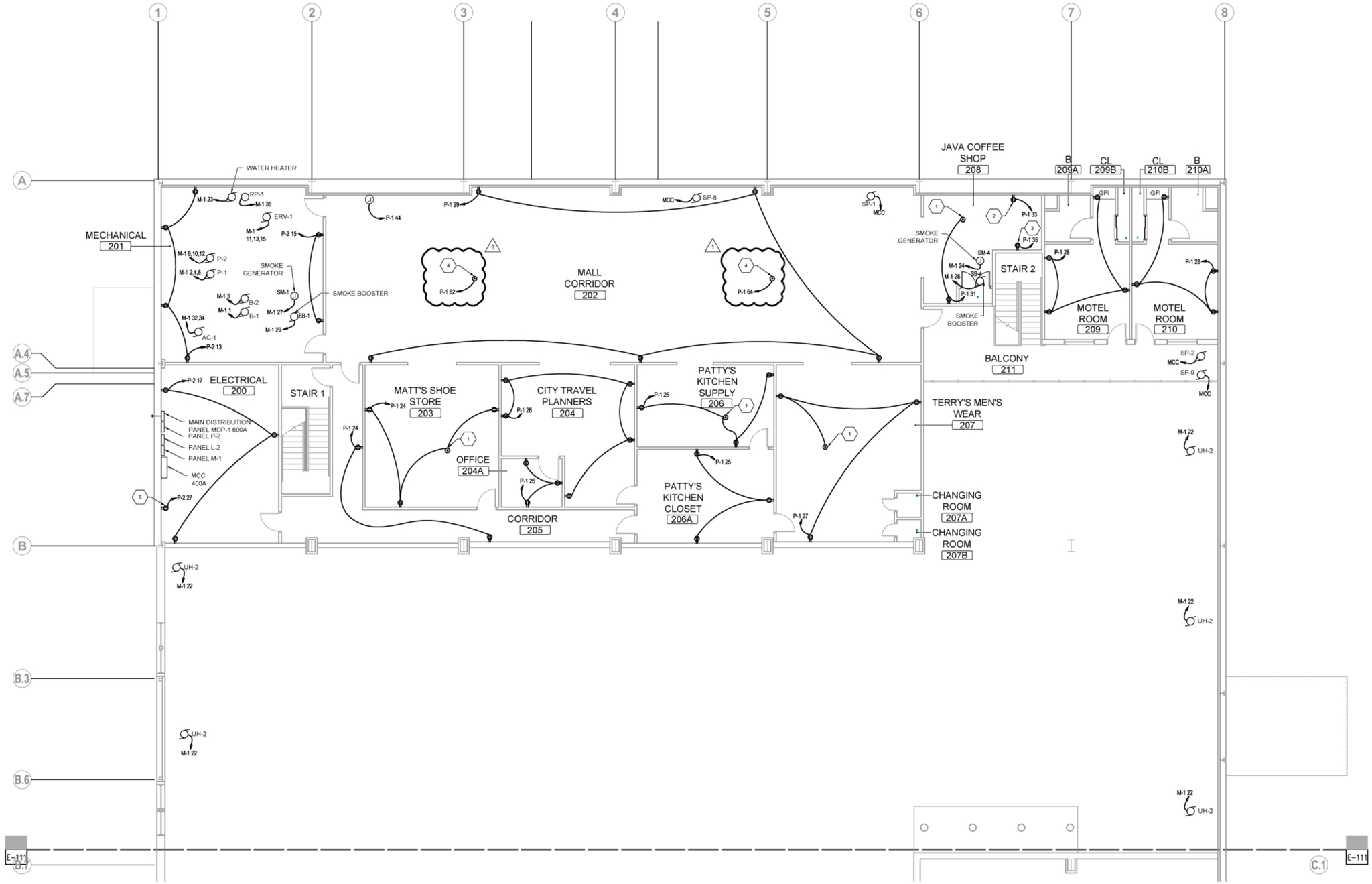


GENERAL NOTES:

A. COORDINATE MOUNTING OF RECEPTACLES ON EXTERIOR WALLS WITH MECHANICAL FIN TUBE RADIATION SYSTEM. INSTALL RECEPTACLE A MINIMUM OF 2 INCHES FROM FIN TUBE RADIATION SYSTEM. COORDINATE WITH GENERAL CONTRACTOR.

KEYED NOTES:

1. PROVIDE POKE THRU DEVICE FOR CASH REGISTERS.
2. PROVIDE RECEPTACLE DEDICATED FOR REFRIGERATOR.
3. PROVIDE RECEPTACLE DEDICATED FOR HOT PLATE.
4. PROVIDE POKE THRU WITH POWER AND COMMUNICATION CIRCUITS. COORDINATE INSTALLATION INTO FLOOR WITH GENERAL CONTRACTOR.
5. PROVIDE RECEPTACLE DEDICATED FOR CCTV.

1 / E-109 NORTH SECOND FLOOR PLAN – POWER
1/8" = 1'-0"

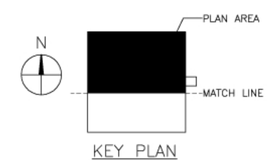


KEY PLAN

NYS OFFICE OF GENERAL SERVICES
Serving New York
ANDREW M. CUOMO
Governor
ROANN M. DESTITO
COMMISSIONER
JAMES M. DAVIES, A.I.A.
Deputy Commissioner, Design and Construction

CONSULTANT

C&S COMPANIES

C&S Engineers, Inc.
499 Col. Eileen Collins Blvd.
Syracuse, New York 13212
Phone: 315-455-2000
Fax: 315-455-9667
www.cscos.com

WARNING:
THE ALTERATION OF THIS MATERIAL IN ANY WAY, UNLESS DONE UNDER THE DIRECTION OF A COMPARABLE PROFESSIONAL, I.E. ARCHITECT FOR AN ARCHITECT, ENGINEER FOR AN ENGINEER OR LANDSCAPE ARCHITECT FOR A LANDSCAPE ARCHITECT, IS A VIOLATION OF THE NEW YORK STATE EDUCATION LAW AND/OR REGULATIONS AND IS A CLASS 'A' MISDEMEANOR.

STATE OF NEW YORK · DOUGLAS J. OBRIST · 078020 · LICENSED PROFESSIONAL ENGINEER

CONTRACT:

TITLE:
PROVIDE CITYSCAPE COMPLEX

LOCATION:
STATE PREPAREDNESS TRAINING CENTER
5900 AIRPORT ROAD
ORISKANY, NY 13424

CLIENT:
DIVISION OF HOMELAND SECURITY & EMERGENCY SERVICES

REVISED DRAWING
08/29/2012

| MARK | DATE | DESCRIPTION |
|---|---|---|
| 1 | 08/29/2012 | REVISED DRAWING |
| | 07/05/2012 | FINAL SUBMISSION |
| | 06/11/2012 | 100% SUBMISSION |

| | |
|---|---|
| PROJECT NUMBER: | 44014–E |
| DESIGNED BY: | DJO |
| DRAWN BY: | KLW |
| FIELD CHECK: | XXXXX |
| APPROVED: | XXXXX |

SHEET TITLE: ELECTRICAL
NORTH SECOND FLOOR PLAN POWER

DRAWING NUMBER:
E–109

SHEET OF

Aug 28,2012 – 1:31pm
F:\Project\190 – NYSDGS\190429034–cityscape\Design\CADD\Sheet Files\Electrical\2009\sheet files\190429034A_E-109.dwg
36x24 PLOT SHEET

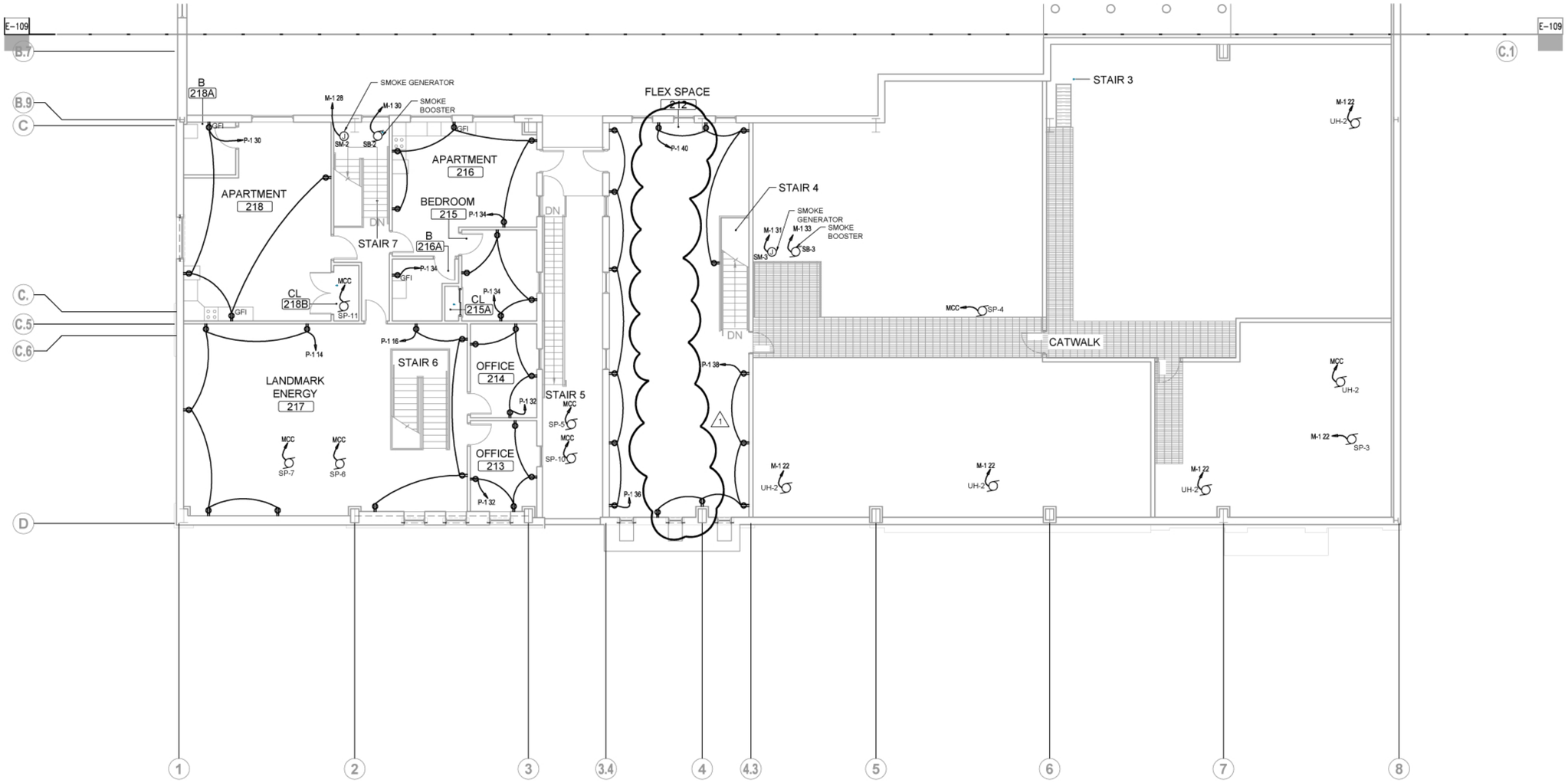


GENERAL NOTES:

A. COORDINATE MOUNTING OF RECEPTACLES ON EXTERIOR WALLS WITH MECHANICAL FIN TUBE RADIATION SYSTEM. INSTALL RECEPTACLE A MINIMUM OF 2 INCHES FROM FIN TUBE RADIATION SYSTEM. COORDINATE WITH GENERAL CONTRACTOR.

KEYED NOTES:

1 NOT USED

1 SOUTH SECOND FLOOR PLAN – POWER
E-111 1/8" = 1'-0"

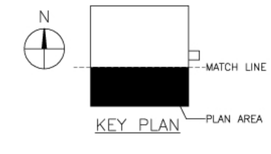


KEY PLAN

NYS OFFICE OF GENERAL SERVICES
Serving New York
ANDREW M. CUOMO
Governor
ROANN M. DESTITO
COMMISSIONER
JAMES M. DAVIES, A.I.A.
Deputy Commissioner, Design and Construction

CONSULTANT

C&S COMPANIES
C&S Engineers, Inc.
499 Col. Eileen Collins Blvd.
Syracuse, New York 13212
Phone: 315-455-2000
Fax: 315-455-9667
www.cscos.com

WARNING:
THE ALTERATION OF THIS MATERIAL IN ANY WAY, UNLESS DONE UNDER THE DIRECTION OF A COMPARABLE PROFESSIONAL, I.E. ARCHITECT FOR AN ARCHITECT, ENGINEER FOR AN ENGINEER OR LANDSCAPE ARCHITECT FOR A LANDSCAPE ARCHITECT, IS A VIOLATION OF THE NEW YORK STATE EDUCATION LAW AND/OR REGULATIONS AND IS A CLASS 'A' MISDEMEANOR.

STATE OF NEW YORK · DOUGLAS J. OBRIST · 078022 · LICENSED PROFESSIONAL ENGINEER

CONTRACT:

TITLE:
PROVIDE CITYSCAPE COMPLEX

LOCATION:
STATE PREPAREDNESS TRAINING CENTER
5900 AIRPORT ROAD
ORISKANY, NY 13424

CLIENT:
DIVISION OF HOMELAND SECURITY & EMERGENCY SERVICES

REVISED DRAWING
08/29/2012

| MARK | DATE | DESCRIPTION |
|---|---|---|
| 1 | 08/29/2012 | REVISED DRAWING |
| | 07/05/2012 | FINAL SUBMISSION |
| | 06/11/2012 | 100% SUBMISSION |

| | |
|---|---|
| PROJECT NUMBER: | 44014 – E |
| DESIGNED BY: | DJO |
| DRAWN BY: | KLW |
| FIELD CHECK: | XXXXX |
| APPROVED: | XXXXX |

SHEET TITLE: ELECTRICAL
SOUTH SECOND FLOOR PLAN POWER

DRAWING NUMBER:
E-111

SHEET OF

Aug 28,2012 – 1:30pm
F:\Project\190 – NYSOGS\190429034-cityscape\Design\CADD\Sheet Files\Electrical\2009\sheet files\190429034A_E-111.dwg
36x24 PLOT SHEET

## PANEL L-1 SCHEDULE

100 AMPS | 208/120 VOLTS | 3 PHASE | 4 WIRE | 84 POLE SPACES

MAIN BREAKER - AMPS | LUGS 100 AMPS | GROUND BAR CU | SC RATING 65 KAIC | ENCLOSURE NEMA 1

INSTALLATION SURFACE | LOCATION CONTROL ROOM | PANEL FEEDER MDP-1 | NOTES

| DESCRIPTION | WIRE | CON | CB. AMPS | CIR# | CIR# | CB. AMPS | CON | WIRE | DESCRIPTION |
|---|---|---|---|---|---|---|---|---|---|
| LIGHTING RM 203 | 2#12, 1#12G | 1/2 | 20 | 1 | 2 | 20 | 1/2 | 2#12, 1#12G | LIGHTING STAIR 2 |
| LIGHTING RM 204, 204A | 2#12, 1#12G | 1/2 | 20 | 3 | 4 | 20 | 1/2 | 2#12, 1#12G | LIGHTING RM 150 |
| LIGHTING RM 117, 118 | 2#12, 1#12G | 1/2 | 20 | 5 | 6 | 20 | 1/2 | 2#12, 1#12G | LIGHTING RM 121 |
| LIGHTING RM 119, 120 | 2#12, 1#12G | 1/2 | 20 | 7 | 8 | 20 | 1/2 | 2#12, 1#12G | LIGHTING RM 129, 129A |
| LIGHTING RM 206 | 2#12, 1#12G | 1/2 | 20 | 9 | 10 | 20 | 1/2 | 2#12, 1#12G | LIGHTING RM 126, 128, 121A |
| LIGHTING RM 205 | 2#12, 1#12G | 1/2 | 20 | 11 | 12 | 20 | 1/2 | 2#12, 1#12G | LIGHTING RM 122 |
| LIGHTING RM 137, 138, 139, 140 | 2#12, 1#12G | 1/2 | 20 | 13 | 14 | 20 | 1/2 | 2#12, 1#12G | LIGHTING RM 123, 124, 125 |
| LIGHTING RM 135, 136 | 2#12, 1#12G | 1/2 | 20 | 15 | 16 | 20 | 1/2 | 2#12, 1#12G | LIGHTING RM 130 |
| LIGHTING RM 141 | 2#12, 1#12G | 1/2 | 20 | 17 | 18 | 20 | 1/2 | 2#12, 1#12G | LIGHTING RM 130 |
| LIGHTING RM 141 | 2#12, 1#12G | 1/2 | 20 | 19 | 20 | 20 | 1/2 | 2#12, 1#12G | LIGHTING RM 131, 132, 133, 134 |
| LIGHTING RM 145 | 2#12, 1#12G | 1/2 | 20 | 21 | 22 | 20 | 1/2 | 2#12, 1#12G | LIGHTING STAIR 3 |
| LIGHTING RM 145 | 2#12, 1#12G | 1/2 | 20 | 23 | 24 | 20 | 1/2 | 2#12, 1#12G | LIGHTING RM 148 |
| LIGHTING RM 146, 147 | 2#12, 1#12G | 1/2 | 20 | 25 | 26 | 20 | 1/2 | 2#12, 1#12G | LIGHTING RM 148 |
| LIGHTING RM 143, 144, STAIR 6 | 2#12, 1#12G | 1/2 | 20 | 27 | 28 | 20 | 1/2 | 2#12, 1#12G | LIGHTING RM 149 |
| LIGHTING RM 207 | 2#12, 1#12G | 1/2 | 20 | 29 | 30 | 20 | 1/2 | 2#12, 1#12G | LIGHTING RM 149 |
| LIGHTING RM 202 | 2#12, 1#12G | 1/2 | 20 | 31 | 32 | 20 | 1/2 | 2#12, 1#12G | STREET SCAPE STREET LAMPS |
| LIGHTING RM 202 | 2#12, 1#12G | 1/2 | 20 | 33 | 34 | 20 | 1/2 | 2#12, 1#12G | CATWALK AISLE LIGHTING |
| LIGHTING RM 208 | 2#12, 1#12G | 1/2 | 20 | 35 | 36 | 20 | 1/2 | 2#12, 1#12G | CATWALK HOUSE LIGHTING |
| LIGHTING RM 209, 210 | 2#12, 1#12G | 1/2 | 20 | 37 | 38 | 20 | 1/2 | 2#12, 1#12G | LIGHTING RM 217 |
| LIGHTING RM 212 | 2#12, 1#12G | 1/2 | 20 | 39 | 40 | 20 | 1/2 | 2#12, 1#12G | LIGHTING RM 218, 216, 215 |
| LIGHTING RM 212 | 2#12, 1#12G | 1/2 | 20 | 41 | 42 | 20 | 1/2 | 2#12, 1#12G | LIGHTING RM 213, 214 |
| LIGHTING, CATWALK | 2#12, 1#12G | 1/2 | 20 | 43 | 44 | 20 | 1/2 | 2#12, 1#12G | HARVEST HOUSE SIGN |
| RED STRIPE SIGN | 2#12, 1#12G | 1/2 | 20 | 45 | 46 | 20 | 1/2 | 2#12, 1#12G | ROSTERFIELD SIGN |
| ROSTERFIELD NTL BANK SIGN | 2#12, 1#12G | 1/2 | 20 | 47 | 48 | 20 | 1/2 | 2#12, 1#12G | MATT'S SHOE STORE SIGN |
| CITY DRUGS SIGN | 2#12, 1#12G | 1/2 | 20 | 49 | 50 | 20 | 1/2 | 2#12, 1#12G | STREET SCAPE SUSPENDED LTG |
| LIGHTING STAIR 7 | 2#12, 1#12G | 1/2 | 20 | 51 | 52 | 20 | 1/2 | 2#12, 1#12G | PATTY'S KITCHEN SUPPLY SIGN |
| CLARK'S CAFE SIGN | 2#12, 1#12G | 1/2 | 20 | 53 | 54 | 20 | 1/2 | 2#12, 1#12G | STREET SCAPE SUSPENDED LTG |
| LIGHTING STAIR 4 AND CLOSET | 2#12, 1#12G | 1/2 | 20 | 55 | 56 | 20 | 1/2 | 2#12, 1#12G | STREET SCAPE SUSPENDED LTG |
| LIGHTING 1ST FLOOR MOTEL SITE | 2#12, 1#12G | 1/2 | 20 | 57 | 58 | 20 | 1/2 | 2#12, 1#12G | STREET SCAPE SUSPENDED LTG |
| STREET SCAPE CONTROL PANEL | 2#12, 1#12G | 1/2 | 20 | 59 | 60 | 20 | 1/2 | 2#12, 1#12G | STREET SCAPE SUSPENDED LTG |
| JUNCTION BOX CORRIDOR 115 | 2#12, 1#12G | 1/2 | 20 | 61 | 62 | 20 | 1/2 | 2#12, 1#12G | STREET SCAPE SUSPENDED LTG |
| APARTMENT LOBBY | 2#12, 1#12G | 1/2 | 20 | 63 | 64 | 20 | 1/2 | 2#12, 1#12G | STREET SCAPE SUSPENDED LTG |
| STREET SCAPE SOUTH POLES | 2#12, 1#12G | 1/2 | 20 | 65 | 66 | 20 | 1/2 | 2#12, 1#12G | STREET SCAPE SUSPENDED LTG |
| STREET SCAPE SUSPENDED LTG | 2#12, 1#12G | 1/2 | 20 | 67 | 68 | 20 | 1/2 | 2#12, 1#12G | STREET SCAPE SUSPENDED LTG |
| STREET SCAPE SUSPENDED LTG | 2#12, 1#12G | 1/2 | 20 | 69 | 70 | 20 | 1/2 | 2#12, 1#12G | STREET SCAPE SUSPENDED LTG |
| STREET SCAPE SUSPENDED LTG | 2#12, 1#12G | 1/2 | 20 | 71 | 72 | 20 | 1/2 | 2#12, 1#12G | STREET SCAPE SUSPENDED LTG |
| STREET SCAPE SUSPENDED LTG | 2#12, 1#12G | 1/2 | 20 | 73 | 74 | 20 | 1/2 | 2#12, 1#12G | STREET SCAPE SUSPENDED LTG |
| | | | | 75 | 76 | | | | |
| | | | | 77 | 78 | | | | |
| | | | | 79 | 80 | | | | |
| | | | | 81 | 82 | | | | |
| | | | | 83 | 84 | | | | |

## PANEL P-1 SCHEDULE

100 AMPS | 208/120 VOLTS | 3 PHASE | 4 WIRE | 42 POLE SPACES

MAIN BREAKER - AMPS | LUGS 100 AMPS | GROUND BAR CU | SCRATING 65 KAIC | ENCLOSURE NEMA 1

INSTALLATION SURFACE | LOCATION CONTROL ROOM | PANEL FEEDER MDP-1 | NOTES

| DESCRIPTION | WIRE | CON | CB. AMPS | CIR# | CIR# | CB. AMPS | CON | WIRE | DESCRIPTION |
|---|---|---|---|---|---|---|---|---|---|
| RECEPTS RM 149 | 2#12, 1#12G | 1/2 | 20 | 1 | 2 | 20 | 1/2 | 2#12, 1#12G | RECEPTS RM 146, 147 |
| RECEPTS RM 148 | 2#12, 1#12G | 1/2 | 20 | 3 | 4 | 20 | 1/2 | 2#12, 1#12G | RECEPTS RM 121A, 121, 126, 128 |
| RECEPTS RM 145 | 2#12, 1#12G | 1/2 | 20 | 5 | 6 | 20 | 1/2 | 2#12, 1#12G | RECEPTS RM 122 |
| RECEPTS RM 143, 144 | 2#12, 1#12G | 1/2 | 20 | 7 | 8 | 20 | 1/2 | 2#12, 1#12G | EAST RECEPTS RM 141 |
| WEST RECEPTS RM 141 | 2#12, 1#12G | 1/2 | 20 | 9 | 10 | 20 | 1/2 | 2#12, 1#12G | NORTH RECEPTS RM 141 |
| RECEPTS RM 137, 138, 139, 140 | 2#12, 1#12G | 1/2 | 20 | 11 | 12 | 20 | 1/2 | 2#12, 1#12G | RECEPTS RM 136, 130 |
| RECEPTS RM 123, 124, 125 | 2#12, 1#12G | 1/2 | 20 | 13 | 14 | 20 | 1/2 | 2#12, 1#12G | RECEPTS RM 217 |
| RECEPTS RM 131, 132, 133, 134 | 2#12, 1#12G | 1/2 | 20 | 15 | 16 | 20 | 1/2 | 2#12, 1#12G | RECEPTS RM 217 |
| RECEPTS RM 135 | 2#12, 1#12G | 1/2 | 20 | 17 | 18 | 20 | 1/2 | 2#12, 1#12G | RECEPTS RM 117, 118 |
| WEST REGRIFERATOR RM 135 | 2#12, 1#12G | 1/2 | 20 | 19 | 20 | 20 | 1/2 | 2#12, 1#12G | RECEPTS RM 119, 120 |
| EAST REFRIGERATOR RM 135 | 2#12, 1#12G | 1/2 | 20 | 21 | 22 | 20 | 1/2 | 2#12, 1#12G | RECEPTS RM 150 |
| RECEPTS RM 129 | 2#12, 1#12G | 1/2 | 20 | 23 | 24 | 20 | 1/2 | 2#12, 1#12G | RECEPTS RM 205, 203 |
| RECEPTS RM 206 | 2#12, 1#12G | 1/2 | 20 | 25 | 26 | 20 | 1/2 | 2#12, 1#12G | RECEPTS RM 204, 204A |
| RECEPTS RM 207 | 2#12, 1#12G | 1/2 | 20 | 27 | 28 | 20 | 1/2 | 2#12, 1#12G | RECEPTS RM 209, 210 |
| RECEPTS RM 202 | 2#12, 1#12G | 1/2 | 20 | 29 | 30 | 20 | 1/2 | 2#12, 1#12G | RECEPTS RM 218 |
| RECEPTS RM 208 | 2#12, 1#12G | 1/2 | 20 | 31 | 32 | 20 | 1/2 | 2#12, 1#12G | RECEPTS RM 213, 314 |
| REFRIGERATOR RM 208 | 2#12, 1#12G | 1/2 | 20 | 33 | 34 | 20 | 1/2 | 2#12, 1#12G | RECEPTS RM 215, 216 |
| HOT PLATE RM 208 | 2#12, 1#12G | 1/2 | 20 | 35 | 36 | 20 | 1/2 | 2#12, 1#12G | WEST RECEPTS RM 212 |
| CLASSROOM 1,2 CURTAINS | 2#12, 1#12G | 1/2 | 20 | 37 | 38 | 20 | 1/2 | 2#12, 1#12G | EAST RECEPTS RM 212 |
| CLASSROOM 3,4 CURTAINS | 2#12, 1#12G | 1/2 | 20 | 39 | 40 | 20 | 1/2 | 2#12, 1#12G | NORTH RECEPTS RM 212 |
| CLASSROOM CURTAIN CONTROL | 2#12, 1#12G | 1/2 | 20 | 41 | 42 | 20 | 1/2 | 2#12, 1#12G | STREETSCAPE RECEPTACLES |
| STREESCAPE RECEPTACLES NORTH | 2#12, 1#12G | 1/2 | 20 | 43 | 44 | 20 | 1/2 | 2#12, 1#12G | FACP TRAINING MALL CORRIDOR 202 |
| STREESCAPE RECEPTACLES SOUTH | 2#12, 1#12G | 1/2 | 20 | 45 | 46 | 20 | 1/2 | 2#12, 1#12G | STREETSCAPE RECEPTACLES SOUTH |
| RECEPT STAIR 7 | 2#12, 1#12G | 1/2 | 20 | 47 | 48 | 20 | 1/2 | 2#12, 1#12G | MOTORIZED COILING DOOR |
| REFRIGERATOR RM 149 | 2#12, 1#12G | 1/2 | 20 | 49 | 50 | 20 | 1/2 | 2#12, 1#12G | STREETSCAPE RECEPTACLES |
| REFRIGERATOR RM 140 | 2#12, 1#12G | 1/2 | 20 | 51 | 52 | 20 | 1/2 | 2#12, 1#12G | TV RECEPTACLE RM 119 |
| TV RECEPTACLE RM 149 | 2#12, 1#12G | 1/2 | 20 | 53 | 54 | 20 | 1/2 | 2#12, 1#12G | TV RECEPTACLE RM 120 |
| MOTORIZED CURTAIN RM 149 | 2#12, 1#12G | 1/2 | 20 | 55 | 56 | 20 | 1/2 | 2#12, 1#12G | MOTORIZED CURTAIN RM 140 |
| MOTORIZED CURTAIN RM 148 | 2#12, 1#12G | 1/2 | 20 | 57 | 58 | 20 | 1/2 | 2#12, 1#12G | MOTORIZED CURTAIN RM 123 |
| MOTORIZED CURTAIN RM 148 | 2#12, 1#12G | 1/2 | 20 | 59 | 60 | 20 | 1/2 | 2#12, 1#12G | MOTORIZED CURTAIN RM 122 |
| | | | | 61 | 62 | 20 | 1/2 | 2#12, 1#12G | KIOSK POKE THRU RM 202 |
| | | | | 63 | 64 | 20 | 1/2 | 2#12, 1#12G | KIOSK POKE THRU RM 202 |
| | | | | 65 | 66 | | | | |
| | | | | 67 | 68 | | | | |
| | | | | 69 | 70 | | | | |
| | | | | 71 | 72 | | | | |
| | | | | 73 | 74 | | | | |
| | | | | 75 | 76 | | | | |
| | | | | 77 | 78 | | | | |
| | | | | 79 | 80 | | | | |
| | | | | 81 | 82 | | | | |
| | | | | 83 | 84 | | | | |

## PANEL L-2 SCHEDULE

100 AMPS | 208/120 VOLTS | 3 PHASE | 4 WIRE | 42 POLE SPACES

MAIN BREAKER - AMPS | LUGS 100 AMPS | GROUND BAR CU | SC RATING 65 KAIC | ENCLOSURE NEMA 1

INSTALLATION SURFACE | LOCATION ELECTRICAL ROOM | PANEL FEEDER MDP-1 | NOTES

| DESCRIPTION | WIRE | CON | CB. AMPS | CIR# | CIR# | CB. AMPS | CON | WIRE | DESCRIPTION |
|---|---|---|---|---|---|---|---|---|---|
| LIGHTING RM 102, 103 | 2#12, 1#12G | 1/2 | 20 | 1 | 2 | 20 | 1/2 | 2#12, 1#12G | LIGHTING RM 107, 110 |
| LIGHTING RM 104, 105, 106 | 2#12, 1#12G | 1/2 | 20 | 3 | 4 | 20 | 1/2 | 2#12, 1#12G | LIGHTING RM 111 |
| LIGHTING RM 101, 101A, 108 | 2#12, 1#12G | 1/2 | 20 | 5 | 6 | 20 | 1/2 | 2#12, 1#12G | LIGHTING RM 109 |
| WALL PACKS | 2#12, 1#12G | 1/2 | 20 | 7 | 8 | 20 | 1/2 | 2#12, 1#12G | LIGHTING RM 100 |
| LIGHTING RM 201 | 2#12, 1#12G | 1/2 | 20 | 9 | 10 | 20 | | | SPARE |
| LIGHTING RM 200 | 2#12, 1#12G | 1/2 | 20 | 11 | 12 | 20 | | | SPARE |
| | | | | 13 | 14 | | | | |
| | | | | 15 | 16 | | | | |
| | | | | 17 | 18 | | | | |
| | | | | 19 | 20 | | | | |
| | | | | 21 | 22 | | | | |
| | | | | 23 | 24 | | | | |
| | | | | 25 | 26 | | | | |
| | | | | 27 | 28 | | | | |
| | | | | 29 | 30 | | | | |
| | | | | 31 | 32 | | | | |
| | | | | 33 | 34 | | | | |
| | | | | 35 | 36 | | | | |
| | | | | 37 | 38 | | | | |
| | | | | 39 | 40 | | | | |
| | | | | 41 | 42 | | | | |

## PANEL P-2 SCHEDULE

100 AMPS | 208/120 VOLTS | 3 PHASE | 4 WIRE | 42 POLE SPACES

MAIN BREAKER - AMPS | LUGS 100 AMPS | GROUND BAR CU | SC RATING 65 KAIC | ENCLOSURE NEMA 1

INSTALLATION SURFACE | LOCATION ELECTRICAL ROOM | PANEL FEEDER MDP-1 | NOTES

| DESCRIPTION | WIRE | CON | CB. AMPS | CIR# | CIR# | CB. AMPS | CON | WIRE | DESCRIPTION |
|---|---|---|---|---|---|---|---|---|---|
| WEST RECEPTS RM 100 | 2#12, 1#12G | 1/2 | 20 | 1 | 2 | 20 | 1/2 | 2#12, 1#12G | NORTH RECEPTS RM 109 |
| EAST RECEPTS RM 100 | 2#12, 1#12G | 1/2 | 20 | 3 | 4 | 20 | 1/2 | 2#12, 1#12G | SOUTH RECEPTS RM 109 |
| EAST RECEPTS RM 107 | 2#12, 1#12G | 1/2 | 20 | 5 | 6 | 20 | 1/2 | 2#12, 1#12G | NORTH RECEPTS RM 111 |
| WEST RECEPTS RM 110 | 2#12, 1#12G | 1/2 | 20 | 7 | 8 | 20 | 1/2 | 2#12, 1#12G | SOUTH RECEPTS RM 111 |
| EAST RECEPTS RM 110 | 2#12, 1#12G | 1/2 | 20 | 9 | 10 | 20 | 1/2 | 2#12, 1#12G | RECEPTS RM 102, 103 |
| RECEPTS RM 101, 105, 106, 108 | 2#12, 1#12G | 1/2 | 20 | 11 | 12 | 20 | 1/2 | 2#12, 1#12G | WEST RECEPTS RM 107 |
| RECEPTS RM 201 | 2#12, 1#12G | 1/2 | 20 | 13 | 14 | 20 | 1/2 | 2#12, 1#12G | SMARTBOARD RM 111 |
| RECEPTS RM 201 | 2#12, 1#12G | 1/2 | 20 | 15 | 16 | 20 | 1/2 | 2#12, 1#12G | DRINKING FOUNTAIN |
| RECEPTS RM 200 | 2#12, 1#12G | 1/2 | 20 | 17 | 18 | 20 | 1/2 | 2#12, 1#12G | POWER OVERHEAD DOOR RM 150 |
| POWER OVERHEAD DOOR RM 150 | 2#12, 1#12G | 1/2 | 20 | 19 | 20 | 20 | 1/2 | 2#12, 1#12G | FACP MAIN LOBBY 101 |
| POWER MAGNOMETER RM 129 | 2#12, 1#12G | 1/2 | 20 | 21 | 22 | 20 | | | SPARE |
| DEDICATED RECEPTACLE RM 100 | 2#12, 1#12G | 1/2 | 20 | 23 | 24 | 20 | 1/2 | 2#12, 1#12G | FLUSH VALVES RMS 105 & 106 |
| DEDICATED RECEPTACLE RM 129A | 2#12, 1#12G | 1/2 | 20 | 25 | 26 | 20 | 1/2 | 2#12, 1#12G | FLOOR BOXES RM 109 |
| DEDICATED RECEPTACLE RM 200 | 2#12, 1#12G | 1/2 | 20 | 27 | 28 | 20 | 1/2 | 2#12, 1#12G | FLOOR BOXES RM 109 |
| SPARE | | | 20 | 29 | 30 | 20 | 1/2 | 2#12, 1#12G | FLOOR BOXES RM 109 |
| SPARE | | | 20 | 31 | 32 | 20 | 1/2 | 2#12, 1#12G | FLOOR BOX RM 111 |
| SPARE | | | 20 | 33 | 34 | 20 | | | SPARE |
| SPARE | | | 20 | 35 | 36 | 20 | | | SPARE |
| SPARE | | | 20 | 37 | 38 | 20 | | | SPARE |
| SPACE | | | | 39 | 40 | | | | SPACE |
| SPACE | | | | 41 | 42 | | | | SPACE |

OGS
NYS OFFICE OF GENERAL SERVICES
Serving New York
ANDREW M. CUOMO
Governor
ROANN M. DESTITO
COMMISSIONER
JAMES M. DAVIES, A.I.A.
Deputy Commissioner, Design and Construction

CONSULTANT

C&S COMPANIES®

C&S Engineers, Inc.
499 Col. Eileen Collins Blvd.
Syracuse, New York 13212
Phone: 315-455-2000
Fax: 315-455-9667
www.cscos.com

WARNING:
THE ALTERATION OF THIS MATERIAL IN ANY WAY, UNLESS DONE UNDER THE DIRECTION OF A COMPARABLE PROFESSIONAL, I.E. ARCHITECT FOR AN ARCHITECT, ENGINEER FOR AN ENGINEER OR LANDSCAPE ARCHITECT FOR A LANDSCAPE ARCHITECT, IS A VIOLATION OF THE NEW YORK STATE EDUCATION LAW AND/OR REGULATIONS AND IS A CLASS 'A' MISDEMEANOR.

STATE OF NEW YORK · DOUGLAS J. OBRIST · 078022 · LICENSED PROFESSIONAL ENGINEER

CONTRACT:

TITLE: PROVIDE CITYSCAPE COMPLEX

LOCATION: STATE PREPAREDNESS TRAINING CENTER
5900 AIRPORT ROAD
ORISKANY, NY 13424

CLIENT: DIVISION OF HOMELAND SECURITY & EMERGENCY SERVICES

REVISED DRAWING 08/29/2012

| MARK | DATE | DESCRIPTION |
|---|---|---|
| 1 | 08/29/2012 | REVISED DRAWING |
| | 07/05/2012 | FINAL SUBMISSION |
| | 06/11/2012 | 100% SUBMISSION |

PROJECT NUMBER: 44014–E
DESIGNED BY: DJO
DRAWN BY: KLW
FIELD CHECK: XXXXX
APPROVED: XXXXX
SHEET TITLE: ELECTRICAL SCHEDULES
DRAWING NUMBER: E-601
SHEET OF

Aug 28,2012 – 1:32pm
F:\Project\190 – NYSOGS\190429034-cityscape\Design\CADD\Sheet Files\Electrical\2009\sheet files\190429034A_E-601.dwg
36x24 PLOT SHEET

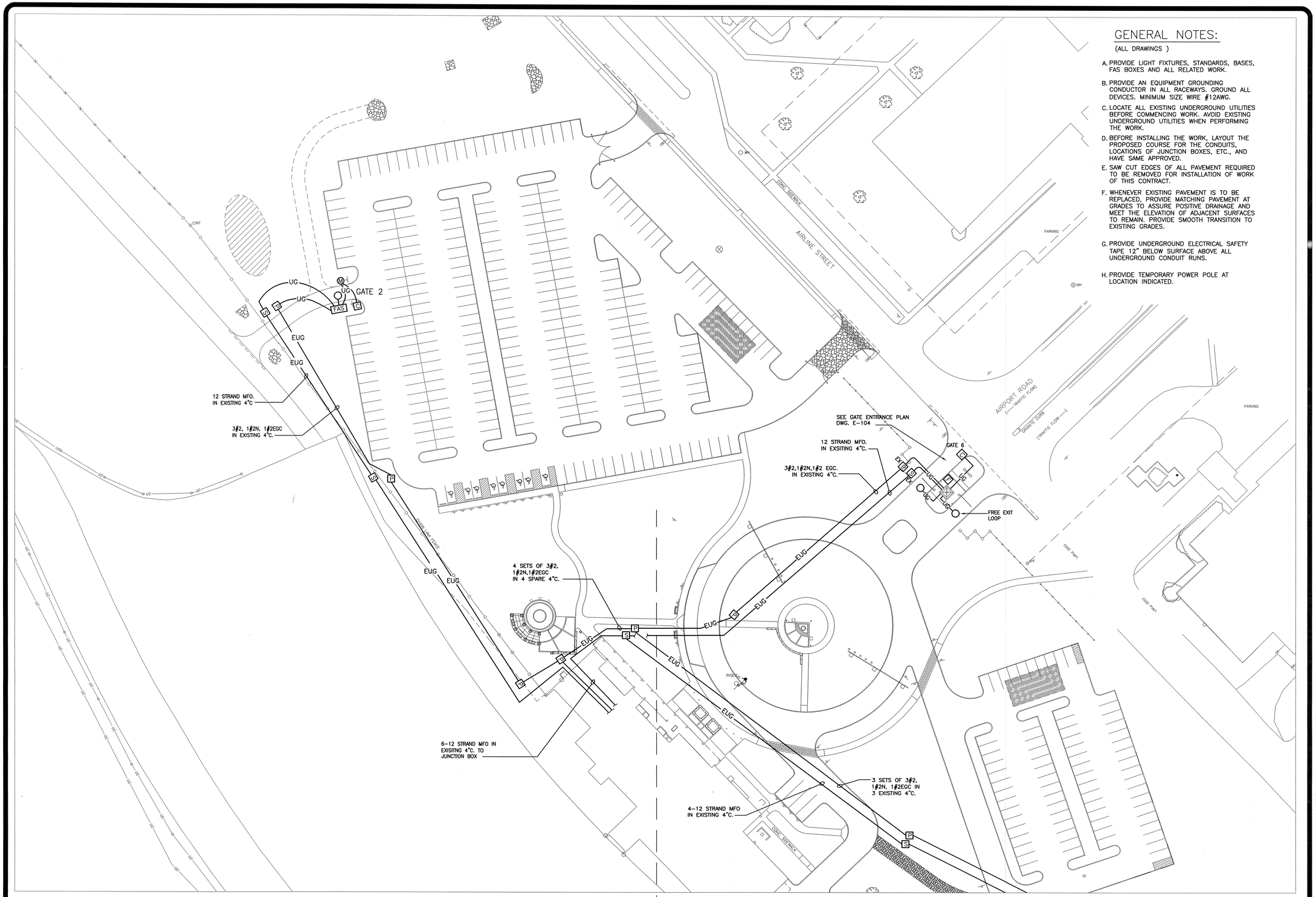


## PART SITE PLAN

SCALE: 1" = 40'

0 40 80

SCALE

## GENERAL NOTES:

(ALL DRAWINGS )

A. PROVIDE LIGHT FIXTURES, STANDARDS, BASES, FAS BOXES AND ALL RELATED WORK.

B. PROVIDE AN EQUIPMENT GROUNDING CONDUCTOR IN ALL RACEWAYS. GROUND ALL DEVICES. MINIMUM SIZE WIRE #12AWG.

C. LOCATE ALL EXISTING UNDERGROUND UTILITIES BEFORE COMMENCING WORK. AVOID EXISTING UNDERGROUND UTILITIES WHEN PERFORMING THE WORK.

D. BEFORE INSTALLING THE WORK, LAYOUT THE PROPOSED COURSE FOR THE CONDUITS, LOCATIONS OF JUNCTION BOXES, ETC., AND HAVE SAME APPROVED.

E. SAW CUT EDGES OF ALL PAVEMENT REQUIRED TO BE REMOVED FOR INSTALLATION OF WORK OF THIS CONTRACT.

F. WHENEVER EXISTING PAVEMENT IS TO BE REPLACED, PROVIDE MATCHING PAVEMENT AT GRADES TO ASSURE POSITIVE DRAINAGE AND MEET THE ELEVATION OF ADJACENT SURFACES TO REMAIN. PROVIDE SMOOTH TRANSITION TO EXISTING GRADES.

G. PROVIDE UNDERGROUND ELECTRICAL SAFETY TAPE 12" BELOW SURFACE ABOVE ALL UNDERGROUND CONDUIT RUNS.

H. PROVIDE TEMPORARY POWER POLE AT LOCATION INDICATED.

NYS OFFICE OF GENERAL SERVICES

*Serving New York*

ANDREW M. CUOMO
Governor
ROANN M. DESTITO
COMMISSIONER
JAMES M. DAVIES, A.I.A.
Deputy Commissioner, Design and Construction

WORK LOCATION

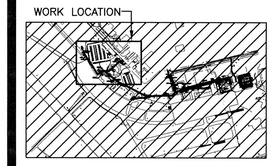

WARNING:

THE ALTERATION OF THIS MATERIAL IN ANY WAY, UNLESS DONE UNDER THE DIRECTION OF A COMPARABLE PROFESSIONAL, I.E. ARCHITECT FOR AN ARCHITECT, ENGINEER FOR AN ENGINEER OR LANDSCAPE ARCHITECT FOR A LANDSCAPE ARCHITECT, IS A VIOLATION OF THE NEW YORK STATE EDUCATION LAW AND/OR REGULATIONS AND IS A CLASS 'A' MISDEMEANOR.

STATE OF NEW YORK · RICHARD JAMES FULLER · 062936 · LICENSED PROFESSIONAL ENGINEER

CONTRACT:

ELECTRICAL

TITLE:

PROVIDE CITYSCAPE COMPLEX

LOCATION:

STATE PREPAREDNESS TRAINING CENTER
5900 AIRPORT ROAD
ORISKANY, NY 13424

CLIENT:

DIVISION OF HOMELAND SECURITY & EMERGENCY SERVICES

REVISED DRAWING
8-29-12

| MARK | DATE | DESCRIPTION |
|---|---|---|
| | 07/05/2012 | FINAL SUBMISSION |

| | |
|---|---|
| PROJECT NUMBER: | 44014-E |
| DESIGNED BY: | R.FULLER |
| DRAWN BY: | R.FULLER |
| FIELD CHECK: | |
| APPROVED: | |

SHEET TITLE:

PART SITE PLAN

DRAWING NUMBER:

ES-101

SHEET 1 OF 8

Aug 30,2012 - 1:35pm
y:\Designs\Contr\Q-Hdqs\44014\Cad\Elec\44014ES-101-4.dwg

36x24 PLOT SHEET

## GENERAL NOTES:

(THIS DRAWING ONLY)

A. GATE 6: PROVIDE CONDUIT AND WIRE FOR FIRE DEPARTMENT ACCESS SWITCH. CONNECT TO ACCESS CONTROL SYSTEM.

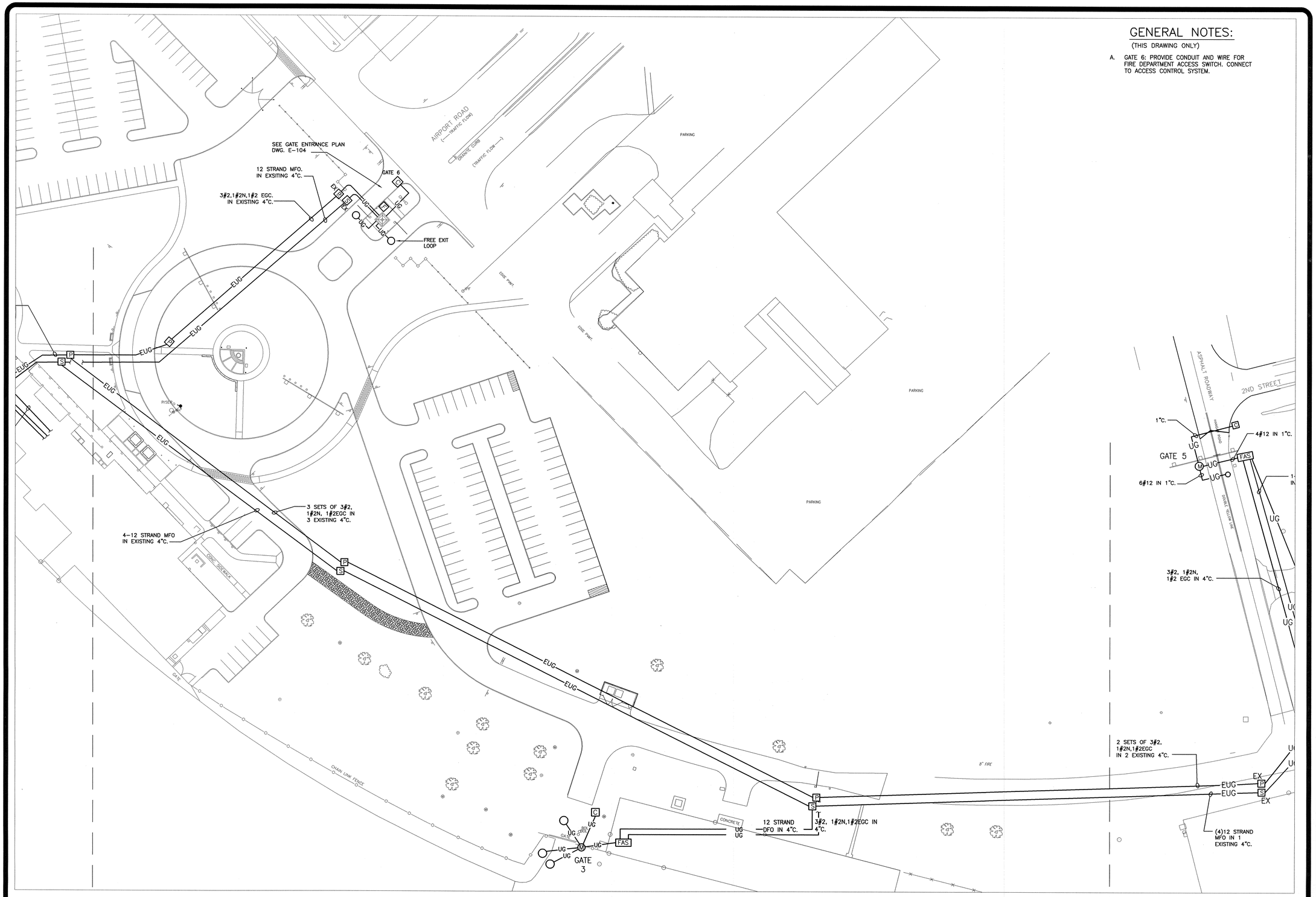





PART SITE PLAN
SCALE: 1" = 40'

0 40 80
SCALE

NYS OFFICE OF GENERAL SERVICES
*Serving New York*

ANDREW M. CUOMO
Governor
ROANN M. DESTITO
COMMISSIONER
JAMES M. DAVIES, A.I.A.
Deputy Commissioner, Design and Construction

WORK LOCATION

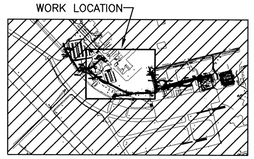

**WARNING:**

THE ALTERATION OF THIS MATERIAL IN ANY WAY, UNLESS DONE UNDER THE DIRECTION OF A COMPARABLE PROFESSIONAL, I.E. ARCHITECT FOR AN ARCHITECT, ENGINEER FOR AN ENGINEER OR LANDSCAPE ARCHITECT FOR A LANDSCAPE ARCHITECT, IS A VIOLATION OF THE NEW YORK STATE EDUCATION LAW AND/OR REGULATIONS AND IS A CLASS "A" MISDEMEANOR.

STATE OF NEW YORK · RICHARD JAMES FULLER · 082936 · LICENSED PROFESSIONAL ENGINEER

CONTRACT:
ELECTRICAL

TITLE:
PROVIDE CITYSCAPE COMPLEX

LOCATION:
STATE PREPAREDNESS TRAINING CENTER
5900 AIRPORT ROAD
ORISKANY, NY 13424

CLIENT:
DIVISION OF HOMELAND SECURITY & EMERGENCY SERVICES

REVISED DRAWING
8-29-12

| MARK | DATE | DESCRIPTION |
|---|---|---|
| | 07/05/2012 | FINAL SUBMISSION |

| | |
|---|---|
| PROJECT NUMBER: | 44014-E |
| DESIGNED BY: | R.FULLER |
| DRAWN BY: | R.FULLER |
| FIELD CHECK: | |
| APPROVED: | |

SHEET TITLE:
PART SITE PLAN

DRAWING NUMBER:
ES-102

SHEET 2 OF 8

Aug 30,2012 - 11:33am
V:\Designs\Const\94Dex\44014\CadElec\44014ES-101-4.dwg
36x24 PLOT SHEET

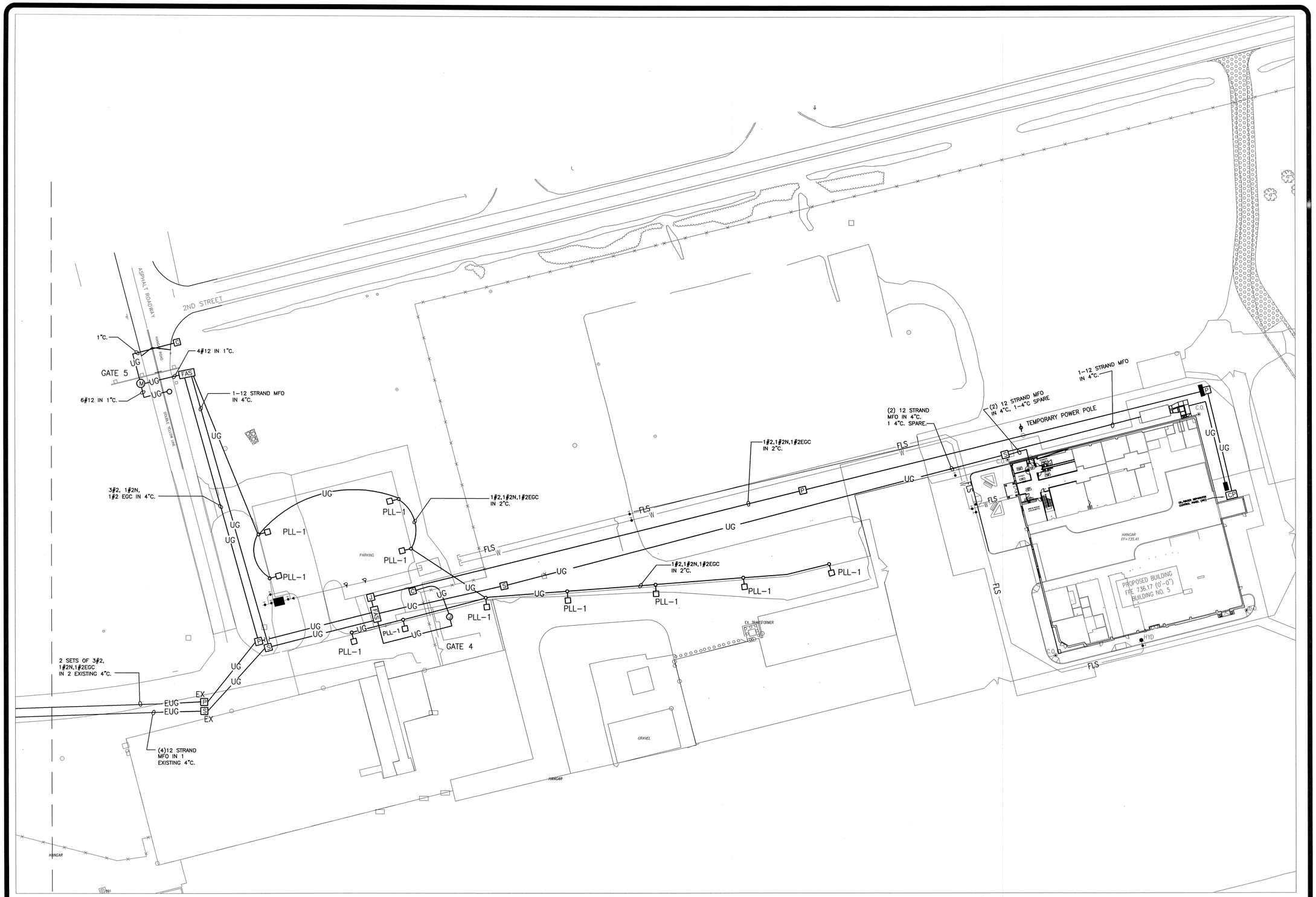


PART SITE PLAN

SCALE: 1" = 40'

0 40 80

SCALE

NYS OFFICE OF GENERAL SERVICES

*Serving New York*

ANDREW M. CUOMO
Governor
ROANN M. DESTITO
COMMISSIONER
JAMES M. DAVIES, A.I.A.
Deputy Commissioner, Design and Construction

WORK LOCATION

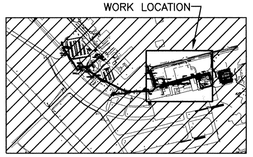

WARNING:

THE ALTERATION OF THIS MATERIAL IN ANY WAY, UNLESS DONE UNDER THE DIRECTION OF A COMPARABLE PROFESSIONAL, I.E. ARCHITECT FOR AN ARCHITECT, ENGINEER FOR AN ENGINEER OR LANDSCAPE ARCHITECT FOR A LANDSCAPE ARCHITECT, IS A VIOLATION OF THE NEW YORK STATE EDUCATION LAW AND/OR REGULATIONS AND IS A CLASS "A" MISDEMEANOR.

STATE OF NEW YORK · RICHARD JAMES FULLER · 052936 · LICENSED PROFESSIONAL ENGINEER

CONTRACT:
ELECTRICAL

TITLE:
PROVIDE CITYSCAPE COMPLEX

LOCATION:
STATE PREPAREDNESS TRAINING CENTER
5900 AIRPORT ROAD
ORISKANY, NY 13424

CLIENT:
DIVISION OF HOMELAND SECURITY & EMERGENCY SERVICES

REVISED DRAWING
8-29-12

| MARK | DATE | DESCRIPTION |
|---|---|---|
| | 07/05/2012 | FINAL SUBMISSION |

| | |
|---|---|
| PROJECT NUMBER: | 44014-E |
| DESIGNED BY: | R.FULLER |
| DRAWN BY: | R.FULLER |
| FIELD CHECK: | |
| APPROVED: | |

SHEET TITLE:
PART SITE PLAN

DRAWING NUMBER:
ES-103

SHEET 3 OF 8

Aug 30,2012 - 1:37pm
v:\Design\AndConstr\P40xx\44014\CadElec\44014ES-101-4.dwg
36x24 PLOT SHEET

## PANELBOARD SCHEDULE

| | | | | | | |
|---|---|---|---|---|---|---|
| DESIGNATION: GATES 1–5 | ☒ | FULLY RATED EQUIPMENT RATING IS REQUIRED FOR THIS PANELBOARD | PANELBOARD SHORT CIRCUIT RATING 22,000 RMS SYMMETRICAL AMPERES | | | |
| CABINET NEMA TYPE: 1 ☒ 3R ☐ 4 ☐ 4X ☐ 12 ☐ | ☐ | UL LISTED INTEGRATED EQUIPMENT SHORT CIRCUIT RATING IS ACCEPTABLE FOR THIS PANELBOARD | MAIN LUG ONLY ☐ | | | |
| | | | MAIN CIRCUIT BREAKER ☒ | | | |
| MOUNTING: SURFACE | ☒ | UL LABEL 'SUITABLE FOR USE AS SERVICE EQUIPMENT' | FRAME | POLES | ATE | COMPONENTS (SEE BELOW) |
| | | | 100 | 3 | 50 | – |

MAIN: 125
VOLTAGE: 120/208
PHASE: 3
NO. WIRES: 4
OTHER REQ: _____

FULL CAPACITY NEUTRAL BUS ☒
EQUIPMENT GROUNDING BUS ☒
SECONDARY SURGE ARRESTORS CATEGORY C ☒

BRANCH/FEEDER CIRCUIT BREAKERS

| DESCRIPTION | ATE | NO. | A B C | NO. | ATE | DESCRIPTION |
|---|---|---|---|---|---|---|
| GATE OPERATOR | 20 | 1 | | 2 | 20 | GATE CONTROLS |
| | | 3 | | 4 | 20 | PLL–1 FIXTURES (GATE 5) |
| | | 5 | | 6 | 20 | OIL/WATER SEPARATOR– GATE 4 |
| | | 7 | | 8 | | |
| | | 9 | | 10 | | |
| | | 11 | | 12 | | |
| | | 13 | | 14 | | |
| | | 15 | | 16 | | |
| | | 17 | | 18 | | |
| | | 19 | | 20 | | |
| | | 21 | | 22 | | |
| | | 23 | | 24 | | |
| | | 25 | | 26 | | |
| | | 27 | | 28 | | |
| | | 29 | | 30 | | |

## PANELBOARD SCHEDULE

| | | | | | | |
|---|---|---|---|---|---|---|
| DESIGNATION: PP–1A | ☒ | FULLY RATED EQUIPMENT RATING IS REQUIRED FOR THIS PANELBOARD | PANELBOARD SHORT CIRCUIT RATING 22,000 RMS SYMMETRICAL AMPERES | | | |
| CABINET NEMA TYPE: 1 ☒ 3R ☐ 4 ☐ 4X ☐ 12 ☐ | ☐ | UL LISTED INTEGRATED EQUIPMENT SHORT CIRCUIT RATING IS ACCEPTABLE FOR THIS PANELBOARD | MAIN LUG ONLY ☒ | | | |
| | | | MAIN CIRCUIT BREAKER ☐ | | | |
| MOUNTING: SURFACE | ☒ | UL LABEL 'SUITABLE FOR USE AS SERVICE EQUIPMENT' | FRAME | POLES | ATE | COMPONENTS (SEE BELOW) |
| | | | | | | – |

MAIN: 125
VOLTAGE: 120/208
PHASE: 3
NO. WIRES: 4
OTHER REQ: –

FULL CAPACITY NEUTRAL BUS ☒
EQUIPMENT GROUNDING BUS ☒
SECONDARY SURGE ARRESTORS CATEGORY C ☒

BRANCH/FEEDER CIRCUIT BREAKERS

| DESCRIPTION | ATE | NO. | A B C | NO. | ATE | DESCRIPTION |
|---|---|---|---|---|---|---|
| GATE 1 | 50 | 1 | | 2 | 50 | GATE 2 |
| | | 3 | | 4 | | |
| | | 5 | | 6 | | |
| GATE 3 | 50 | 7 | | 8 | 50 | GATE 4 |
| | | 9 | | 10 | | |
| | | 11 | | 12 | | |
| GATE 5 & SITE LIGHTING | 50 | 13 | | 14 | 20 | CARD ACCESS SYSTEM |
| | | 15 | | 16 | | |
| | | 17 | | 18 | | |
| | | 19 | | 20 | | |
| | | 21 | | 22 | | |
| | | 23 | | 24 | | |
| | | 25 | | 26 | | |
| | | 27 | | 28 | | |
| | | 29 | | 30 | | |

## SYMBOLS AND ABBREVIATIONS

| | |
|---|---|
| ——— | CONDUCTORS IN CONCEALED RACEWAY (IN CEILING OR WALLS) |
| —UG— | CONDUCTORS IN UNDERGROUND RACEWAY |
| —EUG— | EXISTING CONDUCTORS IN UNDERGROUND RACEWAY |
| – – – – | CONDUCTORS IN EXPOSED RACEWAY |
| P PPB–1 | POWER PULLBOX (MANHOLE) |
| FAS | FENCE ACCESSORY STATION (FAS) |
| M | GATE OPERATOR |
| ○ | FREE EXIT LOOP |
| PLL–1 | PARKING LOT LIGHTING |
| F | FIRE ACCESS SWITCH |
| P | POWER MANHOLE |
| S | SIGNAL MANHOLE |
| C | CARD READER |
| L | LIFT GATE |
| C | CONDUIT |
| EGC | EQUIPMENT GROUNDING CONDUCTOR |
| DFO | DUAL FIBER CABLE |
| ○ | FREE EXIT LOOP |
| | TEMPORARY POWER POLE |

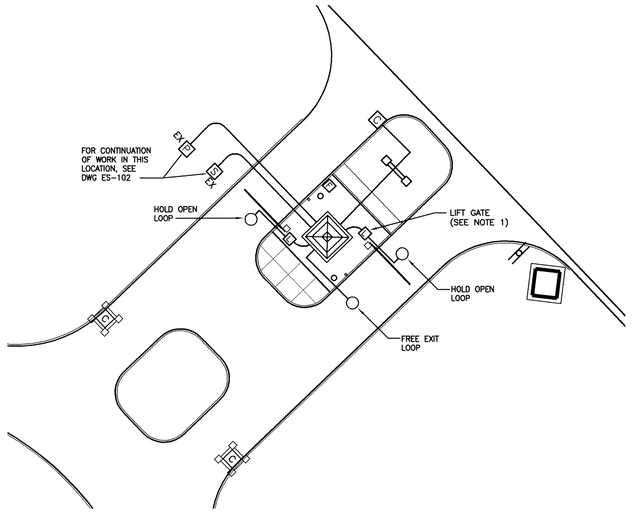


### GATE 6 ENTRANCE DETAIL
SCALE: 1" = 20'

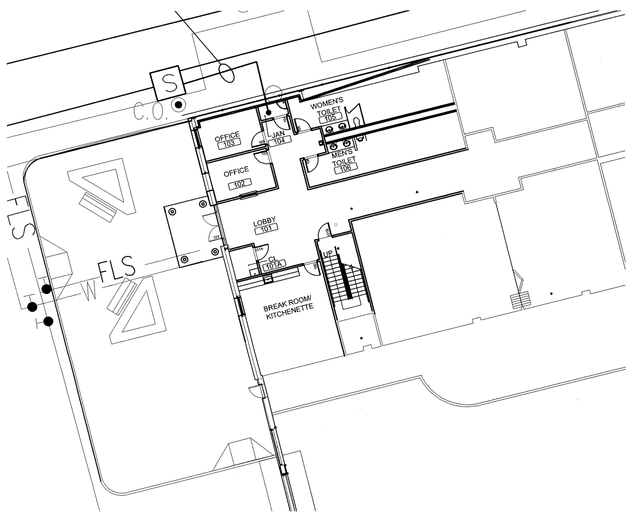


### PART FLOOR PLAN–BUILDING 5
SCALE: 1/16" =1'–0"

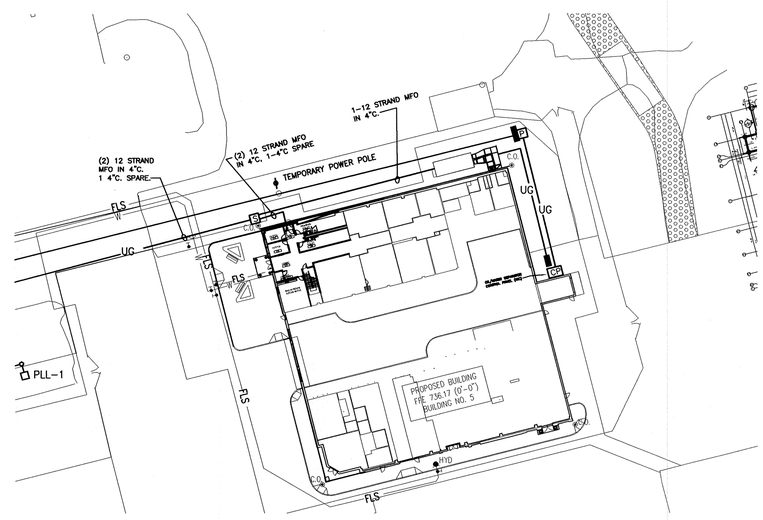


### TEMPORARY POWER
SCALE: 1" =50'

NYS OFFICE OF GENERAL SERVICES
*Serving New York*
ANDREW M. CUOMO
Governor
ROANN M. DESTITO
COMMISSIONER
JAMES M. DAVIES, A.I.A.
Deputy Commissioner, Design and Construction

**WARNING:**
THE ALTERATION OF THIS MATERIAL IN ANY WAY, UNLESS DONE UNDER THE DIRECTION OF A COMPARABLE PROFESSIONAL, I.E. ARCHITECT FOR AN ARCHITECT, ENGINEER FOR AN ENGINEER OR LANDSCAPE ARCHITECT FOR A LANDSCAPE ARCHITECT, IS A VIOLATION OF THE NEW YORK STATE EDUCATION LAW AND/OR REGULATIONS AND IS A CLASS "A" MISDEMEANOR.

STATE OF NEW YORK · RICHARD JAMES FULLER · 062936 · LICENSED PROFESSIONAL ENGINEER

CONTRACT:
ELECTRICAL

TITLE:
PROVIDE CITYSCAPE COMPLEX

LOCATION:
STATE PREPAREDNESS TRAINING CENTER
5900 AIRPORT ROAD
ORISKANY, NY 13424

CLIENT:
DIVISION OF HOMELAND SECURITY & EMERGENCY SERVICES

REVISED DRAWING
8–29–12

| MARK | DATE | DESCRIPTION |
|---|---|---|
| | 07/05/2012 | FINAL SUBMISSION |

| | |
|---|---|
| PROJECT NUMBER: | 44014– E |
| DESIGNED BY: | R.FULLER |
| DRAWN BY: | R.FULLER |
| FIELD CHECK: | |
| APPROVED: | |

SHEET TITLE:
PART SITE PLANS

DRAWING NUMBER:
ES–104

SHEET 4 OF 8

Aug 30,2012 – 1:38pm
V:\Designs\Constr\44014\CadDisc\44014ES–101–4.dwg
36x24 PLOT SHEET

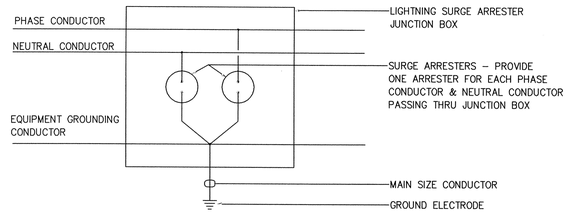


LIGHTNING SURGE ARRESTER CONNECTION DETAIL

NOT TO SCALE

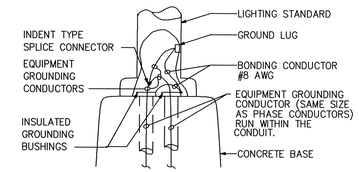


GROUNDING & BONDING DETAIL FOR LIGHTING STANDARD

NOT TO SCALE

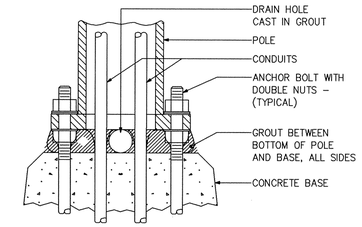


ENLARGED SECTION OF POLE AT CONCRETE BASE

NOT TO SCALE

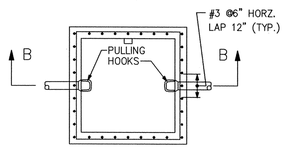


SECTION AA

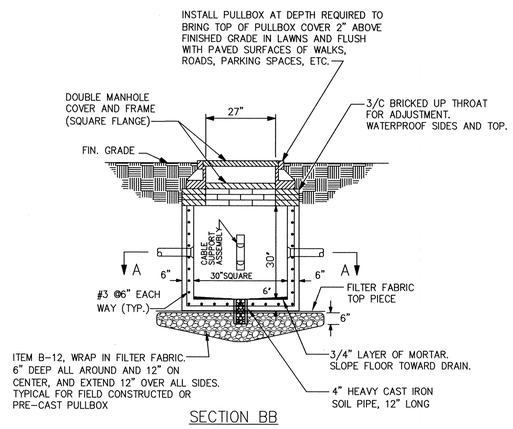


SECTION BB

PULLBOX DETAIL FIELD CONSTRUCTED

NOT TO SCALE

NUMBER, SIZE AND LOCATION OF CONDUITS AS REQUIRED.

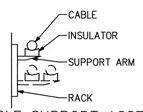


CABLE SUPPORT ASSEMBLY

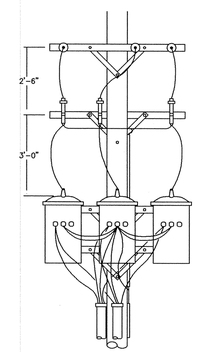


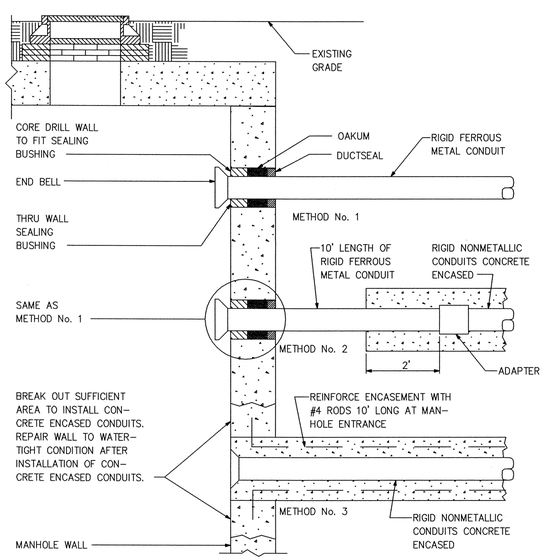


UNDERGROUND CONDUITS ENTERING EXISTING MANHOLE WALL

NOT TO SCALE

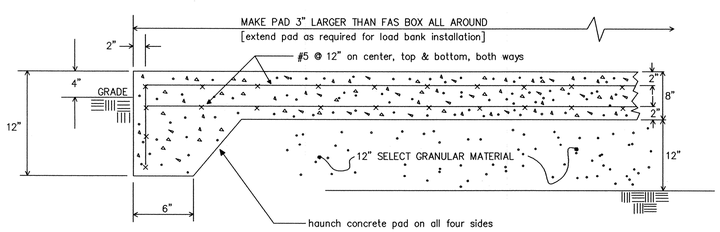


CONCRETE PAD DETAIL

NOT TO SCALE

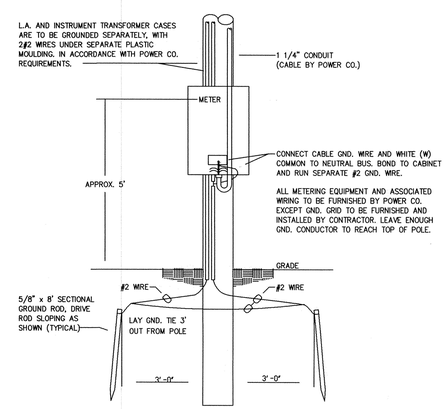


TEMPORARY POWER DETAIL – BUILDING NO. 5

NOT TO SCALE

NYS OFFICE OF GENERAL SERVICES

*Serving New York*

ANDREW M. CUOMO
Governor
ROANN M. DESTITO
COMMISSIONER
JAMES M. DAVIES, A.I.A.
Deputy Commissioner, Design and Construction

WARNING:

THE ALTERATION OF THIS MATERIAL IN ANY WAY, UNLESS DONE UNDER THE DIRECTION OF A COMPARABLE PROFESSIONAL, I.E. ARCHITECT FOR AN ARCHITECT, ENGINEER FOR AN ENGINEER OR LANDSCAPE ARCHITECT FOR A LANDSCAPE ARCHITECT, IS A VIOLATION OF THE NEW YORK STATE EDUCATION LAW AND/OR REGULATIONS AND IS A CLASS "A" MISDEMEANOR.

STATE OF NEW YORK · RICHARD JAMES KOLBER · 062936 · LICENSED PROFESSIONAL ENGINEER

CONTRACT:
ELECTRICAL

TITLE:
PROVIDE CITYSCAPE COMPLEX

LOCATION:
STATE PREPAREDNESS TRAINING CENTER
5900 AIRPORT ROAD
ORISKANY, NY 13424

CLIENT:
DIVISION OF HOMELAND SECURITY & EMERGENCY SERVICES

REVISED DRAWING
8-29-12

| MARK | DATE | DESCRIPTION |
|---|---|---|
| | 07/05/2012 | FINAL SUBMISSION |

| | |
|---|---|
| PROJECT NUMBER: | 44014-E |
| DESIGNED BY: | R.FULLER |
| DRAWN BY: | R.FULLER |
| FIELD CHECK: | |
| APPROVED: | |

SHEET TITLE:
DETAILS

DRAWING NUMBER:
ES-501

SHEET 7 OF 8

Aug 30,2012 - 1:11pm
V:\DesignArcCoat\P440xx\44014\CadElec\44014ES-501-2.dwg

36x24 PLOT SHEET

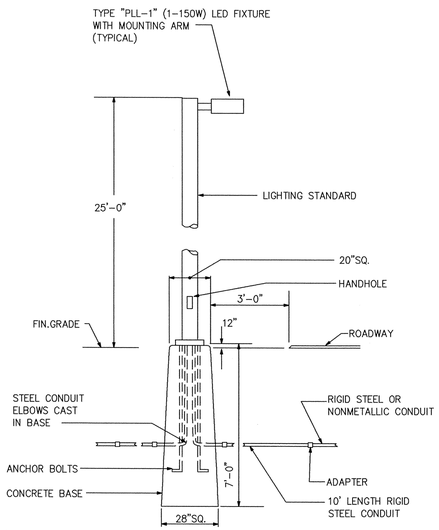


## LIGHTING STANDARD DETAIL A-3

NOT TO SCALE

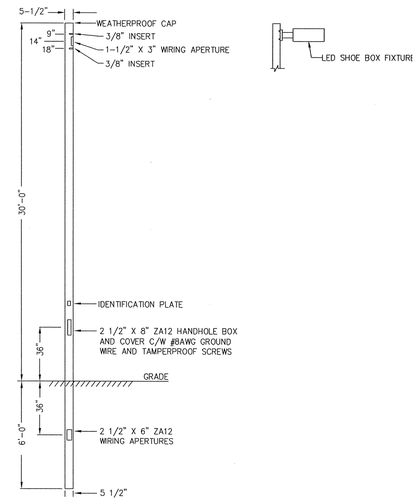


## POLE/BASE UNIT AND FIXTURE MOUNTING DETAIL

NOT TO SCALE

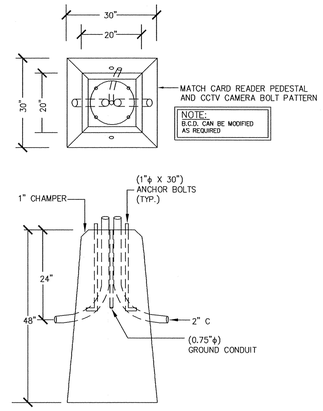


## SQUARE PYRAMID POLE BASE DETAIL

NOT TO SCALE

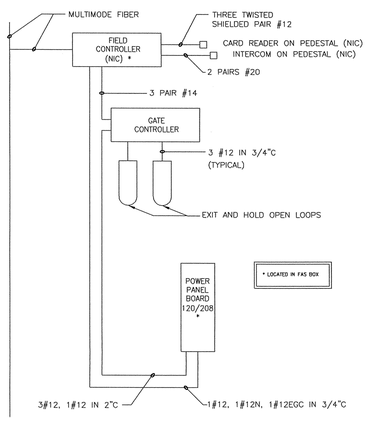


NOTE:
ALL WIRING TO PERIPHERALS NOT IN FAS BOX TO BE RUN UNDERGROUND IN CONDUIT.

## ACCESS CONTROL WIRING DIAGRAM

NOT TO SCALE

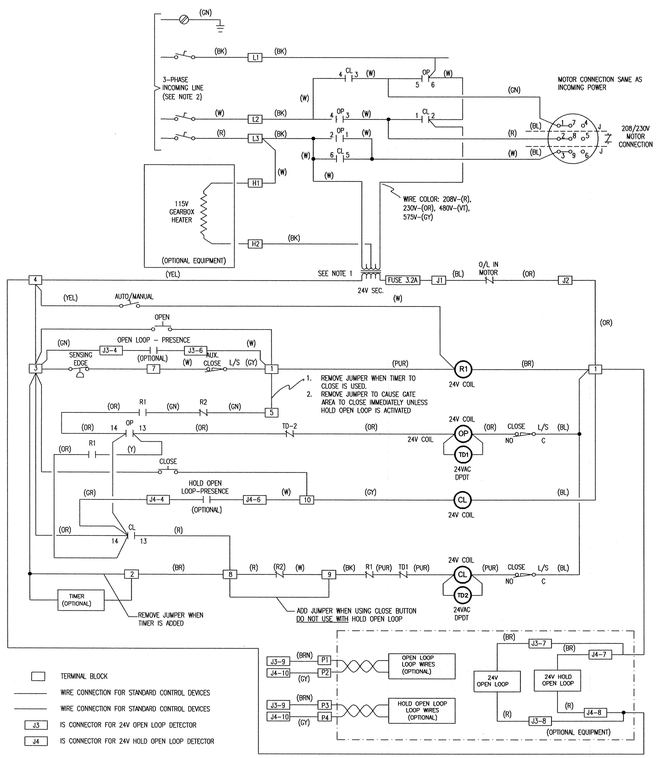


NOTES:
1. TRANSFORMER PRIMARY VOLTAGE SAME AS OPERATOR LINE VOLTAGE 24V SECONDARY
2. WE RECOMMEND USING A DEDICATED CIRCUIT BREAKER FOR EACH OPERATION

## GATE OPERATOR SYSTEM DIAGRAM – LIFT GATE

NOT TO SCALE

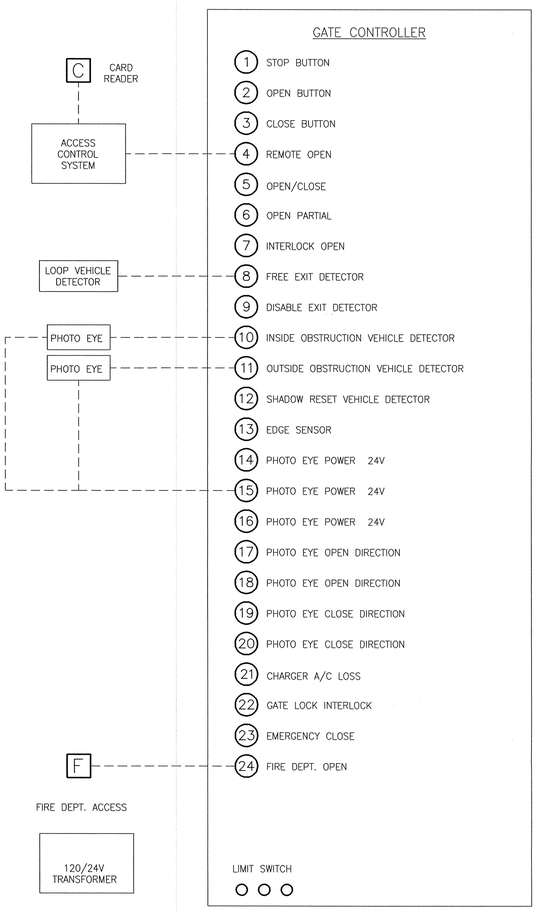


## GATE OPERATOR SYSTEM – SLIDING GATE

NOT TO SCALE

NYS OFFICE OF GENERAL SERVICES

*Serving New York*

ANDREW M. CUOMO
Governor
ROANN M. DESTITO
COMMISSIONER
JAMES M. DAVIES, A.I.A.
Deputy Commissioner, Design and Construction

WARNING:
THE ALTERATION OF THIS MATERIAL IN ANY WAY, UNLESS DONE UNDER THE DIRECTION OF A COMPARABLE PROFESSIONAL, I.E. ARCHITECT FOR AN ARCHITECT, ENGINEER FOR AN ENGINEER OR LANDSCAPE ARCHITECT FOR A LANDSCAPE ARCHITECT, IS A VIOLATION OF THE NEW YORK STATE EDUCATION LAW AND/OR REGULATIONS AND IS A CLASS "A" MISDEMEANOR.

STATE OF NEW YORK · RICHARD JAMES FULLER · 062936 · LICENSED PROFESSIONAL ENGINEER

CONTRACT:
ELECTRICAL

TITLE:
PROVIDE CITYSCAPE COMPLEX

LOCATION:
STATE PREPAREDNESS TRAINING CENTER
5900 AIRPORT ROAD
ORISKANY, NY 13424

CLIENT:
DIVISION OF HOMELAND SECURITY & EMERGENCY SERVICES

REVISED DRAWING
8-29-12

| MARK | DATE | DESCRIPTION |
|---|---|---|
| | 07/05/2012 | FINAL SUBMISSION |

| | |
|---|---|
| PROJECT NUMBER: | 44014-E |
| DESIGNED BY: | R.FULLER |
| DRAWN BY: | R.FULLER |
| FIELD CHECK: | |
| APPROVED: | |

SHEET TITLE:
DETAILS

DRAWING NUMBER:
ES-502

SHEET 8 OF 8

Aug 30,2012 - 1:50pm
V:\Design\Const\P440xx\44014\CadElec\44014ES-501-2.dwg
36x24 PLOT SHEET

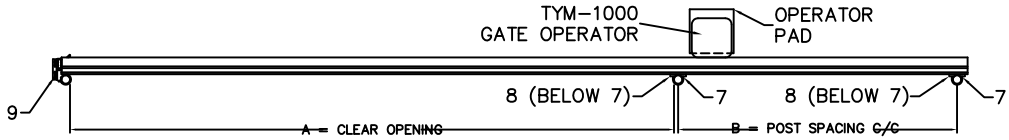


PLAN VIEW
Scale: None

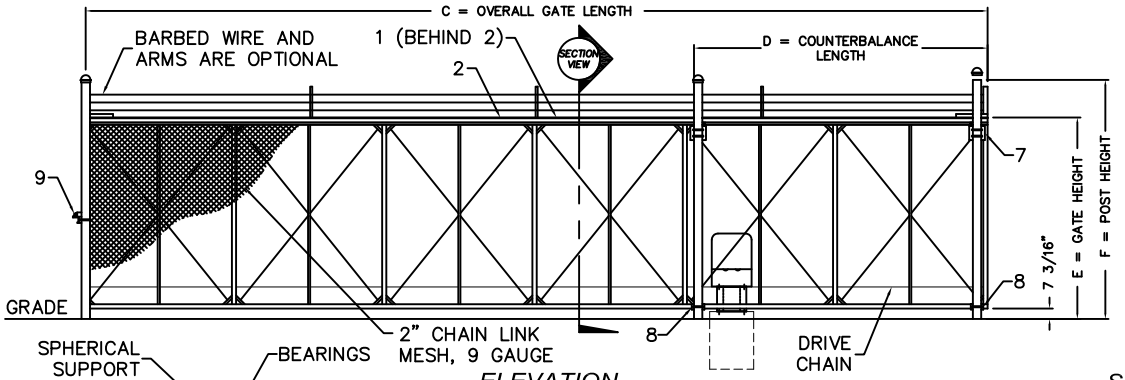


ELEVATION
Scale: None

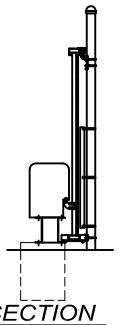

SECTION
Scale: None

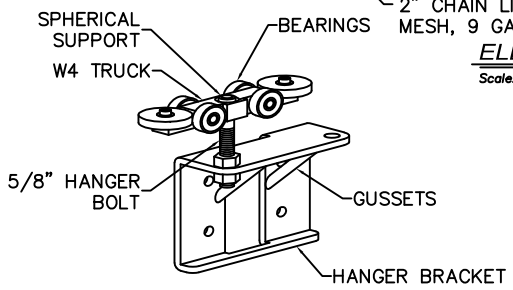


7 GATE HANGER ASSEMBLY
Scale: None

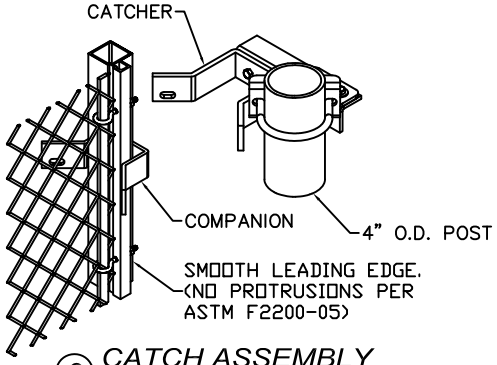


9 CATCH ASSEMBLY
Scale: None

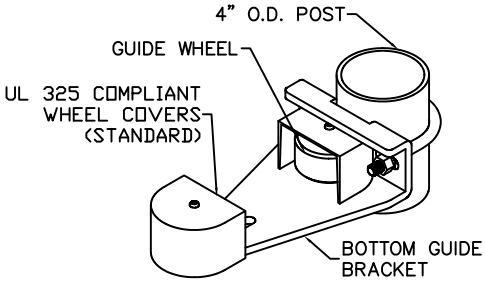


8 BOTTOM GUIDE
Scale: None

| CRITICAL DIMENSION CHART | | | |
|---|---|---|---|
| MARK | DESCRIPTION | FORMULA | DIM. |
| A | CLEAR OPENING | A | 20'-0" |
| B | COUNTERBALANCE POST SPACING C/C | (A/2)-11" | 9'-1" |
| C | OVERALL GATE LENGTH | A x 1.5 | 30'-0" |
| D | COUNTERBALANCE LENGTH | A x 0.5 | 10'-0" |
| E | NOMINAL GATE HEIGHT | E | 8'-0" |
| F | POST HEIGHT (W BARB ARMS) | E + 1'-6" | 9'-6" |
| G | FABRIC HEIGHT | E - 1'-0" | 7'-0" |

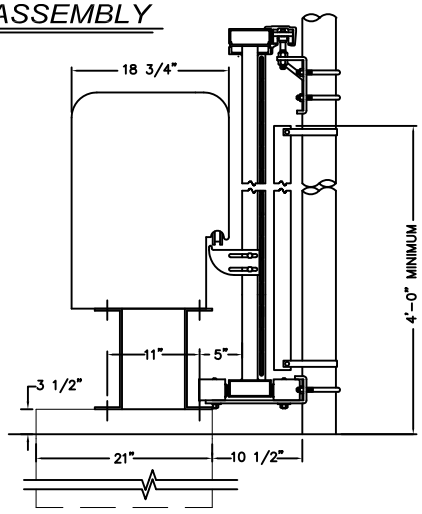


ENLARGED SECTION
Scale: None

ADDENDUM DRAWING 8/29/2012

NYS OFFICE OF GENERAL SERVICES
Serving New York

| | |
|---|---|
| CONTRACT: | CONSTRUCTION |
| PROJ. NO: | 44014 |
| DATE: | 8/29/2012 |
| DRAWN: | D. MILLER |
| APPROVED: | – |

SHEET TITLE: SLIDE GATE WITH OPERATOR

PROJECT: PROVIDE CITY SCAPE COMPLEX

WARNING: THE ALTERATION OF THIS MATERIAL IN ANY WAY, UNLESS DONE UNDER THE DIRECTION OF A COMPARABLE PROFESSIONAL, I.E. ARCHITECT FOR AN ARCHITECT, ENGINEER FOR AN ENGINEER OR LANDSCAPE ARCHITECT FOR A LANDSCAPE ARCHITECT, IS A VIOLATION OF THE NEW YORK STATE EDUCATION LAW AND/OR REGULATIONS AND IS A CLASS 'A' MISDEMEANOR.

DWG NO: L-003

8.5x11 PLOT SHEET

# SCHEDULE OF STRUCTURAL SPECIAL INSPECTIONS

THE FOLLOWING TABLES COMPRISE THE STRUCTURAL SPECIAL INSPECTION REQUIREMENTS FOR THIS PROJECT IN ACCORDANCE WITH CHAPTER 17 OF THE BUILDING CODE OF NEW YORK STATE. REFER TO THE PROJECT SPECIFICATIONS FOR REQUIRED QUALIFICATIONS OF ALL PERSONNEL PERFORMING SPECIAL INSPECTION ACTIVITIES AND ADDITIONAL TESTING INFORMATION.

EARTHWORK - REQUIREMENTS FOR SPECIAL INSPECTION & TESTING

| AREAS OF INSPECTION & TESTING | FREQUENCY OF INSPECTION OR TESTING | | REFERENCE STANDARD | BCNYS REFERENCE |
|---|---|---|---|---|
| | CONTINUOUS | PERIODIC | | |
| 1. PRIOR TO PLACEMENT OF ENGINEERED OR ON- SITE FILL MATERIAL, CONFIRM THAT SUBGRADE HAS BEEN PREPARED IN ACCORDANCE WITH THE REQUIREMENTS OF THE PROJECT GEOTECHNICAL ENGINEER. | | X | | 1704.7.1 |
| 2. DURING PLACEMENT AND COMPACTION OF FILL MATERIAL, VERIFY THAT THE MATERIAL AND ITS METHOD OF PLACEMENT AND COMPACTION CONFORM TO THE REQUIREMENTS OF BOTH THE PROJECT GEOTECHNICAL ENGINEER AND THE CONTRACT DOCUMENTS. | | X | | 1704.7.2 |
| 3. CONFIRM THAT THE FINAL IN-PLACE DENSITY OF THE FILL MATERIAL MEETS THE REQUIREMENTS OF THE PROJECT GEOTECHNICAL ENGINEER AND THE CONTRACT DOCUMENTS. | | X | | 1704.7.3 |
| 4. INSPECT FOUNDATION BEARING STRATA PRIOR TO PLACING CONCRETE FOR CONFORMANCE TO REQUIREMENTS OF PROJECT GEOTECHNICAL ENGINEER. | X | | | |
| 5. VERIFY THAT UNDERSLAB GRANULAR FILL AND ITS METHOD OF PLACEMENT CONFORM TO THE REQUIREMENTS OF THE PROJECT GEOTECHNICAL ENGINEER AND THE CONTRACT DOCUMENTS. | | X | | |

CAST-IN-PLACE AND PRECAST CONCRETE - REQUIREMENTS FOR SPECIAL INSPECTION & TESTING

| AREAS OF INSPECTION & TESTING | FREQUENCY OF INSPECTION OR TESTING | | REFERENCE STANDARD | BCNYS REFERENCE |
|---|---|---|---|---|
| | CONTINUOUS | PERIODIC | | |
| 1. INSPECT REINFORCING STEEL FOR CORRECT MATERIAL, SIZE, CONDITION AND PLACEMENT. | | X | ACI 318: 3.5<br>ACI 318: 7.1-7.7 | 1903.5, 1907.1, 1907.7, 1914.4 |
| 2. INSPECT REINFORCING STEEL WELDING IN ACCORDANCE WITH BCNYS TABLE 1704.3, ITEM 5B. | | X | AWS D1.4<br>ACI 318: 3.5.2 | 1903.5.2 |
| 3. PRIOR TO AND DURING PLACEMENT OF CONCRETE, INSPECT BOLTS AND ANCHOR RODS INSTALLED IN CONCRETE FOR PROPER LOCATION AND DEPTH OF EMBEDMENT. | X | | | 1912.5 |
| 4. VERIFY THAT REQUIRED CONCRETE DESIGN MIX IS USED IN CORRECT LOCATIONS. | | X | ACI 318: CH. 4<br>ACI 318: 5.2-5.4 | 1904, 1905.2, 1905.3, 1905.4, 1914.2, 1914.3 |
| 5. TAKE SAMPLES OF FRESH CONCRETE TO PERFORM SLUMP TESTS AND MEASURE AIR CONTENT AND TEMPERATURE OF THE CONCRETE BEING PLACED. MAKE TEST CYLINDERS FOR STRENGTH TESTS. | X | | ASTM C172<br>ASTM C31<br>ACI 318: 5.6, 5.8 | 1905.6,<br>1914.10 |
| 6. VERIFY PROPER INSTALLATION TECHNIQUES FOR CONCRETE VERIFY PROPER ERECTION OF PRECAST CONCRETE MEMBERS | X | X | ACI 318: 5.9, 5.10<br>ACI 318: CH. 16 | 1905.9, 1905.10, 1914.6, 1914.7, 1914.8 |
| 7. INSPECT FOR MAINTENANCE OF SPECIFIED CURING TEMPERATURE AND TECHNIQUES. | | X | ACI 318: 5.11-5.13 | 1905.11, 1905.13, 1914.9 |
| 8. VERIFY CONCRETE STRENGTH BY TESTING CYLINDERS CONSTRUCTED OF FRESHLY PLACED CONCRETE. | | X | | |
| 9. ERECTION OF PRECAST CONCRETE MEMBERS AND DETAILS. | | X | ACI 318: CH. 16 | |

STEEL CONSTRUCTION - REQUIREMENTS FOR SPECIAL INSPECTION & TESTING

| AREAS OF INSPECTION & TESTING | FREQUENCY OF INSPECTION OR TESTING | | REFERENCE STANDARD | BCNYS REFERENCE |
|---|---|---|---|---|
| | CONTINUOUS | PERIODIC | | |
| 1. FABRICATOR'S SHOP TESTING AND QUALITY CONTROL PROGRAM:<br>A. VERIFY FABRICATOR'S CERTIFICATION AND QUALITY CONTROL PROGRAM.<br>B. SPECIAL INSPECTIONS REQUIRED IN FABRICATOR'S SHOP FOR ELEMENTS IDENTIFIED BELOW. | NOT REQ'D. IF FABRICATOR IS AISC CERTIFIED | X | AISC PLANT CERTIFICATION PROGRAM | 1704.2 |
| 2. REVIEW MATERIAL CERTIFICATIONS FOR HIGH-STRENGTH BOLTS, NUTS AND WASHERS:<br>A. IDENTIFICATION MARKINGS TO CONFORM TO ASTM STANDARDS SPECIFIED IN CONSTRUCTION DOCUMENTS.<br>B. MANUFACTURER'S CERTIFICATES OF COMPLIANCE REQUIRED. | | X | APPLICABLE ASTM MATERIAL SPECIFICATIONS, AISC SECT. A3.3 | |
| 3. INSPECT HIGH-STRENGTH BOLTED CONNECTIONS:<br>A. BEARING-TYPE CONNECTIONS.<br>B. SLIP-CRITICAL CONNECTIONS. | X<br>X | <br>X | AISC SECT. M2.5 | 1704.3.3 |
| 4. VERIFY STRUCTURAL STEEL MATERIAL CERTIFICATIONS:<br>A. IDENTIFICATION MARKINGS TO CONFORM TO ASTM STANDARDS SPECIFIED IN CONSTRUCTION DOCUMENTS.<br>B. MANUFACTURER'S CERTIFIED MILL TEST REPORTS REQUIRED. | | | ASTM A6<br>ASTM A6 | 1708.4 |
| 5. VERIFY WELD FILLER MATERIAL CERTIFICATIONS:<br>A. IDENTIFICATION MARKINGS TO CONFORM TO AWS REQUIREMENTS SPECIFIED IN THE CONSTRUCTION DOCUMENTS.<br>B. MANUFACTURER'S CERTIFICATES OF COMPLIANCE REQUIRED. | | | AISC SECT. A3.5 | |
| 6. CONDUCT WELD INSPECTIONS AS FOLLOWS:<br>A. STRUCTURAL STEEL (GENERAL):<br>1) COMPLETE AND PARTIAL PENETRATION GROOVE WELDS.<br>2) MULTI-PASS FILLET WELDS.<br>3) SINGLE-PASS FILLET WELDS > 5/16*<br>4) SINGLE-PASS FILLET WELDS <= 5/16*<br>5) FLOOR DECK AND ROOF DECK WELDS. | <br><br>X<br>X<br>X | <br><br><br><br>X<br>X | AWS D1.1<br><br><br><br><br>AWS D1.3 | 1704.3.1 |
| 7. INSPECT STEEL FRAME JOINT DETAILS FOR COMPLIANCE WITH CONSTRUCTION DOCUMENTS:<br>A. DETAILS SUCH AS BRACING AND STIFFENERS.<br>B. MEMBER LOCATIONS.<br>C. APPLICATION OF JOINT DETAILS AT EACH CONNECTION. | | X | | 1704.3.2 |

# STRUCTURAL NOTES

**GENERAL NOTES:**

1) SPECIFICATIONS: REFER TO THE PROJECT SPECIFICATIONS FOR DETAILED REQUIREMENTS FOR MATERIAL AND WORKMANSHIP.

2) BUILDING CODE: BUILDING CODE OF NEW YORK STATE, 2010

3) CONSTRUCTION LOADING: DURING CONSTRUCTION, THE CONTRACTOR SHALL LIMIT AND CONTROL CONSTRUCTION LOADING, INCLUDING BUT NOT LIMITED TO: MATERIAL STOCKPILING AND CONSTRUCTION EQUIPMENT TO PRECLUDE OVERSTRESSING, EXCESSIVE CONSTRUCTION LIVE LOAD, OR DAMAGE TO ANY STRUCTURAL ELEMENT.

4) COORDINATION WITH OTHER DISCIPLINES: THE CONTRACTOR SHALL COORDINATE ALL STRUCTURAL WORK WITH THE ARCHITECTURAL, ELECTRICAL AND MECHANICAL DRAWINGS AND SPECIFICATIONS.

5) EXISTING CONDITIONS: THE INFORMATION SHOWN ON THESE DOCUMENTS IS THE BEST REPRESENTATION OF EXISTING CONDITIONS AVAILABLE TO THE ENGINEER. IT IS THE CONTRACTOR'S RESPONSIBILITY TO FIELD VERIFY AND BRING TO THE ATTENTION OF THE ENGINEER IN CHARGE ANY ISSUES, DISCREPANCIES, OR CONCERNS PRIOR TO COMMENCING WORK.

6) EXISTING STRUCTURES: ALL EXISTING STRUCTURES ADJACENT TO NEW WORK ARE TO BE ADEQUATELY PROTECTED AND/OR SUPPORTED DURING CONSTRUCTION. THE CONTRACTOR SHALL BE RESPONSIBLE FOR REPAIRING ANY NEW OR EXISTING CONSTRUCTION DAMAGED WHILE WORK IS IN PROGRESS.

7) OPENINGS: THE CONTRACTOR SHALL BE RESPONSIBLE FOR COORDINATING SIZE AND LOCATION OF ALL OPENINGS IN NEW CONSTRUCTION WITH THE DISCIPLINE REQUIRING THEM.

**DESIGN CRITERIA:**

1) RAPPEL POINTS: RAPPEL ATTACHMENT POINTS SHALL BE DESIGNED TO RESIST A LOAD OF 5,000 LBS IN ANY DIRECTION.

2) LIVE LOAD:
SECOND FLOOR OCCUPANCY: ....50 PSF
SECOND FLOOR PARTITION: ....15 PSF
CATWALK: ....40 PSF
STAIRS: ....100 PSF

1

3) DEAD LOADS: ALL PERMANENT STATIONARY CONSTRUCTION.
ROOF COLLATERAL LOAD: ....5 PSF
CATWALK STEEL GRATING: ....25 PSF
MEZZANINE: ....61 PSF
STAIRS: ....30 PSF

1

4) SNOW LOAD:
GROUND SNOW ($P_g$): ....60 PSF
UNIFORM FLAT ROOF ($P_f$): ....37.8 PSF
EXPOSURE FACTOR ($C_e$): ....0.9
THERMAL FACTOR ($C_t$): ....1.0
IMPORTANCE FACTOR ($I_s$): ....1.0
DRIFT LOAD: ....(SEE DWG S-002 AND ASCE 7)

5) MECHANICAL LOADS: RTU: ....COORDINATE WITH MECHANICAL CONTRACTOR FOR FINAL SIZE, WEIGHT, CONFIGURATION, AND LOCATION.

6) SEISMIC:
IMPORTANCE FACTOR ($I_E$): ....1.0
SITE CLASS: ....D
SHORT-PERIOD MAPPED MCE SPECTRAL RESPONSE ACCELERATION ($S_S$): ....0.170g
ONE-SECOND MAPPED MCE SPECTRAL RESPONSE ACCELERATION ($S_1$): ....0.059g
SHORT-PERIOD DESIGN ACCELERATION ($S_{DS}$): ....0.181g
ONE-SECOND DESIGN ACCERATION ($S_{D1}$): ....0.094g
SEISMIC DESIGN CATEGORY: ....B
SEISMIC-FORCE-RESISTING SYSTEM ....PER PEMB SUPPLIER
MODIFICATION FACTOR (R): ....PER PEMB SUPPLIER
SEISMIC RESPONSE COEFFICIENT ($C_S$): ....PER PEMB SUPPLIER
DESIGN BASE SHEAR: ....PER PEMB SUPPLIER
ANALYSIS PROCEDURE: ....PER PEMB SUPPLIER

7) WIND LOADS:
BASIC WIND SPEED (V): ....90 MPH
IMPORTANCE FACTOR ($I_w$): ....1.0
EXPOSURE CATEGORY: ....C
INTERNAL PRESSURE COEFFICIENT ....+/-0.55
MWFRS: ....PER PEMB SUPPLIER
NET UPLIFT ON ROOFS: ....PER PEMB SUPPLIER

1

8) FOLDING PARTITIONS: SUPPORTS SHALL BE DESIGNED FOR A LOAD OF 110 PLF WITH A 5 KIP LIVE POINT LOAD AT MID-SPAN AND DEFLECTION CRITERIA IN ACCORDANCE WITH ASTM E557.

9) BREACHING DOORS: ALL STRUCTURE ADJACENT TO BREACHING DOORS SHALL BE DESIGNED FOR AN IMPACT LOAD OF 2,600 LB.

**FOUNDATION NOTES:**

1. THE FOUNDATION DESIGN FOR THIS STRUCTURE IS BASED ON THE RECOMMENDATIONS INCLUDED IN A GEOTECHNICAL REPORT BY RAVI ENGINEERING & LAND SURVEYING , P.C., DATED MARCH, 2012. ALLOWABLE SOIL BEARING PRESSURE = 2000 PSF. ALLOWABLE ROCK BEARING PRESSURE = 20,000 PSF. ALL EARTHWORK AND FOUNDATION PREPARATION WORK SHALL BE COMPLETED IN ACCORDANCE WITH THE RECOMMENDATIONS OF THIS REPORT.
2. FROST WALLS SHALL BEAR ON SOUND, NATIVE SOIL OR SELECT IMPORTED STRUCTURAL FILL. ALLOWABLE BEARING PRESSURE AS NOTED ABOVE. DRILLED PIERS SHALL BEAR, OR BE SOCKETED, INTO ROCK.
3. TAKE ALL NECESSARY PRECAUTIONS WHEN EXCAVATING OR DRILLING ADJACENT TO EXISTING STRUCTURES TO AVOID DISTURBING EXISTING FOUNDATIONS. DO NOT EXCAVATE BELOW EXISTING FOUNDATIONS. CONTACT THE ENGINEER IF EXISTING CONDITIONS DIFFER FROM THOSE SHOWN ON THE DRAWINGS.
4. ALL EXCAVATIONS SHALL FULLY CONFORM TO ALL LOCAL, STATE AND FEDERAL SAFETY REGULATIONS.
5. DO NOT BACKFILL AGAINST CONCRETE ELEMENTS UNTIL PLACED CONCRETE HAS REACHED A COMPRESSIVE STRENGTH OF 3000 PSI.
6. BACKFILL BOTH SIDES OF FOUNDATION WALLS IN EQUAL, ALTERNATE LIFTS IN ORDER TO AVOID IMPOSING EXCESSIVE UNBALANCED LATERAL PRESSURE ON THE WALLS.

**CONCRETE NOTES:**

1) PROVIDE THE FOLLOWING 28-DAY CONCRETE COMPRESSIVE STRENGTHS:
a. SLABS-ON-GRADE AND DRILLED PIERS: 4000 PSI
b. PIERS, GRADE BEAMS, AND FROST WALLS: 4500 PSI

2) REFER TO THE PROJECT SPECIFICATIONS FOR DETAILED REQUIREMENTS FOR MIX DESIGN AND SUBMITTALS.

3) PROVIDE THE FOLLOWING MINIMUM CONCRETE COVER:
a. DRILLED PIERS: 4 IN.
b. CONCRETE PLACED AGAINST EARTH: 3 IN.
c. ALL OTHER CONCRETE: 2 IN.

4) ALL CONCRETE WORK, CONSTRUCTION, AND REINFORCING DETAILS SHALL CONFORM TO THE "BUILDING CODE OF NEW YORK STATE, 2010".

5) ALL REINFORCING STEEL SHALL BE DETAILED, FABRICATED AND PLACED IN ACCORDANCE WITH THE PROJECT SPECIFICATIONS.

6) ALL REINFORCING BARS SHALL CONFORM TO ASTM A615 GRADE 60.

7) ALL REINFORCING SHALL BE LAPPED OR EMBEDDED IN ACCORDANCE WITH ACI 318, UNLESS OTHERWISE NOTED.

8) SUBMIT SHOP DRAWINGS FOR REINFORCING (INCLUDING ALL NECESSARY ACCESSORIES TO HOLD REINFORCING SECURELY IN PLACE), FOR REVIEW AND APPROVAL.

9) ALL FOUNDATION EXCAVATIONS ARE SUBJECT TO APPROVAL BY THE ENGINEER IN CHARGE BEFORE ANY CONCRETE IS PLACED.

10) ALL FORMS AND REINFORCING STEEL IN PLACE SHALL BE APPROVED BY THE ENGINEER IN CHARGE BEFORE ANY CONCRETE IS PLACED.

11) FOUNDATIONS SHALL NOT BE PLACED IN WATER, ON FROZEN GROUND OR EXPOSED TO WEATHER.

**STRUCTURAL STEEL NOTES (CATWALK AREA ONLY, ALL OTHER STEEL BY PEMB MANUFACTURER):**

1) STRUCTURAL STEEL SHAPES SHALL CONFORM TO THE FOLLOWING:
a. WIDE FLANGE SHAPES: ....ASTM A992, $F_y$=50 KSI
b. CHANNELS: ....ASTM A36
c. PLATES, BARS AND ANGLES: ....ASTM A36
d. HOLLOW STRUCTURAL SECTIONS (HSS) - SQUARE OR RECTANGULAR: ....ASTM A500, GRADE B

2) BOLTED CONNECTIONS SHALL CONFORM TO THE FOLLOWING:
a. HIGH-STRENGTH BOLTS: ....ASTM A325

3) ANCHOR RODS SHALL CONFORM TO THE FOLLOWING:
a. ANCHOR RODS (U.O.N.): ....ASTM F1554, GRADE 36, WELDABLE (S1)

4) WELDING ELECTRODES SHALL CONFORM TO THE FOLLOWING:
a. AWS SPECIFICATIONS FOR ELECTRODES BASED ON WELDING PROCESS AND THE TYPE AND GRADE OF STEEL. E70XX ELECTRODES (MIN.) FOR FILLET WELDS.

5) ALL STRUCTURAL STEEL SHALL BE DETAILED, FABRICATED AND ERECTED IN STRICT ACCORDANCE WITH THE LATEST AISC SPECIFICATIONS.

6) SHOP FABRICATE TO THE GREATEST EXTENT POSSIBLE BY WELDING INCLUDING BEAM STIFFENERS, COLUMN CAPS AND BASES, HOLES AND CONNECTIONS.

7) ERECT ALL STEEL IN ACCORDANCE WITH THE PROJECT SPECIFICATIONS.

8) PROVIDE TEMPORARY BRACING FOR ALL ERECTED STEEL FRAMING UNTIL ALL CONNECTIONS HAVE BEEN TIGHTENED AS SPECIFIED.

9) CUTS, HOLES, COPES, ETC., REQUIRED FOR WORK OF THE OTHER TRADES SHALL BE SHOWN ON SHOP DRAWINGS AND MADE IN THE SHOP. FIELD CUTTING OR BURNING WILL NOT BE PERMITTED.

10) ALL WELDING BOTH SHOP AND FIELD SHALL BE PERFORMED BY CERTIFIED WELDERS IN ACCORDANCE WITH AWS SPECIFICATIONS. WELDING ELECTRODES SHALL CONFORM TO ASTM A233, E70-XX. MINIMUM WELD SIZE SHALL BE 1/4 INCHES (FILLET) UNLESS OTHERWISE NOTED.

11) AFTER ERECTION, ALL DAMAGED AREAS IN THE SHOP COAT AND AT ALL FIELD WELD LOCATIONS, SHALL BE TOUCHED UP WITH THE SAME PAINT USED FOR THE PRIMER AND SHOP COAT. PREPARE SURFACES IN ACCORDANCE WITH THE SPECIFICATIONS.

12) CONTRACTOR SHALL SUBMIT SHOP DRAWINGS FOR REVIEW.

**METAL STUD FRAMING**

1. ALL STRUCTURAL MEMBERS SHALL BE DESIGNED IN ACCORDANCE WITH AMERICAN IRON AND STEEL INSTITUTE (AISI) "SPECIFICATIONS FOR THE DESIGN OF COLD-FORMED STEEL STRUCTURAL MEMBERS", LATEST EDITION.
2. ALL STRUCTURAL MEMBERS SHALL BE FORMED FROM CORROSION-RESISTANT STEEL, CORRESPONDING TO THE REQUIREMENTS OF ASTM A1003 WITH A MINIMUM YIELD STRENGTH OF 33 KSI, UNLESS OTHERWISE NOTED, MEETING THE TOLERANCES NOTED IN ASTM C955.
3. ALL STRUCTURAL MEMBERS SHALL BE ZINC COATED MEETING ASTM A653, Z-90.
4. ALL VERTICAL STUDS SHALL BE BRACED AT 4 FEET ON CENTER VERTICALLY UTILIZING A HORIZONTAL STRAP AND BLOCKING OR COLD-ROLLED CHANNEL.
5. PERSONNEL EXPERIENCED IN LIGHT GAUGE STEEL FRAMING INSTALLATION SHALL INSTALL ALL STEEL FRAMING.
6. PROVIDE A DOUBLE STUD AT ALL CORNER CONDITIONS.
7. METAL STUD FOUR PART IDENTIFICATION CODE IS AS FOLLOWS:

MEMBER DEPTH:
(EXAMPLE: 6" = 600 x 1/100 INCHES)
ALL MEMBER DEPTHS ARE TAKEN IN 1/100 INCHES. FOR ALL "T" SECTIONS MEMBER DEPTH IS THE INSIDE TO INSIDE DIMENSION.

FLANGE WIDTH:
(EXAMPLE: 1 5/8" = 1.625" ≈ 162 x 1/100 INCHES)
ALL FLANGE WIDTHS ARE TAKEN IN 1/100 INCHES.

600 S 162 54

STYLE:
(EXAMPLE: STUD OR JOIST SECTION = S)
THE FOUR ALPHA CHARACTERS UTILIZED BY THE DESIGNATOR SYSTEM ARE:
S = STUD OR JOIST SECTIONS
T = TRACK SECTIONS
U = CHANNEL SECTIONS
F = FURRING CHANNEL SECTIONS

MATERIAL THICKNESS:
(EXAMPLE: .054 IN = 54 MILS;
1 MIL= 1/1000 IN)
MATERIAL THICKNESS IS IN THE MINIMUM BASE METAL THICKNESS IN MILS.

8. AT VARIOUS LOCATION IN THE CONSTRUCTION DOCUMENTS, GAGE NO. ARE USED. THESE NUMBERS ARE FOR REFERENCE ONLY. MINIMUM ACCEPTABLE MATERIAL THICKNESS DELIVERED TO THE JOBSITE IS AS FOLLOWS:

| MINIMUM THICKNESS (mils*) | REFERENCE ONLY (GAGE NO.) |
|---|---|
| 33 | 20 |
| 43 | 18 |
| 54 | 16 |
| 68 | 14 |
| 97 | 12 |

* 1 mil = $^1/_{1000}$ inch

2

**SPECIAL INSPECTIONS:**

1) ALL PREFABRICATED ITEMS SHALL BE MANUFACTURED BY APPROVED AND CERTIFIED SHOPS.

2) SPECIAL INSPECTIONS WILL BE REQUIRED FOR THIS PROJECT. THE CONTRACTOR SHALL COORDINATE ALL WORK WITH THE OWNER'S TESTING AND SPECIAL INSPECTION REPRESENTATIVES.

3) REFER TO SCHEDULE OF STRUCTURAL SPECIAL INSPECTIONS AND SPECIFICATIONS FOR ADDITIONAL INFORMATION.

# STRUCTURAL ABBREVIATION LEGEND

| | |
|---|---|
| ACI | AMERICAN CONCRETE INSTITUTE |
| AISC | AMERICAN INSTITUTE OF STEEL CONSTRUCTION |
| APPROX. | APPROXIMATE |
| ARCH. | ARCHITECT/ARCHITECTURAL |
| ASTM | AMERICAN SOCIETY FOR TESTING AND MATERIALS |
| AWS | AMERICAN WELDING SOCIETY |
| BCNYS10 | BUILDING CODE OF NEW YORK STATE, 2010 EDITION (REFERENCE DESIGN CODE) |
| B.O. | BOTTOM OF |
| CIP | CAST-IN-PLACE |
| CJ | CONSTRUCTION JOINT |
| CJP | COMPLETE JOINT PENETRATION WELD |
| CONC. | CONCRETE |
| CONT. | CONTINUOUS |
| COV. | COVER |
| DIA. | DIAMETER |
| (E) | EXISTING |
| EF | EACH FACE |
| ELEV. | ELEVATION |
| EQ. | EQUAL |
| EW | EACH WAY |
| F | FOOTING |
| FD | FLOOR DRAIN |
| FLR | FLOOR |
| FNDN | FOUNDATION |
| FW | FLATWISE |
| GA. | GAGE (REFERENCE ONLY, SEE METAL STUD FRAMING NOTES FOR MIN. BASE METAL THICKNESS) |
| G.B. | GRADE BEAM |
| GALV. | GALVANIZED |
| HORIZ. | HORIZONTAL |
| H.S. | HIGH STRENGTH |
| H.T. | HEIGHT |
| HSS | HOLLOW STRUCTURAL SECTION |
| LB | POUNDS |
| LLH | LONG LEG HORIZONTAL |
| LLV | LONG LEG VERTICAL |
| MAX. | MAXIMUM |
| MIN. | MINIMUM |
| MANUF. | MANUFACTURER |
| MATL | MATERIAL |
| (N) | NEW |
| NYSDOT | NEW YORK STATE DEPARTMENT OF TRANSPORTATION |
| O.C. | ON CENTER |
| O.H. | OVERHEAD |
| P | PIER |
| PAF | POWER ACTUATED FASTENERS |
| PEMB | PRE-ENGINEERED METAL BUILDING/PRE-ENGINEERED METAL BUILDING DESIGNER |
| PLF | POUNDS PER LINEAR FOOT |
| PSI | POUNDS PER SQUARE INCH |
| REINF. | REINFORCING, REINFORCEMENT |
| REQ. | REQUIREMENT |
| RTU | ROOF TOP UNIT |
| SDI | STEEL DECK INSTITUTE |
| SPA.,SP. | SPACE OR SPACING |
| SPEC | SPECIFICATIONS |
| STD. | STANDARD |
| T.O. | TOP OF |
| TOS | TOP OF STEEL |
| TYP. | TYPICAL |
| U.O.N | UNLESS OTHERWISE NOTED |
| VERT. | VERTICAL |
| WP | WORKING POINT |
| WWR | WELDED WIRE REINFORCEMENT |

2

1

NYS OFFICE OF GENERAL SERVICES
Serving New York
ANDREW M. CUOMO
Governor
ROANN M. DESTITO
COMMISSIONER
JAMES M. DAVIES, A.I.A.
Deputy Commissioner, Design and Construction

CONSULTANT

LABELLA Associates, P.C.
Engineering
Architecture
Environmental
Planning
300 STATE STREET, SUITE 201
ROCHESTER, NY 14614
P: (585) 454-6110
F: (585) 454-3066
www.labellapc.com
Copyright © 2012

WARNING:
THE ALTERATION OF THIS MATERIAL IN ANY WAY, UNLESS DONE UNDER THE DIRECTION OF A COMPARABLE PROFESSIONAL, I.E. ARCHITECT FOR AN ARCHITECT, ENGINEER FOR AN ENGINEER OR LANDSCAPE ARCHITECT FOR A LANDSCAPE ARCHITECT, IS A VIOLATION OF THE NEW YORK STATE EDUCATION LAW AND/OR REGULATIONS AND IS A CLASS "A" MISDEMEANOR.

STATE OF NEW YORK
MATTHEW C. WAGER
083282
LICENSED PROFESSIONAL ENGINEER

CONTRACT:
CONSTRUCTION

TITLE:
PROVIDE CITYSCAPE COMPLEX

LOCATION:
STATE PREPAREDNESS TRAINING CENTER
5900 AIRPORT ROAD
ORISKANY, NY 13424

CLIENT:
DIVISION OF HOMELAND SECURITY & EMERGENCY SERVICES

**REVISED DRAWING 08/29/2012**

| MARK | DATE | DESCRIPTION |
|---|---|---|
| 2 | 08/29/2012 | ADDENDUM NO. 3 |
| 1 | 08/15/2012 | ADDENDUM NO. 2 |
| | 07/05/2012 | FINAL SUBMISSION |

PROJECT NUMBER: 44014 – C
DESIGNED BY:
DRAWN BY:
FIELD CHECK:
APPROVED:

SHEET TITLE:
STRUCTURAL NOTES AND SPECIAL INSPECTIONS

DRAWING NUMBER:
S–001

SHEET X OF X

36x24 PLOT SHEET

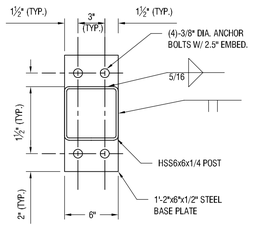


11 BASEPLATE DETAIL FOR BLAST DOOR

Scale: NTS

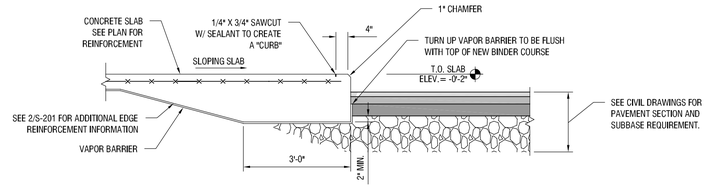


7 SECTION AT EDGE OF ROADWAY

Scale: NTS

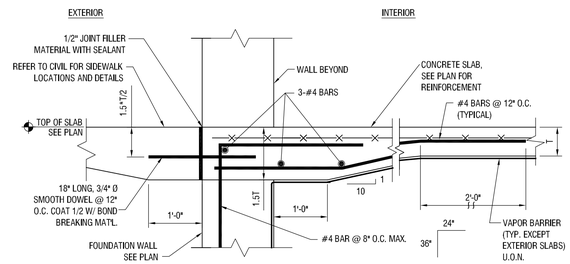


3 TYPICAL SLAB AT DOOR OPENING

Scale: NTS

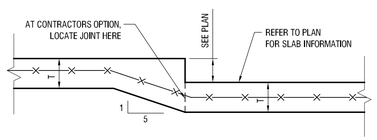


10 TYPICAL RECESSED SLAB DETAIL

Scale: NTS

6 NOT USED

Scale: NTS

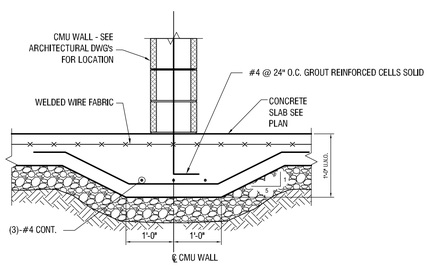


9 TYPICAL THICKENED SLAB BELOW CMU WALLS

NOT TO SCALE

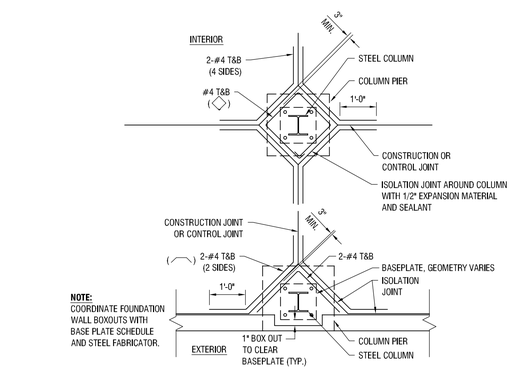


5 TYPICAL COLUMN ISOLATION JOINT DETAILS

Scale: NTS

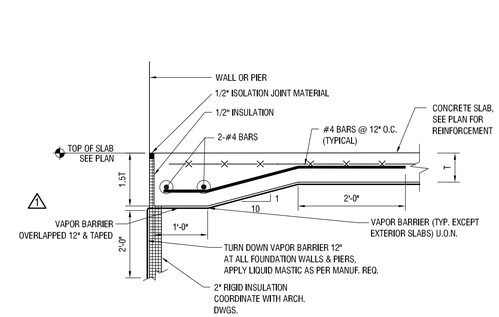


2 TYPICAL SLAB-ON-GRADE EDGE DETAIL

Scale: NTS

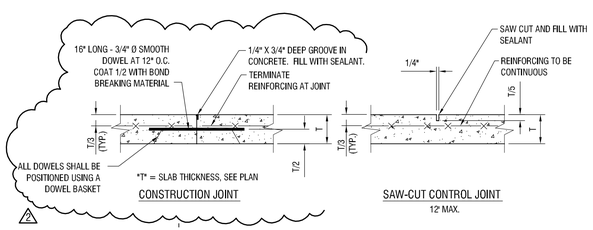


8 TYPICAL SLAB-ON-GRADE JOINT DETAILS

Scale: NTS

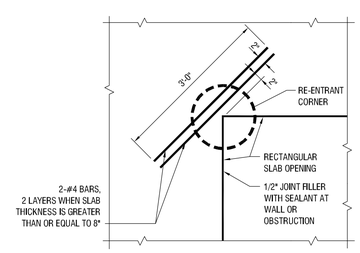


NOTES:
1. TYPICAL AT ALL SLAB AND FOUNDATION RE-ENTRANT CORNERS.
2. 4'-0" LONG BARS ARE TYPICAL AT ENDS OF ALL TRENCH DRAINS.

4 TYPICAL PLAN AT RE-ENTRANT CORNER

Scale: NTS

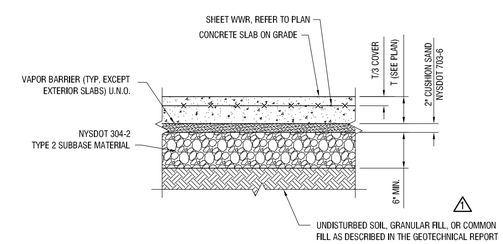


1 TYPICAL SLAB-ON-GRADE DETAIL

Scale: NTS

36x24 PLOT SHEET

NYS OFFICE OF GENERAL SERVICES

*Serving New York*

ANDREW M. CUOMO
Governor
ROANN M. DESTITO
COMMISSIONER
JAMES M. DAVIES, A.I.A.
Deputy Commissioner, Design and Construction

CONSULTANT

LABELLA Associates, P.C.
Engineering
Architecture
Environmental
Planning

300 STATE STREET, SUITE 201
ROCHESTER, NY 14614
P: (585) 454-6110
F: (585) 454-3066
www.labellapc.com
Copyright © 2012

WARNING:
THE ALTERATION OF THIS MATERIAL IN ANY WAY, UNLESS DONE UNDER THE DIRECTION OF A COMPARABLE PROFESSIONAL, I.E. ARCHITECT FOR AN ARCHITECT, ENGINEER FOR AN ENGINEER OR LANDSCAPE ARCHITECT FOR A LANDSCAPE ARCHITECT, IS A VIOLATION OF THE NEW YORK STATE EDUCATION LAW AND/OR REGULATIONS AND IS A CLASS 'A' MISDEMEANOR.

STATE OF NEW YORK · MATTHEW C. WAGNER · 083282 · LICENSED PROFESSIONAL ENGINEER

CONTRACT:
CONSTRUCTION

TITLE:
PROVIDE CITYSCAPE COMPLEX

LOCATION:
STATE PREPAREDNESS TRAINING CENTER
5900 AIRPORT ROAD
ORISKANY, NY 13424

CLIENT:
DIVISION OF HOMELAND SECURITY & EMERGENCY SERVICES

**REVISED DRAWING**
**08/29/2012**

| MARK | DATE | DESCRIPTION |
|---|---|---|
| 2 | 08/29/2012 | ADDENDUM NO. 3 |
| 1 | 08/15/2012 | ADDENDUM NO. 2 |
| | 07/05/2012 | FINAL SUBMISSION |

| | |
|---|---|
| PROJECT NUMBER: | 44014 – C |
| DESIGNED BY: | |
| DRAWN BY: | |
| FIELD CHECK: | |
| APPROVED: | |

SHEET TITLE:
SLAB–ON–GRADE SECTIONS AND DETAILS

DRAWING NUMBER:
S–201

SHEET X OF X

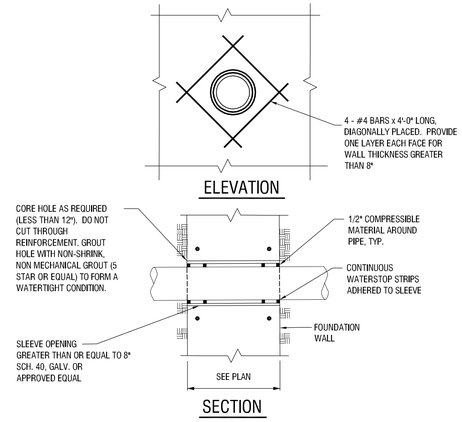


5 PIPE SLEEVE DETAIL THROUGH FROST WALL

Scale: 1/2"=1'-0"

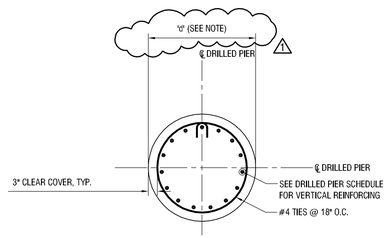


7 DRILLED PIER SECTION AT ROCK SOCKET

Scale: 1/2"=1'-0"

**NOTE:** ROCK SOCKET 'd' SHALL BE 8" LESS THAN DRILLED PIER 'D'. REFER TO PLAN FOR 'D'.

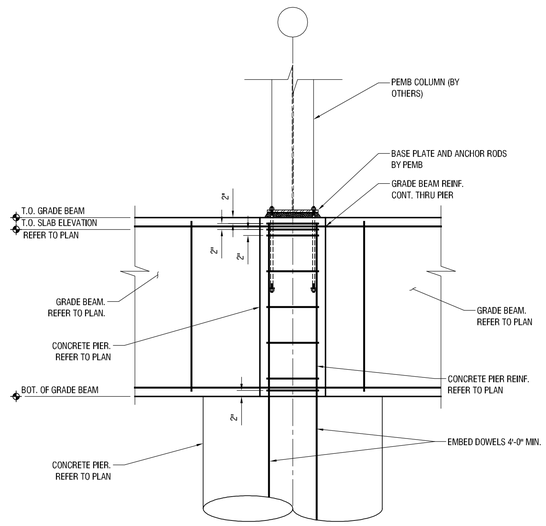


4 CONCRETE PIER AT DRILLED PIER DETAIL

Scale: 1/2"=1'-0"

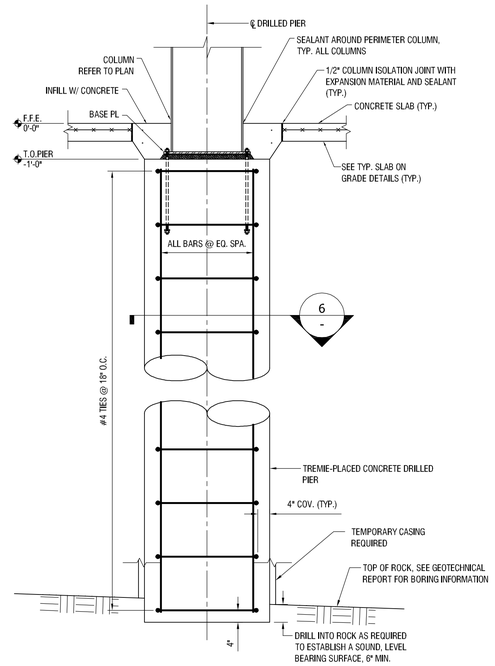


2 TYPICAL DRILLED PIER SECTION AT INTERIOR COLUMN

Scale: 1/2"=1'-0"

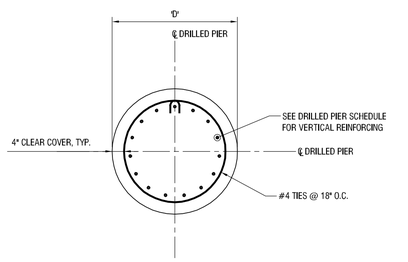


6 TYPICAL DRILLED PIER SECTION

Scale: 1/2"=1'-0"

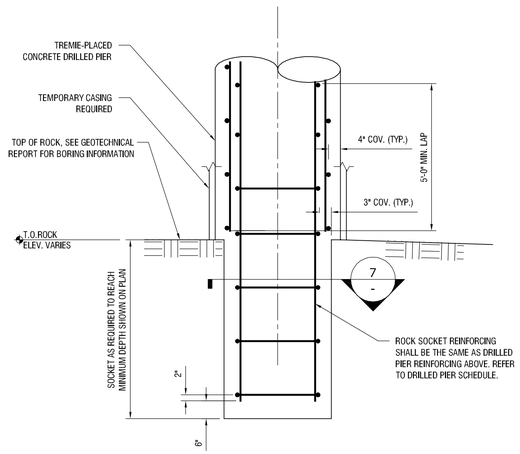


3 TYPICAL DRILLED PIER ROCK SOCKET

Scale: 1/2"=1'-0"

| AB-1B ANCHOR BOLT SCHEDULE | | |
|---|---|---|
| DIA. | EMBEDMENT | "L" |
| 3/4" | 1'-5" | 1'-11 1/2" |
| 7/8" | 1'-7" | 2'-1 1/2" |
| 1" | 1'-10" | 2'-4 1/2" |
| 1 1/8" | 2'-1" | 2'-7 1/2" |
| 1 1/4" | 2'-3" | 2'-9 1/2" |
| 1 1/2" | 2'-8" | 3'-2 1/2" |
| 1 3/4" | 3'-2" | 3'-8 1/2" |
| 2" | 3'-7" | 4'-1 1/2" |

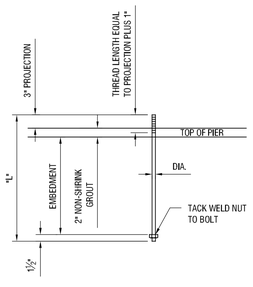


1 ANCHOR BOLT SCHEDULE

Scale: NTS

36x24 PLOT SHEET

NYS OFFICE OF GENERAL SERVICES

*Serving New York*

ANDREW M. CUOMO
Governor
ROANN M. DESTITO
COMMISSIONER
JAMES M. DAVIES, A.I.A.
Deputy Commissioner, Design and Construction

CONSULTANT


LABELLA Associates, P.C.
Engineering
Architecture
Environmental
Planning

300 STATE STREET, SUITE 201
ROCHESTER, NY 14614
P: (585) 454-6110
F: (585) 454-3066
www.labellapc.com

Copyright © 2012

WARNING:

THE ALTERATION OF THIS MATERIAL IN ANY WAY, UNLESS DONE UNDER THE DIRECTION OF A COMPARABLE PROFESSIONAL, I.E. ARCHITECT FOR AN ARCHITECT, ENGINEER FOR AN ENGINEER OR LANDSCAPE ARCHITECT FOR A LANDSCAPE ARCHITECT, IS A VIOLATION OF THE NEW YORK STATE EDUCATION LAW AND/OR REGULATIONS AND IS A CLASS 'A' MISDEMEANOR.

STATE OF NEW YORK · MATTHEW C. WAGNER · 083282 · LICENSED PROFESSIONAL ENGINEER

CONTRACT:
CONSTRUCTION

TITLE:
PROVIDE CITYSCAPE COMPLEX

LOCATION:
STATE PREPAREDNESS TRAINING CENTER
5900 AIRPORT ROAD
ORISKANY, NY 13424

CLIENT:
DIVISION OF HOMELAND SECURITY & EMERGENCY SERVICES

**REVISED DRAWING 08/29/2012**

| MARK | DATE | DESCRIPTION |
|---|---|---|
| 1 | 08/29/2012 | ADDENDUM NO. 3 |
| | 07/05/2012 | FINAL SUBMISSION |

PROJECT NUMBER: 44014 – C

DESIGNED BY:
DRAWN BY:
FIELD CHECK:
APPROVED:

SHEET TITLE:
FOUNDATION SECTIONS AND DETAILS (1 OF 3)

DRAWING NUMBER:
S–202

SHEET X OF X

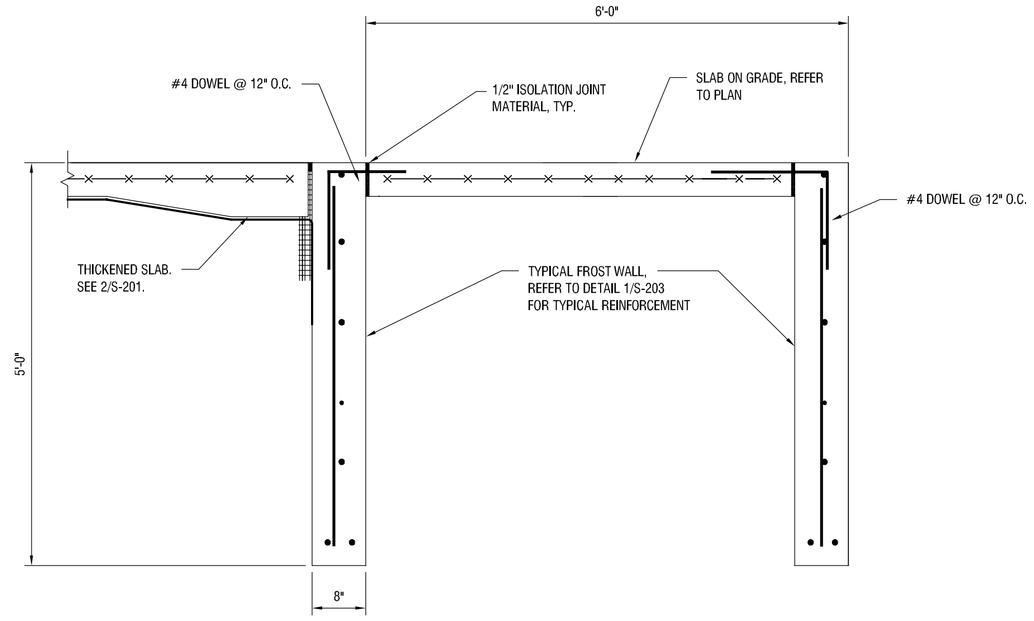


6 SECTION AT EAST CONCRETE APRON

SCALE: 3/4"= 1'-0"

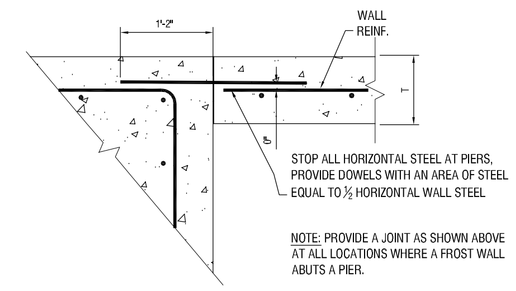


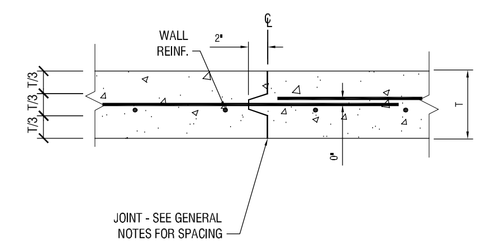


3 TYPICAL FROST WALL CONSTRUCTION JOINT DETAILS

NTS

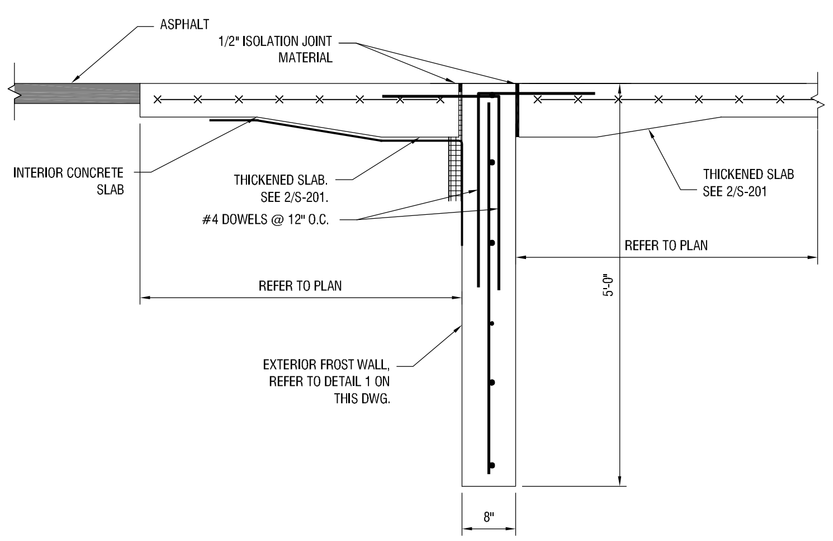


8 FOUNDATION SECTION AT LIGHT LOCK

Scale: 3/4"= 1'-0"

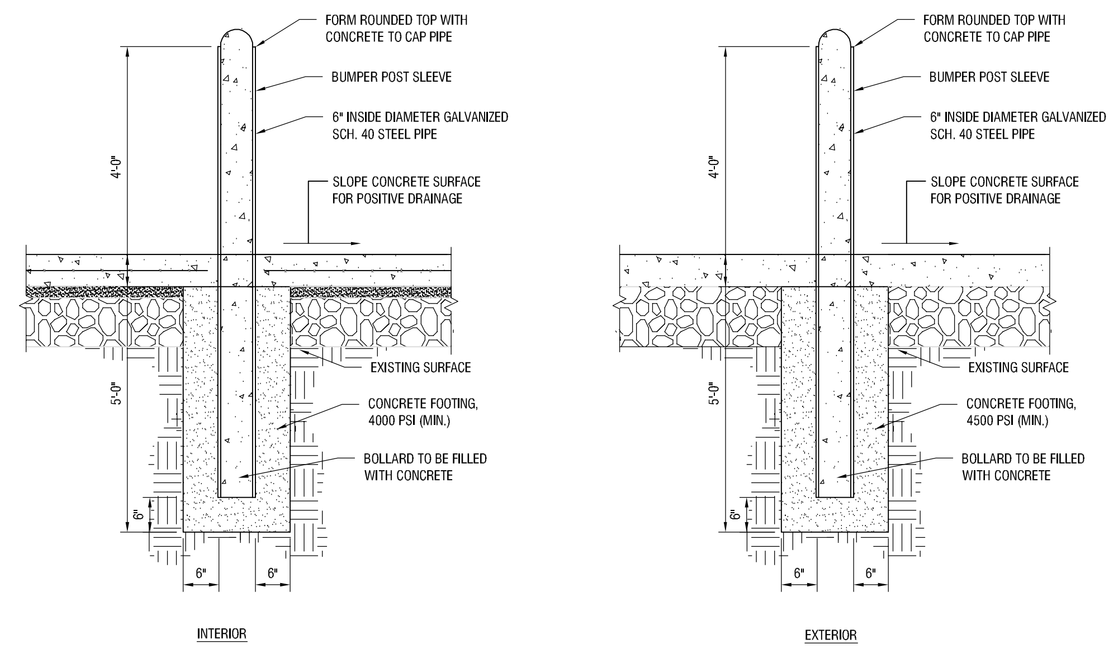


5 STEEL & CONCRETE BOLLARD DETAIL

NTS

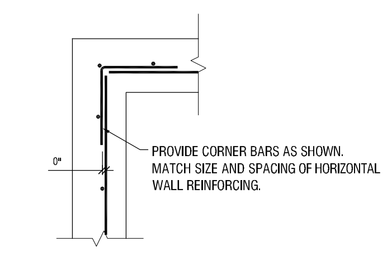


2 TYPICAL FROST WALL REINFORCING AT CORNER

NTS

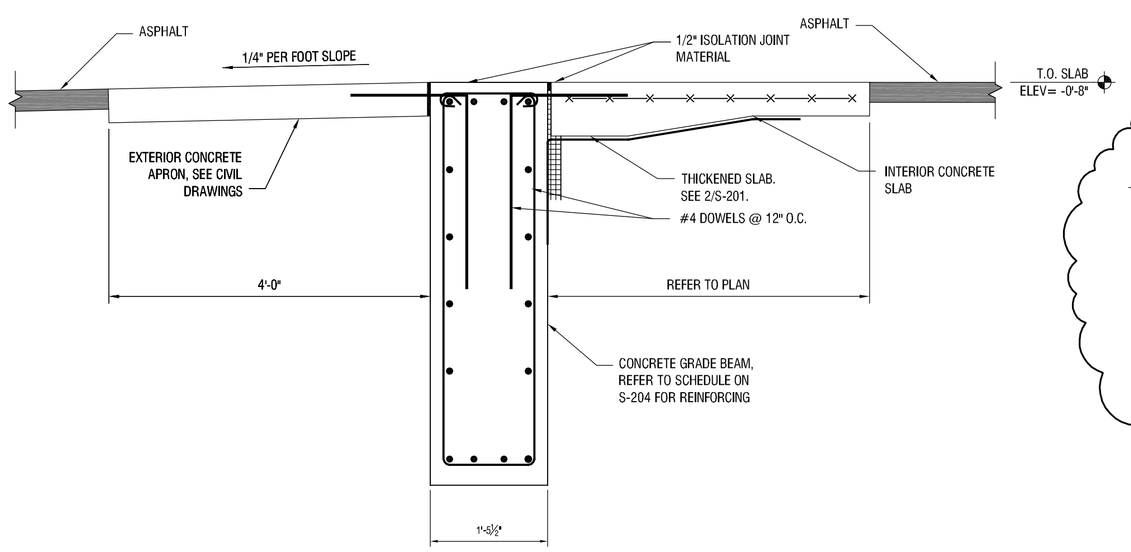


7 FOUNDATION SECTION AT MAIN ENTRANCE

Scale: 3/4"= 1'-0"

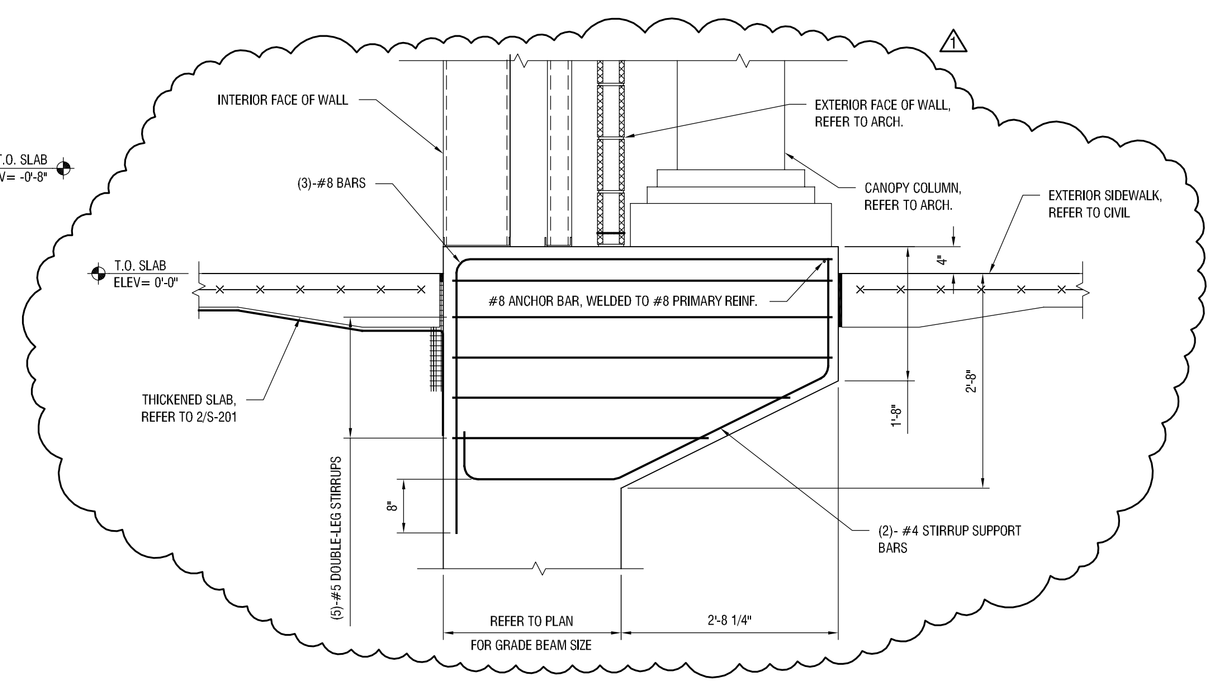


4 FOUNDATION CORBEL AT SOUTH CANOPY

NOTE GRADE BEAM REINFORCEMENT NOT SHOWN FOR CLARITY.

Scale: 1/2"= 1'-0"

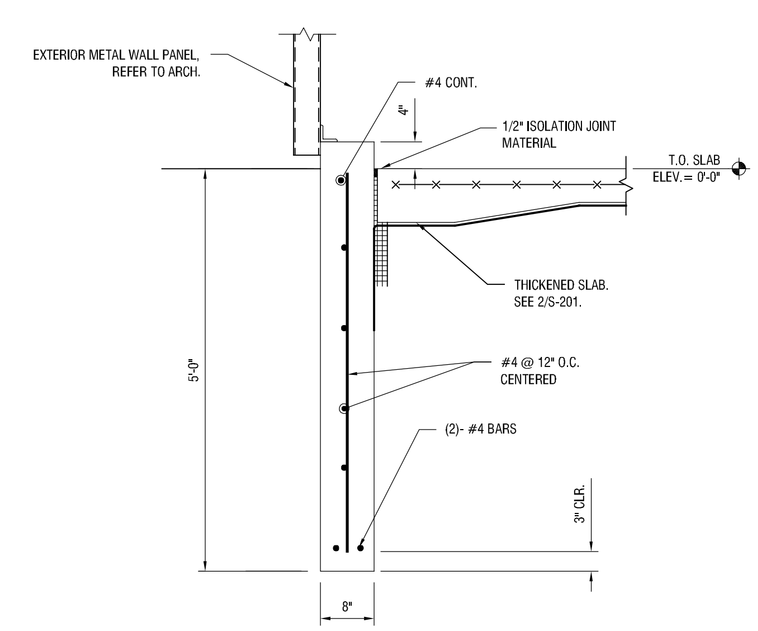


1 TYPICAL EXTERIOR FROST WALL

Scale: 3/4"=1'-0"

36x24 PLOT SHEET

NYS OFFICE OF GENERAL SERVICES

*Serving New York*

ANDREW M. CUOMO
Governor
ROANN M. DESTITO
COMMISSIONER
JAMES M. DAVIES, A.I.A.
Deputy Commissioner, Design and Construction

CONSULTANT


LABELLA Associates, P.C.
Engineering Architecture Environmental Planning

300 STATE STREET, SUITE 201
ROCHESTER, NY 14614
P: (585) 454-6110
F: (585) 454-3066
www.labellapc.com

Copyright © 2012

WARNING:

THE ALTERATION OF THIS MATERIAL IN ANY WAY, UNLESS DONE UNDER THE DIRECTION OF A COMPARABLE PROFESSIONAL, I.E. ARCHITECT FOR AN ARCHITECT, ENGINEER FOR AN ENGINEER OR LANDSCAPE ARCHITECT FOR A LANDSCAPE ARCHITECT, IS A VIOLATION OF THE NEW YORK STATE EDUCATION LAW AND/OR REGULATIONS AND IS A CLASS 'A' MISDEMEANOR.

STATE OF NEW YORK · MATTHEW C. WAGNER · 083282 · LICENSED PROFESSIONAL ENGINEER

CONTRACT:
CONSTRUCTION

TITLE:
PROVIDE CITYSCAPE COMPLEX

LOCATION:
STATE PREPAREDNESS TRAINING CENTER
5900 AIRPORT ROAD
ORISKANY, NY 13424

CLIENT:
DIVISION OF HOMELAND SECURITY & EMERGENCY SERVICES

**REVISED DRAWING 08/29/2012**

| MARK | DATE | DESCRIPTION |
|---|---|---|
| 1 | 08/29/2012 | ADDENDUM NO. 3 |
| | 07/05/2012 | FINAL SUBMISSION |

| | |
|---|---|
| PROJECT NUMBER: | 44014 – C |
| DESIGNED BY: | |
| DRAWN BY: | – |
| FIELD CHECK: | |
| APPROVED: | |

SHEET TITLE:
FOUNDATION SECTIONS AND DETAILS (2 OF 3)

DRAWING NUMBER:
S–203

SHEET X OF X