STATE OF NEW YORK
OFFICE OF GENERAL SERVICES
DESIGN AND CONSTRUCTION GROUP
THE GOVERNOR NELSON A. ROCKEFELLER
EMPIRE STATE PLAZA
ALBANY, NY 12242

ADDENDUM NO. 6 TO PROJECT NO. 44014

CONSTRUCTION WORK, HVAC WORK, PLUMBING WORK, AND ELECTRICAL WORK
PROVIDE CITYSCAPE COMPLEX
STATE PREPAREDNESS TRAINING CENTER
5900 AIRPORT ROAD
ORISKANY, NY

September 10, 2012

NOTE: This Addendum forms a part of the Contract Documents. Insert it in the Project Manual. Acknowledge receipt of this Addendum in the space provided on the Bid Form.

COMMON DIVISION 1 DOCUMENTS

1. Page 011000-1, ARTICLE 1.02 RELATED CONTRACTS: Add the following Paragraph:
   "C. Site Access and Construction Mobilization for HVAC Work, Plumbing Work, and Electrical Work Contracts: Refer to Drawing Nos. C-001, and C-103."

CONSTRUCTION WORK SPECIFICATIONS

2. SECTION 015123 STATE FIELD OFFICE (Issued with Addendum No. 3):
   a. Page 015123-3, Paragraph 3.01 A.: Delete this Paragraph in its entirety, and replace with the following:
      "A. Install unit approximately 100 feet from Building No. 3 at location as directed by Director's Representative."

3. Page 042000-4, ARTICLE 2.04 ACCESSORIES: Add the following Paragraphs:
   "K. Integral Water Repellant (Exposed Units): Liquid polymeric, integral water-repellent admixture that does not reduce flexural bond strength. Units made with integral water repellent, when tested according to ASTM E 514 as a wall assembly made with mortar containing integral water-repellent manufacturer's mortar additive, with test period extended to 24 hours, shall show no visible water or leaks on the back of test specimen.
      1. Acceptable Products:
         a. ACM Chemistries; RainBloc.
         b. BASF Aktiengesellschaft; Rheopel Plus.
         c. Grace Construction Products, W. R. Grace & Co. - Conn.; Dry-Block."

   L. Water Repellant Admixture (Mortar): Liquid water-repellant mortar admixture intended for use with concrete masonry units, containing integral water repellant by same manufacturer.
      1. Acceptable Products:
         a. ACM Chemistries; RainBloc for mortar.

b. BASF Aktiengesellschaft; Rheopel Mortar Admixture.

c. Grace Construction Products, W. R. Grace & Co. - Conn.; Dry-Block Mortar Admixture."

4. SECTION 047012 ADHERED CONCRETE MASONRY VENEER: Change "040712" section number at bottom of page to read "047012".

5. SECTION 053100 FLUTED STEEL DECKS: Add attached Section (pages 053100-1 thru 053100-3) to the Project Manual.

6. Page 054000-1, PART 1 GENERAL: Add the following Article:
"1.06 SUMMARY OF THE WORK
A. This Section includes all exterior and interior walls and partitions indicated on the drawings to be 16 gage or greater.
1. Exception: Partition Type S9 shown on Drawing No. A-500.
2. Refer to Section 092116 GYPSUM BOARD SYSTEMS for lighter stud construction."

7. Page 054000-2, Subparagraph 2.02 B.1.: Delete this Subparagraph in its entirety and replace with the following:
"1. Exterior and interior stud wall shall be constructed using minimum 16 gage studs as indicated on the Contract Drawings."

8. Page 133419-8, Paragraph 2.02 B.: Delete the words "or tapered" in the first line.

9. Page 133419-10, Subparagraph 2.04 C. 1.a.: Delete this Subparagraph in its entirety and replace with the following:
"1. Metal Thickness: 0.030 inch/22 gage."

10. Page 316329-2, Paragraph 1.05 G.: Delete this Paragraph in its entirety and replace with the following:
"G. The Contractor shall submit results of the concrete testing to the Engineer for review."

HVAC WORK SPECIFICATIONS

11. Page 230923-34, Subparagraph 3.03 C.4.a.: Delete this Subparagraph in its entirety, and replace with the following:
"a. Zone control valves are self contained thermostatic valves that shall cycle independent of the DDC system to maintain space set point."

12. Page 233300-5, ARTICLE 2.05 DAMPER ACTUATORS: Add the following Paragraph:
"E. Damper Actuator Locations:
1. All damper actuators associated with louvers L-3 through l-21 shall be located in the airstream
2. All damper actuators associated with louvers L-SP1 through L-SP11 shall be located outside of the air stream."

13. Page 237313-1, Subparagraph 2.01 A.3.: Change "Renew Aire" to read Team-Air".

14. Page 237313-2, Paragraph 2.02 D.: Delete this Paragraph in its entirety, and replace with the following:

"D. Enthalpy Wheel: Enthalpy Wheel shall recover both sensible and latent heat and be AHRI 1060 certified. The matrix shall be constructed from corrugated aluminum and specifically treated and coated with Silica Gel desiccant to assist and enhance latent heat transfer. Segmented wheel shall be provided on diameter sizes above 96". Seals shall be full contact, low bleed type, made from dual band Ultra High Molecular Weight Polyethylene. Drive system shall be operated by a fractional horsepower motor (maximum 1 HP), reducing gear-box, pulley and V-belt. Belts shall be made of multi link high-tech urethane/polyester composite. The wheel bearing shall be permanently sealed and press fitted into the wheel matrix for wheel sizes up to 96", and greasable bearings for wheel larger than 96 inches. Frost control prevention shall be accounted for if outdoor air temperatures are below 10°F at equal airflows and return relative humidity below 30%. Frost control shall be accomplished by a variable speed drive and controlling the leaving air condition of the exhaust air. Wheel speed shall not rotate faster than 20 RPM."

PLUMBING WORK SPECIFICATIONS

15. SECTION 211300 SPRINKLER PIPING: Discard the Section bound in the Project Manual and substitute the attached Section (pages 211300-1 thru 211300-8) noted "Revised 9/5/12".

16. SECTION 211313 SPRINKLER SYSTEMS: Discard the Section bound in the Project Manual and substitute the attached Section (pages 211313-1 thru 211313-9) noted "Revised 9/5/12".

17. SECTION 224500 EMERGENCY PLUMBING FIXTURES: Add attached Section (pages 224500-1 thru 224500-3) to the Project Manual.

CONSTRUCTION WORK DRAWINGS

18. Revised Drawing No. A-103 (Dated 8/15/12) NORTH FIRST FLOOR PLAN:
    a. Typical Detail X/A-XXX: Partition type shall match Sections 3/A-310 and 4/A-310, typical at 5 locations.
    b. Secretary Window at Room 102: Add "W07" window designation symbol.

19. Revised Drawing No. A-105 (Dated 8/15/12), NORTH SECOND FLOOR PLAN:
    a. Typical Detail X/A-XXX: Partition type shall match Sections 3/A-310 and 4/A-310, typical at 5 locations.

20. Drawing No. A-415, Section 7: Change the Note, "Poured in place concrete wall. See structural drawings" to read "Poured in place concrete wall. Provide 4000 psi lightweight concrete."

21. Drawing No. A-417, Section 7: Change the Note, "Poured in place concrete wall. See structural drawings" to read "Poured in place concrete wall. Provide 4000 psi lightweight concrete."

22. Drawing C-104, ENLARGED SITE AND LAYOUT PLAN:
    a. Delete the Note, "Mechanical equipment and concrete pad by 'H' Contractor"

b. Add the following Note, "48 ft-6 inches x 14 ft-0 inches x 12 inch thick concrete pad with No. 5 reinforcing bars 18 inch o.c. both ways" to the larger concrete pad for the makeup air unit.

b. Add the following Note, "15 ft-0 inches x 6 ft-0 inches x 12 inch thick concrete pad with No. 5 reinforcing bars 18 inch o.c. both ways" to the smaller concrete pad for the condensing units.

23. Drawing Nos. S-101 and S-102, DRILLED PIERS NOTES, NOTE 2: Delete this Note in its entirety and replace with the following:

"2. Assume top of rock is at -20'-0". In addition, assume that some rock socketing will be required to achieve minimum depths as indicated. assume thirty (30) linear feet of rock socketing at drilled pier type P-2 and also thirty (30) linear feet of rock socketing at drilled pier type P-3. Note that there is a 1 to 3 foot thick layer of weathered shale located above the sound shale. All drilled piers shall bear on sound shale or be socketed into sound shale."

24. Addendum Drawings:

a. Drawing Nos. A-110, A-111, A-112, A-113, A-610, A-611, A-612, and A-613 noted "ADDENDUM DRAWING 9/5/12" accompany this Addendum and form part of the Contract Documents.

25. Revised Drawings:

a. Drawing Nos. A-309, A-601, A-607, A-609, S-103, S-104, S-105, S-201, and S-301 noted "REVISED DRAWING 9/5/12" accompany this Addendum and supersede the same numbered originally issued drawings.

b. Drawing Nos. A-601, noted "REVISED DRAWING 9/5/12" accompanies this Addendum and supersedes the same numbered originally issued drawing, as well as same numbered Revised Drawing issued with Addendum No. 2 dated 8/15/12.

HVAC WORK DRAWINGS

26. Drawing No. M-700, MECHANICAL DETAILS, DRAWING TITLE BLOCK:

a. Add "HVAC" to Contract Designation.

b. Add "H" to the end of Project Number "44014".

27. Revised Drawings:

a. Drawing Nos. M-100, M-102, M-105, M-600, and M-700 noted "REVISED DRAWING 9/5/12" accompany this Addendum and supersede the same numbered originally issued drawings.

PLUMBING WORK DRAWINGS

28. Revised Drawings:

a. Drawing Nos. P-000, P-200, P-500, P-501, FP-000, FP-100, FP-101, FP-102, FP-103, FP-104, FP-105, FP-200, and FP-500 noted "REVISED DRAWING 9/5/12" accompany this Addendum and supersede the same numbered originally issued drawings.

ELECTRICAL WORK DRAWINGS

29. Electrical Contract Drawings, Revised Drawings, and Addendum Drawings: Add "ELECTRICAL" to the Contract Designation in the drawing title block where it is missing.

30. Drawing E-109NORTH SECOND FLOOR PLAN POWER: In Electric Room 200, Change "MAIN DISTRIBUTION PANEL MDP-1 600A" to read "MAIN DISTRIBUTION PANEL MDP-1 1000A."

31. Drawing No. FA-001, FIRE ALARM GENERAL NOTES AND SYMBOLS:
    a. GENERAL NOTES: Delete Note Nos. 2, 3, 4, 5, 6, and 7.
    b. SYMBOL AND DESCRIPTION LIST: Delete the following symbols and descriptions:
        1) Fire Alarm Remote Annunciator.
        2) Fire Alarm Supplementary Power Panel.
        3) Fire Alarm Synchronization Module.
        4) Fire Alarm SLC Circuit Surge Isolation Module.
        5) Fire Alarm Special Hazard Horn/Strobe.
        6) Exterior Rotating Beacon.
        7) Fire Alarm Bell.
        8) Fire Alarm Magnetic Door Holder.
        9) Weatherproof Device.
        10) Wall Mounted Device.
        11) Floor Mounted Device.
        12) Fire Alarm Junction Box.
    c. SYMBOL AND DESCRIPTION LIST: Change "PC" symbol for protective cover to read "G".
    d. DETAIL 1: Delete System Input #4 'SYSTEM SMOKE DETECTOR' and all system outputs.

32. Drawing No. FA-501, FIRE ALARM DETAILS, DETAIL 4, Note 4: Add the following sentence to the end of the Note:
    "The battery cabinet shall be mounted with the top of the cabinet no more than 36 inches above finished floor."

33. Drawing No. FA-601, FIRE ALARM ONE LINE DIAGRAM:
    a. DETAIL 1: Change "RTU-1" mechanical equipment designation to read "MAU-1" for the control unit Outside Motel Room 120 providing the control.
    b. DETAIL 3:
        1) Add "75" candela rating for 'MALL CORRIDOR 202' training horn strobe.
    c. DETAIL 4:
        1) Change "0" total for 15 candella ASB-24MCC to read "11".
        2) Change "0" total for 75 candella ASB-24MCC to read "3".

34. Drawing No. EY-501, SECURITY DETAILS, DETAIL 3:
    a. DETAIL 2: Change "Smoked Camera Dome" to read "Clear Camera Dome".
    b. DETAIL 3: Change "Smoked Dome" to read "Clear Dome".
    c. DETAIL 3: Change the Note, "Secure camera power and communication cables inside stainless steel armored cable. Secure to housing and camera arm" at the right of the detail to read "Secure camera and communication cables inside stainless steel armored cable. Secure to housing and camera arm".
    d. DETAIL 3: Change the Note, "Secure with mounting fasteners suit" at right of detail to read "Secure with mounting fasteners suited for the environment".

35. Drawing EY-602, SCHEDULE: Change the location of security camera S8 from "NE Corner facing S" to "NW corner facing south".

36. Drawing EY-605, ONE LINE DIAGRAM:
    a. Add an additional door contact to Door #12 to ensure both door leafs of the door opening are monitored.
    b. Add the title "Intrusion Detection One Line Diagram" to the one line diagram with motion detectors (upper left).
    c. Add the title "Security Camera System One Line Diagram" to the one line diagram with security cameras (lower left).
    d. Add the title "Access Control One Line Diagram" to the one line diagram with access control components in it (right).
    e. Change the location of keypad one from "Located in Lobby 101" to "Located Outside of Lobby 101".
    f. Change the location of keypad two from "Located in Room 151" to "Located Outside of Room 151".

37. Drawing No. T-001, DETAIL 3 TELECOM GENERAL NOTES:
    a. Delete Notes 1, 3, 4, 6, 7, 9, 10, 11, 12, and 13 in their entirety.
    b. Note 8: Delete Note in its entirety, and replace with the following:
       "8. Leave a minimum of 18 inches of excess cable at patch panel end".
    c. Add the following Note:
       "16. Cable ID as shown on the drawings consist of telecom room number, patch panel number, and patch panel port number. Example: 2d03= tr #2, patch panel #d and port #03".
38. Revised Drawings:
    a. Drawing Nos. EY-001, EY-104, EY-601, EY-603, EY-604, T-502 noted "REVISED DRAWING 9/5/12" accompany this Addendum and supersede the same numbered originally issued drawings.

END OF ADDENDUM

James Dirolf, P.E.
Director of Design

JRC:jc

SECTION 053100

FLUTED STEEL DECKS

PART 1 GENERAL

1.01 RELATED WORK SPECIFIED ELSEWHERE

A. Field Touch-up Painting: Section 099101.

1.02 REFERENCES

A. Comply with the following reference standards unless otherwise shown or specified:
   1. Design: "Specification for the Design of Cold-Formed Steel Structural Members" by the American Iron and Steel Institute (AISI Specification).
   2. Welding: "Structural Welding Code - Sheet Steel, AWS D 1.3", by the American Welding Society (AWS Code).

1.03 SUBMITTALS

A. Shop Drawings: Show application to project. Prepare separate drawings, coordinated with, but not superimposed on, joist drawings or structural steel erection drawings.

B. Product Data: Manufacturer's printed specifications and installation instructions.

1.04 HANDLING AND STORAGE

A. Handle and stack materials carefully in order to prevent deformation or damage. During unloading and hoisting, take extra care to prevent damage to ends and sides of individual metal deck panels. Do no place panels in direct contact with the ground. Protect panels from the elements and keep panels dry.
   1. If mud, dirt, or other foreign matter is accumulated on panels, remove such accumulation completely prior to installation.

PART 2 PRODUCTS

2.01 MATERIALS

A. Fluted Deck and Metal Accessories: Sheet steel conforming to ASTM A 611 Grade C or ASTM A 653 SQ Grade 33. Before fabrication, sheet steel shall receive ASTM A 525, Class G 90, hot dip zinc coating. Finish shall be evenly coated with no cracking after fabrication. Accessories shall be fabricated of not lighter than 18 US Standard Gage sheet steel.

B. Self-Drilling Fasteners: No. 12-14 x 3/4 inch, hex washer head, self-drilling fastener with pilot point.

2.02 FABRICATION

A. Steel deck shall be formed with maximum distance of 2-5/8 inches between flutes at upper faces and a minimum distance of 2 inches at lower flute faces. Furnish units in lengths to be continuous over 3 spans wherever possible.

B. Steel deck shall conform to the following properties:
   1. Unit depth: 1-1/2”
   2. Minimum section modulus at supports for negative bending in continuous spans: 0.26
   3. Minimum section modulus for positive bending: 0.25
   4. Minimum moment of inertia: 0.22
   5. Minimum US Standard Gage: 20
   6. Flute spacing: 6”
   7. Finish: Hot Dipped Galvanized

C. Unless otherwise indicated or approved, fabricate deck for predetermined openings, and reinforce where required to maintain deck strength, alignment, and profile.
   1. Small openings, as recommended by the deck manufacturer, may be field cut.

D. Accessories: Shop fabricated accessories, compatible with steel deck, as required to complete the Work, including, but not limited to, the following:
   1. Sheet metal cants beneath flashings when required for roofing over steel deck.
   2. Closures to close deck at ridges, valleys, and hips on roof deck slopes exceeding 1/2 inch per foot.

E. Progress shop fabrication from “APPROVED” or “APPROVED AS NOTED” detail drawings only.
   1. When detail drawings are “APPROVED AS NOTED”, progress fabrication in strict accordance with notes thereon.
   2. Fabrication progressed from “DISAPPROVED” or “RETURNED FOR CORRECTION” detail drawings will be rejected. The contractor shall have no claim against the State for any costs or delays due to rejection of items fabricated from “DISAPPROVED” or “RETURNED FOR CORRECTION” detail drawings.

PART 3 EXECUTION

3.01 EXAMINATION

A. Examine supporting framing and field conditions for compliance with requirements for installation tolerances and other conditions affecting performance of steel deck.

B. Do not start installation of metal deck until corresponding steel framework has been plumbed, aligned and completed and until temporary shoring, where required, has been installed. Coordinate installation sequence of metal deck with concrete encasement of steel beams.

C. Steel surfaces to which materials, provided under this Section, are to be welded, shall be free of paint, ice, water, oil, dirt, rust and other materials detrimental to welding.

D. Locate decking bundles to prevent overloading of supporting members

3.02 INSTALLATION

A. Install the Work of this Section in accordance with the manufacturer’s printed instructions except where shown or specified otherwise.
   1. Welding shall comply with the AWS Code.

2. Perform welding free of sharp points.

B. Place deck units on supporting steel framework and adjust to final position with ends bearing on supporting members and flutes in straight and true alignment through entire length of run before being permanently fastened. Do not stretch or contract side lap interlocks. Install temporary shoring before placing single span deck panels when required to meet manufacturer's recommendations.

C. End Bearing: Install deck units over supporting framing with a minimum end bearing of 1-1/2 inches, with end joints as follows:
1. Non-Composite Deck End Joints: Lapped 2 inches minimum.

D. Deck Fastening: Fasten deck units at ends and intermediate supports with arc spot welds (puddle welds) not less than 3/4 inch diameter, at 12 inches on centers, along the supporting members, unless more stringent requirements are indicated on the drawings or required by the fire resistance ratings indicated on the drawings. Weld the first and last deck flutes. Use welding washers for all deck lighter than 20 gage. Deck units may be fastened to steel supports 0.18 inches or less in thickness (cold-formed metal framing) with No.12-14 x 3/4 inch self-drilling fasteners at 12 inches on center at ends and intermediate supports.

E. Side lap fastening: Fasten side laps at intervals not exceeding 36 inches, using one of the following methods, unless more stringent requirements are indicated on the drawings or required by the fire resistance ratings indicated on the drawings:
1. Mechanically fasten with self-drilling No.12 diameter or larger carbon steel screws.

F. Perimeter Edge Fastening: Weld starting and finishing side edges in bearing to supporting members at 36 inches on centers maximum, unless more stringent requirements are indicated on the drawings or required by the fire resistance ratings indicated on the drawings.

G. Neatly field cut required openings, other than shop fabricated openings, after installation in accordance with the manufacturer's recommendations.

END OF SECTION

SECTION 211300

SPRINKLER PIPING

PART 1 GENERAL

1.01 RELATED WORK SPECIFIED ELSEWHERE

A. Through Penetration Firestops: Section 078400.

B. Sealants: Section 079200.

1.02 REFERENCES

A. NFPA 13 - Standard for the Installation of Sprinkler Systems.

B. NFPA 14 - Standard for the Installation of Standpipe and Hose Systems.

1.03 SUBMITTALS

A. Product Data:
   1. Catalog sheets and specifications indicating manufacturer name, type, applicable reference standard, schedule, or class for specified pipe and fittings.
   2. Material Schedule: Itemize pipe and fitting materials for each specified application in Pipe and Fittings Schedule in Part 3 of this Section. Where optional materials are specified indicate option selected.

PART 2 PRODUCTS

2.01 STEEL PIPE AND FITTINGS

A. Steel Pipe for Threading: Standard weight, Schedule 40, black or galvanized; ASTM A 53, Grade B.

B. Steel Pipe for Cut Grooving: Standard weight, Schedule 40, black or galvanized; ASTM A 53, Grade B, Type F for sizes 3/4 inch to 1-1/2 inch, and Type E or S for sizes 2 inch to 24 inch, or ASTM A 135.

C. Cast Iron Fittings:
   1. Drainage Pattern, Threaded: ASME B16.12.
   2. Steam Pattern, Threaded: ASME B16.4.
      a. Standard Weight: Class 125.
      b. Extra Heavy Weight: Class 250.
   3. Flanged Fittings and Threaded Flanges: ASME B16.1.
      a. Standard Weight: Class 125.
      b. Extra Heavy: Class 250.

D. Unions: Malleable iron, 250 lb class, brass to iron or brass to brass seats.

E. Couplings: Same material and pressure rating as adjoining pipe, conforming to standards for fittings in such pipe. Use taper tapped threaded type in screwed pipe systems operating in excess of 15 psig.

F. Nipples: Same material and strength as adjoining pipe, except nipples having a length of less than one inch between threads shall be extra heavy.

2.02 DUCTILE IRON PIPE AND FITTINGS

A. Water Pipe: Bitumin coated and cement-mortar lined; AWWA C151.
   1. 3 and 4 Inch Sizes: Class 51.
   2. 6 inch Size and Over: Class 50.

B. Fittings: Bitumin coated and cement-mortar lined; AWWA C110.

2.03 COUPLINGS AND FITTINGS FOR CUT GROOVED END PIPE

A. Couplings: Grinnell Corp.'s Rigidlok Fig. 7401, or Victaulic Co.'s Zero-Flex Flush seal –Grade "E" EPDM Type A, Style 07, having minimum pressure rating of:
   1. 750 psi from 1-1/2 inch to 4 inch.
   2. 700 psi for 6 inch.
   3. 600 psi for 8 inch.

B. Gaskets: Similar to Victaulic's Flush seal –Grade "E" EPDM, Type A or approved equal.

C. Fittings: By same manufacturer as couplings, having pressure ratings equal to or greater than couplings. Comply with the following standards:
   1. Steel: ASTM A 53 or A 106, Grade B.
   2. Malleable Iron: ASTM A 47.
   3. Ductile Iron: ASTM A 536.

2.04 BOLTED MECHANICAL BRANCH CONNECTION

A. Victaulic Co.'s 920 Mechanical T.

2.05 JOINING AND SEALANT MATERIALS

A. Thread Sealant:
   1. LA-CO Industries' Slic-Tite Paste with Teflon.
   2. Loctite Corp.'s No. 565 Thread Sealant.
   3. Thread sealants for potable water shall be NSF approved.

B. Joint Packing:
   1. Oiled Oakum: Manufactured by Nupak of New Orleans, Inc., 931 Daniel St., Kenner, LA 70062, (504) 466-1484.

C. Gaskets For Use With Ductile Iron Water Pipe: Synthetic rubber rings (molded or tubular): Clow Corp.'s Belltite, Tyler Pipe Industries Inc.'s Ty-Seal, or U.S. Pipe and Foundry Co.'s Tyton.

D. Flange Gasket Material:
   1. For Use With Cold Water: 1/16 inch thick rubber.

E. Gaskets For Use With Grooved End Pipe and Fittings: Type and materials as recommended and furnished by the fitting manufacturer, for the service of piping system in which installed.

F. Anti-Seize Lubricant: Bostik Inc.'s Never Seez or Dow Corning Corp.'s Molykote 1000.

2.06 DIELECTRIC CONNECTORS

A. Dielectric Fitting: Bronze ball valve with end connections and pressure rating to match associated piping.
   1. Nipples with inert non-corrosive thermoplastic linings are not acceptable.

B. Flange Electrical Insulation Kit: Consisting of dielectric sleeves and washers, and dielectric gasket.
   1. Rated 150 psi at 250 degrees F: ANSI Class 150, full faced neoprene gasket with bolt holes, double phenolic washers, and mylar sleeves; Model 150 by APS, Lafayette, LA 70596, (337) 233-6116.

2.07 PACKING MATERIALS FOR BUILDING CONSTRUCTION PENETRATIONS

A. Oiled Oakum: Manufactured by Nupak of New Orleans, Inc., 931 Daniel St., Kenner, LA 70062, (504)466-1484.

B. Mechanical Modular Seals: Thunderline Corp.'s Link Seal wall and floor seals designed for the service of piping system in which installed.

2.08 PIPE SLEEVES

A. Type A: Schedule 40 steel pipe.

B. Type B: No. 16 gage galvanized sheet steel.

C. Type C: Schedule 40 steel pipe with 1/4 inch steel collar continuously welded to pipe sleeve. Size steel collars as required to span a minimum of one cell or corrugation, on all sides of the rough opening thru the metal deck.

D. Type D: No. 16 gage galvanized sheet steel with 16 gage sheet steel metal collar rigidly secured to sleeve. Size metal collars as required to span a minimum of one cell or corrugation, on all sides of the rough opening thru the metal deck.

2.09 FLOOR, WALL AND CEILING PLATES

A. Cast Brass: Solid type with polished chrome plated finish, and set screw.
   1. Series Z89 by Zurn, 929 Riverside Drive, Grosvenordale, CT 06255, (800) 243-1830.
   2. Model 127XXXX by Maguire Mfg., Cheshire CT 06410, (203) 699-1801.

B. Stamped Steel: Split type, polished chrome plated finish, with set screw.
   1. Figures 2 and 13 by Anvil International, Portsmouth, NH 03802, (603) 422-8000.

C. Cast Iron or Malleable Iron : Solid type, galvanized finish, with set screw:
   1. Model 395 by Anvil International, Portsmouth, NH 03802, (603) 422-8000.
   2. Model 900-016XX by Landsdale International, Westville, NJ 08093, (800) 908-0523.

PART 3 EXECUTION

3.01 INSTALLATION

A. Install piping at approximate locations indicated, and at maximum height.

B. Install piping clear of door swings, and above sash heads.

C. Make allowances for expansion and contraction.

D. Allow for a minimum of one inch free air space around pipe or pipe covering, unless otherwise specified.

E. Install horizontal piping with a constant pitch, and without sags or humps.

F. Install vertical piping plumb.

G. Use fittings for offsets and direction changes.

H. Cut pipe and tubing ends square; ream before joining.

I. Threading: Use American Standard Taper Pipe Thread Dies.

3.02 FIRE SPRINKLER PIPING SYSTEM

A. Install piping to be completely drainable.

3.03 PIPE JOINT MAKE-UP

A. Threaded Joint: Make up joint with a pipe thread compound applied in accordance with manufacturer's printed application instructions for the intended service.

B. Flanged Pipe Joint:
   1. Install threaded companion flanges on steel pipe; flanges on galvanized pipe are not required to be galvanized.
   2. Provide a gasket for each joint.
   3. Coat bolt threads and nuts with anti-seize lubricant before making up joint.

C. Rubber Ring Push-on Joint: Clean hub, bevel spigot, and make up joint with lubricated gasket in conformance with the manufacturer's printed installation instructions.

D. Grooved Pipe Joint: Cut groove pipe ends, make up joint with grooved end fittings and couplings, in conformance with the manufacturer's printed installation instructions.

E. Mechanical Joint: Make up joint in conformance with the manufacturer's printed installation instructions, with particular reference to tightening of bolts.

F. Dissimilar Pipe Joint:
   1. Joining Bell and Spigot and Threaded Pipe: Install a half coupling on the pipe or tube end to form a spigot, and calk into the cast iron bell.
   2. Joining Dissimilar Threaded Piping: Make up connection with a threaded coupling or with companion flanges.
   3. Joining Dissimilar Non-Threaded Piping: Make up connection with adapters recommended by the manufacturers of the piping to be joined.
   4. Joining Galvanized Steel Pipe and Copper Tubing: Make up connection with a dielectric connector.

3.04 PIPING PENETRATIONS

A. Sleeve Schedule: Unless otherwise shown, comply with the following schedule for the type of sleeve to be used where piping penetrates wall or floor construction:

	CONSTRUCTION	SLEEVE TYPE
1.	Foundation walls.	A*
2.	Non-waterproof interior walls.	B*
3.	Non-waterproof interior floors on metal decks.	D*
4.	Non-waterproof interior floors not on metal decks.	B*
5.	Floors not on grade having a floor drain.	A
6.	Floors over mechanical equipment, machine, and boiler rooms.	A
7.	Floors finished or to be finished with	D*

	latex composition or terrazzo, and on metal decks.	
8.	Floors finished or to be finished with latex composition or terrazzo, and not on metal decks.	A
9.	Earth supported concrete floors.	None Required
10.	Exterior concrete slabs on grade.	A
11.	Fixtures with floor outlet waste piping.	None Required
12.	Non-metal roof decks.	A
13.	Waterproof floors on metal decks.	D
14.	Waterproof floors not on metal decks.	A
15.	Waterproof walls.	A

*Core drilling is permissible in lieu of sleeves where marked with asterisks.

B. Diameter of Sleeves and Core Drilled Holes:
   1. Unless otherwise specified, size holes thru floors and walls in accordance with the through penetration fire stopping system being used.
   2. Size holes thru exterior walls or waterproofed walls above inside earth or finished floors, and exterior concrete slabs in accordance with the following:
      a. Uninsulated (Bare) Pipe: Inside diameter of sleeve or core drilled hole 1/2 inch greater than outside diameter of pipe, unless otherwise specified.
      b. Insulated Pipe: Inside diameter of sleeve or core drilled hole 1/2 inch greater than outside diameter of insulation, unless otherwise specified.
      c. Mechanical Modular Seals: Size holes in accordance with the manufacturer's recommendations.
   3. Size holes for sprinkler and fire standpipe piping in accordance with NFPA 13.

C. Length of Sleeves (except as shown otherwise on Drawings):
   1. Walls and Partitions: Equal in length to total finished thickness of wall or partition.
   2. Floors, Finished: Equal in length to total finished thickness of floor and extending 1/2 inch above the finished floor level, except as follows:
      a. In furred spaces at exterior walls, extend sleeve one inch above the finished floor level.
   3. Exterior Concrete Slabs: Equal in length to total thickness of slab and extending 1/2 inch above the concrete slab.
   4. Roofs: Equal in length to the total thickness of roof construction, including insulation and roofing materials, and extending one inch above the finished roof level.

D. Packing of Sleeves and Core Drilled Holes:
   1. Unless otherwise specified, pack sleeves or cored drilled holes in accordance with Section 078400 - FIRESTOPPING.

2. Pack sleeves in exterior walls or waterproofed walls above inside earth or finished floors with oakum to within 1/2 inch of each wall face, and finish both sides with Type 1C (one part) sealant. See Section 079200.
   a. Mechanical modular seals may be used in lieu of packing and sealant for sleeves and core drilled holes.
3. Pack sleeves in exterior concrete slabs with oakum to full depth, and within 1/2 inch of top of sleeve and finish the remainder with sealant. See Section 079200.
   a. Sealant Types:
      1) Piping Conveying Materials up to 140 degrees F other than Motor Fuel Dispensing System Piping: Type 1C (one part).
   b. Mechanical modular seals may be used in lieu of packing and sealant for sleeves and core drilled holes.

E. Weld metal collars of Type C and D sleeves to the upper surface of the metal deck. Seal voids under the metal collar as recommended by the manufacturer of the metal deck.

3.05 FLOOR, WALL AND CEILING PLATES

A. Install plates for exposed uninsulated piping passing thru floors, walls, ceilings, and exterior concrete slabs as follows:
1. Piping 2 Inch Size and Smaller In Finished Spaces:
   a. Solid Type: Chrome plated cast brass construction with set screw.
   b. Split Type: Chrome plated stamped steel construction with set screw.
2. Piping over 2 inch size In Finished Spaces, and Piping in Unfinished Spaces:
   a. Solid Type: Galvanized cast iron construction with set screw.
   b. Split Type: Chrome plated stamped steel construction with set screw.
3. Piping in Unfinished Spaces (Including Exterior Concrete Slabs): Solid type, galvanized, cast iron or malleable iron construction.
4. Fasten plates with set screws.
5. Plates are not required in pipe shafts or furred spaces.

3.06 PIPE AND FITTING SCHEDULE

A. Where options are given, choose only one option for each piping service. No deviations from the selected option will be allowed.

B. Wet Pipe Fire Sprinkler and and Simulated Standpipes:
1. Option No. 1: Standard weight black steel pipe, with standard weight cast iron fittings, and threaded joints.
2. Option No. 2: Standard weight black steel pipe, with cut grooved ends, grooved pipe fittings, and couplings.

C. Double Interlock Preaction/Dry Pipe Fire Sprinkler Systems:
   1. Option No. 1: Schedule 40, galvanized steel pipe, with standard weight galvanized malleable iron threaded fittings, and threaded joints.
   2. Option No. 2: Scheduled 40, galvanized steel pipe, with cut grooved ends, grooved pipe fittings, and couplings.

D. Sprinkler (Below Ground): Coated ductile iron water pipe and fittings, with mechanical or push-on joints.

E. Fire Standpipe Simulated.
   1. Option No. 1: Standard weight black steel pipe, with standard weight cast iron fittings, and threaded joints.
   2. Option No. 2: Standard weight black steel pipe, with roll grooved ends, grooved pipe fittings, and couplings.
   3. Install piping as shown on contract drawings P-100 through P103, and P-300.
   4. Standpipe Systems are simulation only and shall have no water connected to them.
   5. These systems are not shown on the FP drawings to prevent any confusion as to the fact that they are inactive, non functioning systems.

END OF SECTION

SECTION 211313

SPRINKLER SYSTEMS

PART 1 GENERAL

1.01 RELATED WORK SPECIFIED ELSEWHERE

A. Painting: Section 099103.

B. Backflow Preventers: Section 221118.

C. Hangers and Supports: Section 220529.

D. Sprinkler Piping: Section 221100.

E. Wiring for Motors and Motor Controllers: Section 260523.

F. Motors and Motor Controllers: Section 260221.

1.02 REFERENCES

A. NFPA 13 - National Fire Protection Association Standard for the Installation of Sprinkler Systems.

1.03 SYSTEM DESCRIPTION

A. Type of System:
   1. Wet System - Hydraulic calculations.
   2. Double Interlock Preaction Dry System - Hydraulic calculations.
   3. Simulated Stand Pipe System – No Hydraulic calculations required as the Stand pipes are nonfunctional. See P-100 through P-103 drawings for locations and P-300 for detail.

   .

B. Occupancy Classification:
   1. Light Hazard Occupancy.
      a. Corridors.
      b. Classrooms.
      c. Training Rooms.
      d. Class Toilet Rooms.
      e. Lobby and Training Corridor.
      f. Training Conference Room
      g. Training Offices
   2. Ordinary Hazard Occupancy.
      a. All areas unless otherwise noted
   3. Extra Hazard Occupancy.
      a. Simulations Storage

1.04 SUBMITTALS

A. Shop Drawings:
   1. Complete sprinkler system layout indicating the locations of sprinkler heads, devices, and accessories. Include separate details of special or not easily visualized piping arrangements and inspector's test valves and connections.
   2. Hydraulic calculations shall be complete and cross referenced to the appropriate drawing sheets.

B. Product Data: Catalog sheets, specifications, and installation instructions. Indicate UL or FM approval for each product. Include the following additional information:
   1. Electrical Devices: Complete description of intended use, wiring diagrams, data plate information and, in the case of switching devices, whether normally on, or normally off. Include motor test data.
   2. Mechanical Devices: Complete description of intended use, including normal operating capacities and working pressures.
   3. Enclosures: Dimensions, materials, gages of metals; type of door hinges and locks, and methods of securing the enclosure members to the building construction.
   4. Hose Threads: Verify that hose threads on fire department connections match threads on equipment used by the local or servicing fire department.

C. Quality Control Submittals:
   1. Design Data: The portions of the sprinkler system not sized on the Contract Drawings shall be sized in accordance with NFPA requirements for Hydraulically Designed Systems. Submit drawings and hydraulic calculations for approval.
   2. Certificates: As required under Quality Assurance Article.
   3. Installers Qualification Data:
      a. Name of each person who will be performing the Work.
      b. Upon request, furnish names and addresses of the required number of similar projects that each person has worked on which meet the experience criteria.

D. Contract Closeout Submittals:
   1. Operation and Maintenance Data. Deliver 2 copies to the Director's Representative:
      a. Instruction manual describing the operation and maintenance of the system.
      b. Parts list for each mechanical and electrical device.
      c. Publication NFPA 25, Inspection, Testing, and Maintenance of Water Based Fire Protection Systems.

1.05 QUALITY ASSURANCE

A. Qualifications: The persons employed to perform the Work of this Section and their supervisor shall be personally experienced in sprinkler work and shall have been regularly performing such work for a minimum of 5 years while in the employ of a company or companies engaged in the installation of sprinkler systems.
   1. Upon request, furnish to the Director the names and addresses of five similar projects which the foregoing people have worked on during the past 3 years.

B. Regulatory Requirements:
   1. Materials for the Work of this Section shall be Underwriter's Laboratories listed, and/or Factory Mutual approved.

C. Certification: NFPA Contractor's Material and Test Certificate.

1.06 MAINTENANCE

A. Spare Parts: Furnish the following items and deliver to the Director's Representative for storage in spare sprinkler head cabinets:
   1. Spare sprinkler heads of required temperature range as follows:

QUANTITY	TYPE
6	Standard Pendent
6	Pendent Institutional
6	Upright Institutional
6	Upright QR
6	Sidewall Institutional

   2. One sprinkler head wrench to fit each type sprinkler head listed above.

PART 2 PRODUCTS

2.01 VALVES AND ACCESSORIES

A. Gate Valves (175 psig non-shock working pressure):
   1. 3/4 inch to 2 inch: Bronze body, OS & Y indicating type; double or wedge disc with threaded ends.
   2. 2-1/2 inch and larger: IBBM, OS & Y indicating type; double or wedge disc with end connections as required to suit the piping system.

B. Inspector's Test Outlet Valve: Ball type, bronze body, Type 316 stainless steel ball and stem, teflon seats and stem packing, 400 psi WOG. Valve shall have padlocking feature in both the open and closed position.

C. Valve Locking Devices:
   1. Chain: 3/16 inch galvanized steel, welded link.
   2. Padlock: Series 800 by Yale, Eaton Corp., Charlotte, NC: Key all locks alike. Furnish 2 keys for each lock.
   3. Key Tags: 1-1/2 inch dia., brass, stamped with valve number and service.
   4. "S" Hooks: Brass, for securing keys to key tags.

D. Alarm Check Valve:
   1. Two piece cast iron body, bolted and gasketed.
   2. Moving parts brass, bronze, or stainless steel with replaceable rubber clapper facing.
   3. Right or left hand trimming as required.
   4. Suitable for horizontal or vertical installation.
   5. Two pressure gages.
   6. Main drain tap.
   7. Alarm retarding chamber for water motor alarm device and electric alarm pressure switch.
      a. Pressure switch: Equip with spst or spdt contacts rated 10 Amps at 110 V ac, adjustable differential, range as required; NEMA Type 12 enclosure.
   8. Factory finish with corrosion resistant red paint.
   9. Trim Package: Angle valve, globe valve, alarm line strainer, orifice restriction, pipe nipples and fittings.

E. Butterfly Valves:
   1. Type BF: Iron body, flangeless wafer or lugged type, (lug for each bolt hole, drilled and tapped for cap screws), with replaceable reinforced resilient EPT (EPDM) seats, bronze or nickel plated ductile iron discs, phosphate coated steel or stainless steel stems, and raised necks able to accommodate 2 inches of insulation. Acceptable Manufacturers: Crane, Demco, De Zurik, Hammond, Keystone, Milwaukee, Nibco, Stockham, and Watts.
      a. Pressure Ratings:
         1) 200 psig WOG at 275 degrees F.
   3. Operators:
      a. 6 inch size and Less: Manual actuator handles with external indication of disc position, and suitable means of locking actuator in any fixed position.
      b. 8 inch size and Up: Worm gear operator.

F. Double Interlock Preaction Dry Pipe Valve:
   1. Two piece cast iron body, bolted and gasketed.
   2. Moving parts brass, bronze, or stainless steel with replaceable rubber clapper facing.
   3. Hand hole cover.
   4. Right or left hand trimming as required.
   5. Standard dry valve trim.
   6. Water pressure gage and air pressure gage.

7. Electric alarm pressure switch: Equip with spst or spdt contacts rated 10 Amps at 110 V ac, adjustable differential range as required; NEMA Type 12 enclosure.
8. Factory finish with corrosion resistant red paint.
9. Quick opening device (accelerator) with integral anti-flood assembly: By the dry pipe valve manufacturer.

G. Pressure Gages: Range of 2 times system working pressure at point where installed. Equip with gage cock and provisions for draining.

H. Inspector's Test Connection: Cast brass, capped, sprinkler line tester fitting; Elkhart Brass Mfg. Co.'s. No. 112, or Seco Mfg., Inc.'s No. 445 or 446.

2.02 SPRINKLER HEADS AND APPURTENANCES

A. Sprinkler Heads: Brass or bronze, with standard 1/2 inch orifice, and deflector:
1. Standard Upright or Pendent Type: Deflector designed to distribute water downward in a uniform hemispherical spray pattern, 1/2" NPT, 165°F, Chrome Plated, 5.6 K Factor.
   Style.A: Flat escutcheon (for rooms with recessed lighting).
   Style B: Conical escutcheon (for rooms with surface mounted lighting).
2. Pendent Institutional: Tyco, Raven, EC Pendent . with1/2" NPT, 165°F, Chrome Plated, 5.6 K Factor
   Style A: Flat escutcheon (for rooms recessed lighting).
   Style B: Conical escutcheon (for rooms with surface mounted lighting).
3. Upright Institutional: Tyco TY-FRL Exposed, 1/2" NPT, 165°F, Chrome Plated, 5.6 K Factor.
4. Upright QR: Tyco TY-FRB Exposed, 3/4" NPT, 165°F, Chrome Plated, 8.0 K Factor.
5. Sidewall Institutional: Horizontal or vertical sprinklers with special deflectors designed to discharge most of the water away from nearby wall in a pattern resembling 1/4 of a sphere with a small portion of discharge directed at wall behind sprinkler, 1/2" NPT, 165°F, Chrome Plated, 5.6 K Factor.
6. Markings: Stamp sprinkler type on deflector in addition to NFPA's color code requirements covering temperature classification.
7. Finish:
   a. Finish: Chrome

B. Escutcheons:
1. Material: Brass
2. Finish: Chrome

C. Sprinkler Guards For Exposed Piping: Welded steel wire cage with cast or pressed steel base plate and suitable retaining clamps.
1. Finish: Paint to match sprinkler piping.
2. Install as noted on drawings.

D. Spare Sprinkler Head Cabinet: Steel, with hinged cover, constructed of minimum 20 gage material and fitted with 16 gage steel racks designed to hold quantities and types of spare sprinkler heads and sprinkler head wrenches.
   1. Finish: Bright red, baked on enamel.

2.03 FIRE DEPARTMENT CONNECTION

A. Single Connection: Flush wall type, brass with a polished finish; 2-1/2 x 3 inch female connection with plug, chain and escutcheon.

B. Identification: Cast the word on escutcheon.

2.04 WATER FLOW ALARM DEVICE

A. Wet System:
   1. Vane Type Waterflow Switch: Autocall Div., Federal Signal Corp.'s 4160, Potter Electric Signal Co.'s VSR-F, or Reliable's Model A., having:
      a. Corrosion-resistant vane.
      b. Splash/dust resistant enclosure with anti-tamper switch.
      c. Adjustable pneumatic retard.
      d. Screw type wiring terminals.
      e. Switch rated minimum 7.0 amps at 125 V ac and 0.25 amps at 125 V dc.

   B. Dry System: Pressure actuated switch designed to detect increase and decrease from normal system pressure in dry pipe systems. Potter Electric Signal's PS40-2, with BVL bleeder valve, and cover tamper switch:

2.05 WATER MOTOR ALARM

A. Construction: Weather-proof, steel rotary clapper, brass or aluminum gong, 8 inch minimum diameter provided with a protecting hood, removable brass inlet strainer, 3/4 inch alarm line and 1 inch drain.

B. Finish: BRASS GONG - red enamel.

2.06 ELECTRIC ALARM GONG

A. 6 inch diameter vibrating bell; 120 V ac. Sound rating 92 db at 10 feet minimum; Viking's 03115BA or Edward's 438-6N5.
   1. Markings: The words FIRE ALARM in block lettering on a contrasting background.
   2. Mounting: Suitable for both wall and ceiling mounting.

2.07 VALVE SUPERVISORY SWITCHES

A. Mechanically actuated, designed to close contacts and sound an alarm when supervised valve is closed and when switch cover removed.
   1. For Gate Valves: Potter Electric Signal Co.'s OSYSU-A, or Grinnell's F640.
   2. For Post Indicator Valves: Potter Electric Signal Co.'s PIVSU-A2, or Potter-Roemer, Inc.'s 6223.

2.08 AIR PRESSURE SUPERVISORY SWITCH

A. Pressure actuated switch designed to detect increase and decrease from normal system pressure in dry pipe systems. Potter Electric Signal's PS40-2, with BVL bleeder valve, and cover tamper switch.

2.09 AIR COMPRESSOR TANK MOUNTED

A. Capacity: Adequate to pressurize system in accordance with instruction sheet furnished with the dry pipe valve, or 20 psi in excess of calculated trip pressure of dry pipe valve. System pressurization time: 30 minutes or less. System shall be UL Listed, Oil-less Piston Air Compressor with Tank designed for Dry Pipe Sprinkler Systems.

B. Base Plate Mounted Compressor: Design Basis: General Air Products, Base Model L620100, Tank Model LT620100
   1. Electric motor driven, open drip proof motor.
   2. V belt drive or integral motor-compressor unit.
   3. Belt guard and slide rails (belt driven models).
   4. Intake filter-silencer.
   5. Shut-off valve and safety valve.
   6. Pressure gage.
   7. Vibration isolators.
   8. Electric motor driven, air cooled single stage, oil-less compressor, with air filter, and safety relief valve.
   9. Rating: 1 horsepower 7.6 cfm at 40 psi.
   10. Electrical: 208Vac, 60 Hz, 3 Phase.
   11. Stainless steel mounting bracket, with adjustable stainless steel straps (for all pipe sizes).
   12. ASME Coded Tank Package: 30 gallon t with gauge , pressure switch, shut off valve, drain valve check valve and safety valve.
   13. **FINAL SYSTEM AIR COMPRESSORS SIZE AND CAPACITIES SHALL BE BASED ON THE LOCAL 'AUTHORITY HAVING JURISDICTIONS' APPROVED CONTRACTOR SUBMITTED DRY PIPE SPRINKLER SYSTEM LAYOUTS AND SYSTEM DESIGN CAPACITIES.**
   14. Provide concrete house-keeping pad 4" high and 6" wider in all directions than air compressor and accessories.

C. Automatic Air Maintenance Device: Reliable Automatic Sprinkler Co.'s Model B; includes electrical pressure switch with unloader valve, check valve, restrictor, strainer, shut off valves, bypass valve, and necessary fittings.

2.10 DOUBLE INTERLOCK PREACTION FIRE SUPPRESSION SYSTEM

A. Double Interlock Preaction fire suppression systems shall be:
   1. Designed based on NFPA 13 guide lines of Dry pipe sprinkler systems.
   2. System shall use Double Interlock Preaction Automatic Control Valve design interlocked with automatic control system mounted in Control Room

2.11 SIGNS

A. Steel with vitreous enamel finish, lettering on contrasting background to identify and indicate the function of:
   1. Control valves.
   2. Drain, test, air supply and alarm check valves.
   3. Water motor alarm.
   4. Hydraulic Design Nameplate Data: Size approx. 9 x 12 inches, inscribed with the following::
      a. DOUBLE INTERLOCK PREACTION DRY PIPE SPRINKLER SYSTEM HYDRAULICALLY DESIGNED (in block letters).
      b. Location and area of hydraulically designed section.
      c. Discharge density over designed area in gallons per minute.
      d. Residual pressure at base of riser supplying water to designed section.
   5. Simulated Stand Pipe Data: Size approx. 9 x 12 inches, inscribed with the following::
      a. STAND PIPE – NON-FUCTIONAL - SIMULATION ONLY.

PART 3 EXECUTION

3.01 INSTALLATION

A. Unless otherwise shown or specified, install the Work of this section in accordance with NFPA 13, and the item manufacturer's installation instructions.

B. Base Plate Air Compressor: Mount on a concrete pad. Level, grout-in and secure compressor and motor.

C. Locking Valves:
   1. Lock gate valves in open position with chain looped through handwheel and around adjacent sprinkler pipe. Secure with padlock.
   2. Lock test outlet valve in closed position with padlock.

E. Spare Sprinkler Head Cabinet: Secure to building wall or other permanent structure in vicinity of main valve controlling sprinkler system, unless otherwise directed.

F. Connection to Existing Main: A bolted mechanical branch connection may be used. Refer to Section 221100.

G. Signs: Install signs identifying the following:
   1. Valves: One for each size, type and function.
   2. Water Motor Alarm.
   3. Hydraulically Designed System.

3.04 FIELD QUALITY CONTROL

A. Tests: Unless otherwise shown or specified, perform tests in accordance with NFPA 13.
   1. Flushing: In addition to the requirements of the Standard, flush new piping before making final connection to existing systems and before performing hydrostatic test. Flush at rates of flow prescribed in the Contractor's Material and Test Certificate. After making final connections, flush entire system and assure that debris is removed from piping and there are no stoppages or obstructions in the system.
   2. System Tests:
      a. Test all new Work.
      b. Notify the Director's Representative when the Work of this Section is ready for testing.
      c. Perform the tests when directed, and in the Director's Representatives presence.

END OF SECTION

SECTION 224500

EMERGENCY PLUMBING FIXTURES

PART 1 - GENERAL

1.01 DEFINITIONS

A. Accessible Fixture: Emergency plumbing fixture that can be approached, entered, and used by people with disabilities.

B. Plumbed Emergency Plumbing Fixture: Fixture with fixed, potable-water supply.

C. Tepid: Moderately warm.

1.02 SUBMITTALS

A. Product Data: For each type of product indicated. Include flow rates and capacities, furnished specialties, and accessories.

B. Operation and maintenance data.

1.03 QUALITY ASSURANCE

A. ANSI Standard: Comply with ANSI Z358.1, "Emergency Eyewash and Shower Equipment."

B. Regulatory Requirements: Comply with requirements in ICC A117.1, "Accessible and Usable Buildings and Facilities"; Public Law 90-480, "Architectural Barriers Act"; and Public Law 101-336, "Americans with Disabilities Act"; for plumbing fixtures for people with disabilities.

C. NSF Standard: Comply with NSF 61, "Drinking Water System Components--Health Effects," for fixture materials that will be in contact with potable water.

PART 2 - PRODUCTS

2.01 EMERGENGY SHOWER/EYEWASH COMBINATION UNITS

A. Combination Units, ES-1:
   1. Manufacturers: Subject to compliance with requirements, provide products by one of the following:
      a. Bradley Corporation.
      b. Encon Safety Products.
      c. Guardian Equipment Co.

d. Speakman Company.

2. Description: Plumbed, accessible, freestanding, with emergency shower and eye/face wash equipment.
   a. Piping: Chrome-plated brass or stainless steel.
      1) Unit Supply: NPS 1-1/4 minimum from top.
      2) Unit Drain: Outlet at side near bottom.
      3) Shower Supply: NPS 1 with flow regulator and stay-open control valve.
      4) Eye/Face Wash Supply: NPS 1/2 with flow regulator and stay-open control valve.
   b. Shower Capacity: Deliver potable water at rate not less than 20 gpm for at least 15 minutes.
      1) Control-Valve Actuator: Pull rod.
      2) Shower Head: 8-inch minimum diameter, chrome-plated brass or stainless steel.
   c. Eye/Face Wash Equipment: With capacity to deliver potable water at rate not less than 3.0 gpm for at least 15 minutes.
      1) Control-Valve Actuator: Push bar.
      2) Receptor: Chrome-plated brass or stainless-steel bowl.

2.01 WATER-TEMPERING EQUIPMENT

A. Water-Tempering Equipment, **TMV-1.**

1. Manufacturers: Subject to compliance with requirements, provide products by one of the following:
   a. Bradley Corporation.
   b. Encon Safety Products.
   c. Haws Corporation.
   d. Lawler Manufacturing Co., Inc.
   e. Leonard Valve Company.
   f. Powers, a Watts Industries Co.
   g. Speakman Company.
2. Description: Factory-fabricated, hot- and cold-water-tempering equipment with thermostatic mixing valve.
   a. Thermostatic Mixing Valve: Designed to provide 85 deg F tepid, potable water at emergency plumbing fixtures, to maintain temperature at plus or minus 5 deg F throughout required 15-minute test period, and in case of unit failure to continue cold-water flow, with union connections, controls, metal piping, and corrosion-resistant enclosure.

PART 3 EXECUTION

3.01 INSTALLATION

A. Assemble emergency plumbing fixture piping, fittings, control valves, and other components.

B. Install fixtures level and plumb.

C. Fasten fixtures to substrate.

D. Install shutoff valves in water-supply piping to fixtures. Use ball, gate, or globe valve if specific type valve is not indicated. Install valves chained or locked in open position if permitted. Install valves in locations where they can easily be reached for operation. Retain one or both exceptions in subparagraphs below if applicable.
   1. Exception: Omit shutoff valve on supply to group of plumbing fixtures that includes emergency plumbing fixture.
   2. Exception: Omit shutoff valve on supply to emergency equipment if prohibited by authorities having jurisdiction.

E. Install dielectric fitting in supply piping to fixture if piping and fixture connections are made of different metals.

F. Install thermometers in supply and outlet piping connections to water-tempering equipment.

G. Install escutcheons on piping wall and ceiling penetrations in exposed, finished locations.

H. Install equipment nameplates or equipment markers on fixtures and equipment signs on water-tempering equipment.

I. Piping installation requirements are specified in other Division 22 Sections. Drawings indicate general arrangement of piping, fittings, and specialties.

J. Connect hot- and cold-water-supply piping to hot- and cold-water-tempering equipment. Connect output from water-tempering equipment to emergency plumbing fixtures.

L. Adjust or replace fixture flow regulators for proper flow.

M. Adjust equipment temperature settings.

END OF SECTION

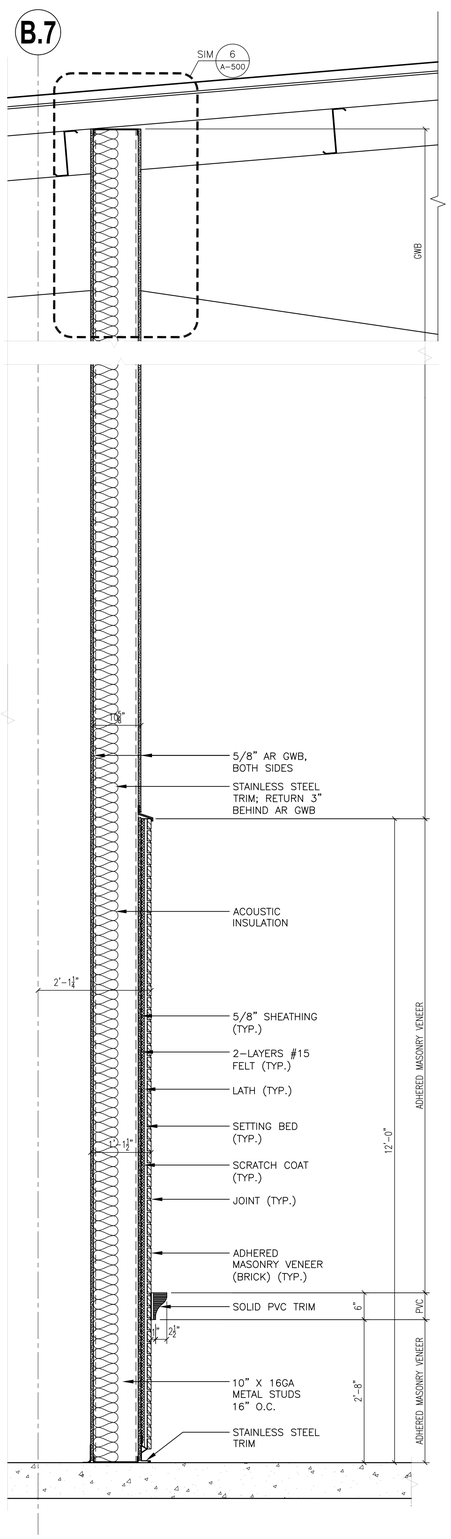

1 WALL SECTION – COURTROOM
A-309 3/4" = 1'-0"

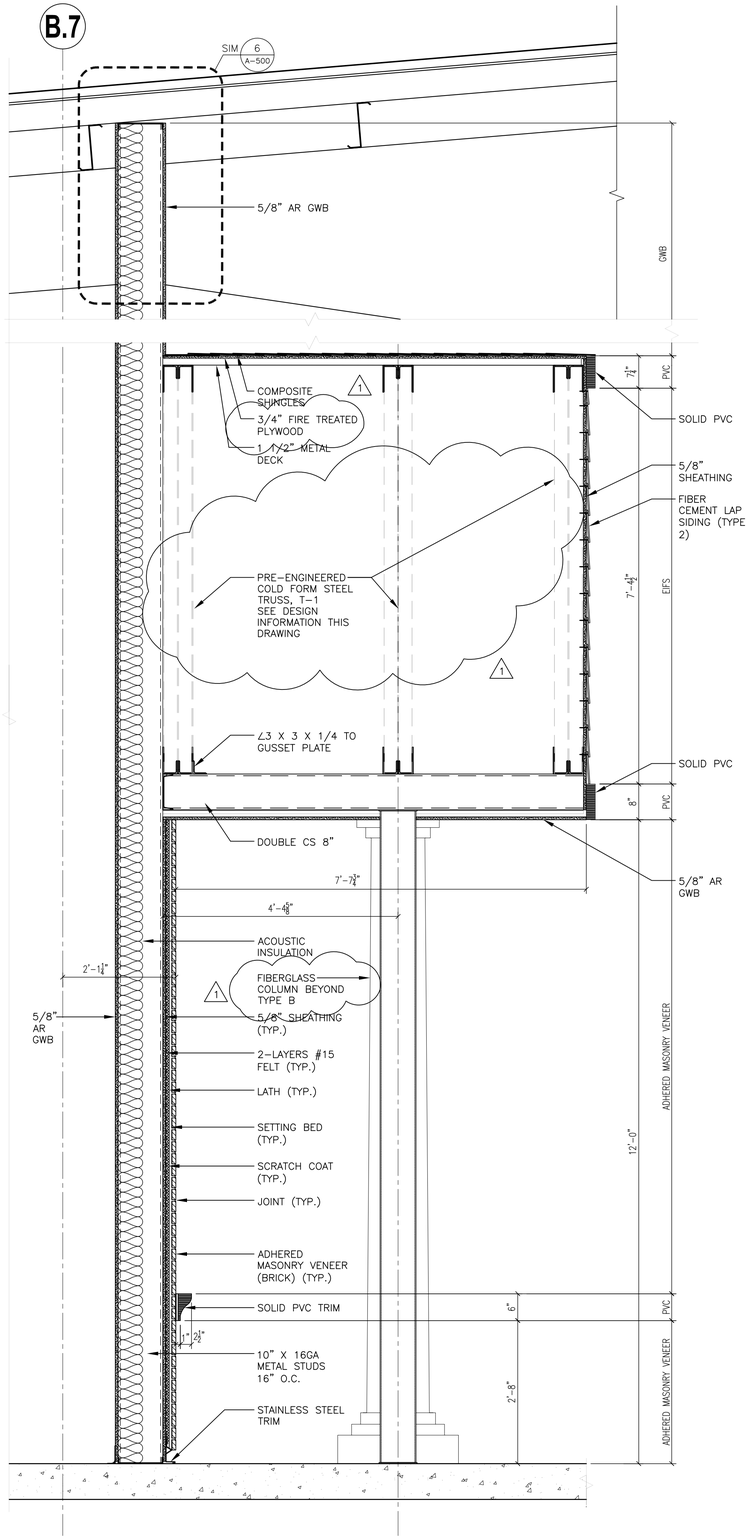

2 WALL SECTION – COURTROOM
A-309 3/4" = 1'-0"

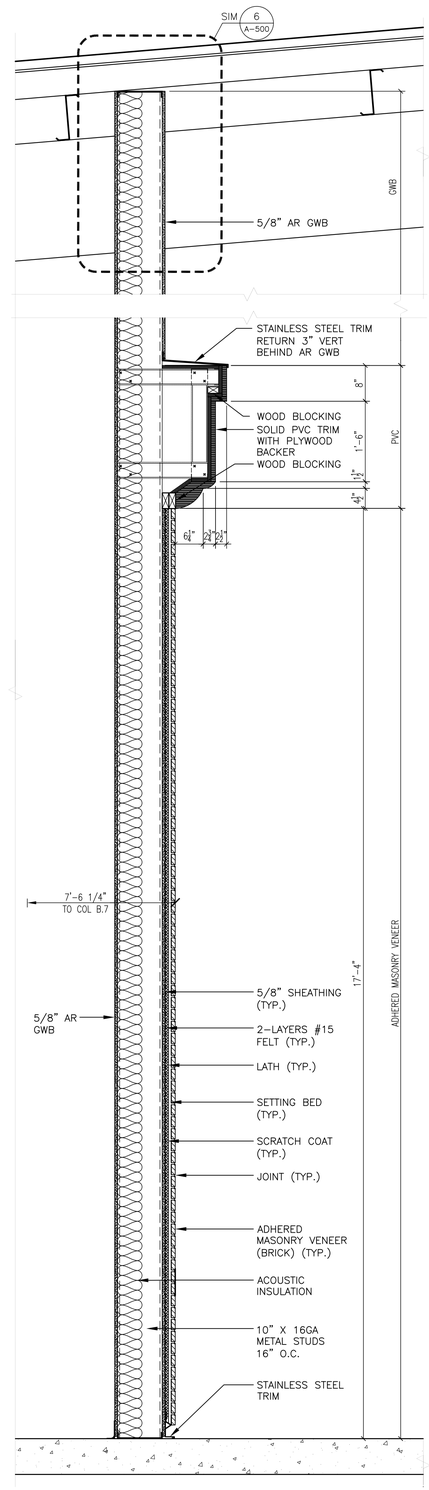

3 WALL SECTION – CLARK'S CAFE
A-309 3/4" = 1'-0"

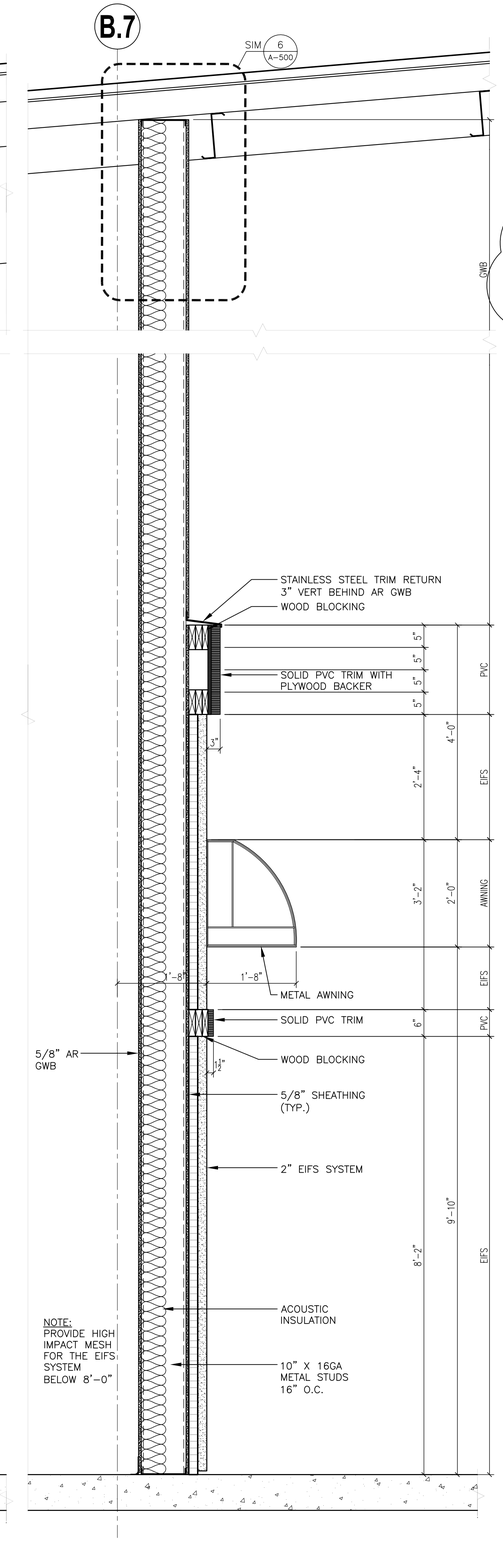

4 WALL SECTION – READMORE BOOKS
A-309 3/4" = 1'-0"

Sep 07,2012 – 11:45am
V:\Designs\dDcnstr\P4DbA\44014\CadArch\A-309.dwg
36x24 PLOT SHEET

NYS OFFICE OF GENERAL SERVICES

Serving New York

ANDREW M. CUOMO
Governor
ROANN M. DESTITO
COMMISSIONER
JAMES M. DAVIES, A.I.A.
Deputy Commissioner, Design and Construction

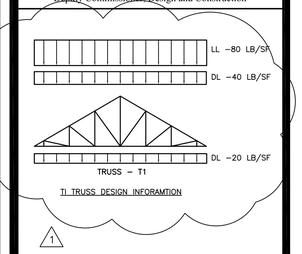

WARNING:
THE ALTERATION OF THIS MATERIAL IN ANY WAY, UNLESS DONE UNDER THE DIRECTION OF A COMPARABLE PROFESSIONAL, I.E. ARCHITECT FOR AN ARCHITECT, ENGINEER FOR AN ENGINEER OR LANDSCAPE ARCHITECT FOR A LANDSCAPE ARCHITECT, IS A VIOLATION OF THE NEW YORK STATE EDUCATION LAW AND/OR REGULATIONS AND IS A CLASS 'A' MISDEMEANOR.

LICENSED ARCHITECT TODD ROBERT HUTZ 035136 STATE OF NEW YORK

CONTRACT:
CONSTRUCTION

TITLE:
PROVIDE CITYSCAPE COMPLEX

LOCATION:
STATE PREPAREDNESS TRAINING CENTER
5900 AIRPORT ROAD
ORISKANY, NY 13424

CLIENT:
DIVISION OF HOMELAND SECURITY & EMERGENCY SERVICES

REVISED DRAWING
09/05/2012

MARK	DATE	DESCRIPTION
1	09/5/2012	ADDENDUM NO 6
	07/05/2012	FINAL SUBMISSION

PROJECT NUMBER:	44014– C
DESIGNED BY:	XXXXX
DRAWN BY:	XXXXX
FIELD CHECK:	XXXXX
APPROVED:	XXXXX

SHEET TITLE:
WALL SECTIONS

DRAWING NUMBER:
A–309

SHEET X OF X

DOOR SCHEDULE

DOOR NO	ROOM NAME	DOOR SIZE WD X HGT	DOOR THK	DOOR TYPE	DOOR MATL	FRAME TYPE	FRAME MATL	FRAME DETAIL HEAD	FRAME DETAIL JAMB	FRAME DETAIL SILL	GLAZING TYPE	FIRE RATING	DOOR HAND	HDWE GRP	REMARKS	DOOR NO
100	BREAK ROOM	3'-0" x 7'-0"	1 3/4"	FNV	STL	A	STL	1/A-602	2/A-602	--	D	--	--	10	--	100
101	LOBBY	PR 3'-0" x 7'-0"	1 3/4"	2HG	ALM	C	ALM	13/A-602	14/A-602	11&12/A-602	M	--	--	1	--	101
101A	CLOSET	3'-0" x 7'-0"	1 3/4"	F	STL	A	STL	1/A-602	2/A-602	--	--	--	--	10A	--	101A
101B	STAIR 1	3'-0" x 7'-0"	1 3/4"	F	STL	A	STL	1/A-602	2/A-602	--	--	--	--	4A	--	101B
102	OFFICE	3'-0" x 7'-0"	1 3/4"	FNV	STL	A	STL	1/A-602	2/A-602	--	D	--	--	9	--	102
103	OFFICE	3'-0" x 7'-0"	1 3/4"	FNV	STL	A	STL	1/A-602	2/A-602	--	D	--	--	9	--	103
104	JAN CL	3'-0" x 7'-0"	1 3/4"	F	STL	A	STL	1/A-602	2/A-602	--	--	--	--	10	--	104
105	WOMEN'S TOILET	3'-0" x 7'-0"	1 3/4"	F	STL	A	STL	1/A-602	2/A-602	--	--	--	--	22	--	105
106	MEN'S TOILET	3'-0" x 7'-0"	1 3/4"	F	STL	A	STL	1/A-602	2/A-602	--	--	--	--	22	--	106
107	NOT USED	--	--	--	--	--	--	--	--	--	--	--	--	-	--	107
108	NOT USED	--	--	--	--	--	--	--	--	--	--	--	--	-	--	108
109A	TRAINING RM	3'-0" x 7'-0"	1 3/4"	F	STL	B	STL	1/A-603	2/A-603	--	--	--	--	6	--	109A
109B	TRAINING RM	3'-0" x 7'-0"	1 3/4"	FNV	STL	A	STL	1/A-602	2/A-602	--	D	--	--	11	--	109B
109C	STORAGE	3'-0" x 7'-0"	1 3/4"	F	STL	A	STL	1/A-602	2/A-602	--	--	--	--	10	--	109C
110	CONTROL RM	3'-0" x 7'-0"	1 3/4"	F	STL	A	STL	1/A-602	2/A-602	--	--	--	--	8	--	110
111	TRAINING RM	3'-0" x 7'-0"	1 3/4"	FNV	STL	A	STL	1/A-602	2/A-602	--	D	--	--	11	--	111
B-112	CLASSROOM 3	SEE BREACH DOOR SPECIFICATION		--	--	--	--	5/A-605	6/A-605	--	--	--	--	--	ARRY TYPE BREACH DOOR	B-112
113	CLASSROOM 2	3'-0" x 7'-0"	1 3/4"	FNV	STL	A	STL	1/A-602	2/A-602	--	S-1	--	--	12	--	113
114	PRINCIPAL'S OFF	3'-0" x 7'-0"	1 3/4"	FNV	STL	A	STL	1/A-602	2/A-602	--	S-1	--	--	9	--	114
115A	ELEC CL	2'-0" x 7'-0"	1 3/4"	F	STL	A	STL	1/A-602	2/A-602	--	--	--	--	10	--	115A
115B	CORRIDOR	PR 3'-0" x 7'-0"	1 3/4"	F	STL	A	STL	1/A-602	2/A-602	--	--	--	--	5	OUT OF PLAY SIGNAGE	115B
115C	CORRIDOR	PR 3'-0" x 7'-0"	1 3/4"	F	STL	B	STL	1/A-603	2/A-603	--	--	--	--	5	--	115C
116A	CLASSROOM 1	3'-0" x 7'-0"	1 3/4"	FNV	STL	A	STL	1/A-602	2/A-602	--	S-1	--	--	12	--	116A
116B	CLASSROOM 1	3'-0" x 7'-0"	1 3/4"	F	STL	A	STL	1/A-602	2/A-602	--	--	--	--	10	--	116B
117	SIM STORAGE	3'-0" x 7'-0"	1 3/4"	F	STL	B	STL	3/A-602	4/A-602	--	--	3/4 HR	--	8	--	117
118	MOTEL LOBBY	3'-0" x 7'-0"	1 3/4"	F	STL	A	STL	1/A-602	2/A-602	--	--	--	--	4	--	118
119A	BATH	2'-8" x 6'-8"	1 3/4"	E6W	STL	A	STL	1/A-602	2/A-602	--	--	--	--	15	--	119A
119B	CLOSET	PR 2'-0" x 6'-8"	1 3/8"	F	STL	G	STL	9/A-602	10/A-602	--	--	--	--	20	HUNG SLIDING DOORS	119B
B-119C	MOTEL RM	SEE BREACH DOOR SPECIFICATION		--	--	--	--	5/A-605	6/A-605	--	--	--	--	--	RAM TYPE BREACH DOOR	B-119C
120A	CLOSET	PR 2'-0" x 6'-8"	1 3/8"	F	STL	G	STL	9/A-602	10/A-602	--	--	--	--	20	HUNG SLIDING DOORS	120A
120B	BATH	2'-8" x 6'-8"	1 3/4"	E6W	STL	A	STL	1/A-602	2/A-602	--	--	--	--	15	--	120B
120C	MOTEL RM	3'-0" x 6'-8"	1 3/4"	F	STL	A	STL	5/A-603	6/-603	--	--	--	--	14A	--	120C
121A	COURTROOM	PR 3'-0" x 7'-0"	1 3/4"	F	STL	A	STL	5/A-602	6/A-602	--	--	--	--	16	--	121A
121B	COURTROOM	3'-0" x 7'-0"	1 3/4"	F	STL	A	STL	5/A-602	6/A-602	--	--	--	--	10	--	121B
121C	JUDGE'S CHAM	3'-0" x 7'-0"	1 3/4"	F	STL	A	STL	5/A-602	6/A-602	--	--	--	--	9	--	121C
122A	BANK	3'-0" x 7'-0"	1 3/4"	F	STL	A	STL	5/A-602	6/A-602	--	--	--	--	10	--	122A
122B	BANK	3'-0" x 7'-0"	1 3/4"	F	STL	A	STL	9/A-603	10/A-603	11/A-603	--	--	--	13	--	122B
122C	BANK	PR 3'-10" x 7'-0"	1 3/4"	E6	STL	F	STL	6/A-604	7/A-604	5/A-604	--	--	--	3A	--	122C
122D	BANK	3'-0" x 7'-0"	1 3/4"	F	STL	A	STL	5/A-602	6/A-602	--	--	--	--	10	--	122D
123	OFFICE	3'-0" x 7'-0"	1 3/4"	HG	STL	A	STL	5/A-602	6/A-602	--	S-1	--	--	1	--	123
B-124	OFFICE	SEE BREACH DOOR SPECIFICATION		--	--	--	--	5/A-605	6/A-605	--	--	--	--	--	HYDRAULIC TYPE BR	B-124
125	OFFICE	3'-0" x 7'-0"	1 3/4"	HG	STL	A	STL	5/A-602	6/A-602	--	S-1	--	--	9	--	125
126	JAIL/VAULT	3'-0" x 7'-0"	2 1/4"	BG	STL	--	STL	1/A-605	2/A-605	--	--	--	--	--	MANUAL SLIDING BAR GATE/GRILLAGE	126
127	NOT USED						--	--	--	--	--	--	--	--	--	127
128	CORRIDOR	3'-0" x 7'-0"	1 3/4"	F	STL	A	STL	5/A-602	6/A-602	--	--	--	--	10	--	128
129A	SECURITY		1 3/4"	E8	STL	B	STL	3/A-603	4/A-603	--	--	--	--	5	--	129A
129B	SECURITY	3'-0" x 7'-0"	1 3/4"	F	STL	A	STL	5/A-602	6/A-602	--	--	--	--	10	--	129B
		PR 3'-0" x 7'-0"		F	STL	A	STL	5/A-602	6/A-602	--	--	--	--	5	OUT OF PLAY SIGNAGE	129C
		3'-0" x 7'-0"		F	STL	A	STL	5/A-602	6/A-602	--	--	--	--	10A	--	130A
	HH RESTAURANT	PR 3'-0"x 6'-8"		E8	STL	B	STL	3/A-604	4/A-604	5/A-604	--	--	--	3	--	130B
		2'-0" x 6'-8"		F	STL	A	STL	5/A-602	6/A-602	--	--	--	--	15	--	131
	TOILET	2'-0" x 6'-8"	1 3/4"	F	STL	A	STL	5/A-602	6/A-602	--	--	--	--	15	--	132
	NOT USED	--	--	--	--	--	--	--	--	--	--	--	--	--	--	133
	CLARK'S CAFE	3'-0" x 7'-0"	1 3/4"	F	STL	A	STL	5/A-602	6/A-602	--	--	--	--	10A	--	134A
		3'-0" x 7'-0"		F	STL	A	STL	5/A-602	6/A-602	--	--	--	--	10A	--	134B
		PR 3'-0" x 7'-0"		2P	STL	A	STL	3/A-604	4/A-604	5/A-604	--	--	--	5	--	134C
		PR 2'-6" x 7'-0"	1 3/4"	F	STL	C	STL	7/A-602	8/A-602	--	--	--	--	17	DOUBLE ACTING SPRING PIVOTS	135
		3'-0" x 7'-0"		F	STL	A	STL	5/A-602	6/A-602	--	--	--	--	10	OUT OF PLAY SIGNAGE	136A
		PR 3'-0"x 6'-8"	1 3/4"	2P	STL	A	STL	15/A-603	16/A-603	12/A-603	--	--	--	3	--	136B
		--	--	--	--	--	--	--	--	--	--	--	--	--	--	137
	NOT USED	--	--	--	--	--	--	--	--	--	--	--	--	--	--	138
	NOT USED	--	--	--	--	--	--	--	--	--	--	--	--	--	--	139
		3'-0" x 7'-0"	1 3/4"	F	STL	A	STL	5/A-602	6/A-602	--	--	--	--	10	--	140A
		PR 3'-0"x 7'-0"	1 3/4"	1P	STL	A	STL	7/A-603	8/A-603	--	--	--	--	7	--	140B
		3'-0" x 7'-0"	1 3/4"	F	STL	B	STL	3/A-603	4/A-603	--	--	--	--	6	--	141A
		PR 3'-0"x 7'-0"	1 3/4"	F	STL	B	STL	1/A-603	2/A-603	--	--	--	--	16	--	141B
		3'-0" x 7'-0"	1 3/4"	E6	STL	A	STL	15/A-603	16/A-603	11/A-603	--	--	--	2	--	141C
141D	CLOSET	3'-0" x 7'-0"	1 3/4"	F	STL	A	STL	1/A-602	2/A-602	--	--	--	--	10A	OUT OF PLAY SIGNAGE	141D
141E	FLEX SPACE	3'-0" x 7'-0"	1 3/4"	F	STL	A	STL	1/A-602	2/A-602	--	--	--	--	6	--	141E
142	ALLEY	6'-8" x 10'-0"	--	RD	--	--	--	3/A-606	1&2/A-606	--	--	--	--	--	ROLLING DOOR - MOTORIZED	142
143A	LOBBY	3'-0" x 6'-8"	1 3/4"	2P	STL	B	STL	1/A-604	2/A-604	11/A-602	--	--	--	2	--	143A
143B	LOBBY	3'-0" x 7'-0"	1 3/4"	F	STL	A	STL	1/A-602	2/A-602	--	--	--	--	10	--	143B
143C	LOBBY	3'-0" x 7'-0"	1 3/4"	F	STL	B	STL	1/A-603	2/A-603	--	--	--	--	4A	--	143C
144	OFFICE	3'-0" x 7'-0"	1 3/4"	HG	STL	A	STL	1/A-602	2/A-602	--	S-1	--	--	9A	--	144
145	LANDMARK ENR	PR 3'-0" x 7'-0"	1 3/4"	1P	STL	E	STL	3/A-603	4/A-603	--	--	--	--	7	--	145
146	OFFICE	3'-0" x 7'-0"	1 3/4"	HG	STL	A	STL	1/A-602	2/A-602	--	S-1	--	--	9	--	146
147	OFFICE	3'-0" x 7'-0"	1 3/4"	HG	STL	A	STL	1/A-602	2/A-602	--	S-1	--	--	9	--	147
148A	CITY DRUGS	PR 3'-0" x 6'-8"	1 3/4"	1P	STL	B	STL	1/A-604	2/A-604	11/A-602	--	--	--	3	--	148A
148B	CLOSET	3'-0" x 7'-0"	1 3/4"	F	STL	A	STL	1/A-602	2/A-602	--	--	--	--	10	--	148B
149A	RED STRIPE	3'-0" x 7'-0"	1 3/4"	2PAP	STL	E	STL	7/A-603	8/A-603	--	--	--	--	4A	--	149A
149B	RED STRIPE	3'-0" x 7'-0"	1 3/4"	F	STL	A	STL	1/A-602	2/A-602	--	--	--	--	10	--	149B
150A	LIGHT LOCK	10'-0" x 10'-0"	--	RD	--	--	--	12/A-605	11/A-605	--	--	--	--	--	ROLLING DOOR - MOTORIZED	150A
150B	LIGHT LOCK	10'-0" x 10'-0"	--	RD	--	--	--	10/A-605	9/A-605	--	--	--	--	--	ROLLING DOOR - MOTORIZED	150B
150C	LIGHT LOCK	3'-0" x 7'-0"	1 3/4"	F	STL	A	STL	13/A-603	14/A-603	11/A-603	--	--	--	2	--	150C
151A	NY AVE	3'-0" x 7'-0"	1 3/4"	F	STL	A	STL	9/A-603	10/A-603	11/A-603	--	--	--	2	--	151A
151B	NY AVE	3'-0" x 7'-0"	1 3/4"	F	STL	A	STL	9/A-603	10/A-603	11/A-603	--	--	--	2	--	151B
151C	NY AVE	16'-0" X 18'-8"	--	RD	--	--	--	5/A-606	4/A-606	--	--	--	--	--	ROLLING DOOR - MOTORIZED	151C
151D	STAIR 7	3'-0" x 7'-0"	1 3/4"	2P	STL	A	STL	7/A-603	8/A-603	--	--	--	--	4A	--	151D
151E	STAIR 3	3'-0" x 7'-0"	1 3/4"	F	STL	B	STL	3/A-603	4/A-603	--	--	--	--	4A	OUT OF PLAY SIGNAGE	151E
151F	NY AVE	8'-4" X 18'-8"	--	RD	--	--	--	6/A-606	4/A-606	6/A-606	--	--	--	--	ROLLING DOOR - MOTORIZED	151F
151G	NY AVE	8'-4" X 18'-8"	--	RD	--	--	--	6/A-606	4/A-606	6/A-606	--	--	--	--	ROLLING DOOR - MOTORIZED	151G
200	ELECTRICAL RM	3'-0" x 7'-0"	1 3/4"	F	STL	A	STL	1/A-602	2/A-602	--	--	3/4 HR	--	19	--	200
201A	MECHANICAL RM	3'-0" x 7'-0"	1 3/4"	F	STL	A	STL	1/A-602	2/A-602	--	--	3/4 HR	--	19	OUT OF PLAY SIGNAGE	201A
201B	MECHANICAL RM	3'-0" x 7'-0"	1 3/4"	F	STL	A	STL	1/A-602	2/A-602	--	--	3/4 HR	--	19	OUT OF PLAY SIGNAGE	201B
202A	MALL	3'-0" x 7'-0"	1 3/4"	F	STL	A	STL	1/A-602	2/A-602	--	--	--	--	10	OUT OF PLAY SIGNAGE	202A
202B	MALL	3'-0" x 7'-0"	1 3/4"	F	STL	A	STL	1/A-602	2/A-602	--	--	--	--	10	OUT OF PLAY SIGNAGE	202B
203	MATT'S SHOE	3'-0" x 7'-0"	1 3/4"	F	STL	A	STL	1/A-602	2/A-602	--	--	--	--	10	OUT OF PLAY SIGNAGE	203
204A	CITY TRAVEL	3'-0" x 7'-0"	1 3/4"	F	STL	A	STL	1/A-602	2/A-602	--	--	--	--	10	--	204A
B-204B	OFFICE	SEE BREACH DOOR SPECIFICATION		--	--	--	--	5/A-605	6/A-605	--	--	--	--	--	RAM TYPE BREACH DOOR	B-204B
205A	CORRIDOR	3'-0" x 7'-0"	1 3/4"	F	STL	A	STL	1/A-602	2/A-602	--	--	--	--	10	OUT OF PLAY SIGNAGE	205A
205B	STAIR 1	3'-0" x 7'-0"	1 3/4"	F	STL	A	STL	1/A-602	2/A-602	--	--	--	--	4	--	205B
206	PATTY'S KITCHEN	3'-0" x 7'-0"	1 3/4"	F	STL	A	STL	1/A-602	2/A-602	--	--	--	--	10	--	206
207A	TERRY'S MEN	3'-0" x 7'-0"	1 3/4"	F	STL	A	STL	1/A-602	2/A-602	--	--	--	--	10A	--	207A
207B	CHANGING RM	2'-0" x 7'-0"	1 3/4"	F	STL	A	STL	1/A-602	2/A-602	--	--	--	--	10	--	207B
207C	CHANGING RM	2'-0" x 7'-0"	1 3/4"	F	STL	A	STL	1/A-602	2/A-602	--	--	--	--	10	--	207C
208	CLOSET	PR 2'-4" x 7'-0"	1 3/4"	F	STL	A	STL	1/A-602	2/A-602	--	--	--	--	21	OUT OF PLAY SIGNAGE	208
209	MOTEL RM	3'-0" x 6'-8"	1 3/4"	F	STL	A	STL	5/A-603	6/A-603	--	--	--	--	14A	--	209
B-209A	BATH	SEE BREACH DOOR SPECIFICATION		--	--	--	--	5/A-605	6/A-605	--	--	--	--	--	RAM TYPE BREACH DOOR	B-209A
209B	CLOSET	PR 2'-0" x 6'-8"	1 3/8"	F	STL	G	STL	9/A-602	10/A-602	--	--	--	--	20	HUNG SLIDING DOORS	209B
210	MOTEL RM	3'-0" x 6'-8"	1 3/4"	F	STL	A	STL	5/A-603	6/A-603	--	--	--	--	14A	--	210
210A	BATH	2'-8" x 6'-8"	1 3/4"	E6W	STL	A	STL	1/A-602	2/A-602	--	--	--	--	15	--	210A
210B	CLOSET	PR 2'-0" x 6'-8"	1 3/8"	F	STL	G	STL	9/A-602	10/A-602	--	--	--	--	20	HUNG SLIDING DOORS	210B
211	NOT USED	--	--	--	--	--	--	--	--	--	--	--	--	--	--	211
212A	FLEX SPACE	3'-0" x 7'-0"	1 3/4"	F	STL	A	STL	5/A-602	6/A-602	--	--	--	--	10	OUT OF PLAY SIGNAGE	212A
212B	FLEX SPACE	3'-0" x 7'-0"	1 3/4"	F	STL	B	STL	3/A-603	4/A-603	--	--	--	--	6	--	212B
212C	CATWALK	3'-0" x 7'-0"	1 3/4"	F	STL	A	STL	5/A-602	6/A-602	--	--	--	--	10	--	212C
212D	CATWALK	3'-0" x 7'-0"	1 3/4"	F	STL	A	STL	5/A-602	6/A-602	--	--	--	--	10	--	212D
213	OFFICE	3'-0" x 7'-0"	1 3/4"	HG	STL	A	STL	1/A-602	2/A-602	--	S-1	--	--	9	--	213
214	OFFICE	3'-0" x 7'-0"	1 3/4"	HG	STL	A	STL	1/A-602	2/A-602	--	S-1	--	--	9	--	214
215A	BEDROOM	3'-0" x 6'-8"	1 3/4"	E6W	STL	A	STL	1/A-602	2/A-602	--	--	--	--	10	--	215A
215B	CLOSET	PR 2'-0" x 6'-8"	1 3/8"	F	STL	G	STL	9/A-602	10/A-602	--	--	--	--	20	HUNG SLIDING DOORS	215B
216A	APARTMENT	3'-0" x 6'-8"	1 3/4"	E6W	STL	A	STL	1/A-602	2/A-602	--	--	--	--	18	--	216A
216B	BATH	3'-0" x 6'-8"	1 3/4"	E6W	STL	A	STL	1/A-602	2/A-602	--	--	--	--	15	--	216B
216C	APARTMENT	3'-0" x 7'-0"	1 3/4"	F	STL	B	STL	3/A-603	4/A-603	--	--	--	--	18	--	216C
217	LANDMARK ENR	3'-0" x 7'-0"	1 3/4"	F	STL	A	STL	1/A-602	2/A-602	--	--	--	--	10	--	217
B-218A	APARTMENT	SEE BREACH DOOR SPECIFICATION		--	--	--	--	5/A-605	6/A-605	--	--	--	--	--	ARY TYPE BREACH DOOR	B-218A
218B	CLOSET	PR 3'-0" x 6'-8"	1 3/4"	F	STL	A	STL	1/A-602	2/A-602	--	--	--	--	21	OUT OF PLAY SIGNAGE	218B
218C	BATH	3'-0" x 6'-8"	1 3/4"	E6W	STL	A	STL	1/A-602	2/A-602	--	--	--	--	15	--	218C

DOOR SCHEDULE REMARKS

1. WHERE NOTED PROVIDE INSULATED INFILL PANELS AT TRANSOMS.
2. PAINT EXPOSED METAL FRAMES WITH IAL-3 PAINT SYSTEM AT INTERIOR DOORS AND EAL-2 PAINT SYSTEM AT EXTERIOR DOORS. COLORS SELECTED BY DIRECTOR'S REPRESENTATIVE.
3. UNLESS OTHERWISE NOTED, PAINT INTERIOR STEEL DOORS WITH IAL-3 PAINT SYSTEM AND EXTERIOR DOORS WITH EAL-2 PAINT SYSTEM. COLORS SELECTED BY DIRECTOR'S REPRESENTATIVE.
4. DOOR SCHEDULED AS OUT OF PLAY ARE TO BE PROVIDED WITH A SIGN AS SHOWN ON THIS DRAWING MOUNTED CENTERED ON THE DOOR 5'-0" AFF.
5. REFER TO STRUCTURAL DWGS. FOR MASONRY LINTEL SCHEDULE. REFER TO DTL. 3/A-501 FOR STUD LINTEL SCHEDULE.

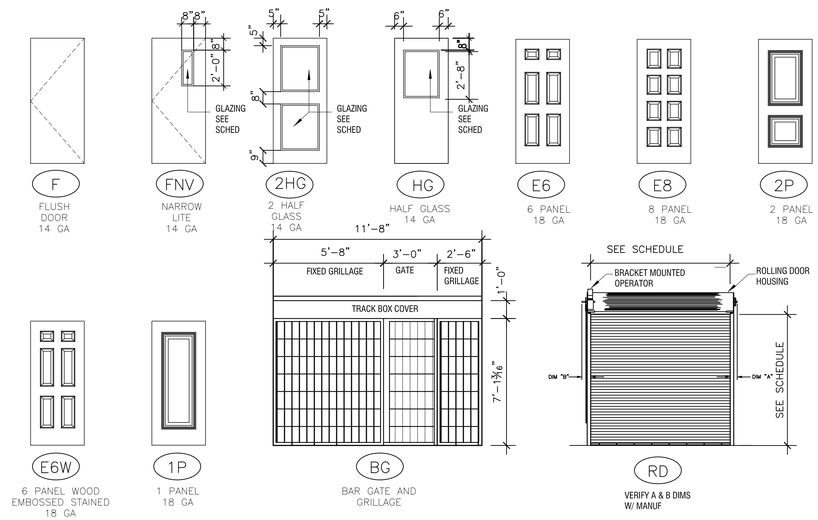

DOOR TYPES

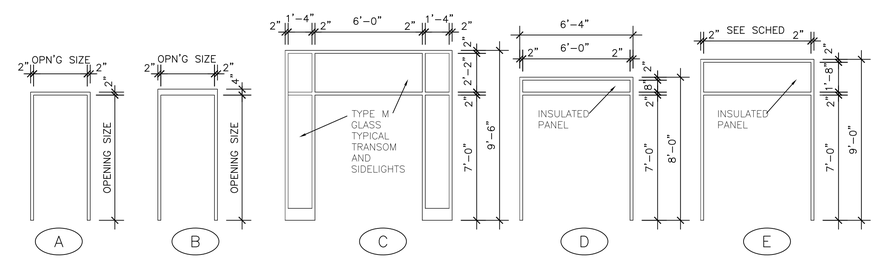

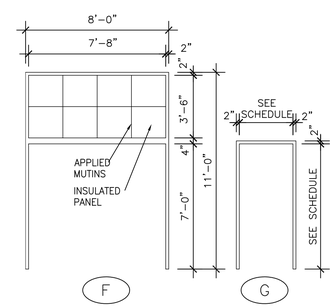

FRAME TYPES

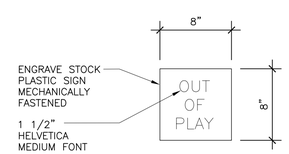

SIGN TYPE

NYS OFFICE OF GENERAL SERVICES
Serving New York

ANDREW M. CUOMO
Governor
ROANN M. DESTITO
COMMISSIONER
JAMES M. DAVIES, A.I.A.
Deputy Commissioner, Design and Construction

WARNING:
THE ALTERATION OF THIS MATERIAL IN ANY WAY, UNLESS DONE UNDER THE DIRECTION OF A COMPARABLE PROFESSIONAL, I.E. ARCHITECT FOR AN ARCHITECT, ENGINEER FOR AN ENGINEER OR LANDSCAPE ARCHITECT FOR A LANDSCAPE ARCHITECT, IS A VIOLATION OF THE NEW YORK STATE EDUCATION LAW AND/OR REGULATIONS AND IS A CLASS 'A' MISDEMEANOR.

REGISTERED ARCHITECT JOHN ROBERT HUTT 025136 STATE OF NEW YORK

CONTRACT:
CONSTRUCTION

TITLE:
PROVIDE CITYSCAPE COMPLEX
BUILDING NO. XXX

LOCATION:
STATE PREPAREDNESS TRAINING CENTER
5900 AIRPORT ROAD
ORISKANY, NY 13424

CLIENT:
DIVISION OF HOMELAND SECURITY & EMERGENCY SERVICES

REVISED DRAWING
09/05/2012

MARK	DATE	DESCRIPTION
2	09/05/2012	ADDENDUM NO 6
1	08/15/2012	ADDENDUM NO 2
	07/05/2012	FINAL SUBMISSION

PROJECT NUMBER:	44014– C
DESIGNED BY:	XXXXX
DRAWN BY:	XXXXX
FIELD CHECK:	XXXXX
APPROVED:	XXXXX

SHEET TITLE:
SCHEDULES

DRAWING NUMBER:
A–601

SHEET X OF X

Sep 07,2012 – 11:22am
V:\Designs\dcomsh\044014\Cad\Arch\A-601.dwg
36x24 PLOT SHEET

NOTES:
1. ALL WINDOWS WITH EXCEPTION OF WINDOWS W01, W02, W03, W04, W05, AND W06, ARE TO BE PROVIDED WITH ROLLING SHUTTERS.

2. ALUMINUM FRAMES ARE TO BE FINISHED WITH CLEAR ANODIZED FINISH. STEEL FRAMES ARE BE PRE-FINISHED, COLORS SELECTED BY DIRECTOR'S REPRESENTATIVE.

3. WINDOWS NOTED AS 180° SWING CASEMENT ARE TO BE PROVIDED WITH HINGES TO ALLOW THE SASH TO SWING CLEAR OF THE WINDOW OPENING. PROVIDE LATCH TO HOLD WINDOW IN THE FULLY POSITION.

4. WINDOWS NOTED WITH REMOVABLE SASH ARE TO BE PROVIDED WITH HARDWARE TO HOLD THE SASH SECURELY IN THE FRAME AND ALLOW FOR REMOVAL.

5. REFER TO STRUCTURAL DWGS. LINTEL SCHEDULE. REFER TO DTL. STUD LINTEL SCHEDULE.

1

1

WINDOW SCHEDULE

MARK	ROOM	WINDOW TYPE	OPENING WD	OPENING HGT	FRAME MATL	GLASS TYPE	DETAIL HEAD	DETAIL JAMB	DETAIL SILL	SHUTTER	NOTES	MARK
W01	–	A	8'–4"	17'–8"	ALUM	M	6/A–606	4/A–606	6/A–606	N.A.	CURTAIN WALL W/ROLLING DOOR	W01
W02	–	A	8'–4"	17'–8"	ALUM	M	6/A–606	4/A–606	6/A–606	N.A.	CURTAIN WALL W/ROLLING DOOR	W02
W03	100	B	4'–0"	9'–2"	ALUM	M/IP	1/A–608	2/A–608	1/A–608	N.A.		W03
W04	100	B	4'–0"	9'–2"	ALUM	M/IP	1/A–608	2/A–608	1/A–608	N.A.		W04
W05	102	B	4'–0"	9'–2"	ALUM	M/IP	1/A–608	2/A–608	1/A–608	N.A.		W05
W06	103	B	4'–0"	9'–2"	ALUM	M/IP	1/A–608	2/A–608	1/A–608	N.A.		W06
W07	–	–	–	–							NOT USED	W07
W08	112	C	5'–0"	4'–0"	ALUM	S–1	3/A–608	4/A–608	3/A–608	GEAR		W08
W09	114	C	5'–0"	4'–0"	ALUM	S–1	3/A–608	4/A–608	3/A–608	GEAR		W09
W10	120	D.1	5'–0"	4'–6"	STL	S–1	5/A–608	6/A–608	5/A–608	GEAR	REMOVABLE SASH	W10
W11	119	D.1	5'–0"	4'–6"	STL	S–1	5/A–608	6/A–608	5/A–608	GEAR	REMOVABLE SASH	W11
W12	118	D	5'–0"	3'–0"	STL	S–1	5/A–608	6/A–608	5/A–608	GEAR		W12
W13	116	B	4'–0"	9'–2"	ALUM	S–1/IP	1/A–609	2/A–609	1/A–609	GEAR W/ASSIST		W13
W14	113	B	4'–0"	9'–2"	ALUM	S–1/IP	1/A–609	2/A–609	1/A–609	GEAR W/ASSIST		W14
W15	111	B	4'–0"	9'–2"	ALUM	S–1/IP	1/A–609	2/A–609	1/A–609	GEAR W/ASSIST		W15
W16	109	B	4'–0"	9'–2"	ALUM	S–1/IP	1/A–609	2/A–609	1/A–609	GEAR W/ASSIST		W16
W17	–	–	–	–							NOT USED	W17
W18	148	E	10'–8"	5'–8"	ALUM	S–1	3/A–609	4/A–609	3/A–609	MOTOR		W18
W19	149	F	9'–2"	10'–0"	ALUM	S–1	5/A–610	6/A–610	5/A–610	MOTOR		W19
W20	149	G	3'–0"	9'–0"	STL	S–1	7/A–610	8/A–610	7/A–610	GEAR W/ASSIST		W20
W21	149	G.1	3'–0"	9'–0"	STL	S–1	7/A–610	8/A–610	7/A–610	GEAR W/ASSIST	REMOVABLE SASH	W21
W22	145	H	4'–8"	6'–0"	ALUM	S–1	1/A–610	2/A–609	1/A–610	GEAR W/ASSIST		W22
W23	145	H	4'–8"	6'–0"	ALUM	S–1	1/A–610	2/A–609	1/A–610	GEAR W/ASSIST		W23
W24	141	I	4'–0"	6'–0"	ALUM	S–1	5/A–609	2/A–609	5/A–609	GEAR W/ASSIST		W24
W25	141	I	4'–0"	6'–0"	ALUM	S–1	5/A–609	2/A–609	5/A–609	GEAR W/ASSIST		W25
W26	140	J	6'–10"	7'–8"	ALUM	S–1	3/A–610	2/A–610 4/A–610	3/A–610	MOTOR		W26
W27	134	K	6'–0"	5'–4"	ALUM	––	7/A–609	8/A–609	7/A–609	GEAR W/ASSIST	NO GLASS	W27
W28	134	K	6'–0"	5'–4"	ALUM	––	7/A–609	8/A–609	7/A–609	GEAR W/ASSIST	NO GLASS	W28
W29	122	L	6'–8"	8'–0"	ALUM	S–1	1/A–611	2/A–611	1/A–611	MOTOR		W29
W30	–	–	–	–							NOT USED	W30
W31	123	L	6'–8"	8'–0"	ALUM	S–1	3/A–611	4/A–611	3/A–611	MOTOR		W31
W32	130	N	5'–8"	5'–0"	ALUM	S–1	2/A–613	3/A–613	2/A–613	GEAR W/ASSIST		W32
W33	130	N	5'–8"	5'–0"	ALUM	S–1	2/A–613	3/A–613	2/A–613	GEAR W/ASSIST		W33
W34	130	N	5'–8"	5'–0"	ALUM	S–1	5/A–611	6/A–611	5/A–611	GEAR W/ASSIST		W34
W35	130	N	5'–8"	5'–0"	ALUM	S–1	5/A–611	6/A–611	5/A–611	GEAR W/ASSIST		W35
W36	136	O	2'–8"	4'–10"	ALUM	S–1	7/A–608	8/A–608	7/A–608	GEAR		W36
W37	136	O	2'–8"	4'–10"	ALUM	S–1	7/A–608	8/A–608	7/A–608	GEAR		W37
W38	141	P	3'–10"	4'–0"	ALUM	S–1	7/A–608	8/A–608	7/A–608	GEAR		W38
W39	141	P	3'–10"	4'–0"	ALUM	S–1	7/A–608	8/A–608	7/A–608	GEAR		W39
W40	143	Q	6'–4"	5'–4"	ALUM	S–1	1/A–612	2/A–612	1/A–612	GEAR W/ASSIST		W40
W41	143	Q	6'–4"	5'–4"	ALUM	S–1	1/A–612	2/A–612	1/A–612	GEAR W/ASSIST		W41
W42	148	E	10'–8"	5'–8	ALUM	S–1	3/A–609	4/A–609	3/A–609	MOTOR		W42
W43	210	D.1	5'–0"	4'–6"	STL	S–1	5/A–608	6/A–608	5/A–608	GEAR	REMOVABLE SASH	W43
W43A	210	S.1	3'–0"	4'–8"	STL	S–1	3/A–608	4/A–608	3/A–608	GEAR	180° SWING CASEMENT–NO MUNTINS	W43A
W44	209	D.1	5'–0"	4'–6"	STL	S–1	5/A–608	6/A–608	5/A–608	GEAR	REMOVABLE SASH	W44
W45	218	R	6'–0"	6'–0"	STL	S–1	5/A–612	6/A–612	5/A–612	GEAR W/ASSIST	180° SWING CASEMENT	W45
W46	218	R	6'–0"	6'–0"	STL	S–1	5/A–612	6/A–612	5/A–612	GEAR W/ASSIST	180° SWING CASEMENT	W46
W47	STAIR 7	R.1	4'–0"	6'–0"	STL	S–1	1/A–613	2/A–609	1/A–613	GEAR W/ASSIST		W47
W48	216	R	6'–0"	6'–0"	STL	S–1	1/A–613	2/A–609	1/A–613	GEAR W/ASSIST	180° SWING CASEMENT	W48
W49	216	R	6'–0"	6'–0"	STL	S–1	1/A–613	2/A–609	1/A–613	GEAR W/ASSIST	180° SWING CASEMENT	W49
W50	212	S	3'–0"	4'–8"	STL	S–1	3/A–610	4/A–610	3/A–610	GEAR		W50
W51	212	S	3'–0"	4'–8"	STL	S–1	3/A–610	4/A–610	3/A–610	GEAR		W51
W52	212	S.1	3'–0"	4'–8"	STL	S–1	3/A–610	4/A–610	3/A–610	GEAR	180° SWING CASEMENT	W52
W53	212	T	2'–0"	5'–4"	STL	S–1	4/A–613	5/A–613	4/A–613	GEAR	CASEMENT	W53
W54	212	T	2'–0"	5'–4"	STL	S–1	4/A–613	5/A–613	4/A–613	GEAR	CASEMENT	W54
W55	212	T	2'–0"	5'–4"	STL	S–1	4/A–613	5/A–613	4/A–613	GEAR	CASEMENT	W55
W56	213	S.1	3'–0"	4'–8"	STL	S–1	1/A–612	2/A–612	1/A–612	GEAR	180° SWING CASEMENT	W56
W57	217	S.1	3'–0"	4'–8"	STL	S–1	1/A–612	2/A–612	1/A–612	GEAR	180° SWING CASEMENT	W57
W58	217	S.1	3'–0"	4'–8"	STL	S–1	1/A–612	2/A–612	1/A–612	GEAR	180° SWING CASEMENT	W58
W59	213	U.1	3'–0"	6'–0"	STL	S–1	5/A–609	2/A–609	5/A–609	GEAR	180° SWING CASEMENT	W59
W60	214	U	3'–0"	6'–0"	STL	S–1	5/A–609	2/A–609	5/A–609	GEAR		W60
W61	215	U	3'–0"	6'–0"	STL	S–1	5/A–609	2/A–609	5/A–609	GEAR		W61
W62	216	V	3'–0"	6'–0"	STL	S–1	5/A–609	2/A–609	5/A–609	GEAR	DOUBLE HUNG	W62
W63	212	U	3'–0"	6'–0"	STL	S–1	5/A–609	2/A–609	5/A–609	GEAR		W63
W64	212	U	3'–0"	6'–0"	STL	S–1	5/A–609	2/A–609	5/A–609	GEAR		W64
W65	212	U	3'–0"	6'–0"	STL	S–1	5/A–609	2/A–609	5/A–609	GEAR		W65

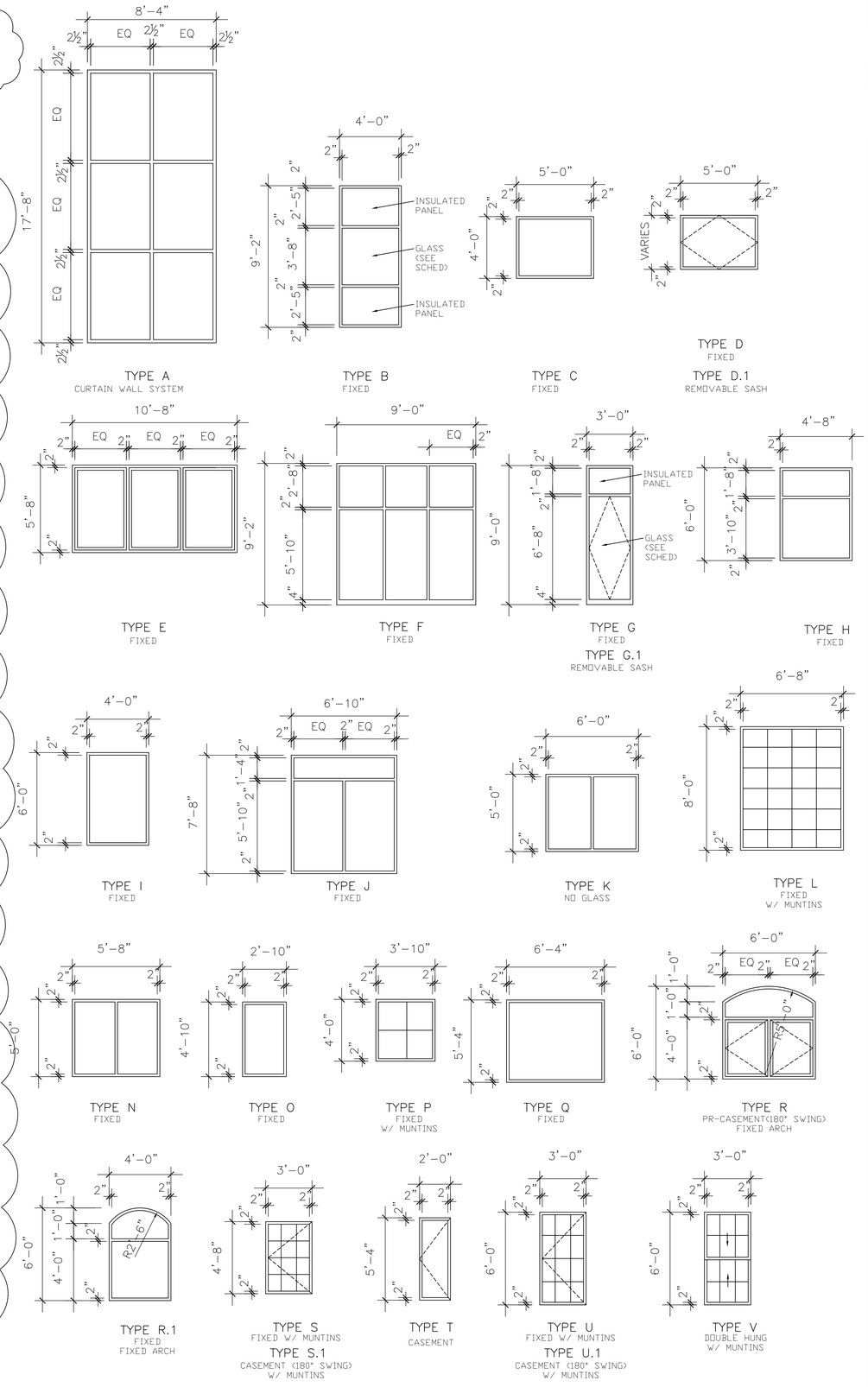

NYS OFFICE OF GENERAL SERVICES
Serving New York

ANDREW M. CUOMO
Governor
ROANN M. DESTITO
COMMISSIONER
JAMES M. DAVIES, A.I.A.
Deputy Commissioner, Design and Construction

WARNING:
THE ALTERATION OF THIS MATERIAL IN ANY WAY, UNLESS DONE UNDER THE DIRECTION OF A COMPARABLE PROFESSIONAL, I.E. ARCHITECT FOR AN ARCHITECT, ENGINEER FOR AN ENGINEER OR LANDSCAPE ARCHITECT FOR A LANDSCAPE ARCHITECT, IS A VIOLATION OF THE NEW YORK STATE EDUCATION LAW AND/OR REGULATIONS AND IS A CLASS 'A' MISDEMEANOR.

REGISTERED ARCHITECT
JOHN ROBERT HUTTER
023156
STATE OF NEW YORK

CONTRACT:
CONSTRUCTION

TITLE:
PROVIDE CITYSCAPE COMPLEX

BUILDING NO. XXX

LOCATION:
STATE PREPAREDNESS TRAINING CENTER
5900 AIRPORT ROAD
ORISKANY, NY 13424

CLIENT:
DIVISION OF HOMELAND SECURITY & EMERGENCY SERVICES

REVISED DRAWING
09/5/2012

MARK	DATE	DESCRIPTION
1	09/5/2012	ADDENDUM NO 6
	07/05/2012	FINAL SUBMISSION

PROJECT NUMBER:	44014– C
DESIGNED BY:	XXXXX
DRAWN BY:	XXXXX
FIELD CHECK:	XXXXX
APPROVED:	XXXXX

SHEET TITLE:
WINDOW SCHEDULE

DRAWING NUMBER:
A–607

SHEET X OF X

Sep 07,2012 – 11:07am
V:\Designs\Dorsey\1\44xxx\44014\Cadarch\A-607.dwg
36x24 PLOT SHEET

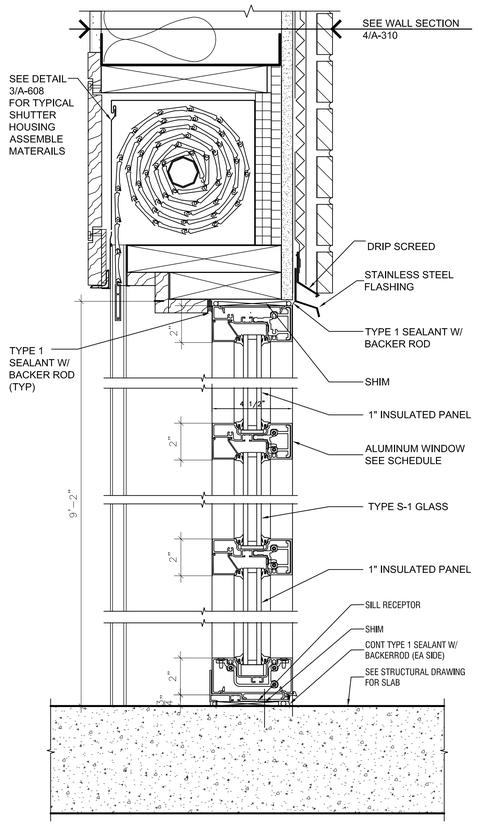

1 A-609 **WINDOW HEAD/SILL DETAIL**
3" = 1'-0"

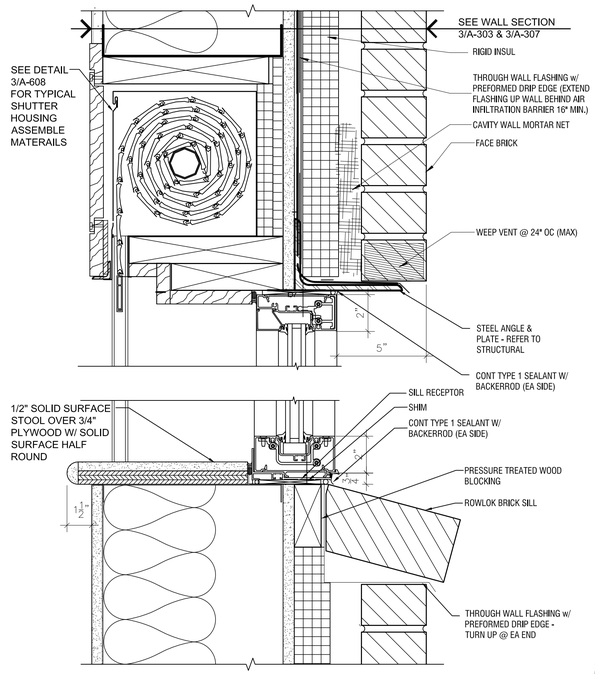

3 A-609 **WINDOW HEAD/SILL DETAIL**
3" = 1'-0"

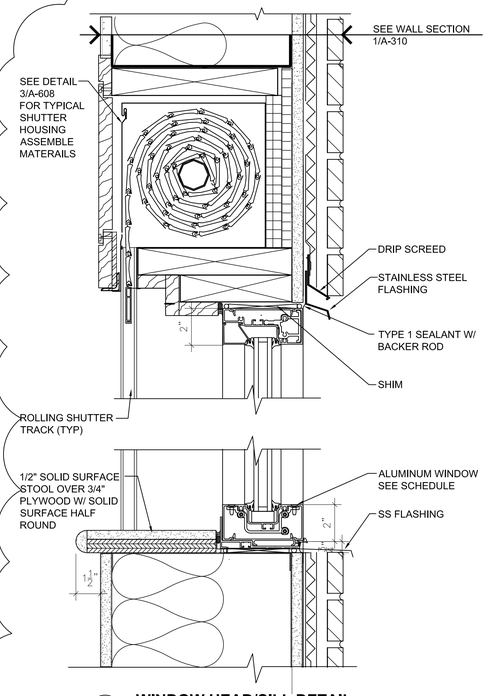

5 A-609 **WINDOW HEAD/SILL DETAIL**
3" = 1'-0"

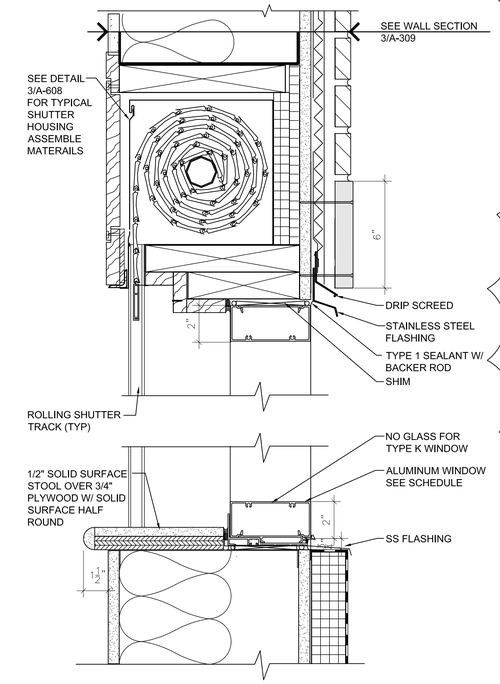

7 A-609 **WINDOW HEAD/SILL DETAIL**
3" = 1'-0"

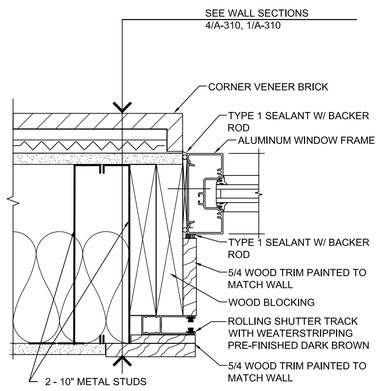

2 A-609 **WINDOW JAMB DETAIL**
3" = 1'-0"

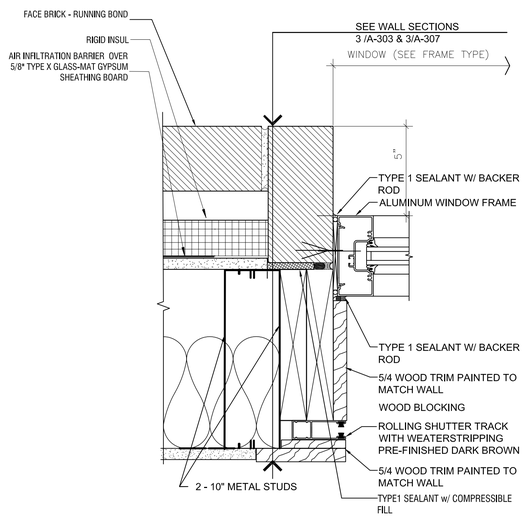

4 A-609 **WINDOW JAMB DETAIL**
3" = 1'-0"

6 A-609 **NOT USED**
3" = 1'-0"

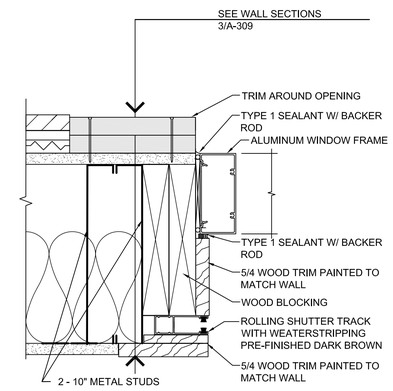

8 A-609 **WINDOW JAMB DETAIL**
3" = 1'-0"

Sep 07,2012 - 11:12am
V:\Designs\Consult\P44044\44014\Cad\Arch\A-609.dwg
36x24 PLOT SHEET

NYS OFFICE OF GENERAL SERVICES
Serving New York

ANDREW M. CUOMO
Governor
ROANN M. DESTITO
COMMISSIONER
JAMES M. DAVIES, A.I.A.
Deputy Commissioner, Design and Construction

WARNING:
THE ALTERATION OF THIS MATERIAL IN ANY WAY, UNLESS DONE UNDER THE DIRECTION OF A COMPARABLE PROFESSIONAL, I.E. ARCHITECT FOR AN ARCHITECT, ENGINEER FOR AN ENGINEER OR LANDSCAPE ARCHITECT FOR A LANDSCAPE ARCHITECT, IS A VIOLATION OF THE NEW YORK STATE EDUCATION LAW AND/OR REGULATIONS AND IS A CLASS 'A' MISDEMEANOR.

REGISTERED ARCHITECT
JOHN ROBERT HUTTON
025158
STATE OF NEW YORK

CONTRACT:
CONSTRUCTION

TITLE:
PROVIDE CITYSCAPE COMPLEX

BUILDING NO. XXX

LOCATION:
STATE PREPAREDNESS TRAINING CENTER
5900 AIRPORT ROAD
ORISKANY, NY 13424

CLIENT:
DIVISION OF HOMELAND SECURITY
& EMERGENCY SERVICES

REVISED DRAWING
09/5/2012

MARK	DATE	DESCRIPTION
1	09/5/2012	ADDENDUM NO 6
	07/05/2012	FINAL SUBMISSION

PROJECT NUMBER:	44014– C
DESIGNED BY:	XXXXX
DRAWN BY:	XXXXX
FIELD CHECK:	XXXXX
APPROVED:	XXXXX

SHEET TITLE:
WINDOW DETAILS

DRAWING NUMBER:
A–609

SHEET X OF X

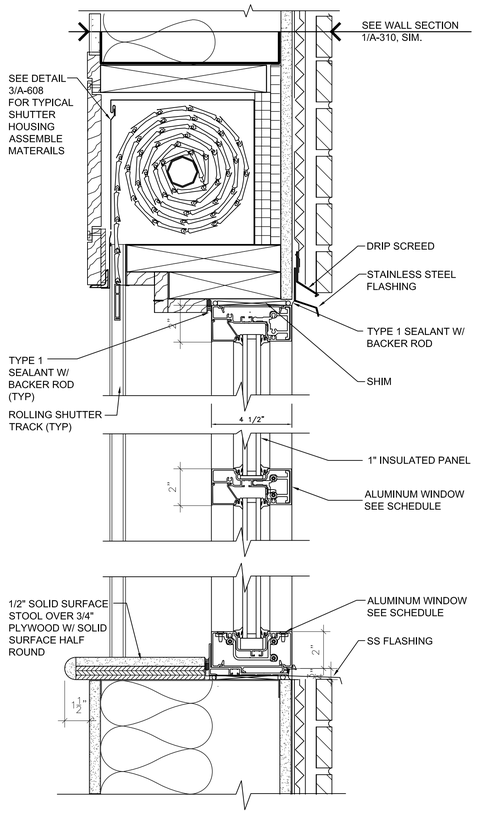

1 A-610 **WINDOW HEAD/SILL DETAIL**
3" = 1'-0"

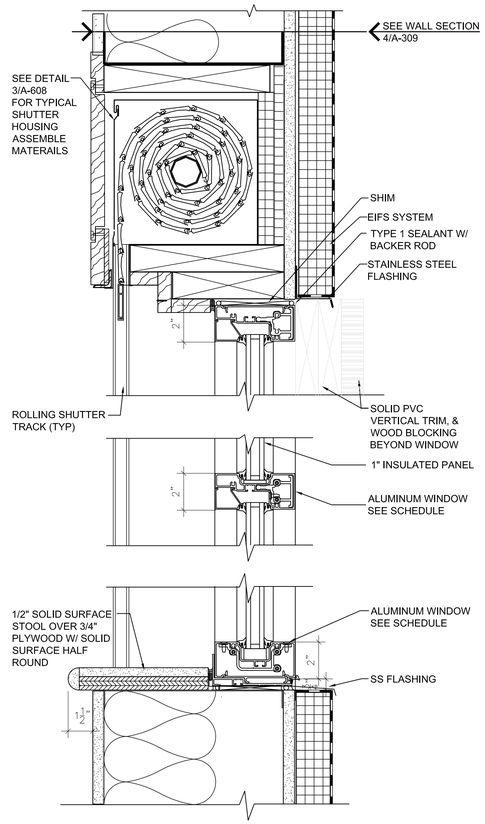

3 A-610 **WINDOW HEAD/SILL DETAIL**
3" = 1'-0"

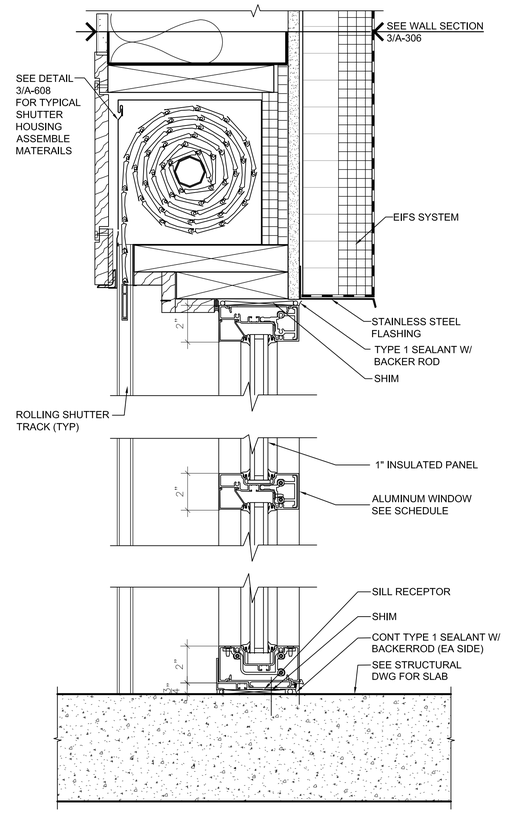

5 A-610 **WINDOW HEAD/SILL DETAIL**
3" = 1'-0"

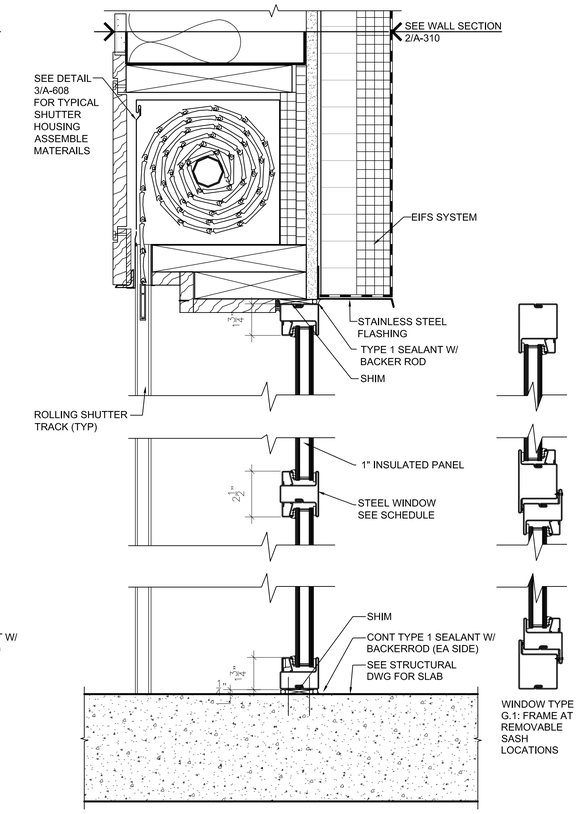

7 A-610 **WINDOW HEAD/SILL DETAIL**
3" = 1'-0"

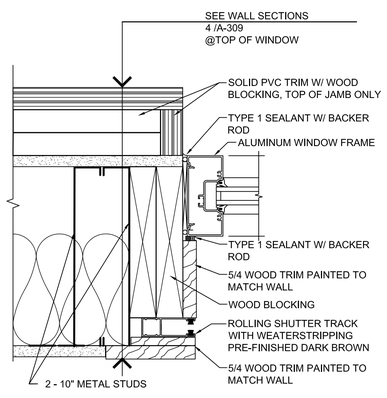

2 A-610 **WINDOW JAMB DETAIL**
3" = 1'-0"

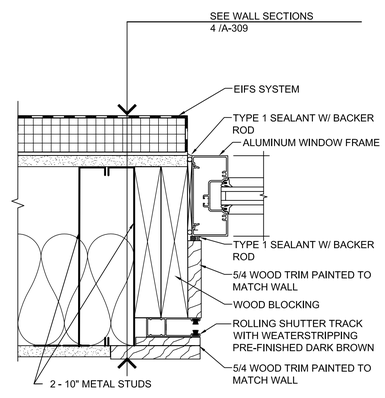

4 A-610 **WINDOW JAMB DETAIL**
3" = 1'-0"

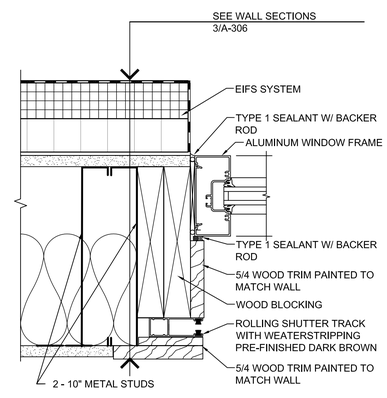

6 A-610 **WINDOW JAMB DETAIL**
3" = 1'-0"

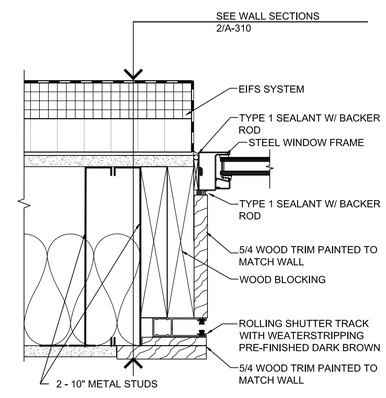

8 A-610 **WINDOW JAMB DETAIL**
3" = 1'-0"

NYS OFFICE OF GENERAL SERVICES

Serving New York

ANDREW M. CUOMO
Governor
ROANN M. DESTITO
COMMISSIONER
JAMES M. DAVIES, A.I.A.
Deputy Commissioner, Design and Construction

WARNING:

THE ALTERATION OF THIS MATERIAL IN ANY WAY, UNLESS DONE UNDER THE DIRECTION OF A COMPARABLE PROFESSIONAL, I.E. ARCHITECT FOR AN ARCHITECT, ENGINEER FOR AN ENGINEER OR LANDSCAPE ARCHITECT FOR A LANDSCAPE ARCHITECT, IS A VIOLATION OF THE NEW YORK STATE EDUCATION LAW AND/OR REGULATIONS AND IS A CLASS 'A' MISDEMEANOR.

REGISTERED ARCHITECT
TODD ROBERT HUTTON
025156
STATE OF NEW YORK

CONTRACT:
CONSTRUCTION

TITLE:
PROVIDE CITYSCAPE COMPLEX

BUILDING NO. XXX

LOCATION:
STATE PREPAREDNESS TRAINING CENTER
5900 AIRPORT ROAD
ORISKANY, NY 13424

CLIENT:
DIVISION OF HOMELAND SECURITY
& EMERGENCY SERVICES

ADDENDUM
DRAWING
09/05/2012

MARK	DATE	DESCRIPTION
	09/05/2012	ADDENDUM NO 6
	07/05/2012	FINAL SUBMISSION

PROJECT NUMBER:	44014– C
DESIGNED BY:	XXXXX
DRAWN BY:	XXXXX
FIELD CHECK:	XXXXX
APPROVED:	XXXXX

SHEET TITLE:

WINDOW DETAILS

DRAWING NUMBER:
A–610

SHEET X OF X

Sep 07,2012 – 11:15am
V:\Designed\Const\V940s\Y4014\CodArch\A-610.dwg
36x24 PLOT SHEET

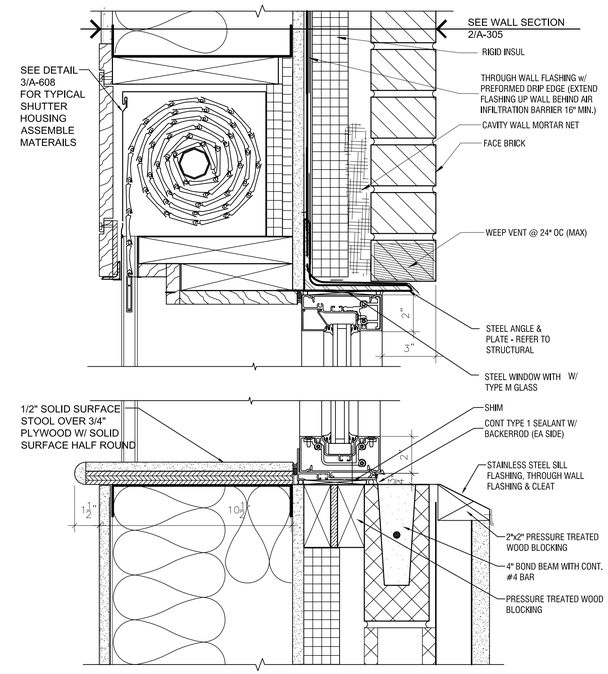

1 A-611 **WINDOW HEAD/SILL DETAIL**
3" = 1'-0"

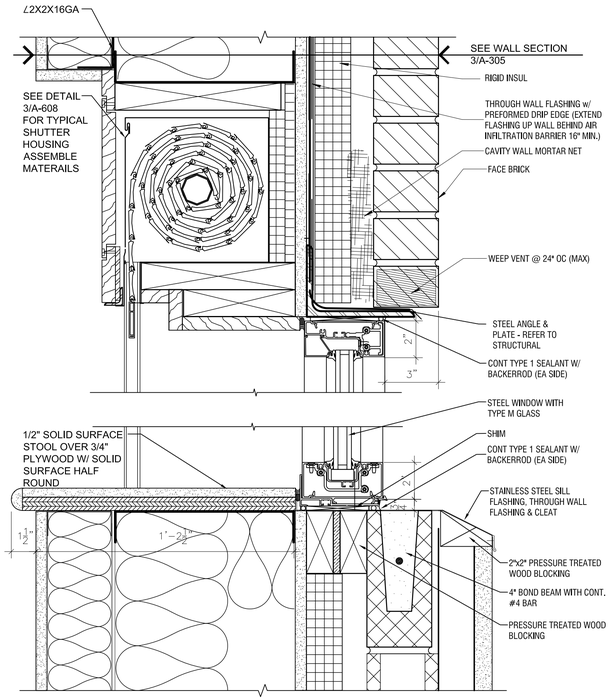

3 A-611 **WINDOW HEAD/SILL DETAIL**
3" = 1'-0"

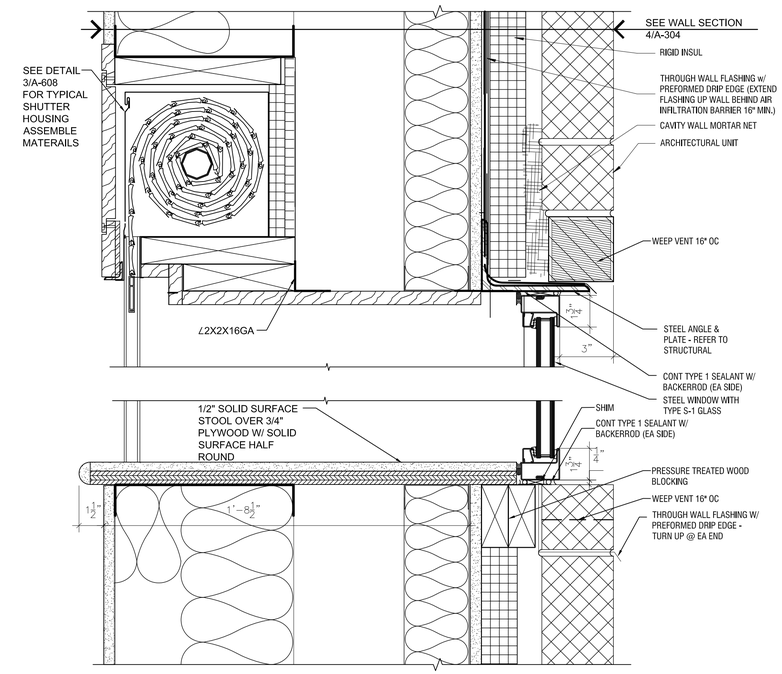

5 A-611 **WINDOW HEAD/SILL DETAIL**
3" = 1'-0"

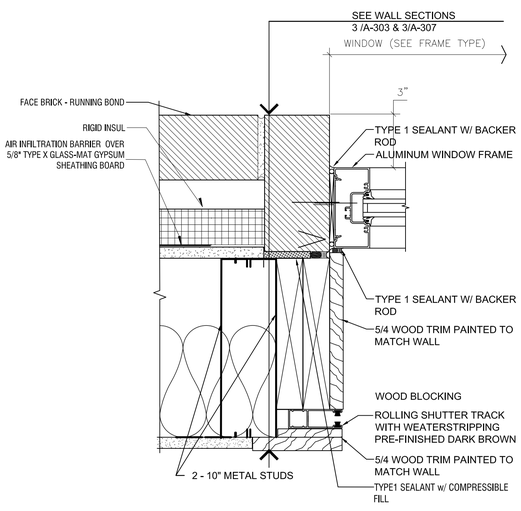

2 A-611 **WINDOW JAMB DETAIL**
3" = 1'-0"

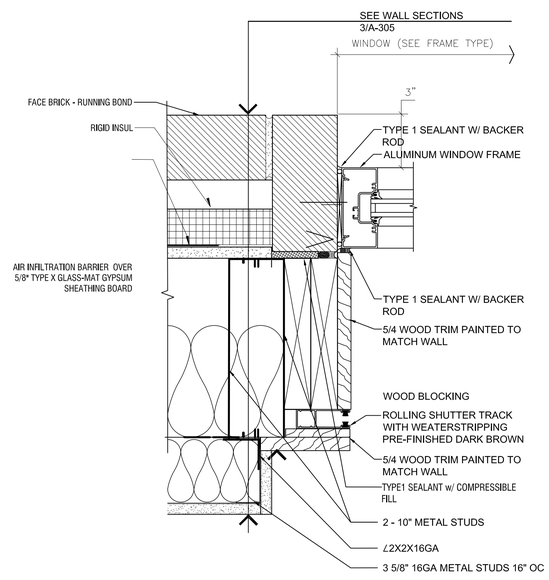

4 A-611 **WINDOW JAMB DETAIL**
3" = 1'-0"

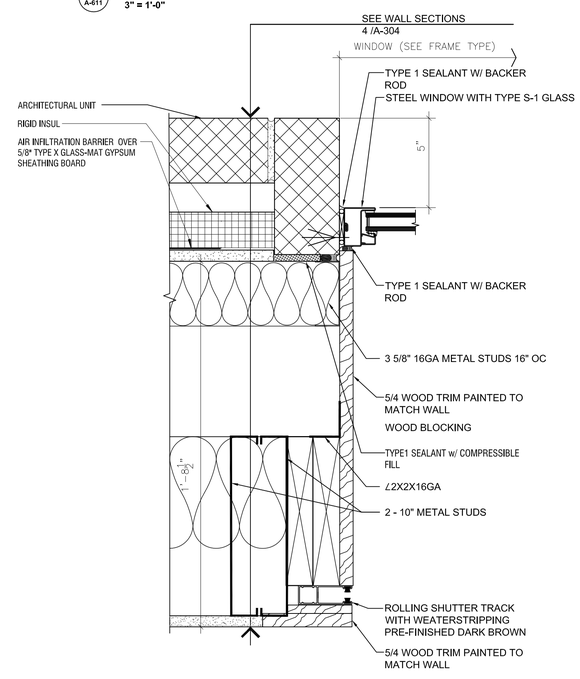

6 A-611 **WINDOW JAMB DETAIL**
3" = 1'-0"

Sep 07,2012 - 11:12am
V:\Designs\Consult\PHOA\44014\Cadarch\A-611.dwg
36x24 PLOT SHEET

NYS OFFICE OF GENERAL SERVICES

Serving New York

ANDREW M. CUOMO
Governor
ROANN M. DESTITO
COMMISSIONER
JAMES M. DAVIES, A.I.A.
Deputy Commissioner, Design and Construction

WARNING:

THE ALTERATION OF THIS MATERIAL IN ANY WAY, UNLESS DONE UNDER THE DIRECTION OF A COMPARABLE PROFESSIONAL, I.E. ARCHITECT FOR AN ARCHITECT, ENGINEER FOR AN ENGINEER OR LANDSCAPE ARCHITECT FOR A LANDSCAPE ARCHITECT, IS A VIOLATION OF THE NEW YORK STATE EDUCATION LAW AND/OR REGULATIONS AND IS A CLASS 'A' MISDEMEANOR.

REGISTERED ARCHITECT
JOHN ROBERT HUTTON
025156
STATE OF NEW YORK

CONTRACT:
CONSTRUCTION

TITLE:
PROVIDE CITYSCAPE COMPLEX

BUILDING NO. XXX

LOCATION:
STATE PREPAREDNESS TRAINING CENTER
5900 AIRPORT ROAD
ORISKANY, NY 13424

CLIENT:
DIVISION OF HOMELAND SECURITY
& EMERGENCY SERVICES

ADDENDUM
DRAWING
09/05/2012

MARK	DATE	DESCRIPTION
	09/05/2012	ADDENDUM NO 6
	07/05/2012	FINAL SUBMISSION

PROJECT NUMBER:	44014– C
DESIGNED BY:	XXXXX
DRAWN BY:	XXXXX
FIELD CHECK:	XXXXX
APPROVED:	XXXXX

SHEET TITLE:

WINDOW DETAILS

DRAWING NUMBER:

A–611

SHEET X OF X

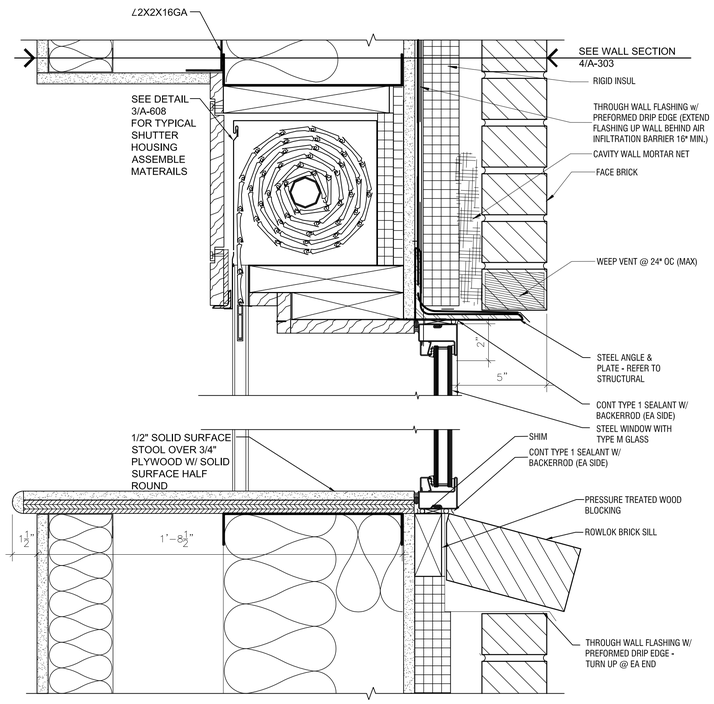

1 A-612 **WINDOW HEAD/SILL DETAIL**
3" = 1'-0"

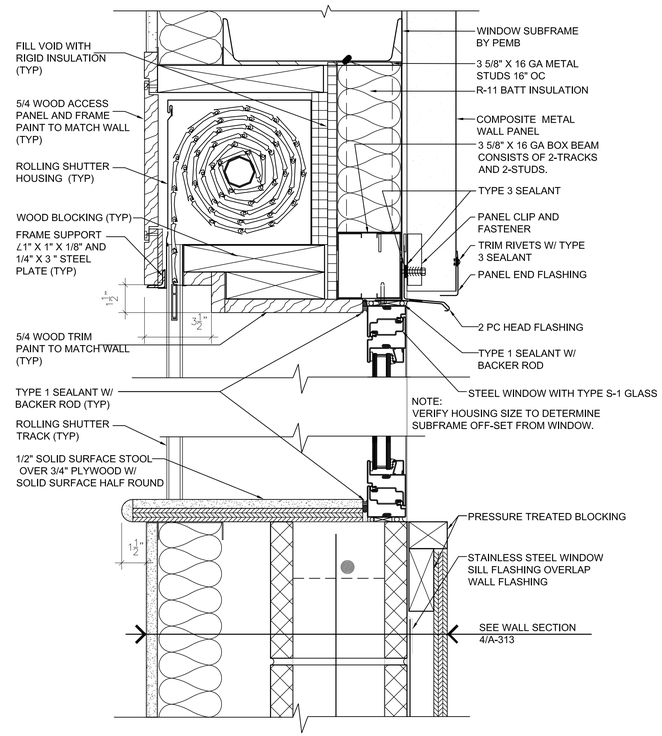

3 A-612 **WINDOW HEAD/SILL DETAIL**
3" = 1'-0"

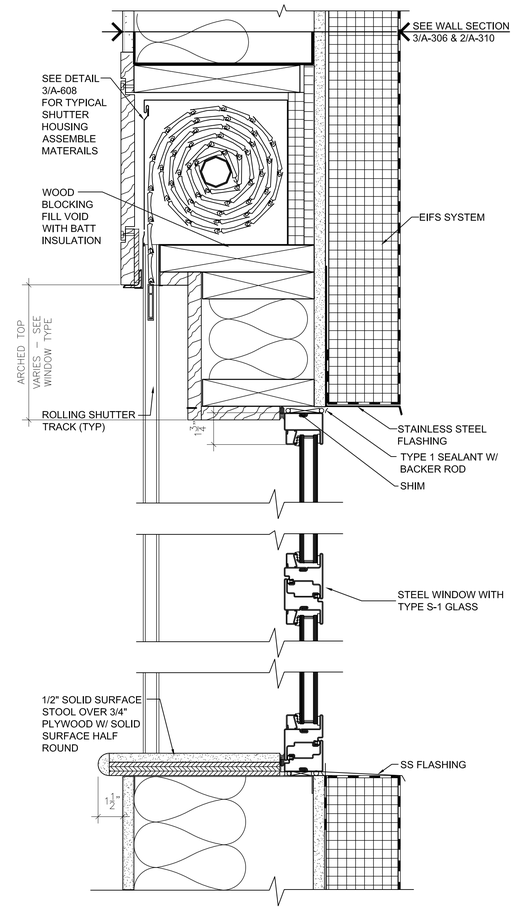

5 A-612 **WINDOW HEAD/SILL DETAIL**
3" = 1'-0"

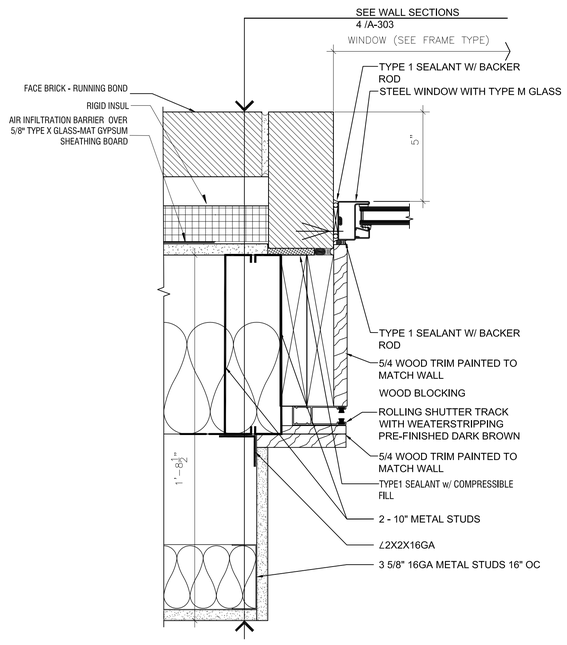

2 A-612 **WINDOW JAMB DETAIL**
3" = 1'-0"

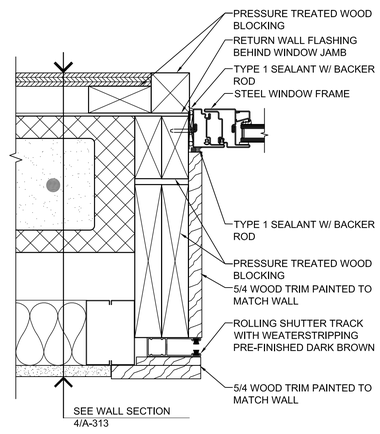

4 A-612 **WINDOW JAMB DETAIL**
3" = 1'-0"

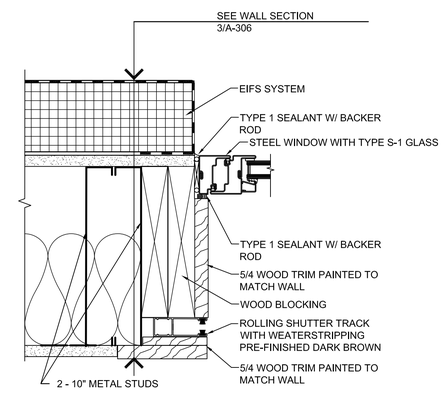

6 A-612 **WINDOW JAMB DETAIL**
3" = 1'-0"

NYS OFFICE OF GENERAL SERVICES
Serving New York

ANDREW M. CUOMO
Governor
ROANN M. DESTITO
COMMISSIONER
JAMES M. DAVIES, A.I.A.
Deputy Commissioner, Design and Construction

WARNING:
THE ALTERATION OF THIS MATERIAL IN ANY WAY, UNLESS DONE UNDER THE DIRECTION OF A COMPARABLE PROFESSIONAL, I.E. ARCHITECT FOR AN ARCHITECT, ENGINEER FOR AN ENGINEER OR LANDSCAPE ARCHITECT FOR A LANDSCAPE ARCHITECT, IS A VIOLATION OF THE NEW YORK STATE EDUCATION LAW AND/OR REGULATIONS AND IS A CLASS 'A' MISDEMEANOR.

REGISTERED ARCHITECT
THOMAS ROBERT HUTTER
025156
STATE OF NEW YORK

CONTRACT:
CONSTRUCTION

TITLE:
PROVIDE CITYSCAPE COMPLEX

BUILDING NO. XXX

LOCATION:
STATE PREPAREDNESS TRAINING CENTER
5900 AIRPORT ROAD
ORISKANY, NY 13424

CLIENT:
DIVISION OF HOMELAND SECURITY
& EMERGENCY SERVICES

ADDENDUM
DRAWING
09/05/2012

MARK	DATE	DESCRIPTION
	09/05/2012	ADDENDUM NO 6
	07/05/2012	FINAL SUBMISSION

PROJECT NUMBER:	44014– C
DESIGNED BY:	XXXXX
DRAWN BY:	XXXXX
FIELD CHECK:	XXXXX
APPROVED:	XXXXX

SHEET TITLE:
WINDOW DETAILS

DRAWING NUMBER:
A–612

SHEET X OF X

Sep 07,2012 – 11:18am
V:\Design\AutoCons\P-44044 \CadKech\A-612.dwg
36x24 PLOT SHEET

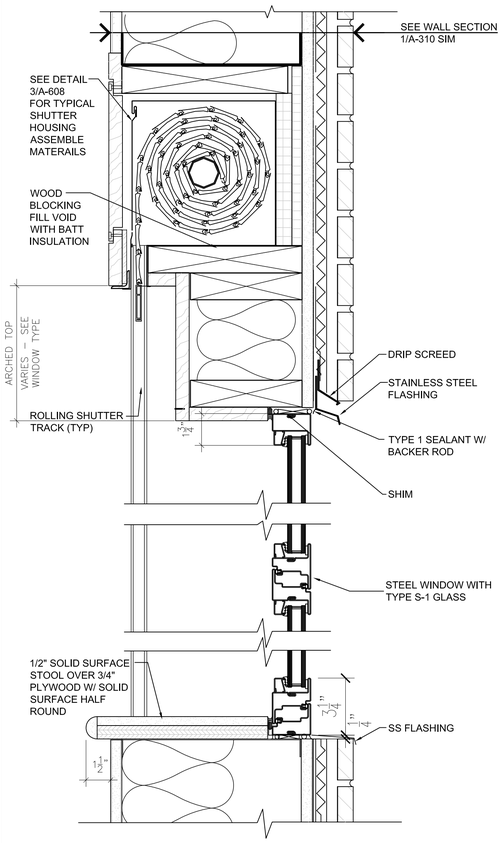

1 A-613 **WINDOW HEAD/SILL DETAIL**
3" = 1'-0"

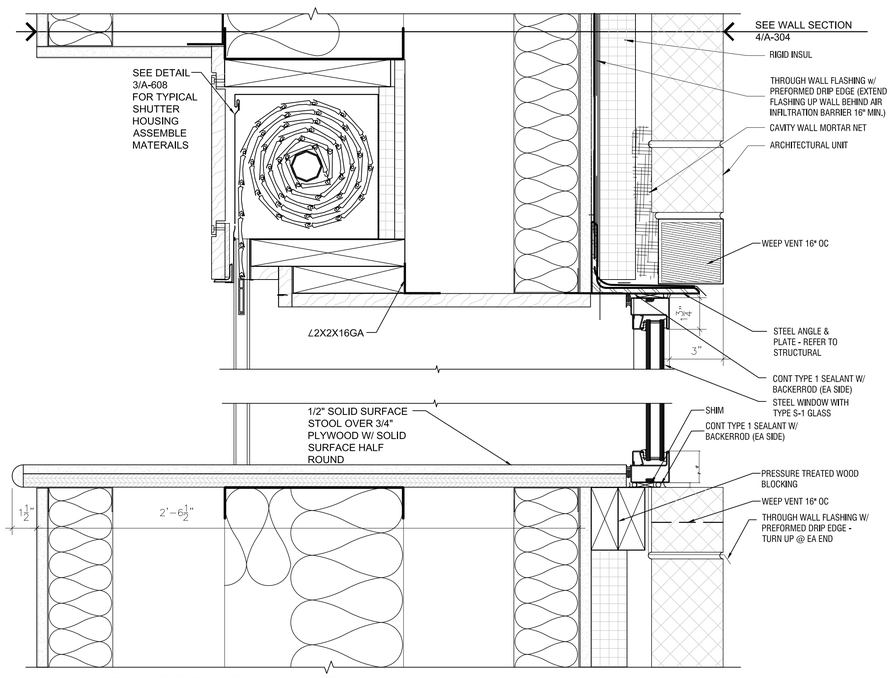

2 A-613 **WINDOW HEAD/SILL DETAIL**
3" = 1'-0"

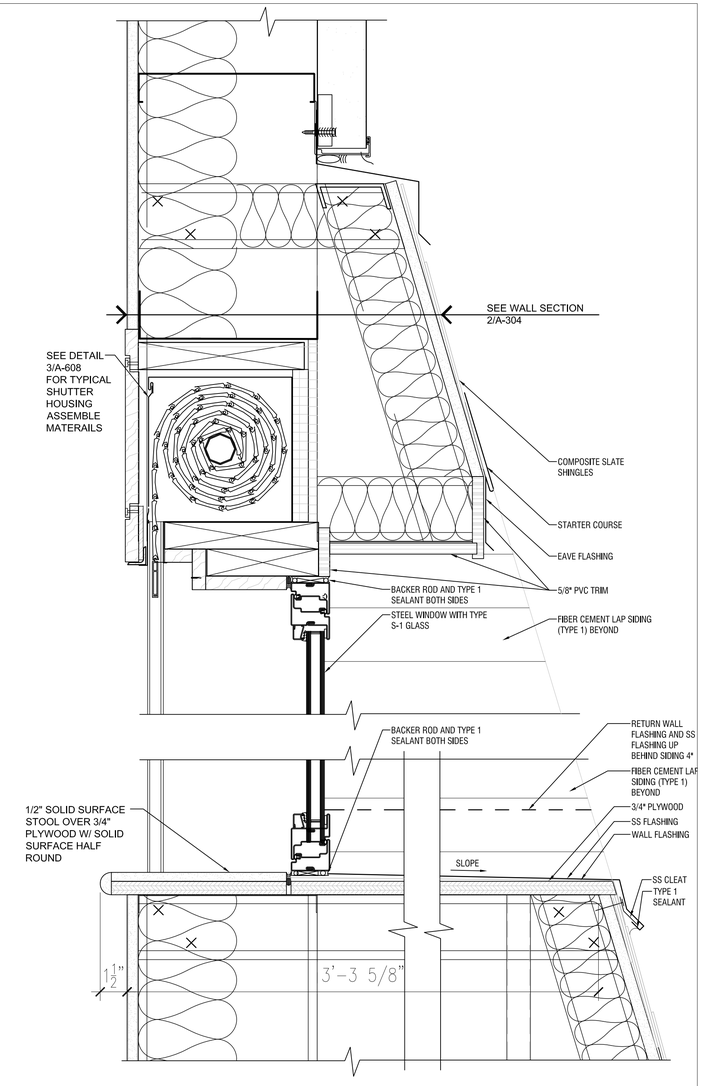

4 A-613 **WINDOW HEAD/SILL DETAIL**
3" = 1'-0"

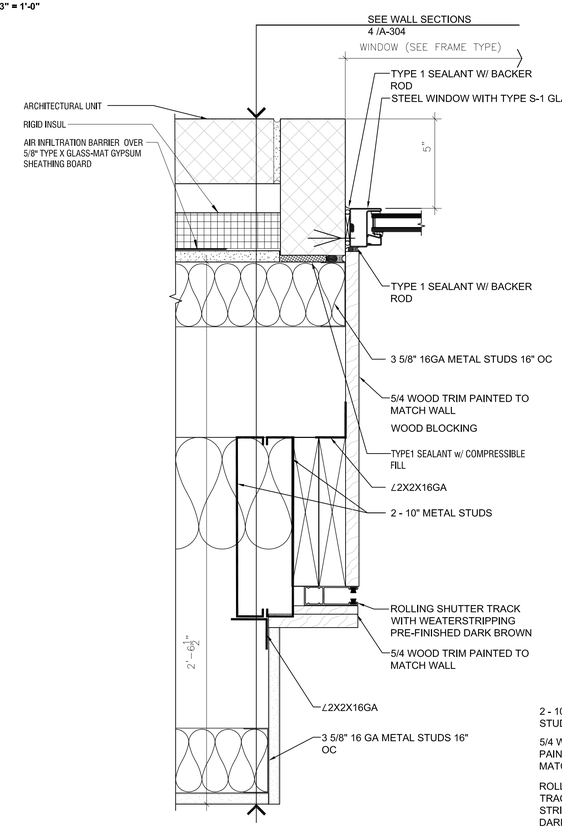

3 A-613 **WINDOW JAMB DETAIL**
3" = 1'-0"

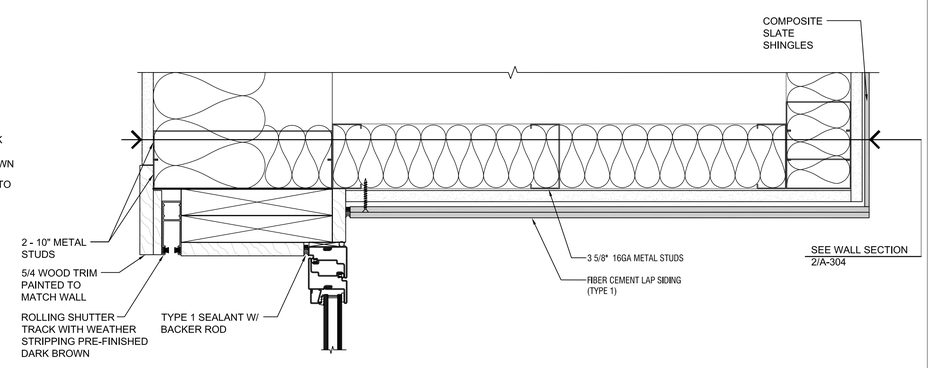

5 A-613 **WINDOW JAMB DETAIL**
3" = 1'-0"

NYS OFFICE OF GENERAL SERVICES
Serving New York

ANDREW M. CUOMO
Governor
ROANN M. DESTITO
COMMISSIONER
JAMES M. DAVIES, A.I.A.
Deputy Commissioner, Design and Construction

WARNING:
THE ALTERATION OF THIS MATERIAL IN ANY WAY, UNLESS DONE UNDER THE DIRECTION OF A COMPARABLE PROFESSIONAL, I.E. ARCHITECT FOR AN ARCHITECT, ENGINEER FOR AN ENGINEER OR LANDSCAPE ARCHITECT FOR A LANDSCAPE ARCHITECT, IS A VIOLATION OF THE NEW YORK STATE EDUCATION LAW AND/OR REGULATIONS AND IS A CLASS 'A' MISDEMEANOR.

REGISTERED ARCHITECT
JOHN ROBERT HUTTON
025156
STATE OF NEW YORK

CONTRACT:
CONSTRUCTION

TITLE:
PROVIDE CITYSCAPE COMPLEX

BUILDING NO. XXX

LOCATION:
STATE PREPAREDNESS TRAINING CENTER
5900 AIRPORT ROAD
ORISKANY, NY 13424

CLIENT:
DIVISION OF HOMELAND SECURITY
& EMERGENCY SERVICES

ADDENDUM
DRAWING
09/05/2012

MARK	DATE	DESCRIPTION
	09/05/2012	ADDENDUM NO 6
	07/05/2012	FINAL SUBMISSION

PROJECT NUMBER:	44014– C
DESIGNED BY:	XXXXX
DRAWN BY:	XXXXX
FIELD CHECK:	XXXXX
APPROVED:	XXXXX

SHEET TITLE:
WINDOW DETAILS

DRAWING NUMBER:
A–613

SHEET X OF X

Sep 07,2012 – 11:13am
V:\Designed\Contract\44014\Codarch\A-613.dwg
36x24 PLOT SHEET

1. THE CONTRACTOR IS RESPONSIBLE FOR THE REMOVAL (AS NECESSARY) AND RE-INSTALLATION OF THE BUILDING EXISTING ARCHITECTURAL CEILING SYSTEM(S). IF THE CONTRACTOR DAMAGES THE EXISTING ARCHITECTURAL CEILING OR SUPPORT SYSTEM, THE CONTRACTOR IS RESPONSIBLE FOR ITS REPAIR TO ITS ORIGINAL CONDITION. THE CONTRACTOR SHALL ENSURE THAT ALL WORK AREAS ARE CLEAN AT THE END OF WORK EACH DAY AND THAT CEILING SYSTEMS ARE BACK IN PLACE.

2. ALL CONTRACTOR, INSTALLER, AND VENDOR PERSONNEL EMPLOYED TO WORK ON THIS PROJECT THAT WILL BE OPERATING ON SITE SHALL GO THROUGH NECESSARY BACKGROUND CHECKS AND FINGERPRINTING AND BE ISSUED APPROPRIATE CREDENTIALS, PRIOR TO START OF WORK.

3. ALL INFORMATION REGARDING SECURITY SYSTEMS SHALL BE CONSIDERED SENSITIVE/CONFIDENTIAL. ALL SYSTEM INFORMATION INCLUDING SUBMITTALS, WIRING DIAGRAMS, PROGRAMMING, REPORTS, ETC., SHALL BE HANDLED IN AN EXTREMELY SENSITIVE MANNER SO THAT THE INFORMATION IS NOT TRANSMITTED TO UNAUTHORIZED PERSONS. AUTHORIZED PERSONS SHALL BE CONSIDERED THE OWNER, OWNER'S REPRESENTATIVE, INSTALLING CONTRACTOR, AND VENDOR. INSTALLATION DRAWINGS/DIAGRAMS, MANUALS, OR ANY OTHER INFORMATION REGARDING THE INSTALLATION/OPERATION OF THE SYSTEM SHALL NOT BE LEFT UNATTENDED IN THE FIELD AT ANY TIME. VIOLATIONS FOR THE MISMANAGEMENT OF SYSTEM INSTALLATION INFORMATION SHALL BE SWIFT AND SEVERE UP TO AND INCLUDING DISMISSAL FROM THE PROJECT. ALL PROJECT DOCUMENTATION WILL BE RETURNED TO OWNER AT THE COMPLETION OF THE PROJECT.

4. ALL SYSTEM TESTING AND TRAINING SHALL BE IN CONFORMANCE WITH MANUFACTURER RECOMMENDATIONS AND AS OUTLINED IN THE PROJECT SPECIFICATIONS.

5. ALL CIRCUITRY SHALL BE ENCLOSED IN 3/4" EMT CONDUIT FOR BUILDING INTERIOR LOCATIONS EXCEPT WHERE THE EXPOSED CIRCUITRY IS IMMEDIATELY TRANSITIONED TO CONDUIT WHERE IT EXITS IN THE TOP OF THE WALL ASSEMBLY. IN 3/4" PVC COATED RGS CONDUIT FOR BUILDING EXTERIOR LOCATIONS. PVC COATED FLEXIBLE METAL CONDUIT SHALL ONLY BE USED WHERE CIRCUITRY IS ENTERING BUILDING EXTERNALLY MOUNTED CAMERA ENCLOSURES OR CARD READERS MOUNTED TO FENCES OR OTHER INSTANCES WHERE PIPING RIGID CONDUIT TO A DEVICE IS NOT PRACTICAL OR POSSIBLE. OBTAIN PRIOR APPROVAL BEFORE INSTALLING PVC COATED FLEXIBLE METAL CONDUIT IN ANY OTHER INSTANCE THAN OUTLINED ABOVE. PROVIDE LARGER CONDUIT WHERE REQUIRED TO MEET NATIONAL ELECTRICAL CODE WIRE FILL REQUIREMENTS, ALWAYS LEAVING NECESSARY PERCENTAGE OF FILL FOR FUTURE CIRCUITRY. THE USE OF A METAL ARCHITECTURAL RACEWAY SYSTEM IS ALLOWED WHERE APPROVED BY THE OWNER'S REPRESENTATIVE.

6. NOT USED

7. ALL SECURITY SYSTEM MOUNTING HARDWARE AND COVER HARDWARE SHALL BE OF THE TAMPER PROOF TYPE IF THE ENCLOSURE IS NOT PROVIDED WITH A LOCK CYLINDER.

8. ANY EXTERIOR JUNCTION BOXES OR TERMINAL CABINETS SHALL BE A NEMA 4X SURFACE MOUNT BOX WITH A MOUNTING BACKPLATE, TERMINAL BLOCKS, AN INTERNAL TAMPER SWITCH CONNECTED TO THE ACCESS CONTROL SYSTEM, A HINGED COVER, AND A HEAVY DUTY LOCK CYLINDER KEYED TO THE OWNER REQUIREMENTS. FOR BOXES WHERE CONTROL HARDWARE IS TO BE LOCATED, PROVIDE PANEL HEATER/VENTILATION TO MAINTAIN MANUFACTURER MINIMUM/MAXIMUM OPERATING TEMPERATURES. PROVIDE THE APPROPRIATELY SIZED HEATER BY CHROMALOX, SL-B SERIES OR APPROVED EQUAL.

9. ALL CONTROL PANELS, POWER SUPPLIES, AND TERMINAL CABINETS SHALL BE PROVIDED WITH TAMPER SWITCHES CONNECTED TO AND MONITORED BY THE ACCESS CONTROL SYSTEM, MONITORING THE OPENING OF ANY PANEL DOOR/COVER.

10. NOT USED

11. ALL CONTROL PANELS, POWER SUPPLIES, AND OTHER CONTROL EQUIPMENT REQUIRING 120VAC PRIMARY POWER SHALL BE PROVIDED WITH A BATTERY BACK UP POWER CIRCUIT SECURED FROM THE CLOSEST POWER PANEL. ALL PANEL "PLUG-IN" STYLE TRANSFORMERS SHALL BE PROVIDED WITH A DUPLEX OUTLET WIRED TO THE CLOSEST POWER PANEL AND THE TRANSFORMER ITSELF SHALL BE PROVIDED WITH THE CIRCUITRY BETWEEN THE PANEL AND THE TRANSFORMER ENCLOSED IN EITHER RIGID CONDUIT OR PVC COATED FLEXIBLE METAL RACEWAY.

12. NOT USED

13. MAKE CABLE SHIELDS CONTINUOUS AT SPLICES AND CONNECT CIRCUIT SHIELD TO EQUIPMENT GROUND ONLY AT SOURCE END.

14. LEAVE A MINIMUM OF 18" OF EXCESS CABLE AT EACH TERMINATION AT A DEVICE AND AT A SYSTEM CONTROL PANEL OR TERMINAL CABINET.

15. ANY SYSTEM HUMAN INTERFACE DEVICE (CARD READER, KEYPAD, ETC.) SHALL BE FLUSH MOUNTED (WHERE POSSIBLE) WITH A 42" MINIMUM TO 48" MAXIMUM MOUNTING HEIGHT FOR FORWARD REACH AND A 54" MAXIMUM MOUNTING HEIGHT FOR SIDE REACH. THESE MOUNTING HEIGHTS DO NOT APPLY TO PEDESTAL MOUNTED VEHICLE HUMAN INTERFACE DEVICES.

16. GROUND AND BOND ALL SECURITY EQUIPMENT CIRCUITS IN ACCORDANCE WITH DIVISION 26 SPECIFICATIONS.

17. ALL SECURITY EQUIPMENT AND PANELS SHALL BE SURGE PROTECTED IN ACCORDANCE WITH NFPA 70 AND IEEE C62.41 B3. ALL CIRCUITS ENTERING AND LEAVING CONTROL PANELS, TERMINAL CABINETS, AND BUILDINGS SHALL BE PROVIDED WITH APPROPRIATELY SIZED, MANUFACTURER RECOMMENDED SURGE SUPPRESSORS. FUSES SHALL NOT BE USED FOR SURGE PROTECTION. POWER LINE SURGE SUPPRESSION FOR ALTERNATING CURRENT CIRCUITS SHALL BE RATED FOR A MAXIMUM LET THRU VOLTAGE OF 350VAC (LINE TO NEUTRAL) AND 350VAC (NEUTRAL TO GROUND). LOW VOLTAGE SURGE SUPPRESSION FOR DIRECT CURRENT CIRCUITS SHALL BE RATED FOR A MAXIMUM DC CLAMPING VOLTAGE OF 36 VDC (LINE TO GROUND) AND 72 VOLTS DC (LINE TO LINE).

18. SECURITY SYSTEMS SHALL INCLUDE FULL IDENTIFICATION. ALL JUNCTION, TERMINAL, AND PULLING BOXES AND COVERS SHALL BE PAINTED BLUE. ALL COVERS LOCATED IN EXPOSED LOCATIONS SHALL BE PAINTED TO MATCH SURROUNDING FINISHES AND SHALL BE PROVIDED WITH A SMALL BLUE STICKER IN THE SHAPE OF A CIRCLE. IN NO CASE SHALL JUNCTION OR TERMINAL BOXES BE LABELED AS CONTAINING SECURITY CIRCUITRY OR EQUIPMENT.

19. THE CONTRACTOR IS RESPONSIBLE FOR OBTAINING ALL NECESSARY PERMITS AND HAVING ALL NECESSARY ELECTRICAL INSPECTIONS CONDUCTED IN CONFORMANCE WITH STATE AND LOCAL REGULATIONS. ALL ELECTRICAL WORK SHALL BE INSPECTED BY THE OWNER DIRECTED ELECTRICAL INSPECTOR..

20. THE CONTRACTOR SHALL "MOCK UP" EACH CAMERA LOCATION INSTALLATION PRIOR TO PERMANENT INSTALLATION AND ALLOW THE OWNER AND OWNER'S REPRESENTATIVE TO VIEW THE CAMERA PICTURE FOR FINAL APPROVAL PRIOR TO PERMANENT INSTALLATION.

21. ALL WALL AND FLOOR PENETRATIONS LOCATED WITHIN BUILDINGS FOR SECURITY RACEWAY SHALL BE FULLY SLEEVED AND SEALED. SLEEVE SHALL BE A MINIMUM OF SCHEDULE 40 STEEL AND PROTRUDE A MINIMUM OF 4" ON EITHER SIDE OF THE WALL OR FLOOR SURFACE WITH A TRIM RING. ALL PENETRATIONS THROUGH FIRE RATED ASSEMBLIES SHALL BE APPROPRIATELY FIRESTOPPED WITH A UL. RATED SYSTEM IN ACCORDANCE WITH DIVISION 7 SPECIFICATION. ALL FIRESTOPPING MATERIALS/SEALANTS SHALL BE OF THE LOW VOC TYPE. SUBMIT INFORMATION FROM THE FIRESTOPPING MATERIAL MANUFACTURER ENSURING THEIR MATERIALS HAVE LOW EMITTING VOC CHARACTERISTICS. THE CONTRACTOR APPLYING FIRESTOPPING IMPLEMENTS/MATERIALS SHALL BE FM 4991 APPROVED, UL QUALIFIED, OR PROVIDE SUFFICIENT PROOF OF TRAINING AND EXPERIENCE IN THE APPLICATION OF FIRESTOPPING MATERIALS TO THE OWNER'S REPRESENTATIVE.

22. THE SECURITY EQUIPMENT COMPUTER NETWORK INTERFACES SHOWN ARE GENERAL AND ARE NOT INTENDED TO SHOW A DETAILED NETWORK TOPOLOGY. THE ACTUAL NETWORK CONNECTIONS MAY DIFFER, REQUIRING CHANGES OR PERHAPS ADDITIONAL NETWORK EQUIPMENT TO ACCOMMODATE THE SYSTEMS AS ILLUSTRATED. CLOSELY COORDINATE NETWORK INTERFACE REQUIREMENTS AND PROGRAMMING OF IP ADDRESSES WITH THE EQUIPMENT MANUFACTURERS AND THE OWNER. DO NOT CONNECT SECURITY EQUIPMENT TO OWNER NETWORK WITHOUT AN OWNER IT REPRESENTATIVE ON SITE AND WITH A MINIMUM OF 72 HOURS WRITTEN NOTICE.

23. ALL ENCLOSURES INCLUDING NETWORK RACKS ARE TO HAVE TAMPER SWITCHES INSTALLED AND CONNECTED TO THE SECURITY NETWORK TO MONITOR FOR UNAUTHORIZED ACCESS,

24. ALL MOTION DETECTORS, DOOR CONTACTS, AND OTHER INTRSUION/ACCESS CONTROL HARDWARE TO BE PROVIDED BY OTHERS UNDER A SEPARATE CONTRACT. THE ACCESS CONTROL/INTRUSION DETECTION PORTION OF THIS CONTRACT SHALL BE FOR INFRASTRUCTURE ONLY. THIS WILL INCLUDE ALL WIRING, CONDUIT, TRENCHING, ETC. ALL CONDUITS SHALL NOT EXCEED 40% FILL CAPACITY.

2

2 GENERAL NOTES
NOT TO SCALE

SYMBOL	DESCRIPTION
XX	ACCESS CONTROL REFERENCE NUMBER
XX	SECURITY CAMERA REFERENCE NUMBER
XX	MOTION DETECTOR REFERENCE NUMBER
	FIXED MEGAPIXEL IP CAMERA
OR	MOTION DETECTOR
	KEYPAD
	DOOR CONTACT
	DURESS BUTTON TO NOTIFY TRAINING SYSTEM OF MOCK BANK ROBBERY

2

2

1 SECURITY LEGEND
NOT TO SCALE

Sep 05,2012 – 2:29pm
F:\Project\190 – NYSOGS\190429G34–cityscape\Design\CADD\Sheet Files\Security\A02_EY_001.dwg
36x24 PLOT SHEET

NYS OFFICE OF GENERAL SERVICES
Serving New York
ANDREW M. CUOMO
Governor
ROANN M. DESTITO
COMMISSIONER
JAMES M. DAVIES, A.I.A.
Deputy Commissioner, Design and Construction

CONSULTANT

C&S COMPANIES®
C&S Engineers, Inc.
499 Col. Eileen Collins Blvd.
Syracuse, New York 13212
Phone: 315-455-2000
Fax: 315-455-9667
www.cscos.com

WARNING:
THE ALTERATION OF THIS MATERIAL IN ANY WAY, UNLESS DONE UNDER THE DIRECTION OF A COMPARABLE PROFESSIONAL, I.E. ARCHITECT FOR AN ARCHITECT, ENGINEER FOR AN ENGINEER OR LANDSCAPE ARCHITECT FOR A LANDSCAPE ARCHITECT, IS A VIOLATION OF THE NEW YORK STATE EDUCATION LAW AND/OR REGULATIONS AND IS A CLASS "A" MISDEMEANOR.

STATE OF NEW YORK · DOUGLAS J. OBRIST · 078027 · LICENSED PROFESSIONAL ENGINEER

CONTRACT:

TITLE:
PROVIDE CITYSCAPE COMPLEX

LOCATION:
STATE PREPAREDNESS TRAINING CENTER
5900 AIRPORT ROAD
ORISKANY, NY 13424

CLIENT:
DIVISION OF HOMELAND SECURITY & EMERGENCY SERVICES

REVISED DRAWING
9/5/2012

MARK	DATE	DESCRIPTION
2	09/05/2012	ADDENDUM NO 6
	07/05/2012	FINAL SUBMISSION
	06/11/2012	100% SUBMISSION

PROJECT NUMBER:	44014 – E
DESIGNED BY:	JMW
DRAWN BY:	JMW
FIELD CHECK:	TLH
APPROVED:	TLH

SHEET TITLE: ELECTRICAL
GENERAL NOTES AND SYMBOLS

DRAWING NUMBER:
EY-001

SHEET OF

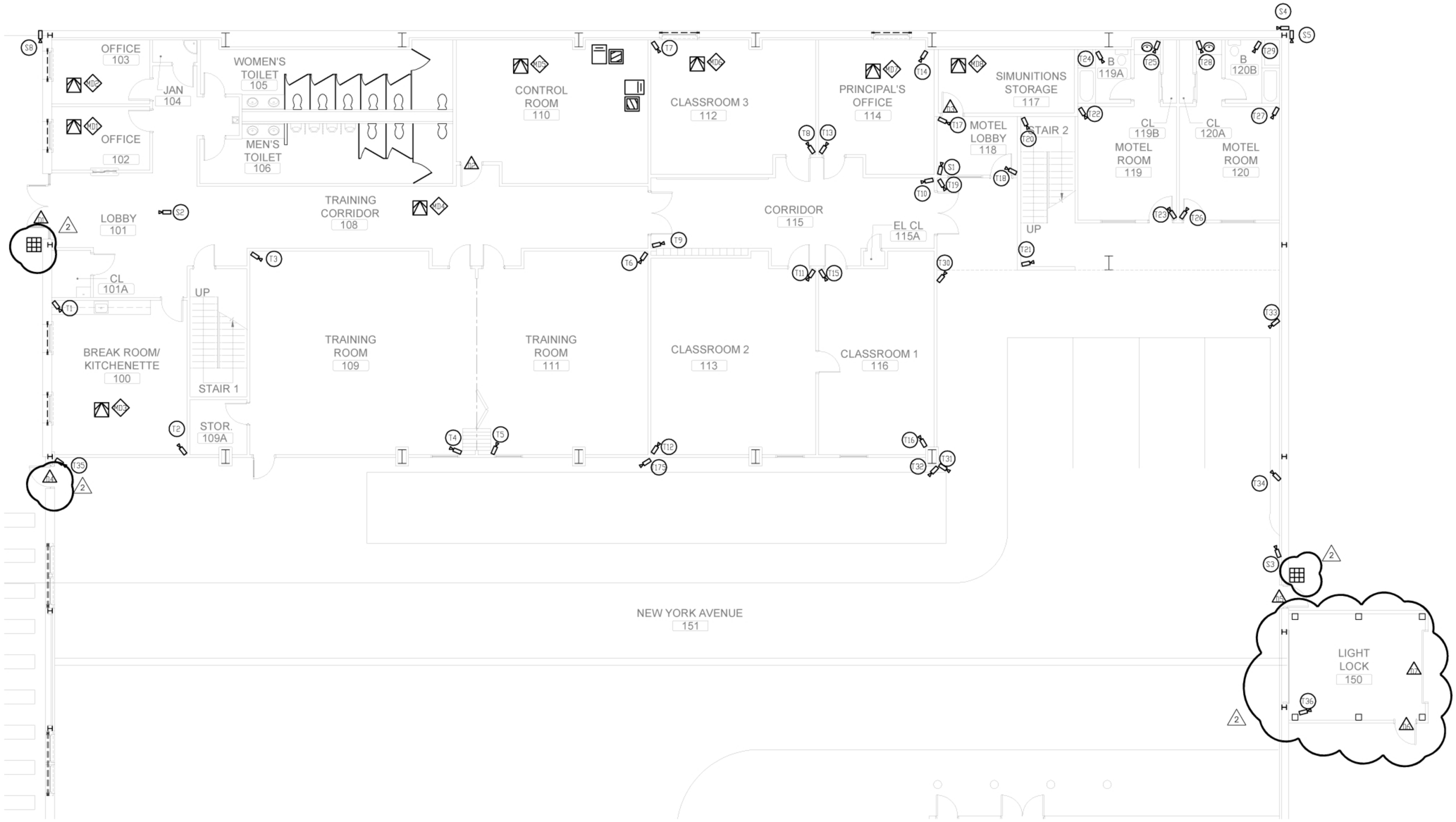

1 NORTH FIRST FLOOR PLAN
1/8" = 1'-0"

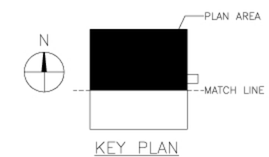

KEY PLAN

NYS OFFICE OF GENERAL SERVICES
Serving New York

ANDREW M. CUOMO
Governor
ROANN M. DESTITO
COMMISSIONER
JAMES M. DAVIES, A.I.A.
Deputy Commissioner, Design and Construction

CONSULTANT

C&S COMPANIES®

C&S Engineers, Inc.
499 Col. Eileen Collins Blvd.
Syracuse, New York 13212
Phone: 315-455-2000
Fax: 315-455-9667
www.cscos.com

WARNING:
THE ALTERATION OF THIS MATERIAL IN ANY WAY, UNLESS DONE UNDER THE DIRECTION OF A COMPARABLE PROFESSIONAL, I.E. ARCHITECT FOR AN ARCHITECT, ENGINEER FOR AN ENGINEER OR LANDSCAPE ARCHITECT FOR A LANDSCAPE ARCHITECT, IS A VIOLATION OF THE NEW YORK STATE EDUCATION LAW AND/OR REGULATIONS AND IS A CLASS "A" MISDEMEANOR.

STATE OF NEW YORK · DOUGLAS J. OBRIST · 078077 · LICENSED PROFESSIONAL ENGINEER

CONTRACT:

TITLE:
PROVIDE CITYSCAPE COMPLEX

LOCATION:
STATE PREPAREDNESS TRAINING CENTER
5900 AIRPORT ROAD
ORISKANY, NY 13424

CLIENT:
DIVISION OF HOMELAND SECURITY & EMERGENCY SERVICES

REVISED DRAWING
9/5/2012

MARK	DATE	DESCRIPTION
2	09/05/2012	ADDENDUM NO 6
	07/05/2012	FINAL SUBMISSION
	06/11/2012	100% SUBMISSION

PROJECT NUMBER:	44014 – E
DESIGNED BY:	JMW
DRAWN BY:	JMW
FIELD CHECK:	TLH
APPROVED:	TLH

SHEET TITLE: ELECTRICAL
NORTH FIRST FLOOR PLAN

DRAWING NUMBER:
EY-104

SHEET OF

Sep 05,2012 – 2:32pm
F:\Project\190 – NYSOGS\190428034-cityscape\Design\CADD\Sheet Files\Security\A02_EY_104.dwg
36x24 PLOT SHEET

CAMERA LOCATION	CAMERA NUMBER	CAMERA TYPE	SWITCH LOCATION	MOUNTING	CAMERA FORMAT	VIEWING DISTANCE	FIELD OF VIEW	LENS FOCAL LENGTH (IN MILLIMETERS)	CAMERA MODEL	MIDSPAN/ POWER SUPPLY	REMARKS/ACCESSORIES
ROOM 100	T1	FIXED	ROOM 129A	CEILING	1/3"	27'	42'	VARIFOCAL 3 – 9MM	AXIS MODEL P3346–V	N/A	N/A
ROOM 100	T2	FIXED	ROOM 129A	CEILING	1/3"	27'	42'	VARIFOCAL 3 – 9MM	AXIS MODEL P3346–V	N/A	N/A
ROOM 109	T3	FIXED	ROOM 129A	CEILING	1/3"	43'	65'	VARIFOCAL 3 – 9MM	AXIS MODEL P3346–V	N/A	N/A
ROOM 109	T4	FIXED	ROOM 129A	CEILING	1/3"	42'	59'	VARIFOCAL 3 – 9MM	AXIS MODEL P3346–V	N/A	N/A
ROOM 111	T5	FIXED	ROOM 129A	CEILING	1/3"	32'	37'	VARIFOCAL 3 – 9MM	AXIS MODEL P3346–V	N/A	N/A
ROOM 111	T6	FIXED	ROOM 129A	CEILING	1/3"	34'	50'	VARIFOCAL 3 – 9MM	AXIS MODEL P3346–V	N/A	N/A
ROOM 112	T7	FIXED	ROOM 129A	CEILING	1/3"	28'	41'	VARIFOCAL 3 – 9MM	AXIS MODEL P3346–V	N/A	N/A
ROOM 112	T8	FIXED	ROOM 129A	CEILING	1/3"	26'	41'	VARIFOCAL 3 – 9MM	AXIS MODEL P3346–V	N/A	N/A
ROOM 115	T9	FIXED	ROOM 129A	CEILING	1/3"	40'	22'	VARIFOCAL 3 – 9MM	AXIS MODEL P3346–V	N/A	N/A
ROOM 115	T10	FIXED	ROOM 129A	CEILNG	1/3"	40'	22'	VARIFOCAL 3 – 9MM	AXIS MODEL P3346–V	N/A	N/A
ROOM 113	T11	FIXED	ROOM 129A	CEILING	1/3"	34'	50'	VARIFOCAL 3 – 9MM	AXIS MODEL P3346–V	N/A	N/A
ROOM 113	T12	FIXED	ROOM 129A	CEILING	1/3"	34'	50'	VARIFOCAL 3 – 9MM	AXIS MODEL P3346–V	N/A	N/A
ROOM 114	T13	FIXED	ROOM 129A	CEILING	1/3"	19'	30'	VARIFOCAL 3 – 9MM	AXIS MODEL P3346–V	N/A	N/A
ROOM 114	T14	FIXED	ROOM 129A	CEILING	1/3"	19'	30'	VARIFOCAL 3 – 9MM	AXIS MODEL P3346–V	N/A	N/A
ROOM 116	T15	FIXED	ROOM 129A	CEILING	1/3"	29'	38'	VARIFOCAL 3 – 9MM	AXIS MODEL P3346–V	N/A	N/A
ROOM 116	T16	FIXED	ROOM 129A	CEILING	1/3"	29'	36'	VARIFOCAL 3 – 9MM	AXIS MODEL P3346–V	N/A	N/A
ROOM 118	T17	FIXED	ROOM 129A	CEILING	1/3"	12'	15'	VARIFOCAL 3 – 9MM	AXIS MODEL P3346–V	N/A	N/A
ROOM 118	T18	FIXED	ROOM 129A	CEILING	1/3"	12'	15'	VARIFOCAL 3 – 9MM	AXIS MODEL P3346–V	N/A	N/A
N. ALLEY	T19	FIXED	ROOM 129A	WALL	1/3"	32'	40'	VARIFOCAL 3 – 9MM	AXIS MODEL P3346–V	N/A	N/A
STAIRCASE 2	T20	FIXED	ROOM 129A	CEILING	1/3"	19'	21'	VARIFOCAL 3 – 9MM	AXIS MODEL P3346–V	N/A	N/A
STAIRCASE 2	T21	FIXED	ROOM 129A	WALL	1/3"	36'	21'	VARIFOCAL 3 – 9MM	AXIS MODEL P3346–V	N/A	N/A
ROOM 119	T22	FIXED	ROOM 129A	CEILING	1/3"	20'	30'	VARIFOCAL 3 – 9MM	AXIS MODEL P3346–V	N/A	N/A
ROOM 119	T23	FIXED	ROOM 129A	CEILING	1/3"	20'	30'	VARIFOCAL 3 – 9MM	AXIS MODEL P3346–V	N/A	N/A
ROOM 119A	T24	FIXED	ROOM 129A	CEILING	1/3"	'7	11'	VARIFOCAL 3 – 9MM	AXIS MODEL P3346–V	N/A	N/A
ROOM 119A	T25	FIXED	ROOM 129A	CEILING	1/3"	7'	11'	VARIFOCAL 3 – 9MM	AXIS MODEL P3346–V	N/A	N/A
ROOM 120	T26	FIXED	ROOM 129A	CEILING	1/3"	19'	30'	VARIFOCAL 3 – 9MM	AXIS MODEL P3346–V	N/A	N/A
ROOM 120	T27	FIXED	ROOM 129A	CEILING	1/3"	18'	28'	VARIFOCAL 3 – 9MM	AXIS MODEL P3346–V	N/A	N/A
ROOM 120B	T28	FIXED	ROOM 129A	CEILING	1/3"	7'	11'	VARIFOCAL 3 – 9MM	AXIS MODEL P3346–V	N/A	N/A
ROOM 120B	T29	FIXED	ROOM 129A	CEILING	1/3"	7'	11'	VARIFOCAL 3 – 9MM	AXIS MODEL P3346–V	N/A	N/A
STREET N	T30	FIXED	ROOM 129A	WALL	1/3"	18'	17'	VARIFOCAL 3 – 9MM	AXIS MODEL P3346–V	N/A	N/A
STREET N.	T31	FIXED	ROOM 129A	WALL	1/3"	55'	44'	VARIFOCAL 3 – 9MM	AXIS MODEL P3346–V	N/A	N/A
STREET N.	T32	FIXED	ROOM 129A	WALL	1/3"	47'	69'	VARIFOCAL 3 – 9MM	AXIS MODEL P3346–V	N/A	N/A
STREET N.E.	T33	FIXED	ROOM 129A	WALL	1/3"	42'	64'	VARIFOCAL 3 – 9MM	AXIS MODEL P3346–V	N/A	N/A
STREET N.E.	T34	FIXED	ROOM 129A	WALL	1/3"	42'	64'	VARIFOCAL 3 – 9MM	AXIS MODEL P3346–V	N/A	N/A
STREET N.W.	T35	FIXED	ROOM 129A	WALL	1/3"	43'	58'	VARIFOCAL 3 – 9MM	AXIS MODEL P3346–V	N/A	N/A
ROOM 150	T36	FIXED	ROOM 129A	CEILING	1/3"	22'	17'	VARIFOCAL 3 – 9MM	AXIS MODEL P3346–V	N/A	N/A
STREET S.W.	T37	FIXED	ROOM 129A	WALL	1/3"	47'	54'	VARIFOCAL 3 – 9MM	AXIS MODEL P3346–V	N/A	N/A
STREET S.W.	T38	FIXED	ROOM 129A	WALL	1/3"	43'	58'	VARIFOCAL 3 – 9MM	AXIS MODEL P3346–V	N/A	N/A
ROOM 149	T39	FIXED	ROOM 129A	CEILING	1/3"	33'	40'	VARIFOCAL 3 – 9MM	AXIS MODEL P3346–V	N/A	N/A
ROOM 149	T40	FIXED	ROOM 129A	CEILING	1/3"	32'	40'	VARIFOCAL 3 – 9MM	AXIS MODEL P3346–V	N/A	N/A
ROOM 148	T41	FIXED	ROOM 129A	CEILING	1/3"	32'	44'	VARIFOCAL 3 – 9MM	AXIS MODEL P3346–V	N/A	N/A
STAIRCASE 7	T42	FIXED	ROOM 129A	CEILING	1/3"	25'	20'	VARIFOCAL 3 – 9MM	AXIS MODEL P3346–V	N/A	N/A
ROOM 145	T43	FIXED	ROOM 129A	CEILING	1/3"	23'	34'	VARIFOCAL 3 – 9MM	AXIS MODEL P3346–V	N/A	N/A
ROOM 145	T44	FIXED	ROOM 129A	CEILING	1/3"	22'	37'	VARIFOCAL 3 – 9MM	AXIS MODEL P3346–V	N/A	N/A
ROOM 145	T45	FIXED	ROOM 129A	CEILING	1/3"	22'	33'	VARIFOCAL 3 – 9MM	AXIS MODEL P3346–V	N/A	N/A
ROOM 147	T46	FIXED	ROOM 129A	CEILING	1/3"	10'	12'	VARIFOCAL 3 – 9MM	AXIS MODEL P3346–V	N/A	N/A
ROOM 147	T47	FIXED	ROOM 129A	CEILING	1/3"	10'	12'	VARIFOCAL 3 – 9MM	AXIS MODEL P3346–V	N/A	N/A
ROOM 146	T48	FIXED	ROOM 129A	CEILING	1/3"	10'	12'	VARIFOCAL 3 – 9MM	AXIS MODEL P3346–V	N/A	N/A
ROOM 146	T49	FIXED	ROOM 129A	CEILING	1/3"	10'	12'	VARIFOCAL 3 – 9MM	AXIS MODEL P3346–V	N/A	N/A
STAIRCASE 6	T50	FIXED	ROOM 129A	CEILING	1/3"	12'	18'	VARIFOCAL 3 – 9MM	AXIS MODEL P3346–V	N/A	N/A
ROOM 143	T51	FIXED	ROOM 129A	CEILING	1/3"	22'	32'	VARIFOCAL 3 – 9MM	AXIS MODEL P3346–V	N/A	N/A
ROOM 144	T52	FIXED	ROOM 129A	CEILING	1/3"	13'	14'	VARIFOCAL 3 – 9MM	AXIS MODEL P3346–V	N/A	N/A
ROOM 144	T53	FIXED	ROOM 129A	CEILING	1/3"	12'	14'	VARIFOCAL 3 – 9MM	AXIS MODEL P3346–V	N/A	N/A
ROOM 144	T54	FIXED	ROOM 129A	CEILING	1/3"	13'	14'	VARIFOCAL 3 – 9MM	AXIS MODEL P3346–V	N/A	N/A
ROOM 145	T55	FIXED	ROOM 129A	CEILING	1/3"	6'	8'	VARIFOCAL 3 – 9MM	AXIS MODEL P3346–V	N/A	N/A
ROOM 145	T56	FIXED	ROOM 129A	CEILING	1/3"	17'	16'	VARIFOCAL 3 – 9MM	AXIS MODEL P3346–V	N/A	N/A
ALLEY 142	T57	FIXED	ROOM 200	CEILING	1/3"	26'	22'	VARIFOCAL 3 – 9MM	AXIS MODEL P3346–V	N/A	N/A
ALLEY 142	T58	FIXED	ROOM 129A	WALL	1/3"	22'	14'	VARIFOCAL 3 – 9MM	AXIS MODEL P3346–V	N/A	N/A
ALLEY 142	T59	FIXED	ROOM 129A	WALL	1/3"	10'	10'	VARIFOCAL 3 – 9MM	AXIS MODEL P3346–V	N/A	N/A
ALLEY 142	T60	FIXED	ROOM 129A	WALL	1/3"	21'	22'	VARIFOCAL 3 – 9MM	AXIS MODEL P3346–V	N/A	N/A
ALLEY 142	T61	FIXED	ROOM 129A	WALL	1/3"	19'	21'	VARIFOCAL 3 – 9MM	AXIS MODEL P3346–V	N/A	N/A
STAIRCASE 4	T62	FIXED	ROOM 129A	WALL	1/3"	21'	12'	VARIFOCAL 3 – 9MM	AXIS MODEL P3346–V	N/A	N/A
ROOM 140	T63	FIXED	ROOM 129A	CEILING	1/3"	27'	29'	VARIFOCAL 3 – 9MM	AXIS MODEL P3346–V	N/A	N/A
ROOM 140	T64	FIXED	ROOM 129A	CEILING	1/3"	26'	30'	VARIFOCAL 3 – 9MM	AXIS MODEL P3346–V	N/A	N/A
ROOM 135	T65	FIXED	ROOM 129A	CEILING	1/3"	11'	8'	VARIFOCAL 3 – 9MM	AXIS MODEL P3346–V	N/A	N/A
ROOM 135	T66	FIXED	ROOM 129A	CEILING	1/3"	7'	11'	VARIFOCAL 3 – 9MM	AXIS MODEL P3346–V	N/A	N/A
ROOM 135	T67	FIXED	ROOM 129A	CEILING	1/3"	7'	11'	VARIFOCAL 3 – 9MM	AXIS MODEL P3346–V	N/A	N/A

2

ROOM 136	T69	FIXED	ROOM 129A	CEILING	1/3"	25'	27'	VARIFOCAL 3 – 9MM	AXIS MODEL P3346–V	N/A	N/A
ROOM 136	T70	FIXED	ROOM 129A	CEILING	1/3"	26'	27'	VARIFOCAL 3 – 9MM	AXIS MODEL P3346–V	N/A	N/A
ROOM 134	T71	FIXED	ROOM 129A	CEILING	1/3"	33'	28'	VARIFOCAL 3 – 9MM	AXIS MODEL P3346–V	N/A	N/A
ROOM 148	T72	FIXED	ROOM 129A	CEILING	1/3"	32'	42'	VARIFOCAL 3 – 9MM	AXIS MODEL P3346–V	N/A	N/A
ROOM 134	T73	FIXED	ROOM 129A	CEILING	1/3"	33'	28'	VARIFOCAL 3 – 9MM	AXIS MODEL P3346–V	N/A	N/A
ROOM 130	T74	FIXED	ROOM 129A	CEILING	1/3"	24'	34'	VARIFOCAL 3 – 9MM	AXIS MODEL P3346–V	N/A	N/A
ROOM 130	T75	FIXED	ROOM 129A	CEILING	1/3"	30'	43'	VARIFOCAL 3 – 9MM	AXIS MODEL P3346–V	N/A	N/A

ROOM 135	T77	FIXED	ROOM 129A	CEILING	1/3"	21'	17'	VARIFOCAL 3 – 9MM	AXIS MODEL P3346–V	N/A	N/A
ROOM 133	T78	FIXED	ROOM 129A	CEILING	1/3"	11'	8'	VARIFOCAL 3 – 9MM	AXIS MODEL P3346–V	N/A	N/A
ROOM 133	T79	FIXED	ROOM 129A	CEILING	1/3"	11'	8'	VARIFOCAL 3 – 9MM	AXIS MODEL P3346–V	N/A	N/A
ROOM 131	T80	FIXED	ROOM 129A	CEILING	1/3"	7'	11'	VARIFOCAL 3 – 9MM	AXIS MODEL P3346–V	N/A	N/A
ROOM 132	T81	FIXED	ROOM 129A	CEILING	1/3"	7'	11'	VARIFOCAL 3 – 9MM	AXIS MODEL P3346–V	N/A	N/A
STAIRCASE 3	T82	FIXED	ROOM 129A	CEILING	1/3"	10'	6'	VARIFOCAL 3 – 9MM	AXIS MODEL P3346–V	N/A	N/A
ROOM 129	T83	FIXED	ROOM 129A	CEILING	1/3"	28'	29'	VARIFOCAL 3 – 9MM	AXIS MODEL P3346–V	N/A	N/A
ROOM 129	T84	FIXED	ROOM 129A	CEILING	1/3"	32'	18'	VARIFOCAL 3 – 9MM	AXIS MODEL P3346–V	N/A	N/A

ROOM 128	T86	FIXED	ROOM 129A	CEILING	1/3"	16'	10'	VARIFOCAL 3 – 9MM	AXIS MODEL P3346–V	N/A	N/A
ROOM 128	T87	FIXED	ROOM 129A	CEILING	1/3"	15'	10'	VARIFOCAL 3 – 9MM	AXIS MODEL P3346–V	N/A	N/A
ROOM 126	T88	FIXED	ROOM 129A	CEILING	1/3"	12'	19'	VARIFOCAL 3 – 9MM	AXIS MODEL P3346–V	N/A	N/A
ROOM 126	T89	FIXED	ROOM 129A	CEILING	1/3"	14'	11'	VARIFOCAL 3 – 9MM	AXIS MODEL P3346–V	N/A	N/A
ROOM 130	T90	FIXED	ROOM 129A	CEILING	1/3"	18'	16'	VARIFOCAL 3 – 9MM	AXIS MODEL P3346–V	N/A	N/A
ROOM 129	T91	FIXED	ROOM 129A	CEILING	1/3"	25'	30'	VARIFOCAL 3 – 9MM	AXIS MODEL P3346–V	N/A	N/A
ROOM 126	T92	FIXED	ROOM 129A	CEILING	1/3"	11'	14'	VARIFOCAL 3 – 9MM	AXIS MODEL P3346–V	N/A	N/A

CAMERA LOCATION	CAMERA NUMBER	CAMERA TYPE	SWITCH LOCATION	MOUNTING	CAMERA FORMAT	VIEWING DISTANCE	FIELD OF VIEW	LENS FOCAL LENGTH (IN MILLIMETERS)	CAMERA MODEL	MIDSPAN/ POWER SUPPLY	REMARKS/ACCESSORIES
ROOM 125	T93	FIXED	ROOM 129A	CEILING	1/3"	12'	10'	VARIFOCAL 3 – 9MM	AXIS MODEL P3346–V	N/A	N/A
ROOM 125	T94	FIXED	ROOM 129A	CEILING	1/3"	12'	11'	VARIFOCAL 3 – 9MM	AXIS MODEL P3346–V	N/A	N/A
ROOM 124	T95	FIXED	ROOM 129A	CEILING	1/3"	12'	10'	VARIFOCAL 3 – 9MM	AXIS MODEL P3346–V	N/A	N/A
ROOM 124	T96	FIXED	ROOM 129A	CEILING	1/3"	12'	10'	VARIFOCAL 3 – 9MM	AXIS MODEL P3346–V	N/A	N/A
ROOM 123	T97	FIXED	ROOM 129A	CEILING	1/3"	12'	10'	VARIFOCAL 3 – 9MM	AXIS MODEL P3346–V	N/A	N/A
ROOM 123	T98	FIXED	ROOM 129A	CEILING	1/3"	12'	10'	VARIFOCAL 3 – 9MM	AXIS MODEL P3346–V	N/A	N/A
ROOM 121	T99	FIXED	ROOM 129A	CEILING	1/3"	42'	42'	VARIFOCAL 3 – 9MM	AXIS MODEL P3346–V	N/A	N/A
ROOM 121	T100	FIXED	ROOM 129A	CEILING	1/3"	41'	45'	VARIFOCAL 3 – 9MM	AXIS MODEL P3346–V	N/A	N/A
ROOM 128	T101	FIXED	ROOM 129A	CEILING	1/3"	16'	10'	VARIFOCAL 3 – 9MM	AXIS MODEL P3346–V	N/A	N/A
ROOM 121	T102	FIXED	ROOM 129A	CEILING	1/3"	40'	50'	VARIFOCAL 3 – 9MM	AXIS MODEL P3346–V	N/A	N/A
ROOM 121	T103	FIXED	ROOM 129A	CEILING	1/3"	44'	47'	VARIFOCAL 3 – 9MM	AXIS MODEL P3346–V	N/A	N/A
ROOM 121A	T104	FIXED	ROOM 129A	CEILING	1/3"	24'	13'	VARIFOCAL 3 – 9MM	AXIS MODEL P3346–V	N/A	N/A
ROOM 121A	T105	FIXED	ROOM 129A	CEILING	1/3"	24'	13'	VARIFOCAL 3 – 9MM	AXIS MODEL P3346–V	N/A	N/A
ROOM 121A	T106	FIXED	ROOM 129A	CEILING	1/3"	12'	9'	VARIFOCAL 3 – 9MM	AXIS MODEL P3346–V	N/A	N/A
ROOM 122	T107	FIXED	ROOM 129A	CEILING	1/3"	33'	45'	VARIFOCAL 3 – 9MM	AXIS MODEL P3346–V	N/A	N/A
ROOM 122	T108	FIXED	ROOM 129A	CEILING	1/3"	33'	43'	VARIFOCAL 3 – 9MM	AXIS MODEL P3346–V	N/A	N/A
ROOM 122	T109	FIXED	ROOM 129A	CEILING	1/3"	34'	42'	VARIFOCAL 3 – 9MM	AXIS MODEL P3346–V	N/A	N/A
STREET S.W.	T110	FIXED	ROOM 129A	WALL	1/3"	47'	64'	VARIFOCAL 3 – 9MM	AXIS MODEL P3346–V	N/A	N/A
STREET S.	T111	FIXED	ROOM 129A	WALL	1/3"	38'	59'	VARIFOCAL 3 – 9MM	AXIS MODEL P3346–V	N/A	N/A
STREET S.	T112	FIXED	ROOM 129A	WALL	1/3"	55'	55'	VARIFOCAL 3 – 9MM	AXIS MODEL P3346–V	N/A	N/A
STREET S.E.	T113	FIXED	ROOM 129A	WALL	1/3"	32'	50'	VARIFOCAL 3 – 9MM	AXIS MODEL P3346–V	N/A	N/A
STREET S.E.	T114	FIXED	ROOM 129A	WALL	1/3"	50'	68'	VARIFOCAL 3 – 9MM	AXIS MODEL P3346–V	N/A	N/A
STREET S.E.	T115	FIXED	ROOM 129A	WALL	1/3"	28'	45'	VARIFOCAL 3 – 9MM	AXIS MODEL P3346–V	N/A	N/A
ROOM 202	T116	FIXED	ROOM 200	CEILING	1/3"	28'	45'	VARIFOCAL 3 – 9MM	AXIS MODEL P3346–V	N/A	N/A
ROOM 202	T117	FIXED	ROOM 200	CEILING	1/3"	37'	56'	VARIFOCAL 3 – 9MM	AXIS MODEL P3346–V	N/A	N/A
ROOM 202	T118	FIXED	ROOM 200	CEILING	1/3"	48'	56'	VARIFOCAL 3 – 9MM	AXIS MODEL P3346–V	N/A	N/A
ROOM 202	T119	FIXED	ROOM 200	CEILING	1/3"	54'	36'	VARIFOCAL 3 – 9MM	AXIS MODEL P3346–V	N/A	N/A
ROOM 202	T120	FIXED	ROOM 200	CEILING	1/3"	56'	82'	VARIFOCAL 3 – 9MM	AXIS MODEL P3346–V	N/A	N/A
ROOM 202	T121	FIXED	ROOM 200	CEILING	1/3"	36'	57'	VARIFOCAL 3 – 9MM	AXIS MODEL P3346–V	N/A	N/A
ROOM 203	T122	FIXED	ROOM 200	CEILING	1/3"	28'	28'	VARIFOCAL 3 – 9MM	AXIS MODEL P3346–V	N/A	N/A
ROOM 203	T123	FIXED	ROOM 200	CEILING	1/3"	28'	28'	VARIFOCAL 3 – 9MM	AXIS MODEL P3346–V	N/A	N/A
ROOM 204	T124	FIXED	ROOM 200	CEILING	1/3"	28'	28'	VARIFOCAL 3 – 9MM	AXIS MODEL P3346–V	N/A	N/A
ROOM 204	T125	FIXED	ROOM 200	CEILING	1/3"	27'	28'	VARIFOCAL 3 – 9MM	AXIS MODEL P3346–V	N/A	N/A
ROOM 206	T126	FIXED	ROOM 200	CEILING	1/3"	25'	22'	VARIFOCAL 3 – 9MM	AXIS MODEL P3346–V	N/A	N/A
ROOM 206	T127	FIXED	ROOM 200	CEILING	1/3"	24'	24'	VARIFOCAL 3 – 9MM	AXIS MODEL P3346–V	N/A	N/A
ROOM 206A	T128	FIXED	ROOM 200	CEILING	1/3"	25'	20'	VARIFOCAL 3 – 9MM	AXIS MODEL P3346–V	N/A	N/A
ROOM 206A	T129	FIXED	ROOM 200	CEILING	1/3"	25'	21'	VARIFOCAL 3 – 9MM	AXIS MODEL P3346–V	N/A	N/A
ROOM 207	T130	FIXED	ROOM 200	CEILING	1/3"	34'	32'	VARIFOCAL 3 – 9MM	AXIS MODEL P3346–V	N/A	N/A
ROOM 207	T131	FIXED	ROOM 200	CEILING	1/3"	34'	32'	VARIFOCAL 3 – 9MM	AXIS MODEL P3346–V	N/A	N/A
ROOM 208	T132	FIXED	ROOM 200	CEILING	1/3"	25'	38'	VARIFOCAL 3 – 9MM	AXIS MODEL P3346–V	N/A	N/A
ROOM 211	T133	FIXED	ROOM 200	CEILING	1/3"	35'	40'	VARIFOCAL 3 – 9MM	AXIS MODEL P3346–V	N/A	N/A

STREET N.	T134	FIXED	ROOM 200	WALL	1/3"	21'	27'	VARIFOCAL 3 – 9MM	AXIS MODEL P3346–V	N/A	N/A

ROOM 208	T136	FIXED	ROOM 200	CEILING	1/3"	23'	26'	VARIFOCAL 3 – 9MM	AXIS MODEL P3346–V	N/A	N/A
STAIRCASE 2	T137	FIXED	ROOM 200	CEILING	1/3"	12'	8'	VARIFOCAL 3 – 9MM	AXIS MODEL P3346–V	N/A	N/A
ROOM 209	T138	FIXED	ROOM 200	CEILING	1/3"	19'	18'	VARIFOCAL 3 – 9MM	AXIS MODEL P3346–V	N/A	N/A
ROOM 209A	T139	FIXED	ROOM 200	CEILING	1/3"	7'	11'	VARIFOCAL 3 – 9MM	AXIS MODEL P3346–V	N/A	N/A
ROOM 209A	T140	FIXED	ROOM 200	CEILING	1/3"	7'	11'	VARIFOCAL 3 – 9MM	AXIS MODEL P3346–V	N/A	N/A
ROOM 209	T141	FIXED	ROOM 200	CEILING	1/3"	18'	18'	VARIFOCAL 3 – 9MM	AXIS MODEL P3346–V	N/A	N/A
ROOM 210B	T142	FIXED	ROOM 200	CEILING	1/3"	7'	11'	VARIFOCAL 3 – 9MM	AXIS MODEL P3346–V	N/A	N/A
ROOM 210B	T143	FIXED	ROOM 200	CEILING	1/3"	7'	11'	VARIFOCAL 3 – 9MM	AXIS MODEL P3346–V	N/A	N/A
ROOM 210	T144	FIXED	ROOM 200	CEILING	1/3"	18'	18'	VARIFOCAL 3 – 9MM	AXIS MODEL P3346–V	N/A	N/A
ROOM 210	T145	FIXED	ROOM 200	CEILING	1/3"	25'	44'	VARIFOCAL 3 – 9MM	AXIS MODEL P3346–V	N/A	N/A
ROOM 211	T146	FIXED	ROOM 200	WALL	1/3"	29'	26'	VARIFOCAL 3 – 9MM	AXIS MODEL P3346–V	N/A	N/A
STREET N.E.	T147	FIXED	ROOM 200	WALL	1/3"	61'	87'	VARIFOCAL 3 – 9MM	AXIS MODEL P3346–V	N/A	N/A
STAIRCASE 5	T148	FIXED	ROOM 200	CEILING	1/3"	17'	16'	VARIFOCAL 3 – 9MM	AXIS MODEL P3346–V	N/A	N/A
ROOM 218A	T149	FIXED	ROOM 200	CEILING	1/3"	17'	19'	VARIFOCAL 3 – 9MM	AXIS MODEL P3346–V	N/A	N/A
ROOM 218	T150	FIXED	ROOM 200	CEILING	1/3"	18'	17'	VARIFOCAL 3 – 9MM	AXIS MODEL P3346–V	N/A	N/A
ROOM 218	T151	FIXED	ROOM 200	CEILING	1/3"	29'	38'	VARIFOCAL 3 – 9MM	AXIS MODEL P3346–V	N/A	N/A
ROOM 218	T152	FIXED	ROOM 200	CEILING	1/3"	26'	40'	VARIFOCAL 3 – 9MM	AXIS MODEL P3346–V	N/A	N/A
ROOM 204	T153	FIXED	ROOM 200	CEILING	1/3"	30'	28'	VARIFOCAL 3 – 9MM	AXIS MODEL P3346–V	N/A	N/A
STAIRCASE 7	T154	FIXED	ROOM 200	CEILING	1/3"	25'	32'	VARIFOCAL 3 – 9MM	AXIS MODEL P3346–V	N/A	N/A
STAIRCASE 7	T155	FIXED	ROOM 200	CEILING	1/3"	6'	9'	VARIFOCAL 3 – 9MM	AXIS MODEL P3346–V	N/A	N/A
ROOM 216	T156	FIXED	ROOM 200	CEILING	1/3"	22'	20'	VARIFOCAL 3 – 9MM	AXIS MODEL P3346–V	N/A	N/A
ROOM 216A	T157	FIXED	ROOM 200	CEILING	1/3"	19'	19'	VARIFOCAL 3 – 9MM	AXIS MODEL P3346–V	N/A	N/A
ROOM 216	T158	FIXED	ROOM 200	CEILING	1/3"	33'	36'	VARIFOCAL 3 – 9MM	AXIS MODEL P3346–V	N/A	N/A
ROOM 218	T159	FIXED	ROOM 200	CEILING	1/3"	9'	13'	VARIFOCAL 3 – 9MM	AXIS MODEL P3346–V	N/A	N/A
STAIRCASE 7	T160	FIXED	ROOM 200	CEILING	1/3"	9'	12'	VARIFOCAL 3 – 9MM	AXIS MODEL P3346–V	N/A	N/A
ROOM 216	T161	FIXED	ROOM 200	CEILING	1/3"	25'	34'	VARIFOCAL 3 – 9MM	AXIS MODEL P3346–V	N/A	N/A
ROOM 216A	T162	FIXED	ROOM 200	CEILING	1/3"	8'	9'	VARIFOCAL 3 – 9MM	AXIS MODEL P3346–V	N/A	N/A
ROOM 216	T163	FIXED	ROOM 200	CEILING	1/3"	8'	11'	VARIFOCAL 3 – 9MM	AXIS MODEL P3346–V	N/A	N/A
ROOM 217	T164	FIXED	ROOM 200	CEILING	1/3"	47'	34'	VARIFOCAL 3 – 9MM	AXIS MODEL P3346–V	N/A	N/A
ROOM 217	T165	FIXED	ROOM 200	CEILING	1/3"	45'	29'	VARIFOCAL 3 – 9MM	AXIS MODEL P3346–V	N/A	N/A
STAIRCASE 6	T166	FIXED	ROOM 200	CEILING	1/3"	9'	5'	VARIFOCAL 3 – 9MM	AXIS MODEL P3346–V	N/A	N/A
ROOM 215	T167	FIXED	ROOM 200	CEILING	1/3"	14'	20'	VARIFOCAL 3 – 9MM	AXIS MODEL P3346–V	N/A	N/A
ROOM 215	T168	FIXED	ROOM 200	CEILING	1/3"	12'	16'	VARIFOCAL 3 – 9MM	AXIS MODEL P3346–V	N/A	N/A
ROOM 214	T169	FIXED	ROOM 200	CEILING	1/3"	15'	14'	VARIFOCAL 3 – 9MM	AXIS MODEL P3346–V	N/A	N/A
ROOM 214	T170	FIXED	ROOM 200	CEILING	1/3"	15'	15'	VARIFOCAL 3 – 9MM	AXIS MODEL P3346–V	N/A	N/A
ROOM 213	T171	FIXED	ROOM 200	CEILING	1/3"	15'	16'	VARIFOCAL 3 – 9MM	AXIS MODEL P3346–V	N/A	N/A
ROOM 213	T172	FIXED	ROOM 200	CEILING	1/3"	14'	15'	VARIFOCAL 3 – 9MM	AXIS MODEL P3346–V	N/A	N/A
STAIRCASE 4	T173	FIXED	ROOM 200	CEILING	1/3"	16'	11'	VARIFOCAL 3 – 9MM	AXIS MODEL P3346–V	N/A	N/A
STREET N.	T175	FIXED	ROOM 200	WALL	1/3"	44'	53'	VARIFOCAL 3 – 9MM	AXIS MODEL P3346–V	N/A	N/A
WEST EXTERIOR	T177	FIXED	ROOM 200	WALL	1/3"	44'	53'	VARIFOCAL 3 – 9MM	AXIS MODEL P3346–V	N/A	N/A
SOUTHWEST EXTERIOR	T178	FIXED	ROOM 200	WALL	1/3"	44'	53'	VARIFOCAL 3 – 9MM	AXIS MODEL P3346–V	N/A	N/A
SOUTHWEST EXTERIOR	T179	FIXED	ROOM 200	WALL	1/3"	44'	53'	VARIFOCAL 3 – 9MM	AXIS MODEL P3346–V	N/A	N/A
EAST EXTERIOR	T181	FIXED	ROOM 200	WALL	1/3"	44'	53'	VARIFOCAL 3 – 9MM	AXIS MODEL P3346–V	N/A	N/A
ROOM 129	T184	FIXED	ROOM 200	WALL	1/3"	44'	53'	VARIFOCAL 3 – 9MM	AXIS MODEL P3346–V	N/A	N/A

2

1 TRAINING CAMERA SCHEDULE
1/8" = 1'–0"

NYS OFFICE OF GENERAL SERVICES
Serving New York
ANDREW M. CUOMO
Governor
ROANN M. DESTITO
COMMISSIONER
JAMES M. DAVIES, A.I.A.
Deputy Commissioner, Design and Construction

CONSULTANT
C&S COMPANIES®
C&S Engineers, Inc.
499 Col. Eileen Collins Blvd.
Syracuse, New York 13212
Phone: 315-455-2000
Fax: 315-455-9667
www.cscos.com

WARNING:
THE ALTERATION OF THIS MATERIAL IN ANY WAY, UNLESS DONE UNDER THE DIRECTION OF A COMPARABLE PROFESSIONAL, I.E. ARCHITECT FOR AN ARCHITECT, ENGINEER FOR AN ENGINEER OR LANDSCAPE ARCHITECT FOR A LANDSCAPE ARCHITECT, IS A VIOLATION OF THE NEW YORK STATE EDUCATION LAW AND/OR REGULATIONS AND IS A CLASS 'A' MISDEMEANOR.

STATE OF NEW YORK · DOUGLAS J. OBRIST · 078022 · LICENSED PROFESSIONAL ENGINEER

CONTRACT:

TITLE:
PROVIDE CITYSCAPE COMPLEX

LOCATION:
STATE PREPAREDNESS TRAINING CENTER
5900 AIRPORT ROAD
ORISKANY, NY 13424

CLIENT:
DIVISION OF HOMELAND SECURITY & EMERGENCY SERVICES

REVISED DRAWING
9/5/2012

MARK	DATE	DESCRIPTION
2	09/05/2012	ADDENDUM NO 6
	07/05/2012	FINAL SUBMISSION
	06/11/2012	100% SUBMISSION

PROJECT NUMBER: 44014–E
DESIGNED BY: JMW
DRAWN BY: JMW
FIELD CHECK: XXXXX
APPROVED: XXXXX

SHEET TITLE: ELECTRICAL
TRAINING CAMERA SCHEDULE

DRAWING NUMBER:
EY–601

SHEET OF

Sep 05,2012 – 2:33pm
F:\Project\190 – NYSOGS\190429034–cityscape\Design\CADD\Sheet Files\Security\A02_601.dwg
36x24 PLOT SHEET

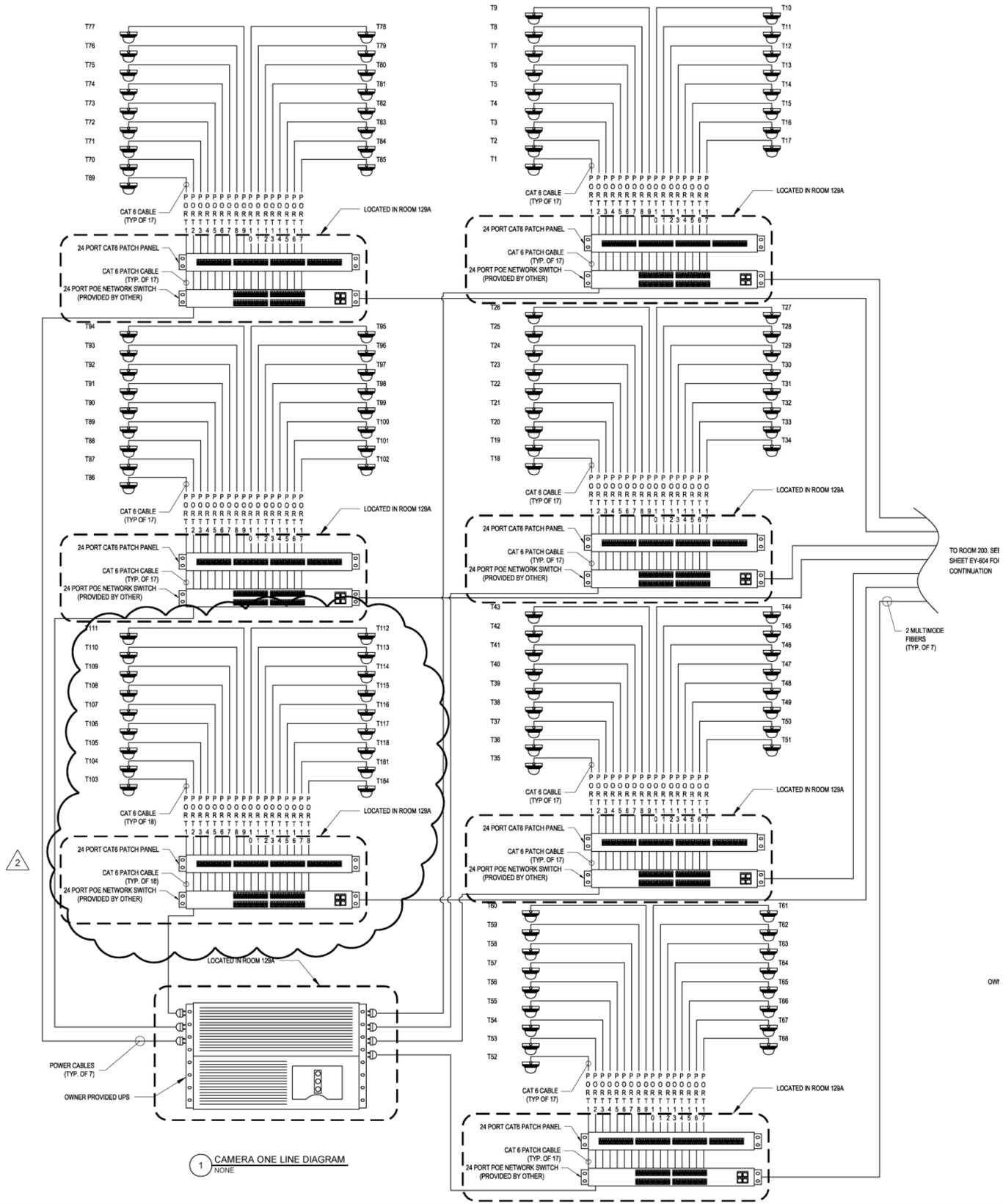

1 CAMERA ONE LINE DIAGRAM
NONE

GENERAL NOTES:

1. ALL EQUIPMENT SHOWN ON THIS DRAWING IS TO BE PROVIDED UNDER THIS CONTRACT UNLESS NOTED, PROVIDED BY OTHERS.
2. PROVIDE THE APPROPRIATE GBIC MODULE FOR EVERY FIBER TO SWITCH/PATCH PANEL CONNECTION.
3. ALL EQUIPMENT TO BE INSTALLED IN NETWORK DATA RACKS SPECIFIED IN DRAWING T-502 AND DIVISION 27 SPECIFICATIONS.

Sep 05,2012 - 2:33pm
F:\Project\190 - NYSOGS\190429034-cityscape\Design\CADD\Sheet Files\Security\A02_603- 604.dwg
36x24 PLOT SHEET

NYS OFFICE OF GENERAL SERVICES
Serving New York
ANDREW M. CUOMO
Governor
ROANN M. DESTITO
COMMISSIONER
JAMES M. DAVIES, A.I.A.
Deputy Commissioner, Design and Construction

CONSULTANT

C&S COMPANIES

C&S Engineers, Inc.
499 Col. Eileen Collins Blvd.
Syracuse, New York 13212
Phone: 315-455-2000
Fax: 315-455-9667
www.cscos.com

WARNING:
THE ALTERATION OF THIS MATERIAL IN ANY WAY, UNLESS DONE UNDER THE DIRECTION OF A COMPARABLE PROFESSIONAL, I.E. ARCHITECT FOR AN ARCHITECT, ENGINEER FOR AN ENGINEER OR LANDSCAPE ARCHITECT FOR A LANDSCAPE ARCHITECT, IS A VIOLATION OF THE NEW YORK STATE EDUCATION LAW AND/OR REGULATIONS AND IS A CLASS 'A' MISDEMEANOR.

STATE OF NEW YORK · DOUGLAS J. DRPIST · 078027 · LICENSED PROFESSIONAL ENGINEER

CONTRACT:

TITLE:
PROVIDE CITYSCAPE COMPLEX

LOCATION:
STATE PREPAREDNESS TRAINING CENTER
5900 AIRPORT ROAD
ORISKANY, NY 13424

CLIENT:
DIVISION OF HOMELAND SECURITY & EMERGENCY SERVICES

REVISED DRAWING
9/5/2012

MARK	DATE	DESCRIPTION
2	09/05/2012	ADDENDUM NO 6
	07/05/2012	FINAL SUBMISSION
	06/11/2012	100% SUBMISSION

PROJECT NUMBER: **44014 – E**

DESIGNED BY: JMW
DRAWN BY: JMW
FIELD CHECK: TLH
APPROVED: TLH

SHEET TITLE: ELECTRICAL
FIRST FLOOR
TRAINING CAMERA
ONE-LINE DIAGRAM

DRAWING NUMBER:
EY-603

SHEET OF

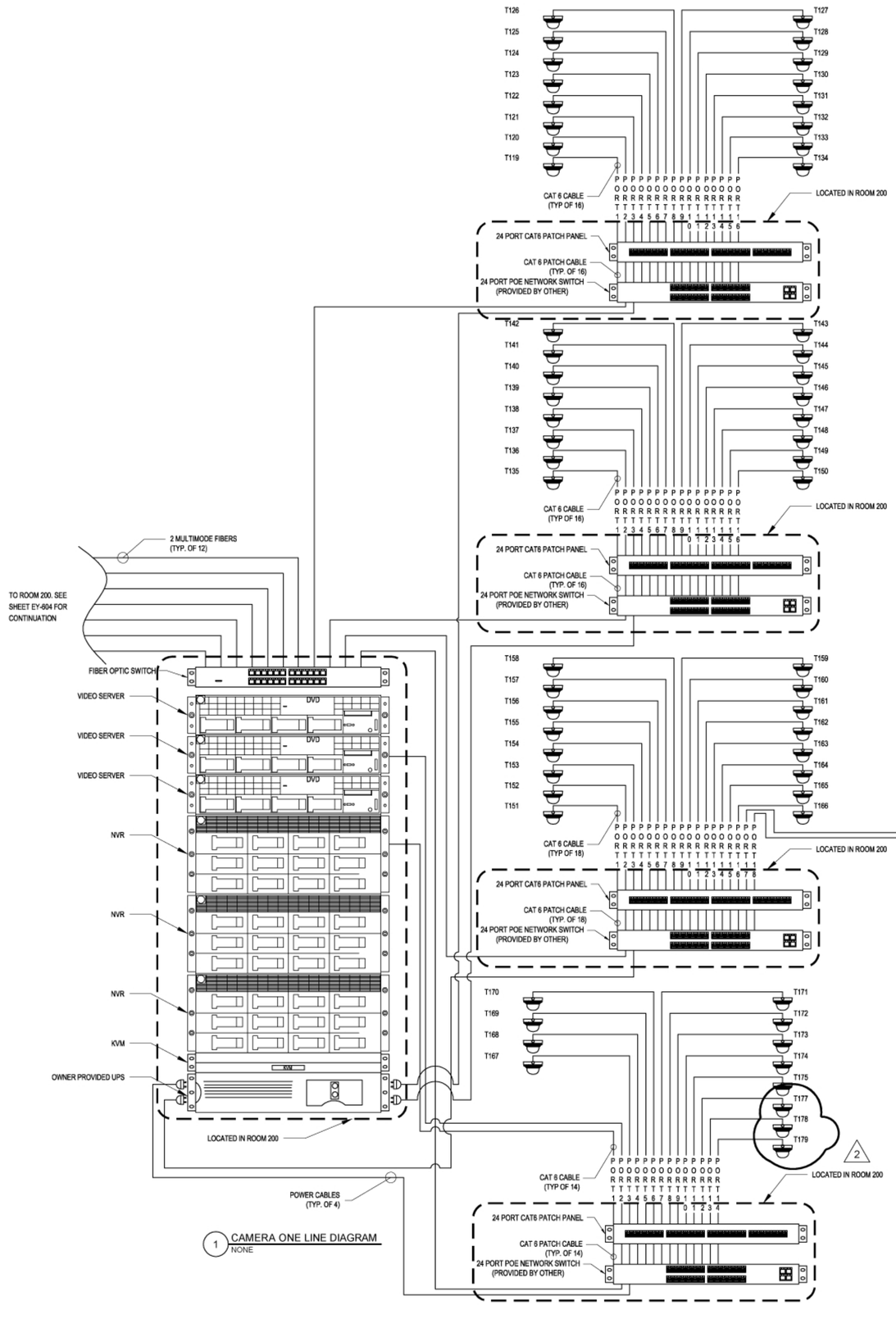

1 CAMERA ONE LINE DIAGRAM
NONE

GENERAL NOTES:

1. ALL EQUIPMENT SHOWN ON THIS DRAWING IS TO BE PROVIDED UNDER THIS CONTRACT UNLESS NOTED, PROVIDED BY OTHERS.
2. PROVIDE THE APPROPRIATE GBIC MODULE FOR EVERY FIBER TO SWITCH/PATCH PANEL CONNECTION.
3. ALL EQUIPMENT TO BE INSTALLED IN NETWORK DATA RACKS SPECIFIED IN DRAWING T-502 AND DIVISION 27 SPECIFICATIONS.

NYS OFFICE OF GENERAL SERVICES
Serving New York

ANDREW M. CUOMO
Governor
ROANN M. DESTITO
COMMISSIONER
JAMES M. DAVIES, A.I.A.
Deputy Commissioner, Design and Construction

CONSULTANT

C&S COMPANIES

C&S Engineers, Inc.
499 Col. Eileen Collins Blvd.
Syracuse, New York 13212
Phone: 315-455-2000
Fax: 315-455-9667
www.cscos.com

WARNING:
THE ALTERATION OF THIS MATERIAL IN ANY WAY, UNLESS DONE UNDER THE DIRECTION OF A COMPARABLE PROFESSIONAL, I.E. ARCHITECT FOR AN ARCHITECT, ENGINEER FOR AN ENGINEER OR LANDSCAPE ARCHITECT FOR A LANDSCAPE ARCHITECT, IS A VIOLATION OF THE NEW YORK STATE EDUCATION LAW AND/OR REGULATIONS AND IS A CLASS 'A' MISDEMEANOR.

STATE OF NEW YORK · DOUGLAS J. DRPIST · 078023 · LICENSED PROFESSIONAL ENGINEER

CONTRACT:

TITLE: PROVIDE CITYSCAPE COMPLEX

LOCATION: STATE PREPAREDNESS TRAINING CENTER
5900 AIRPORT ROAD
ORISKANY, NY 13424

CLIENT: DIVISION OF HOMELAND SECURITY & EMERGENCY SERVICES

REVISED DRAWING
9/5/2012

MARK	DATE	DESCRIPTION
2	09/05/2012	ADDENDUM NO 6
	07/05/2012	FINAL SUBMISSION
	06/11/2012	100% SUBMISSION

PROJECT NUMBER:	44014 – E
DESIGNED BY:	JMW
DRAWN BY:	JMW
FIELD CHECK:	TLH
APPROVED:	TLH

SHEET TITLE: ELECTRICAL
SECOND FLOOR
TRAINING CAMERA
ONE-LINE DIAGRAM

DRAWING NUMBER: EY-604

SHEET OF

Sep 05,2012 – 2:34pm
F:\Project\190 – NYSOGS\190428034-cityscape\Design\CADD\Sheet Files\Security\A02_603- 604.dwg
36x24 PLOT SHEET

SPRINKLER HEAD SCHEDULE

SPRINKLER TYPE	SYMBOL	TEMPERATURE RATING (F.)	NOMINAL ORIFICE SIZE	K	FINISH	ESCUTCHEON OR GUARD	MANUFACTURER & MODEL
PENDENT	●	135	1/2" NPT	5.6	CHROME PLATED	FULLY RECESSED CHROME	TYCO TFP 296 RECESSED
PENDENT INSTITUTIONAL		165	1/2" NPT	5.6	CHROME PLATED	FULLY RECESSED CHROME	TYCO RAVEN EC PENDENT (TY3282)
UPRIGHT INSTITUTIONAL		165	1/2" NPT	5.6	BRASS	G2 SPRINKLER GUARD	TYCO TY-FRL UPRIGHT (TY3121)
UPRIGHT QR	○	165	3/4" NPT	8	BRASS	G1/G4 SPRINKLER GUARD	TYCO TY FRB UPRIGHT
SIDEWALL INSTITUTIONAL	▷	165	1/2" NPT	5.6	CHROME PLATED	SEMI-RECESSED CHROME	TYCO TFP PH5 RECESSED HSW

1

ABBREVIATIONS

ABV	ABOVE	JP	JOCKEY PUMP
AC	AIR COMPRESSOR	-	-
AD	AREA DRAIN	MC	MECHANICAL CONTRACTOR
AFF	ABOVE FINISHED FLOOR	MH	MANHOLE
AFG	ABOVE FINISHED GRADE	MTD	MOUNTED
AP	ACCESS PANEL	MTR	MOTOR
-	-	-	-
BFC	BELOW FINISHED CEILING	NC	NORMALLY CLOSED
BFP	BACK FLOW PREVENTOR	NIC	NOT IN CONTRACT
BOP	BOTTOM OF PIPE	NO	NORMALLY OPEN
BP	BOOSTER PUMP	-	-
		OGH	OUTSIDE GROUND HYDRANT
CB	CATCH BASIN	OSY	OUTSIDE SCREW AND YOKE
CLG	CEILING	OWH	OUTSIDE WALL HYDRANT
-	-	-	-
CC	CONSTRUCTION CONTRACTOR	PC	PLUMBING CONTRACTOR
CW	COLD WATER	PIV	POST INDICATOR VALVE
DAS	DRY AUTOMATIC SPRINKLER	PRV	PRESSURE REDUCING VALVE
DCVA	DOUBLE CHECK VALVE ASSEMBLY	-	-
DSP	DRY STANDPIPE	RCP	REFLECTED CEILING PLAN
DST	DIESEL STORAGE TANK	RV	PRESSURE RELEIF VALVE
DW	DOMESTIC WATER	-	-
-	-	S	SOIL
EC	ELECTRICAL CONTRACTOR	SAN	SANITARY
-	-	SI	SAND INTERCEPTOR
FC	FLEXIBLE CONNECTOR	SP	SUMP PUMP
FCV	FLOOR CONTROL VALVE	SPR	SPRINKLER
FD	FLOOR DRAIN	SPKS	SPRINKLERS
FDC	FIRE DEPARTMENT CONNECTION	-	-
FE	FIRE EXTINGUISHER	TOP	TOP OF PIPE
FDV	FIRE DEPARTMENT VALVE	TS	TAMPER SWITCH
FHC	FIRE HOSE CABINET	TYP	TYPICAL
FHV	FIRE HOSE VALVE	UG	UNDERGROUND
FP	FIRE PUMP	-	-
FL	FLOOR	W	WASTE
FS	FLOW SWITCH	WAS	WET AUTOMATIC SPRINKLER
FU	FIXTURE UNITS	WCO	WALL CLEAN OUT
-	-	WH	WATER HEATER
GND	GROUND		
-	-		
HB	HOSE BIBB		
HP	HORSE POWER		
HZ	HERTZ (FREQUENCY IN CYLCES PER SECOND)		
-	-		
INV	INVERT ELEVATION		
ITC	INSPECTORS TEST CONNECTION		

FIRE PROTECTION SYMBOLS

SYMBOL	DESCRIPTION
— F —	FIRE MAIN
— SP —	SPRINKLER MAIN
— WAS —	WET AUTOMATIC SPRINKLER
— DAS —	DRY AUTOMATIC SPRINKLER
TS	OUTSIDE SCREW AND YOKE VALVE/TAMPER SWITCH
FS	FLOW SWITCH
	ALARM CHECK VALVE ASSEMBLY
	DRY PIPE VALVE ASSEMBLY
	HOSE BIBB
	FIRE HYDRANT
	FIRE HOSE VALVE
	ALARM GONG
P.I.V.	POST INDICATOR VALVE
FDV	FIRE DEPARTMENT VALVE
	PENDENT INSTITUTIONAL SPRINKLER HEAD
	UPRIGHT INSTITUTIONAL SPRINKLER HEAD
▷ 1	SIDEWALL INSTITUTIONAL SPRINKLER HEAD
○	UPRIGHT QR INSTITUTIONAL SPRINKLER HEAD

SPRINKLER SYSTEM NOTES

1. SCOPE OF WORK
   - A. PROVIDE ALL WORK, MATERIALS, AND LABOR REQUIRED TO SATISFY A COMPLETE WORKING SYSTEM WHETHER SPECIFIED OR IMPLIED.
   - B. THE WORK IS TO BE PERFORMED IN STRICT COMPLIANCE WITH NFPA 13 (LATEST EDITION), ALL CODES AND OTHER NFPA REGULATIONS GOVERNING WORK OF THIS NATURE.
   - C. EXAMINE THE PROPOSED SITE AND SHALL DETERMINE FOR HIMSELF THE CONDITIONS THAT MAY EFFECT THE WORK. NO ALLOWANCE SHALL BE MADE IF THE CONTRACTOR FAILS TO MAKE SUCH EXAMINATIONS.
2. PERMITS AND APPROVALS
   - A. THE CONTRACTOR SHALL SECURE ALL PERMITS AND APPROVAL FROM AUTHORITIES HAVING JURISDICTION PRIOR TO THE START SPRINKLER OR FIRE PROTECTION PIPING INSTALLATIONS.
3. SHOP DRAWINGS
   - A. SEE SPECIFICATION SECTIONS 013300 AND 211313.
4. SPRINKLER PIPING
   - A. SEE SPECIFICATION SECTION 221100.
5. PIPE SUPPORTS
   - A. ALL HANGERS MUST BE AN APPROVED TYPE BY NFPA 13. NO SPRINKLER PIPING IS TO BE SUPPORTED FROM ANY MECHANICAL OR ELECTRICAL DEVICES.
   - B. SUPPORT ALL PIPE FROM THE BUILDING STRUCTURE IN A NEAT AND WORKMANLIKE MANNER. VERTICAL RISERS SHALL BE SUPPORTED AT EACH FLOOR LEVEL WITH STEEL PIPE CLAMPS. THE USE OF WIRE OR STRAP METAL HANGER TO SUPPORT PIPES WILL NOT BE PERMITTED. HANGING PIPES FROM OTHER PIPES WILL NOT BE PERMITTED. PIPING SHALL BE CAREFULLY COORDINATED BEFORE INSTALLATION WITH OTHER SYSTEMS AND EQUIPMENT IN CHASES AND OTHER CONGESTED AREAS.
   - C. REFER TO SPECIFICATION SECTION 220529 FOR MAXIMUM DISTANCE BETWEEN PIPE SUPPORTS.
6. HYDRAULIC CALCULATIONS
   - A. HYDRAULIC CALCULATIONS SHALL BE PERFORMED PER NFPA 13, LATEST EDITION, SECTION 22.3 FOR ALL SYSTEMS BEING INSTALLED. HYDRAULIC CALCULATIONS SHALL BE PREPARED BY THE SPRINKLER INSTALLER AND REVIEWED AND APPROVED BY THE ENGINEER IN CHARGE PRIOR TO THE START OF ANY WORK.
7. WORKING PLANS
   - A. THE DRAWINGS INCLUDED AS PART OF THIS SET OF CONSTRUCTION DOCUMENTS ARE DEFINED AS PRELIMINARY SPRINKLER PLANS AS SPECIFIED IN CHAPTER 22 OF NFPA 13. FINAL WORKING DRAWINGS SHALL BE PREPARED BY THE SPRINKLER CONTRACTOR AND REVIEWED AND APPROVED BY THE ENGINEER IN CHARGE PRIOR TO THE START OF ANY WORK.
8. TESTS
   - A. ACCEPTANCE AND HYDROSTATIC TESTS TO BE PERFORMED IN ACCORDANCE WITH CHAPTER 10 OF NFPA 13.
9. MISCELLANEOUS
   - A. DO NOT SCALE THIS DRAWING FOR EXACT DIMENSIONS. VERIFY ALL FIGURES, CONDITIONS, AND DIMENSIONS AT THE JOB SITE.
   - B. THE SPRINKLER PLANS ARE INTENDED TO BE DIAGRAMMATIC. THEY ARE NOT INTENDED TO SHOW EVERY ITEM IN ITS EXACT LOCATION.
10. DESIGN REQUIREMENTS
   - 1 A. ALL SPRINKLER SYSTEMS SHALL BE DESIGNED AS A DOUBLE INTERLOCK DRY PIPE PREACTION.

LEGEND

1. 8" UNDERGROUND LEAD IN
2. 8" x 8" FLANGED FITTING
3. 300# WATER GAGE ASSEMBLY
4. 8" FLANGED 90 DEG. ELL
5. 8" UL-FM FLG'D OS&Y w/ TAMPER SWITCH
6. 8" DOUBLE CHECK VALVE ASSEMBLY w/ TEST VALVES
7. VICTAULIC SERIES 756 DRY PIPE VALVE COMPLETE w/ TRIM, GAGES, & DRAIN, & Q.O.D.
8. 4" "CENTRAL" MODEL # 90 G x G SWING CHECK VALVE
9. 2 1/2 x 2 1/2 x 4 SIAMESE FDC w/ NST CORDINATE TYPE AND LOCATION W/FIRE DEPT.
10. 1/2" AUTOMATIC BALL DRIP & ST. ELL
11. EPS 10-1 TYPE WATER FLOW SWITCH
12. EPS 10-1 WATER PRESSURE SWITCH
13. OUTSIDE ELECTRIC BELL
14. WATER MOTOR ALARM
15. PIPE STAND
16. GxG CHK. VA. CENTRAL MOD. 90
17. FLANGED TEE
18. GxG CHK. VA. VICTAULIC SERIES 717
19. ACELLERATOR

1

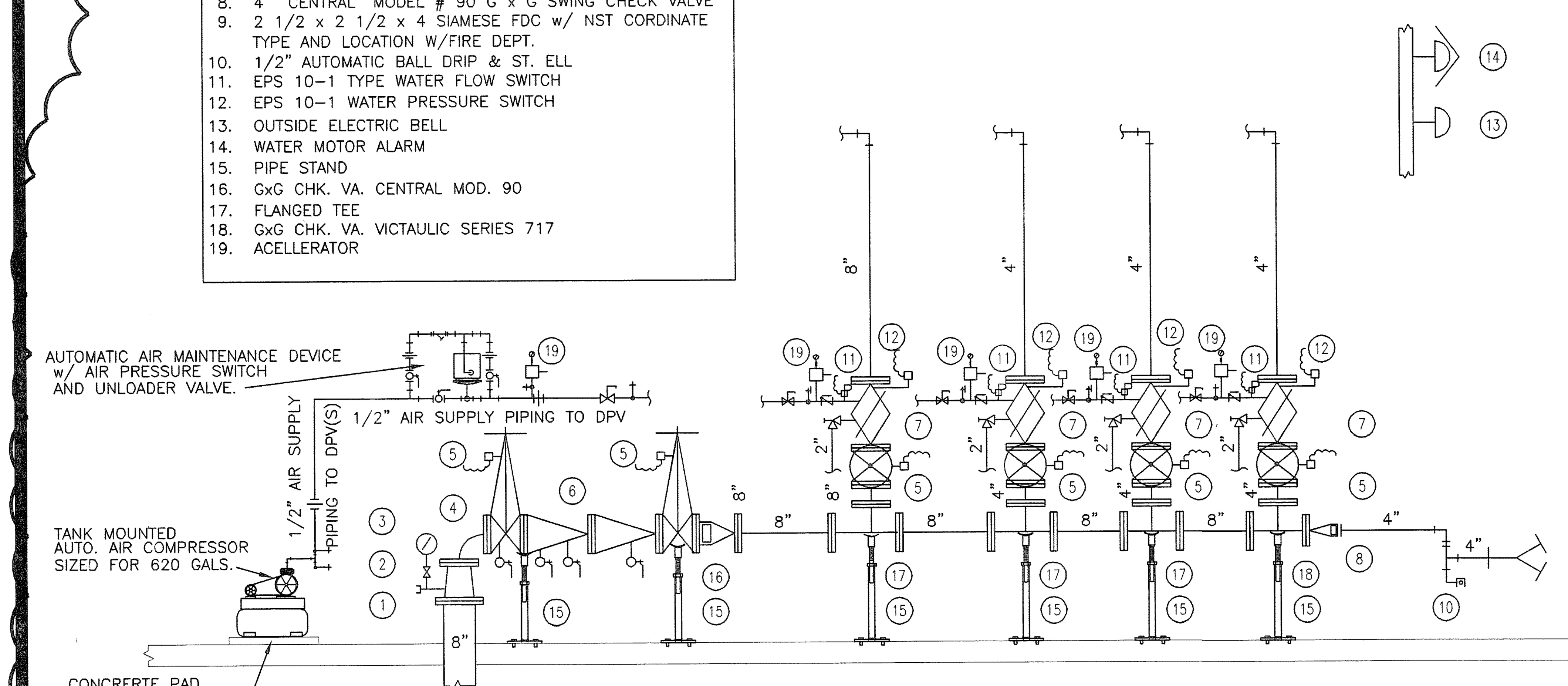

SPRINKLER SYSTEM RISER DIAGRAM
- WET PIPE AND THREE DRY VALVES DOUBLE INTERLOCK PREACTION VALVES W/ACCELRATORS
NOT TO SCALE

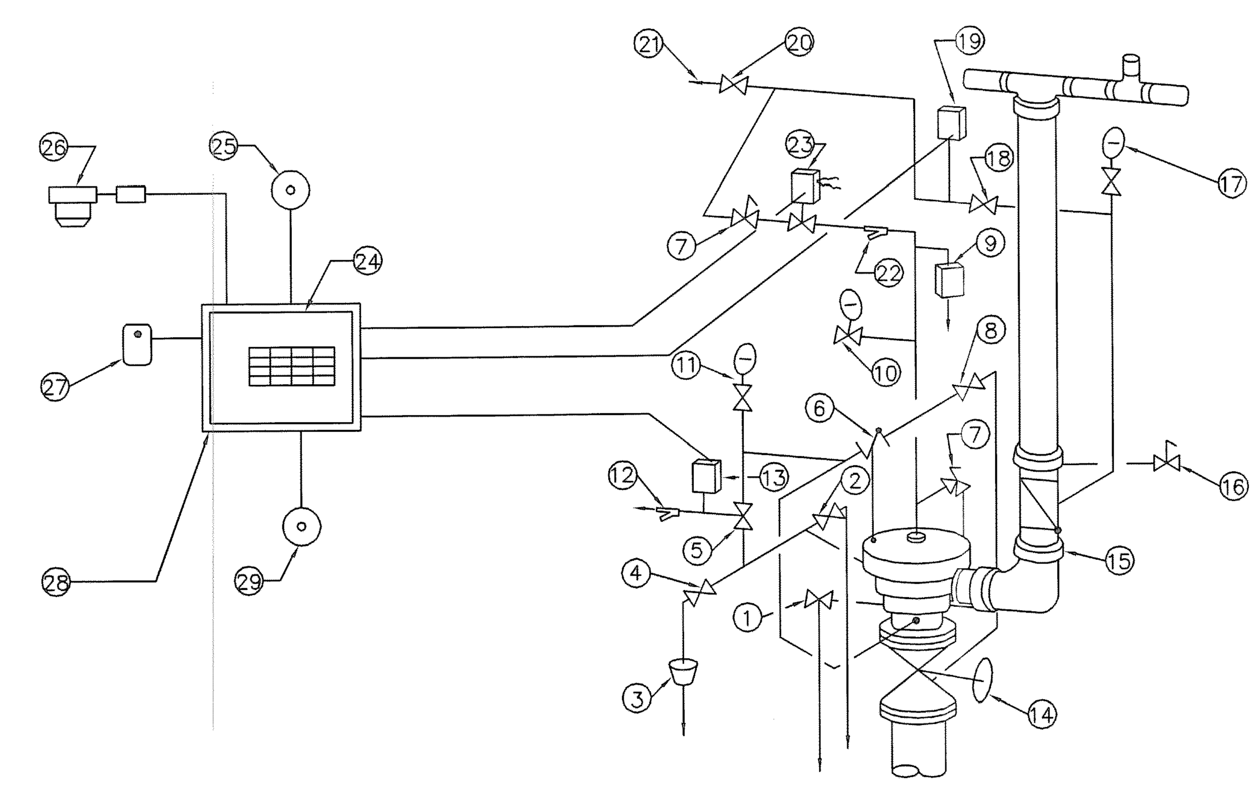

SYSTEM COMPONENT SCHEDULE

1. TEST DRAIN VALVE
2. AUXILIARY DRAIN VALVE
3. DRAIN CUP
4. DRIP CHECK
5. ALARM TEST SHUT-OFF VALVE
6. STRAINER ORIFICE CHECK VALVE
7. PRESSURE OPERATED RELIEF VALVE
8. PRIMIING VALVE
9. PNEUMATIC OPERATOR EMERGENCY RELEASE
10. PRIMING PRESSURE GAUGE & VALVE
11. WATER SUPPLY PRESSURE GAUGE & VALVE
12. WATER MOTOR ALARM (STRAINER IS REQ'D)
13. ALARM PRESSURE SWITCH
14. WATER SUPPLY CONTROL VALVE W/TAMPER SWITCH
15. RUBBER SEAT CHECK VALVE
16. SYSTEM MAIN DRAIN VALVE
17. SYSTEM PRESSURE GAUGE & VALVE
18. SOFT SEAT CHECK VALVE
19. AIR SUPERVISORY PRESSURE SWITCH
20. AIR SUPPLY CONTROL VALVE
21. DRY SYSTEM AIR SUPPLY
22. STRAINER
23. SOLENOID VALVE
24. CONTROL PANEL
25. ALARM BELL N.I.C.
26. CROSS ZONE (SMOKE & HEAT DETECTORS)
27. MANUAL EMERGENCY STATION N.I.C.
28. MASTER BOX IN CONTROL ROOM
29. TROUBLE BELL N.I.C.

DOUBLE INTERLOCKED PREACTION SPRINKLER SYSTEM
NOT TO SCALE

NOTE: SUPERVISED DOUBLE INTERLOCKED PREACTION ELECTRIC/PNEU-LECTRIC. SYSTEMS (3 TOTAL) SHALL BE SUPERVISED BY ELECTRIC RELEASE SYSTEMS OPERATED FROM THE CONTROL ROOM AND PNEUMATIC SUPERVISORY PRESSURE MONITORED ELECTRICALLY.

SYSTEM SEQUENCE OF OPERATION

1. WHEN DETECTION SYSTEM (26) OPERATES, THE CONTROL ROOM OPERATOR SHALL DURING NORMAL OPERATION VERIFY CAUSE OF ALARM AND ACTIVATED THE SYSTEM FROM THE CONTROL PANEL (24) LOCATED IN THE CONTROL ROOM ENERGIZING THE SOLENOID VALVE (23) OPEN.
2. DURING UNOCCUPIED MODE THE SYSTEM SHALL ENERGIZING THE SOLENOID VALVE (23) OPEN.
2. ALARMS SHALL ACTIVATE BUT DELUGE VALVE WILL NOT OPEN UNTIL A SPRINKLER OPENS, RELIEVING SUPERVISORY PRESSURE FROM SPRINKLER SYSTEM.
4. WHEN SPRINKLER OPENS, SUPERVISORY PRESSURE IN THE SPRINKLER PIPING IS REDUCED CAUSING THE PNEUMATIC ACTUATOR (9) TO OPEN .
5. AFTER BOTH THE ELECTRIC DETECTION SYSTEM AND SUPERVISORY PRESSURE IN IN THE SPRINKLER SYSTEM HAVE BEEN LOST, PRESSURE IS RELEASED FROM THE PRIMING CHAMBER TO OPEN THE DRAIN CUP (3).
6. ACCELERATOR SHALL BE PROVIDED TO ACCELERATE PRESSURE LOSS FROM THE SPRINKLER ALLOWING QUICKER FILLING OF SYSTEM.
7. SHOULD A SPRINKLER OPENS PRIOR TO OPERATION OF DETECTION SYSTEM (26), OR ANY TIME SUPERVISORY PRESSURE IN THE SYSTEM IS LOST, ALARMS CONNECTED TO THE SUPERVISORY SWITCH (19) WILL SIGNAL A LOW PRESSURE CONDITION TO THE SYSTEM CONTROL PANEL (24) IN THE CONTROL ROOM , BUT THE DELUGE WILL NOT OPEN.

OGS
NYS OFFICE OF GENERAL SERVICES
Serving New York
ANDREW M. CUOMO
Governor
ROANN M. DESTITO
COMMISSIONER
JAMES M. DAVIES, A.I.A.
Deputy Commissioner, Design and Construction

CONSULTANT
LABELLA Associates, P.C.
Engineering Architecture Environmental Planning
300 STATE STREET, SUITE 201
ROCHESTER, NY 14614
P: (585) 454-6110
F: (585) 454-3066
www.labellapc.com

Copyright © 2011

WARNING:
THE ALTERATION OF THIS MATERIAL IN ANY WAY, UNLESS DONE UNDER THE DIRECTION OF A COMPARABLE PROFESSIONAL, I.E. ARCHITECT FOR AN ARCHITECT, ENGINEER FOR AN ENGINEER OR LANDSCAPE ARCHITECT FOR A LANDSCAPE ARCHITECT, IS A VIOLATION OF THE NEW YORK STATE EDUCATION LAW AND/OR REGULATIONS AND IS A CLASS 'A' MISDEMEANOR.

STATE OF NEW YORK · RICHARD W. McGING · LICENSED PROFESSIONAL ENGINEER · 059923

CONTRACT: PLUMBING

TITLE: PROVIDE CITYSCAPE COMPLEX

LOCATION: STATE PREPAREDNESS TRAINING CENTER
5900 AIRPORT ROAD
ORISKANY, NY 13424

CLIENT: DIVISION OF HOMELAND SECURITY & EMERGENCY SERVICES

REVISED DRAWING
09/05/2012

MARK	DATE	DESCRIPTION
1	09/05/2012	ADDENDUM 6
	07/05/2012	FINAL SUBMISSION

PROJECT NUMBER:	44014 - P
DESIGNED BY:	DWM
DRAWN BY:	DWM
FIELD CHECK:	XXXXX
APPROVED:	RWM

SHEET TITLE: FIRE PROTECTION SYMBOLS, LEGENDS ABREVIATIONS

DRAWING NUMBER: FP-000

SHEET X OF X

Y:\NYSOGS\208194.10\Drawings\MEEP\NYSOGS City Scape\Views\MEEP\Fire Prot\F0.0G - General\FP-000 SYMB AND ABB.dwg, 9/5/2012 1:04:15 PM, Xerox2 HDI.pc3
Sep 05,2012 - 1:04pm
Y:\NYSOGS\208194.10\Drawings\MEEP\NYSOGS City Scape\Views\MEEP\Fire Prot\F0.0G - General\FP-000 SYMB AND ABB.dwg
36x24 PLOT SHEET

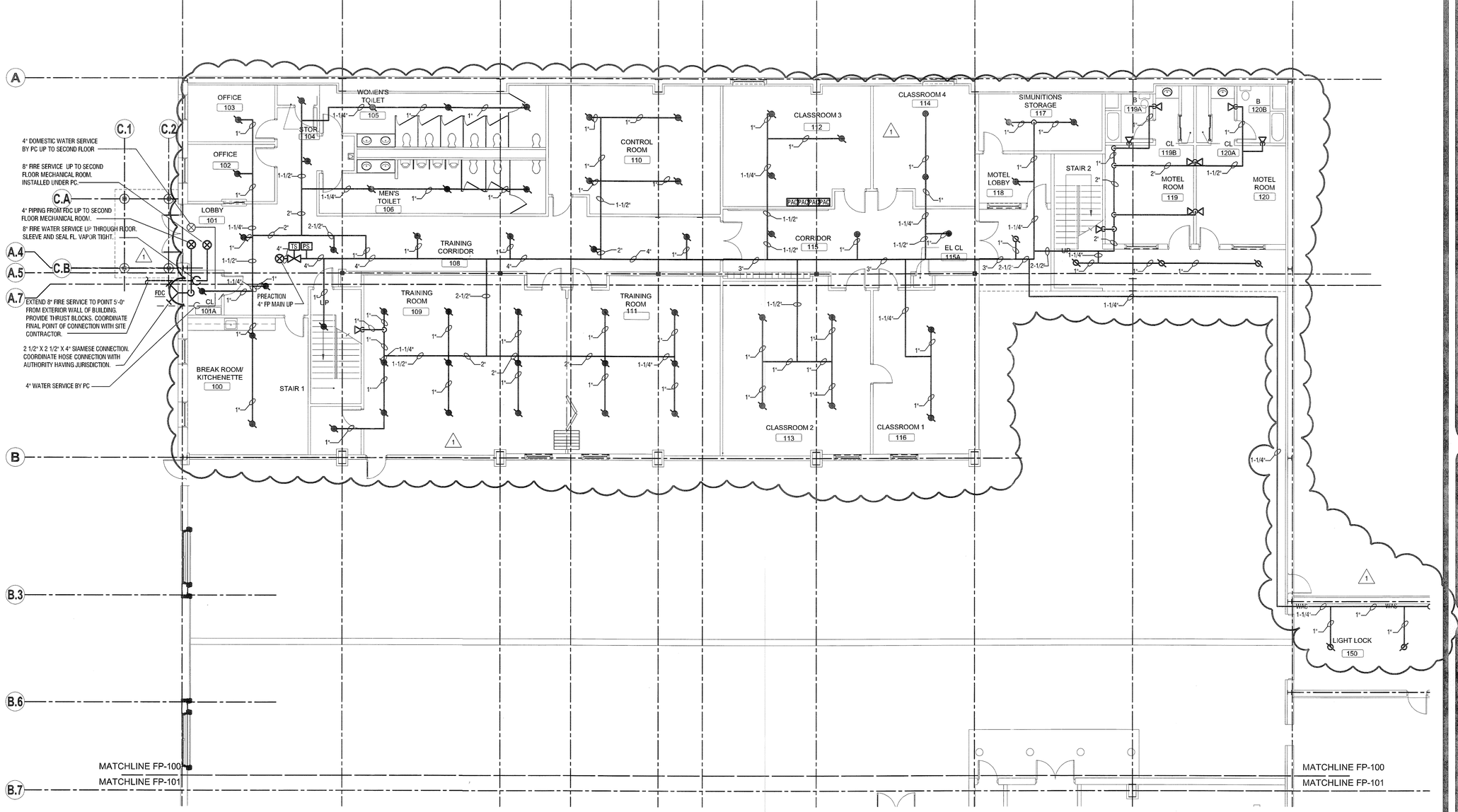

1 / FP-100 FIRST FLOOR FIRE PROTECTION PLAN

SCALE 1/8" = 1'-0"

N

GENERAL NOTES:

A. REFER TO ARCHITECTURAL PLANS FOR CEILING TYPES AND ELEVATIONS.

B. REFER TO ARCHITECTURAL, HVAC AND ELECTRICAL PLANS FOR LIGHTS AND DIFFUSER LOCATIONS AND COORDINATE SPRINKLER LOCATIONS WITH MECHANICAL AND ELECTRICAL CONTRACTORS.

C. COORDINATE THE LOCATIONS OF SPRINKLER HEADS WITH CEILING GRID TO CENTER SPRINKLER HEADS IN CEILING TILES.

D. COORDINATE SPRINKLER MAINS AND BRANCH PIPING TO SPRINKLERS LOCATED ABOVE CEILINGS WITH DUCTWORK, PLUMBING DOMESTIC PIPING, HEATING PIPING, AND ELECTRICAL CONDUIT AND CABLE TRAYS. REFER TO HVAC AND ELECTRICAL AND PLUMBING DRAWINGS FOR ABOVE CEILING EQUIPMENT, DUCTWORK, PIPING, CONDUIT, AND CABLE TRAYS.

ROANN M. DESTITO
COMMISSIONER
JAMES M. DAVIES, A.I.A.
Deputy Commissioner, Design and Construction

CONSULTANT

LABELLA Associates, P.C.
Engineering Architecture Environmental Planning
300 STATE STREET, SUITE 201
ROCHESTER, NY 14614
P: (585) 454-6110
F: (585) 454-3066
www.labellapc.com
Copyright © 2011

WARNING:

THE ALTERATION OF THIS MATERIAL IN ANY WAY, UNLESS DONE UNDER THE DIRECTION OF A COMPARABLE PROFESSIONAL, I.E. ARCHITECT FOR AN ARCHITECT, ENGINEER FOR AN ENGINEER OR LANDSCAPE ARCHITECT FOR A LANDSCAPE ARCHITECT, IS A VIOLATION OF THE NEW YORK STATE EDUCATION LAW AND/OR REGULATIONS AND IS A CLASS "A" MISDEMEANOR.

STATE OF NEW YORK · RICHARD W. ... · 059923 · LICENSED PROFESSIONAL ENGINEER

CONTRACT:
PLUMBING

TITLE:
PROVIDE CITYSCAPE COMPLEX

LOCATION:
STATE PREPAREDNESS TRAINING CENTER
5900 AIRPORT ROAD
ORISKANY, NY 13424

CLIENT:
DIVISION OF HOMELAND SECURITY & EMERGENCY SERVICES

REVISED DRAWING 09/05/2012

MARK	DATE	DESCRIPTION
1	09/05/2012	ADDENDUM 6
	07/05/2012	FINAL SUBMISSION

PROJECT NUMBER:	44014 – P
DESIGNED BY:	DWM
DRAWN BY:	JMB
FIELD CHECK:	XXXXX
APPROVED:	RWM

SHEET TITLE:
NORTH FIRST FLOOR FIRE PROTECTION PLAN

DRAWING NUMBER:
FP–100

SHEET X OF X

Y:\NYSOGS\208194.10\Drawings\MEEP\NYSOGS City Scape\Views\MEEP\Fire Prot\F1.00 - Floor Plans\FP-100 North 1st Floor Fire Protection Plan.dwg, 9/5/2012 1:19:59 PM, Xerox2 HDI.pc3
Sep 05,2012 – 1:20pm
Y:\NYSOGS\208194.10\Drawings\MEEP\NYSOGS City Scape\Views\MEEP\Fire Prot\F1.00 – Floor Plans\FP-100 North 1st Floor Fire Protection Plan.dwg
36x24 PLOT SHEET

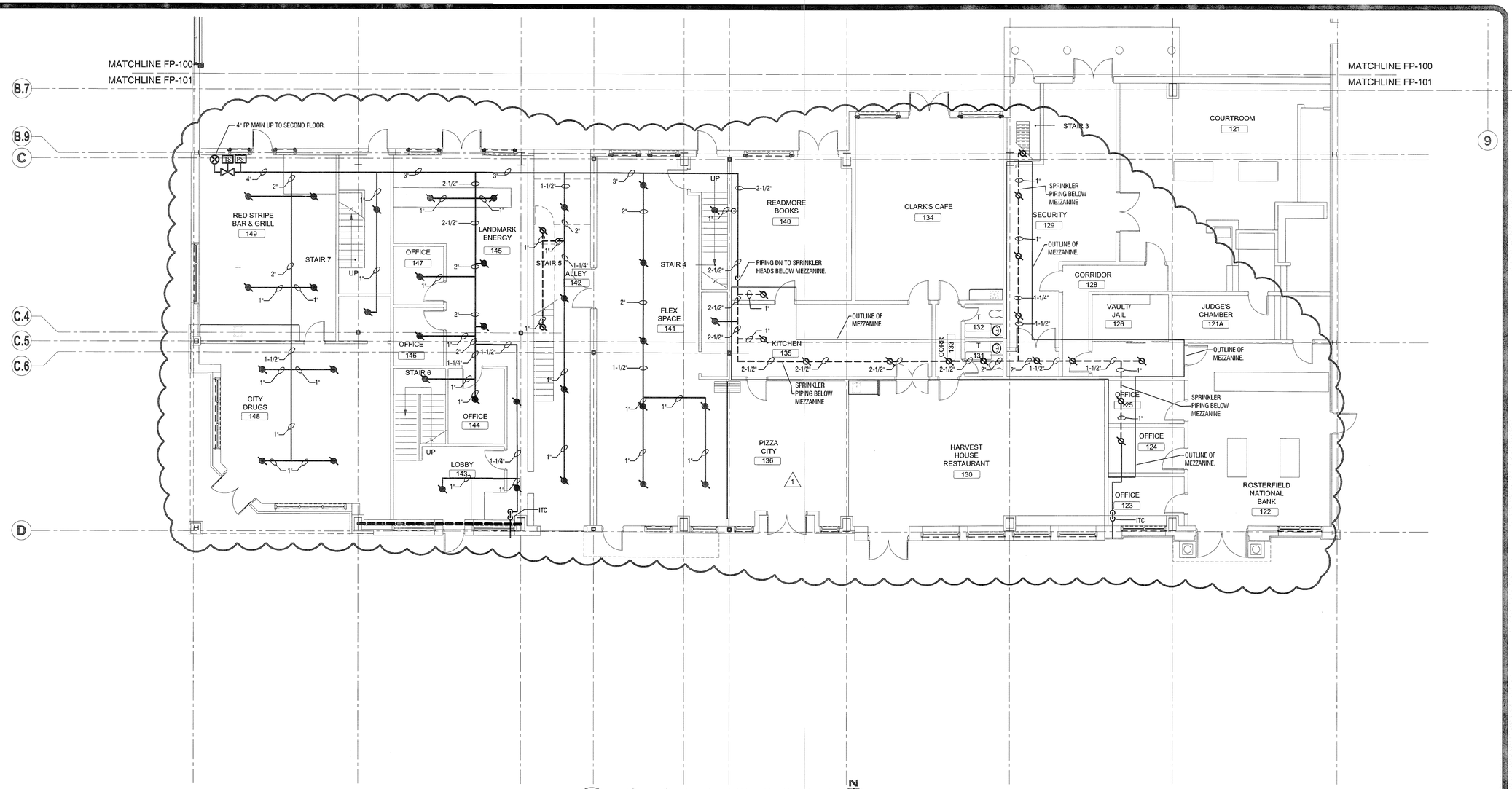

1 / FP-101 FIRST FLOOR FIRE PROTECTION PLAN

SCALE 1/8" = 1'-0"

N

GENERAL NOTES:

A. REFER TO ARCHITECTURAL PLANS FOR CEILING TYPES AND ELEVATIONS.

B. REFER TO ARCHITECTURAL, HVAC AND ELECTRICAL PLANS FOR LIGHTS AND DIFFUSER LOCATIONS AND COORDINATE SPRINKLER LOCATIONS WITH HVAC AND ELECTRICAL CONTRACTORS.

C. COORDINATE THE LOCATIONS OF SPRINKLER HEADS WITH CEILING GRID TO CENTER SPRINKLER HEADS IN CEILING TILES.

D. COORDINATE SPRINKLER MAINS AND BRANCH PIPING TO SPRINKLERS LOCATED ABOVE CEILINGS WITH DUCTWORK, PLUMBING DOMESTIC PIPING, HEATING PIPING, AND ELECTRICAL CONDUIT AND CABLE TRAYS. REFER TO HVAC AND ELECTICAL AND PLUMBING DRAWINGS FOR ABOVE CEILING EQUIPMENT, DUCTWORK, PIPING, CONDUIT, AND CABLE TRAYS.

NYS OFFICE OF GENERAL SERVICES
Serving New York
ANDREW M. CUOMO
Governor
ROANN M. DESTITO
COMMISSIONER
JAMES M. DAVIES, A.I.A.
Deputy Commissioner, Design and Construction

CONSULTANT

LABELLA Associates, P.C.
Engineering Architecture Environment Planning
300 STATE STREET, SUITE 201
ROCHESTER, NY 14614
P: (585) 454-6110
F: (585) 454-3066
www.labellapc.com

Copyright © 2011

WARNING:

THE ALTERATION OF THIS MATERIAL IN ANY WAY, UNLESS DONE UNDER THE DIRECTION OF A COMPARABLE PROFESSIONAL, I.E. ARCHITECT FOR AN ARCHITECT, ENGINEER FOR AN ENGINEER OR LANDSCAPE ARCHITECT FOR A LANDSCAPE ARCHITECT, IS A VIOLATION OF THE NEW YORK STATE EDUCATION LAW AND/OR REGULATIONS AND IS A CLASS "A" MISDEMEANOR.

STATE OF NEW YORK · RICHARD W. MEYERING · 059923 · LICENSED PROFESSIONAL ENGINEER

CONTRACT:
PLUMBING

TITLE:
PROVIDE CITYSCAPE COMPLEX

LOCATION:
STATE PREPAREDNESS TRAINING CENTER
5900 AIRPORT ROAD
ORISKANY, NY 13424

CLIENT:
DIVISION OF HOMELAND SECURITY & EMERGENCY SERVICES

REVISED DRAWING 09/05/2012

MARK	DATE	DESCRIPTION
1	09/05/2012	ADDENDUM 6
	07/05/2012	FINAL SUBMISSION

PROJECT NUMBER:	44014 – P
DESIGNED BY:	DWM
DRAWN BY:	JMB
FIELD CHECK:	XXXXX
APPROVED:	RWM

SHEET TITLE:
SOUTH FIRST FLOOR FIRE PROTECTION PLAN

DRAWING NUMBER:
FP–101

SHEET X OF X

Y:\NYSOGS\208194.10\Drawings\MEEP\NYSOGS City Scape\Views\MEEP\Fire Prot\F1.00 - Floor Plans\FP-101South 1st Floor Fire Protection Plan.dwg, 9/5/2012 1:22:58 PM, Xerox2 HD1.pc3
Sep 05,2012 – 1:22pm
Y:\NYSOGS\208194.10\Drawings\MEEP\NYSOGS City Scape\Views\MEEP\Fire Prot\F1.00 – Floor Plans\FP–101South 1st Floor Fire Protection Plan.dwg
36x24 PLOT SHEET

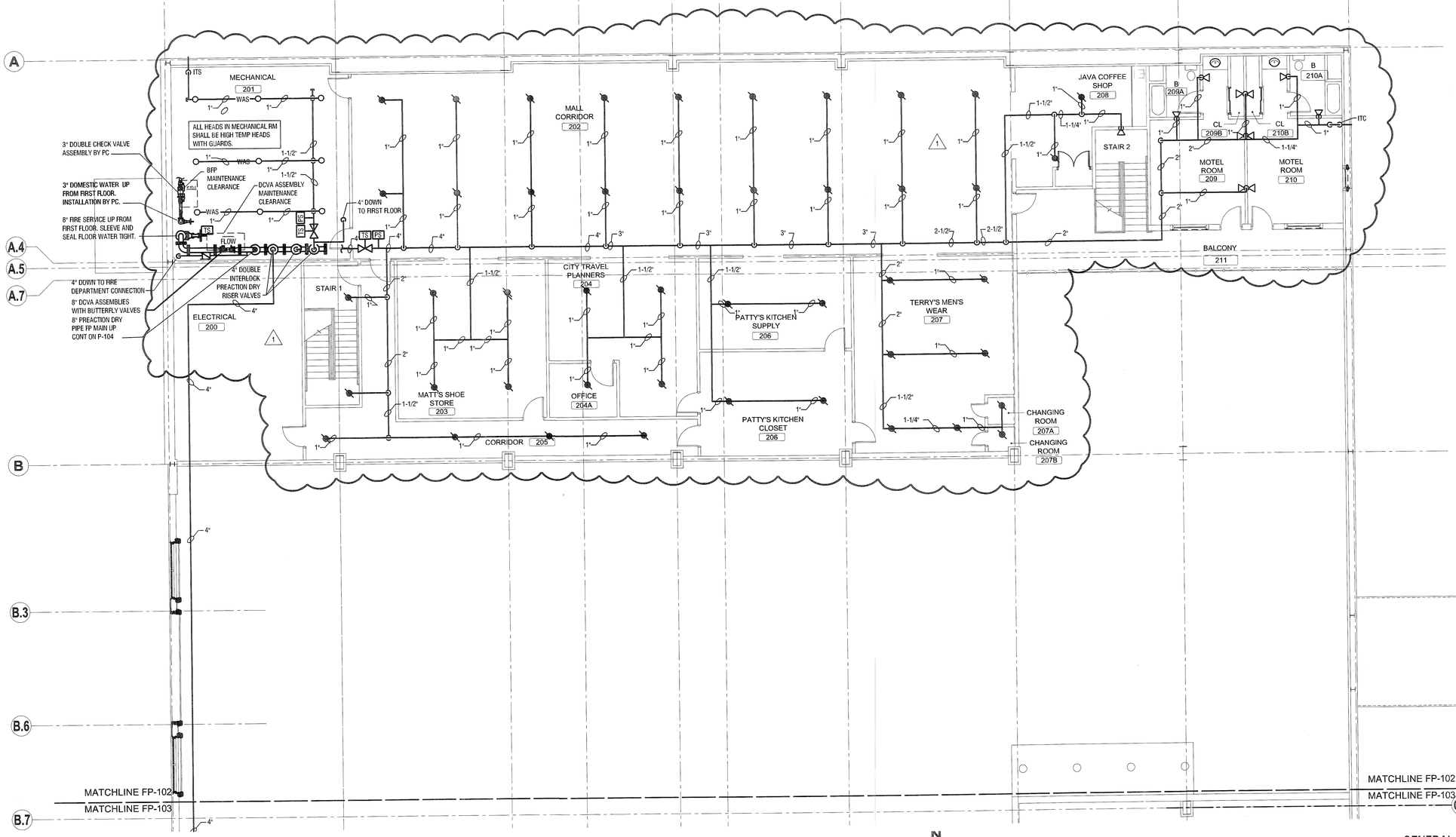

1 FP-102 SECOND FLOOR FIRE PROTECTION PLAN

SCALE 1/8" = 1'-0"

GENERAL NOTES:

A. REFER TO ARCHITECTURAL PLANS FOR CEILING TYPES AND ELEVATIONS.

B. REFER TO ARCHITECTURAL, HVAC AND ELECTRICAL PLANS FOR LIGHTS AND DIFFUSER LOCATIONS AND COORDINATE SPRINKLER LOCATIONS WITH HVAC AND ELECTRICAL CONTRACTORS.

C. COORDINATE THE LOCATIONS OF SPRINKLER HEADS WITH CEILING GRID TO CENTER SPRINKLER HEADS IN CEILING TILES.

D. COORDINATE SPRINKLER MAINS AND BRANCH PIPING TO SPRINKLERS LOCATED ABOVE CEILINGS WITH DUCTWORK, PLUMBING DOMESTIC PIPING, HEATING PIPING, AND ELECTRICAL CONDUIT AND CABLE TRAYS. REFER TO HVAC AND ELECTICAL AND PLUMBING DRAWINGS FOR ABOVE CEILING EQUIPMENT, DUCTWORK, PIPING, CONDUIT, AND CABLE TRAYS.

NYS OFFICE OF GENERAL SERVICES

Serving New York

ANDREW M. CUOMO
Governor
ROANN M. DESTITO
COMMISSIONER
JAMES M. DAVIES, A.I.A.
Deputy Commissioner, Design and Construction

CONSULTANT

ABELLA Associates, P.C. — Engineering Architecture Environmental Planning

300 STATE STREET, SUITE 201
ROCHESTER, NY 14614
P: (585) 454-6110
F: (585) 454-3055

www.abellapc.com
Copyright © 2011

WARNING:

THE ALTERATION OF THIS MATERIAL IN ANY WAY, UNLESS DONE UNDER THE DIRECTION OF A COMPARABLE PROFESSIONAL, I.E. ARCHITECT FOR AN ARCHITECT, ENGINEER FOR AN ENGINEER OR LANDSCAPE ARCHITECT FOR A LANDSCAPE ARCHITECT, IS A VIOLATION OF THE NEW YORK STATE EDUCATION LAW AND/OR REGULATIONS AND IS A CLASS 'A' MISDEMEANOR.

STATE OF NEW YORK · RICHARD W. M... · 059923 · LICENSED PROFESSIONAL ENGINEER

CONTRACT:
PLUMBING

TITLE:
PROVIDE CITYSCAPE COMPLEX

LOCATION:
STATE PREPAREDNESS TRAINING CENTER
5900 AIRPORT ROAD
ORISKANY, NY 13424

CLIENT:
DIVISION OF HOMELAND SECURITY & EMERGENCY SERVICES

REVISED DRAWING 09/05/2012

MARK	DATE	DESCRIPTION
1	09/05/2012	ADDENDUM 6
	07/05/2012	FINAL SUBMISSION

PROJECT NUMBER:	44014 – P
DESIGNED BY:	DWM
DRAWN BY:	JMB
FIELD CHECK:	XXXXX
APPROVED:	RWM

SHEET TITLE:
NORTH SECOND FLOOR FIRE PROTECTION PLAN

DRAWING NUMBER:
FP–102

SHEET X OF X

Y:\NYSOGS\208194.10\Drawings\MEEP\NYSOGS City Scape\Views\MEEP\Fire Prot\F1.00 - Floor Plans\FP-102 North 2nd Floor Fire Protection Plan.dwg, 9/5/2012 1:11:46 PM, Xerox2 HDI.pc3

Sep 05,2012 – 1:11pm
Y:\NYSOGS\208194.10\Drawings\MEEP\NYSOGS City Scape\Views\MEEP\Fire Prot\F1.00 – Floor Plans\FP–102 North 2nd Floor Fire Protection Plan.dwg

36x24 PLOT SHEET

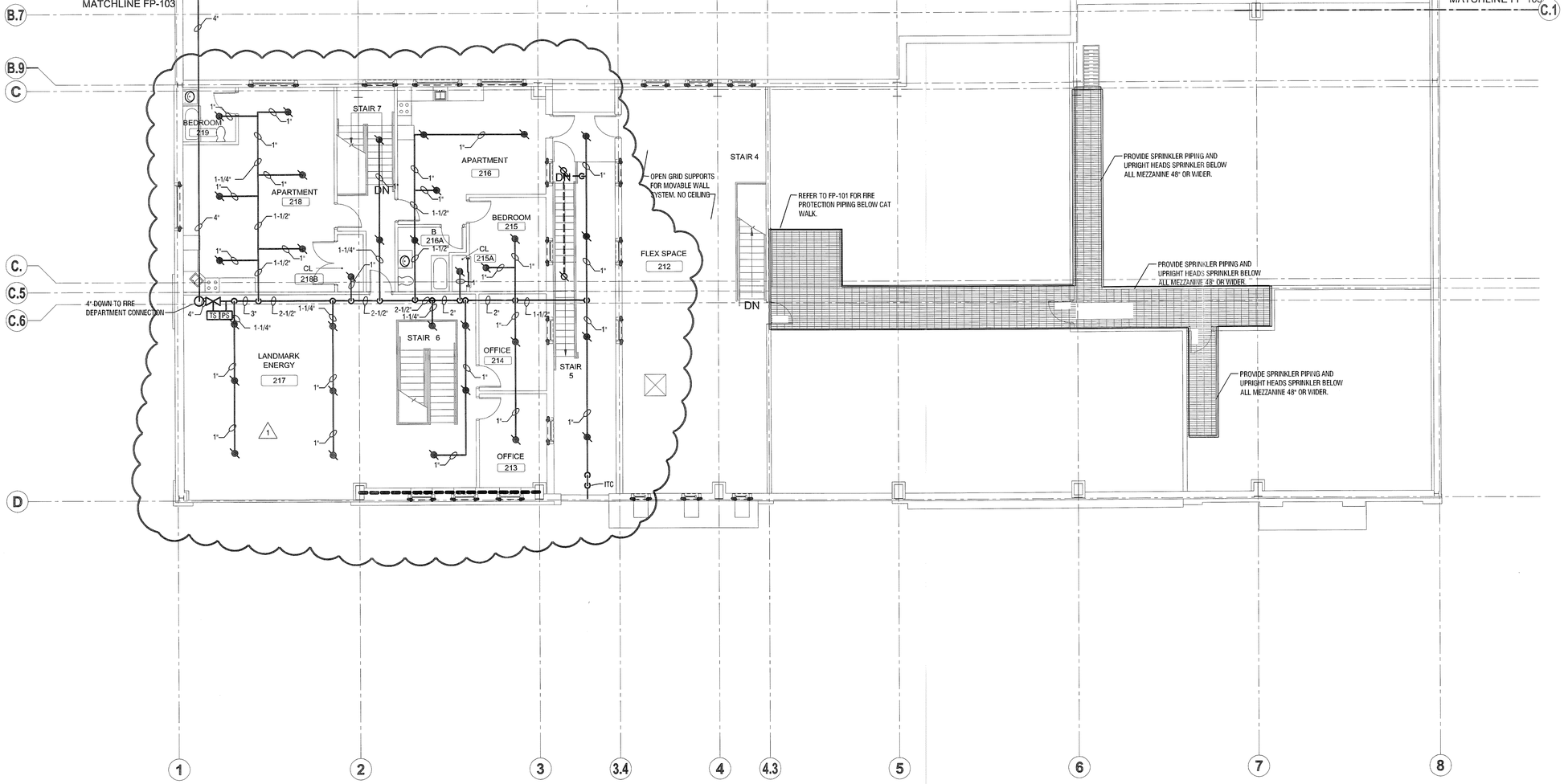

1 / FP-103 SECOND FLOOR FIRE PROTECTION PLAN

SCALE 1/8" = 1'-0"

N

GENERAL NOTES:

A. REFER TO ARCHITECTURAL PLANS FOR CEILING TYPES AND ELEVATIONS.

B. REFER TO ARCHITECTURAL, HVAC AND ELECTRICAL PLANS FOR LIGHTS AND DIFFUSER LOCATIONS AND COORDINATE SPRINKLER LOCATIONS WITH HVAC AND ELECTRICAL CONTRACTORS.

C. COORDINATE THE LOCATIONS OF SPRINKLER HEADS WITH CEILING GRID TO CENTER SPRINKLER HEADS IN CEILING TILES.

D. COORDINATE SPRINKLER MAINS AND BRANCH PIPING TO SPRINKLERS LOCATED ABOVE CEILINGS WITH DUCTWORK, PLUMBING DOMESTIC PIPING, HEATING PIPING, AND ELECTRICAL CONDUIT AND CABLE TRAYS. REFER TO HVAC AND ELECTRICAL AND PLUMBING DRAWINGS FOR ABOVE CEILING EQUIPMENT, DUCTWORK, PIPING, CONDUIT, AND CABLE TRAYS.

ROANN M. DESTITO
COMMISSIONER
JAMES M. DAVIES, A.I.A.
Deputy Commissioner, Design and Construction

CONSULTANT

LABELLA Associates, P.C.
Engineering Architecture Environmental Planning

300 STATE STREET, SUITE 201
ROCHESTER, NY 14614
P: (585) 454-6110
F: (585) 454-3066
www.labellapc.com

Copyright © 2011

WARNING:

THE ALTERATION OF THIS MATERIAL IN ANY WAY, UNLESS DONE UNDER THE DIRECTION OF A COMPARABLE PROFESSIONAL, I.E. ARCHITECT FOR AN ARCHITECT, ENGINEER FOR AN ENGINEER OR LANDSCAPE ARCHITECT FOR A LANDSCAPE ARCHITECT, IS A VIOLATION OF THE NEW YORK STATE EDUCATION LAW AND/OR REGULATIONS AND IS A CLASS 'A' MISDEMEANOR.

STATE OF NEW YORK · RICHARD W. MCKING · 059923 · LICENSED PROFESSIONAL ENGINEER

CONTRACT:
PLUMBING

TITLE:
PROVIDE CITYSCAPE COMPLEX

LOCATION:
STATE PREPAREDNESS TRAINING CENTER
5900 AIRPORT ROAD
ORISKANY, NY 13424

CLIENT:
DIVISION OF HOMELAND SECURITY & EMERGENCY SERVICES

REVISED DRAWING
09/05/2012

MARK	DATE	DESCRIPTION
1	09/05/2012	ADDENDUM 6
	07/05/2012	FINAL SUBMISSION

PROJECT NUMBER:	44014 – P
DESIGNED BY:	DWM
DRAWN BY:	JWB
FIELD CHECK:	XXXXX
APPROVED:	RWM

SHEET TITLE:
SOUTH SECOND FLOOR FIRE PROTECTION PLAN

DRAWING NUMBER:
FP–103

SHEET X OF X

Y:\NYSOGS\208194.10\Drawings\MEEP\NYSOGS City Scape\Views\MEEP\Fire Prot\F1.00 – Floor Plans\FP–103 South 2nd Floor Fire Protection Plan.dwg
Sep 05,2012 – 1:14pm
Y:\NYSOGS\208194.10\Drawings\MEEP\NYSOGS City Scape\Views\MEEP\Fire Prot\F1.00 - Floor Plans\FP-103 South 2nd Floor Fire Protection Plan.dwg, 9/5/2012 1:14:44 PM, Xerox2 HDLpc3
36x24 PLOT SHEET

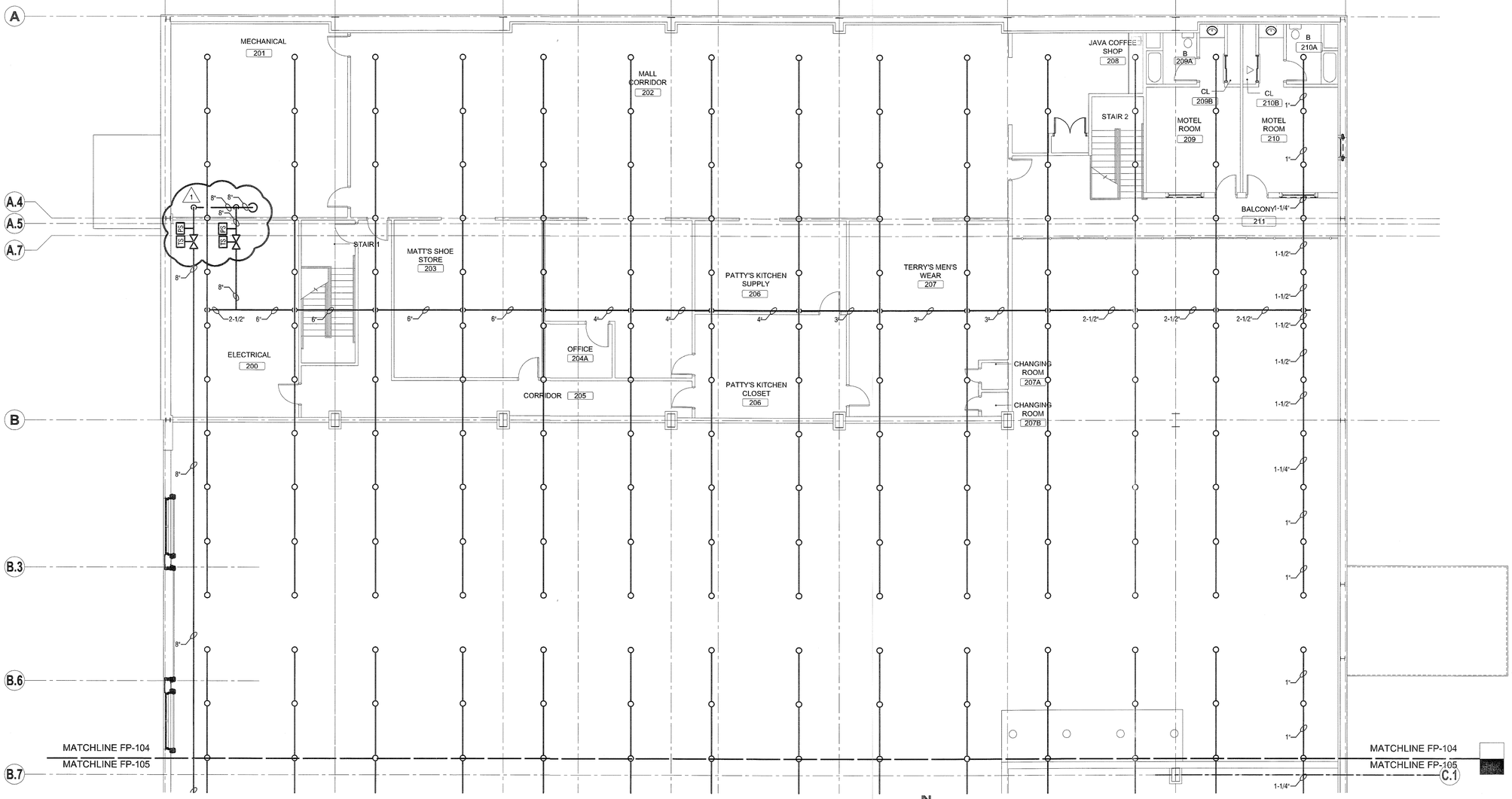

1 / FP-104 HIGH BAY FIRE PROTECTION PLAN
SCALE 1/8" = 1'-0"

GENERAL NOTES:

A. REFER TO ARCHITECTURAL PLANS FOR CEILING TYPES AND ELEVATIONS.

B. REFER TO ARCHITECTURAL, HVAC AND ELECTRICAL PLANS FOR LIGHTS AND DIFFUSER LOCATIONS AND COORDINATE SPRINKLER LOCATIONS WITH HVAC AND ELECTRICAL CONTRACTORS.

C. COORDINATE THE LOCATIONS OF SPRINKLER HEADS WITH CEILING GRID TO CENTER SPRINKLER HEADS IN CEILING TILES.

D. COORDINATE SPRINKLER MAINS AND BRANCH PIPING TO SPRINKLERS LOCATED ABOVE CEILINGS WITH DUCTWORK, PLUMBING DOMESTIC PIPING, HEATING PIPING, AND ELECTRICAL CONDUIT AND CABLE TRAYS. REFER TO HVAC AND ELECTRICAL AND PLUMBING DRAWINGS FOR ABOVE CEILING EQUIPMENT, DUCTWORK, PIPING, CONDUIT, AND CABLE TRAYS.

NYS OFFICE OF GENERAL SERVICES

Serving New York

ANDREW M. CUOMO
Governor
ROANN M. DESTITO
COMMISSIONER
JAMES M. DAVIES, A.I.A.
Deputy Commissioner, Design and Construction

CONSULTANT

LABELLA Associates, P.C.
Engineering Architecture Environment Planning
300 STATE STREET, SUITE 201
ROCHESTER, NY 14614
P: (585) 454-6110
F: (585) 454-3066
www.labellapc.com
Copyright © 2011

WARNING:

THE ALTERATION OF THIS MATERIAL IN ANY WAY, UNLESS DONE UNDER THE DIRECTION OF A COMPARABLE PROFESSIONAL, I.E., ARCHITECT FOR AN ARCHITECT, ENGINEER FOR AN ENGINEER OR LANDSCAPE ARCHITECT FOR A LANDSCAPE ARCHITECT, IS A VIOLATION OF THE NEW YORK STATE EDUCATION LAW AND/OR REGULATIONS AND IS A CLASS 'A' MISDEMEANOR.

STATE OF NEW YORK · RICHARD W. MOSER · 059923 · LICENSED PROFESSIONAL ENGINEER

CONTRACT:
PLUMBING

TITLE:
PROVIDE CITYSCAPE COMPLEX

LOCATION:
STATE PREPAREDNESS TRAINING CENTER
5900 AIRPORT ROAD
ORISKANY, NY 13424

CLIENT:
DIVISION OF HOMELAND SECURITY & EMERGENCY SERVICES

REVISED DRAWING
09/05/2012

MARK	DATE	DESCRIPTION
1	09/05/2012	ADDENDUM 6
	07/05/2012	FINAL SUBMISSION

PROJECT NUMBER:	44014 – P
DESIGNED BY:	DWM
DRAWN BY:	JMB
FIELD CHECK:	XXXXX
APPROVED:	RWM

SHEET TITLE:
NORTH HIGH BAY FIRE PROTECTION PLAN

DRAWING NUMBER:
FP–104

SHEET X OF X

Y:\NYSOGS\208194.10\Drawings\MEEP\NYSOGS City Scape\Views\MEEP\Fire Prot\F1.00 - Floor Plans\FP-104 North High Bay Fire Protection Plan.dwg 9/5/2012 12:44:57 PM, Xerox2 HDI.pc3
Sep 05,2012 – 12:44pm
Y:\NYSOGS\208194.10\Drawings\MEEP\NYSOGS City Scape\Views\MEEP\Fire Prot\F1.00 – Floor Plans\FP-104 North High Bay Fire Protection Plan.dwg
36x24 PLOT SHEET

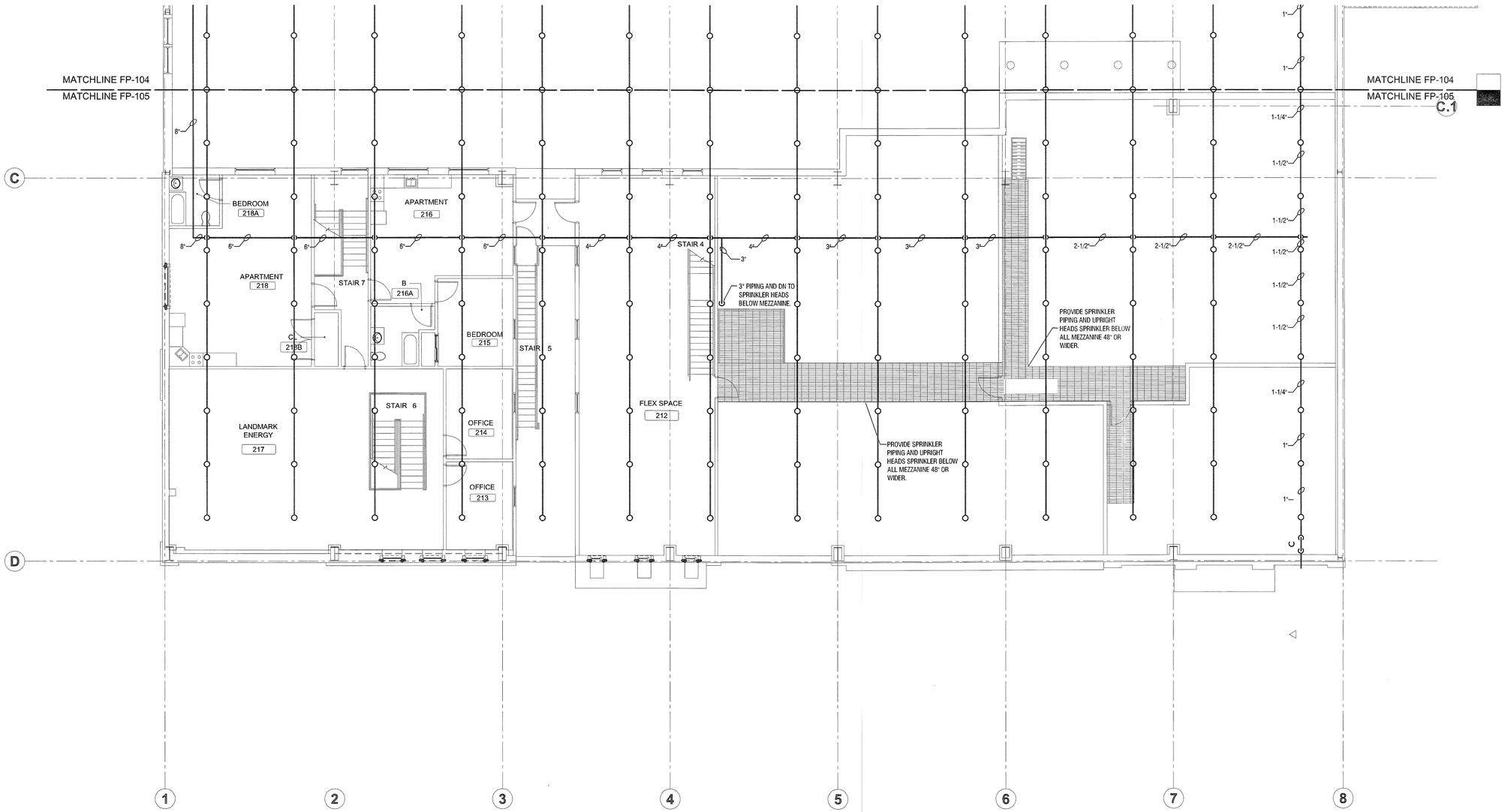

1 / FP-105 HIGH BAY FIRE PROTECTION PLAN

SCALE 1/8" = 1'-0"

N

GENERAL NOTES:

A. REFER TO ARCHITECTURAL PLANS FOR CEILING TYPES AND ELEVATIONS.

B. REFER TO ARCHITECTURAL, HVAC AND ELECTRICAL PLANS FOR LIGHTS AND DIFFUSER LOCATIONS AND COORDINATE SPRINKLER LOCATIONS WITH HVAC AND ELECTRICAL CONTRACTORS.

C. COORDINATE THE LOCATIONS OF SPRINKLER HEADS WITH CEILING GRID TO CENTER SPRINKLER HEADS IN CEILING TILES.

D. COORDINATE SPRINKLER MAINS AND BRANCH PIPING TO SPRINKLERS LOCATED ABOVE CEILINGS WITH DUCTWORK, PLUMBING DOMESTIC PIPING, HEATING PIPING, AND ELECTRICAL CONDUIT AND CABLE TRAYS. REFER TO HVAC AND ELECTRICAL AND PLUMBING DRAWINGS FOR ABOVE CEILING EQUIPMENT, DUCTWORK, PIPING, CONDUIT, AND CABLE TRAYS.

NYS OFFICE OF GENERAL SERVICES

Serving New York

ANDREW M. CUOMO
Governor
ROANN M. DESTITO
COMMISSIONER
JAMES M. DAVIES, A.I.A.
Deputy Commissioner, Design and Construction

CONSULTANT

LABELLA Associates, P.C. — Engineering Architecture Environmental Planning

300 STATE STREET, SUITE 201
ROCHESTER, NY 14614
P: (585) 454-6110
F: (585) 454-3066

www.labellapc.com
Copyright © 2011

WARNING:

THE ALTERATION OF THIS MATERIAL IN ANY WAY, UNLESS DONE UNDER THE DIRECTION OF A COMPARABLE PROFESSIONAL, I.E. ARCHITECT FOR AN ARCHITECT, ENGINEER FOR AN ENGINEER OR LANDSCAPE ARCHITECT FOR A LANDSCAPE ARCHITECT, IS A VIOLATION OF THE NEW YORK STATE EDUCATION LAW AND/OR REGULATIONS AND IS A CLASS "A" MISDEMEANOR.

STATE OF NEW YORK — RICHARD W. MAGNUS — 059923 — LICENSED PROFESSIONAL ENGINEER

CONTRACT:
PLUMBING

TITLE:
PROVIDE CITYSCAPE COMPLEX

LOCATION:
STATE PREPAREDNESS TRAINING CENTER
5900 AIRPORT ROAD
ORISKANY, NY 13424

CLIENT:
DIVISION OF HOMELAND SECURITY & EMERGENCY SERVICES

REVISED DRAWING
09/05/2012

MARK	DATE	DESCRIPTION
1	09/05/2012	ADDENDUM 6
	07/05/2012	FINAL SUBMISSION

PROJECT NUMBER:	44014 – P
DESIGNED BY:	DWM
DRAWN BY:	DWM
FIELD CHECK:	XXXXX
APPROVED:	RWM

SHEET TITLE:
SOUTH HIGH BAY FIRE PROTECTION PLAN

DRAWING NUMBER:
FP–105

SHEET X OF X

Y:\NYSOGS\208194.10\Drawings\MEEP\NYSOGS City Scape\Views\MEEP\Fire Prot\F1.00 - Floor Plans\FP-105 South High Bay Fire Protection Plan.dwg 9/5/2012 10:08:57 AM, Xerox2 HD1.pc3
Sep 05,2012 – 10:08am
Y:\NYSOGS\208194.10\Drawings\MEEP\NYSOGS City Scape\Views\MEEP\Fire Prot\F1.00 – Floor Plans\FP-105 South High Bay Fire Protection Plan.dwg
36x24 PLOT SHEET

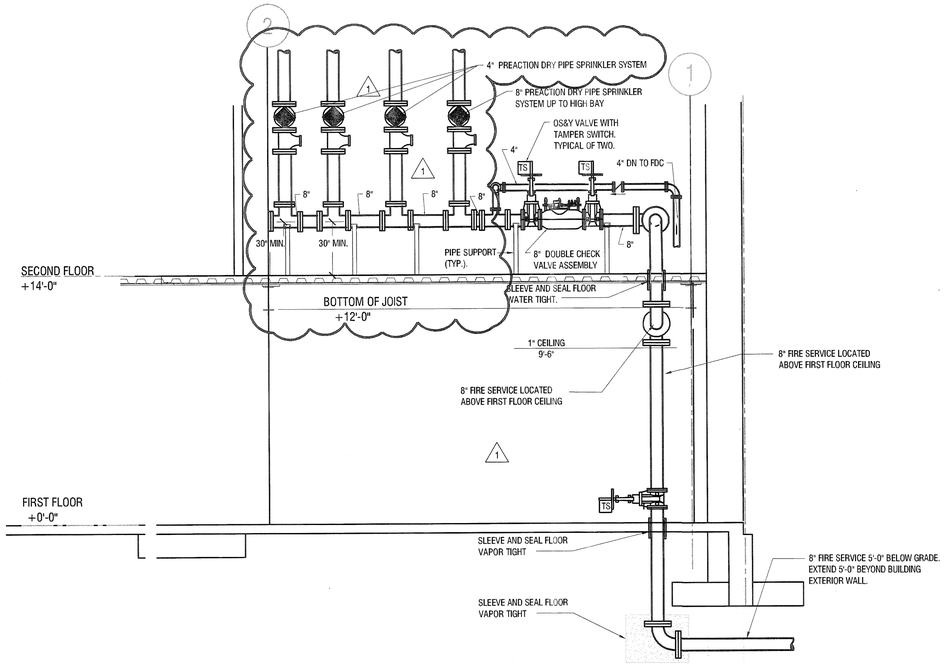

2 P-200 SECTION A-A
SCALE 1/8" = 1'-0"

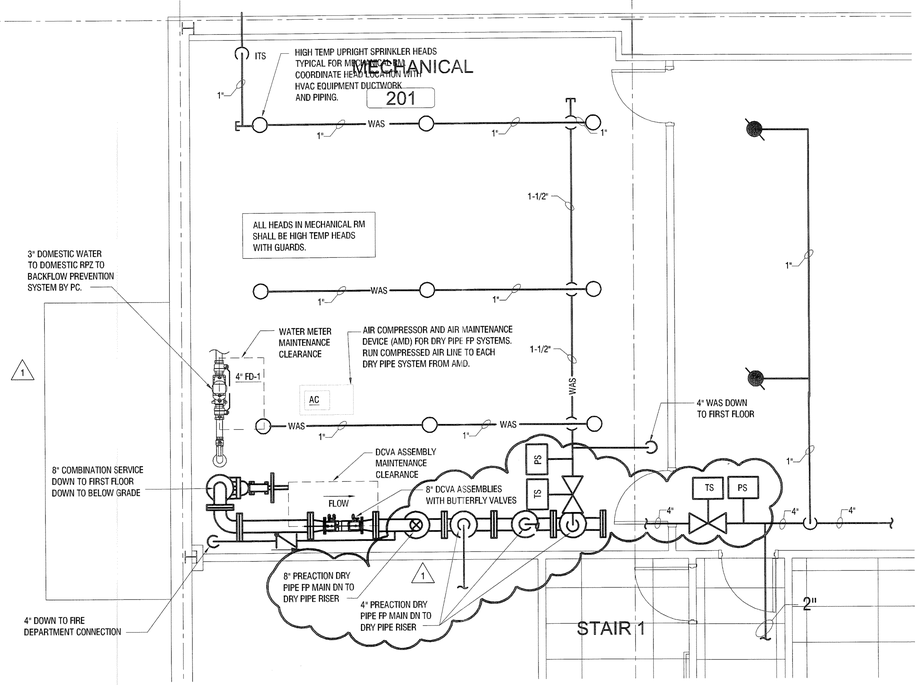

1 P-200 MECHANICAL ROOM PLAN
SCALE 1/4" = 1'-0"

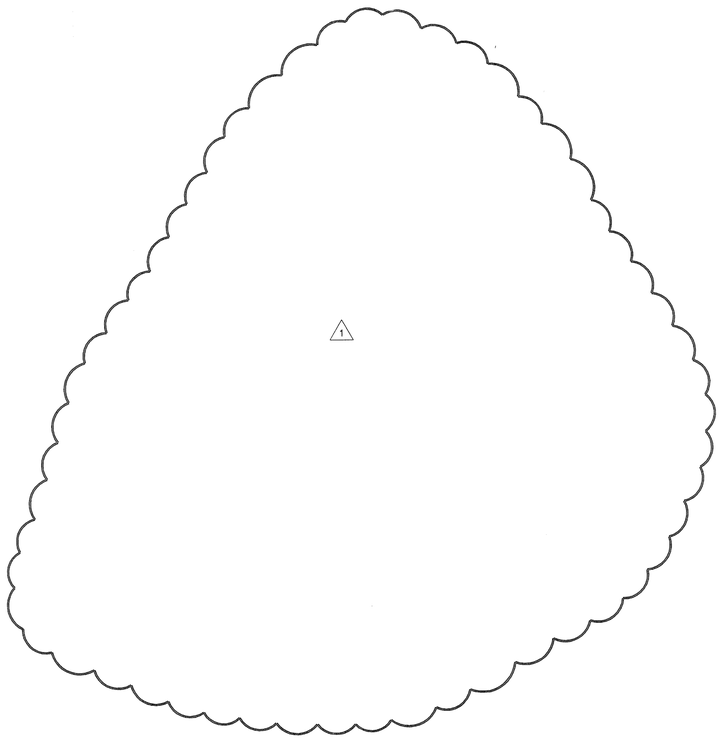

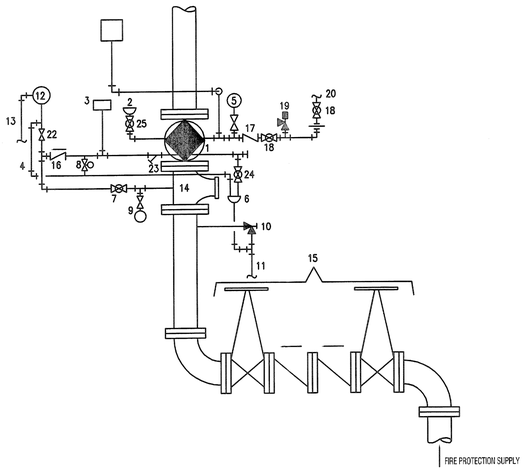

1. DRY PIPE VALVE
2. PRIMING CUP
3. LOCAL ALARM SWITCH OR ALARM TRANSMITTER
4. RESTRICTED ALARM VENT
5. AIR PRESSURE GAGE
6. DIP CUP
7. ALARM TEST VALVE (NORMALLY CLOSED)
8. AUTOMATIC DRAIN VALVE
9. WATER PRESSURE GAGE
10. MAIN DRAIN ANGLE VALVE
11. DRIP CUP AND MAIN DRAIN DISCHARGE TO OUTSIDE OF BLDG. (4'-0" - PIPE LENGTH INSIDE OF BLDG.)
12. WATER MOTOR GONG
13. DRAIN RUN THROUGH WALL TO OUTSIDE OF BLDG.
14. TEE FOR FIRE DEPARTMENT CONNECTION
15. DOUBLE CHECK VALVE BACKFLOW PREVENTER WITH OS & Y GATE VALVES (w/ TAMPER SWITCHES)
16. CHECK VALVE TO PREVENT TRIPPING VALVE WHEN TESTING ALARM
17. AIR LINE CHECK VALVE
18. AIR SUPPLY GLOBE VALVE (RENEWABLE DISC TYPE)
19. PRESSURE RELIEF VALVE
20. AIR SUPPLY LINE
21. ELECTRIC LOW AIR PRESSURE ALARM TRANSMITTER
22. ALARM CONTROL VALVE (NORMALLY OPEN)
23. STRAINER
24. DRAIN GLOBE VALVE
25. PRIMING VALVE (NORMALLY CLOSED)

3 P-200 DRY PIPE SPRINKLER RISER
SCALE: N.T.S.

NYS OFFICE OF GENERAL SERVICES
Serving New York
ANDREW M. CUOMO
Governor
ROANN M. DESTITO
COMMISSIONER
JAMES M. DAVIES, A.I.A.
Deputy Commissioner, Design and Construction

CONSULTANT
LABELLA Associates, P.C.
Engineering Architecture Environment Planning
300 STATE STREET, SUITE 201
ROCHESTER, NY 14614
P: (585) 454-6110
F: (585) 454-3066
www.labellapc.com

Copyright © 2011

WARNING:
THE ALTERATION OF THIS MATERIAL IN ANY WAY, UNLESS DONE UNDER THE DIRECTION OF A COMPARABLE PROFESSIONAL, I.E. ARCHITECT FOR AN ARCHITECT, ENGINEER FOR AN ENGINEER OR LANDSCAPE ARCHITECT FOR A LANDSCAPE ARCHITECT, IS A VIOLATION OF THE NEW YORK STATE EDUCATION LAW AND/OR REGULATIONS AND IS A CLASS 'A' MISDEMEANOR.

STATE OF NEW YORK · RICHARD W. MOORE · 059923 · LICENSED PROFESSIONAL ENGINEER

CONTRACT:
PLUMBING

TITLE:
PROVIDE CITYSCAPE COMPLEX

LOCATION:
STATE PREPAREDNESS TRAINING CENTER
5900 AIRPORT ROAD
ORISKANY, NY 13424

CLIENT:
DIVISION OF HOMELAND SECURITY & EMERGENCY SERVICES

REVISED DRAWING 09/05/2012

MARK	DATE	DESCRIPTION
1	09/05/2012	ADDENDUM 6
	07/05/2012	FINAL SUBMISSION

PROJECT NUMBER:	44014 – P
DESIGNED BY:	DWM
DRAWN BY:	JMB
FIELD CHECK:	XXXXX
APPROVED:	RWM

SHEET TITLE:
1/4 SCALE
FIRE PROTECTION PLAN

DRAWING NUMBER:
FP–200

SHEET X OF X

Y:\NYSOGS\208194.10\Drawings\MEEP\NYSOGS City Scape\Views\MEEP\Fire Prot\F2.00 - Sections and Details\FP-200 LARGE SCALE PLANS.dwg, 9/5/2012 12:39:08 PM, Xerox2 HD1.pc3
Sep 05,2012 – 12:39pm
Y:\NYSOGS\208194.10\Drawings\MEEP\NYSOGS City Scape\Views\MEEP\Fire Prot\F2.00 – Sections and Details\FP-200 LARGE SCALE PLANS.dwg
36x24 PLOT SHEET

NOTES

1. SPRINKLER CONTRACTOR TO COORDINATE HEIGHT & LOCATION OF FIRE DEPT. CONNECTION WITH LOCAL FIRE DEPARTMENT.
2. SPRINKLER CONTRACTOR TO COORDINATE THREADS ON FIRE DEPT. CONNECTION WITH LOCAL FIRE DEPARTMENT.

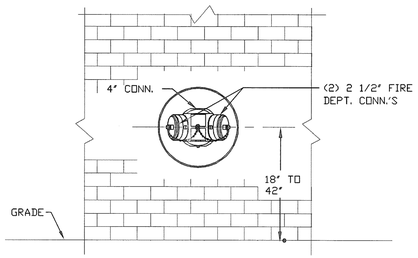

5 / FP-600 FIRE DEPARTMENT CONNECTION
N.T.S.

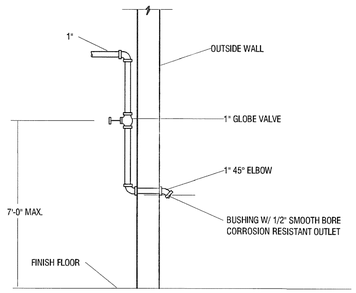

4 / FP-600 INSPECTORS TEST CONNECTION
N.T.S.

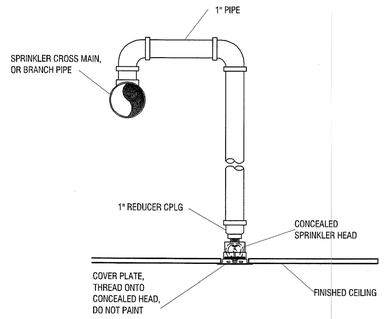

3 / FP-600 CONCEALED SPRINKLER HEAD
N.T.S.

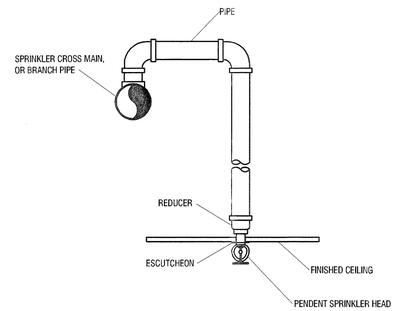

2 / FP-600 PENDENT SPRINKLER HEAD
N.T.S.

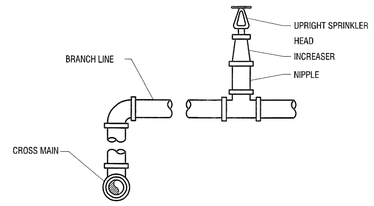

1 / FP-600 UPRIGHT SPRINKLER HEAD
N.T.S.

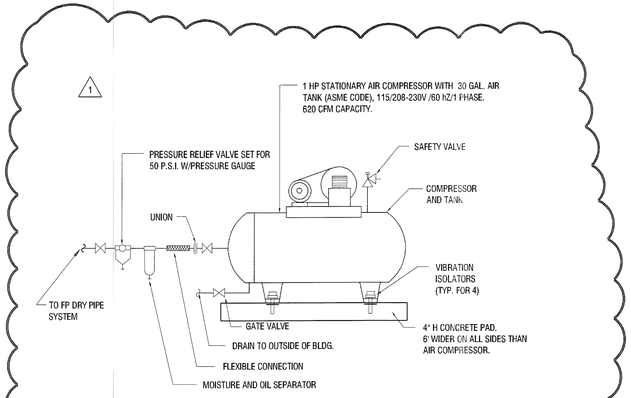

7 / FP-600 AIR COMPRESSOR DETAIL
N.T.S.

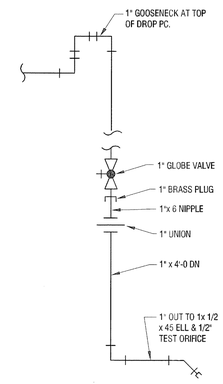

6 / FP-600 DRY INSPECTORS TEST STATION
N.T.S.

NYS OFFICE OF GENERAL SERVICES
Serving New York
ANDREW M. CUOMO
Governor
ROANN M. DESTITO
COMMISSIONER
JAMES M. DAVIES, A.I.A.
Deputy Commissioner, Design and Construction

CONSULTANT

LABELLA Associates, P.C.
Engineering Architecture Environmental Planning
300 STATE STREET, SUITE 201
ROCHESTER, NY 14614
P: (585) 454-6110
F: (585) 454-3066
www.labellapc.com

Copyright © 2011

WARNING:

THE ALTERATION OF THIS MATERIAL IN ANY WAY, UNLESS DONE UNDER THE DIRECTION OF A COMPARABLE PROFESSIONAL, I.E. ARCHITECT FOR AN ARCHITECT, ENGINEER FOR AN ENGINEER OR LANDSCAPE ARCHITECT FOR A LANDSCAPE ARCHITECT, IS A VIOLATION OF THE NEW YORK STATE EDUCATION LAW AND/OR REGULATIONS AND IS A CLASS 'A' MISDEMEANOR.

STATE OF NEW YORK · RICHARD W. LABELLA · 059923 · LICENSED PROFESSIONAL ENGINEER

CONTRACT:
PLUMBING

TITLE:
PROVIDE CITYSCAPE COMPLEX

LOCATION:
STATE PREPAREDNESS TRAINING CENTER
5900 AIRPORT ROAD
ORISKANY, NY 13424

CLIENT:
DIVISION OF HOMELAND SECURITY & EMERGENCY SERVICES

REVISED DRAWING 09/05/2012

MARK	DATE	DESCRIPTION
1	09/05/2012	ADDENDUM 6
	07/05/2012	FINAL SUBMISSION

PROJECT NUMBER:	44014 – P
DESIGNED BY:	DWM
DRAWN BY:	DWM
FIELD CHECK:	XXXXX
APPROVED:	RWM

SHEET TITLE:
FIRE PROTECTION DETAILS

DRAWING NUMBER:
FP–500

SHEET X OF X

Y:\NYSOGS\208194.10\Drawings\MEEP\NYSOGS City Scape\Views\MEEP\Fire Prot\F2.00 - Sections and Details\FP-500 DETAILS.dwg, 9/5/2012 12:35:58 PM, Xerox2 HDLpc3
Sep 05,2012 – 12:35pm
Y:\NYSOGS\208194.10\Drawings\MEEP\NYSOGS City Scape\Views\MEEP\Fire Prot\F2.00 – Sections and Details\FP-500 DETAILS.dwg
36x24 PLOT SHEET

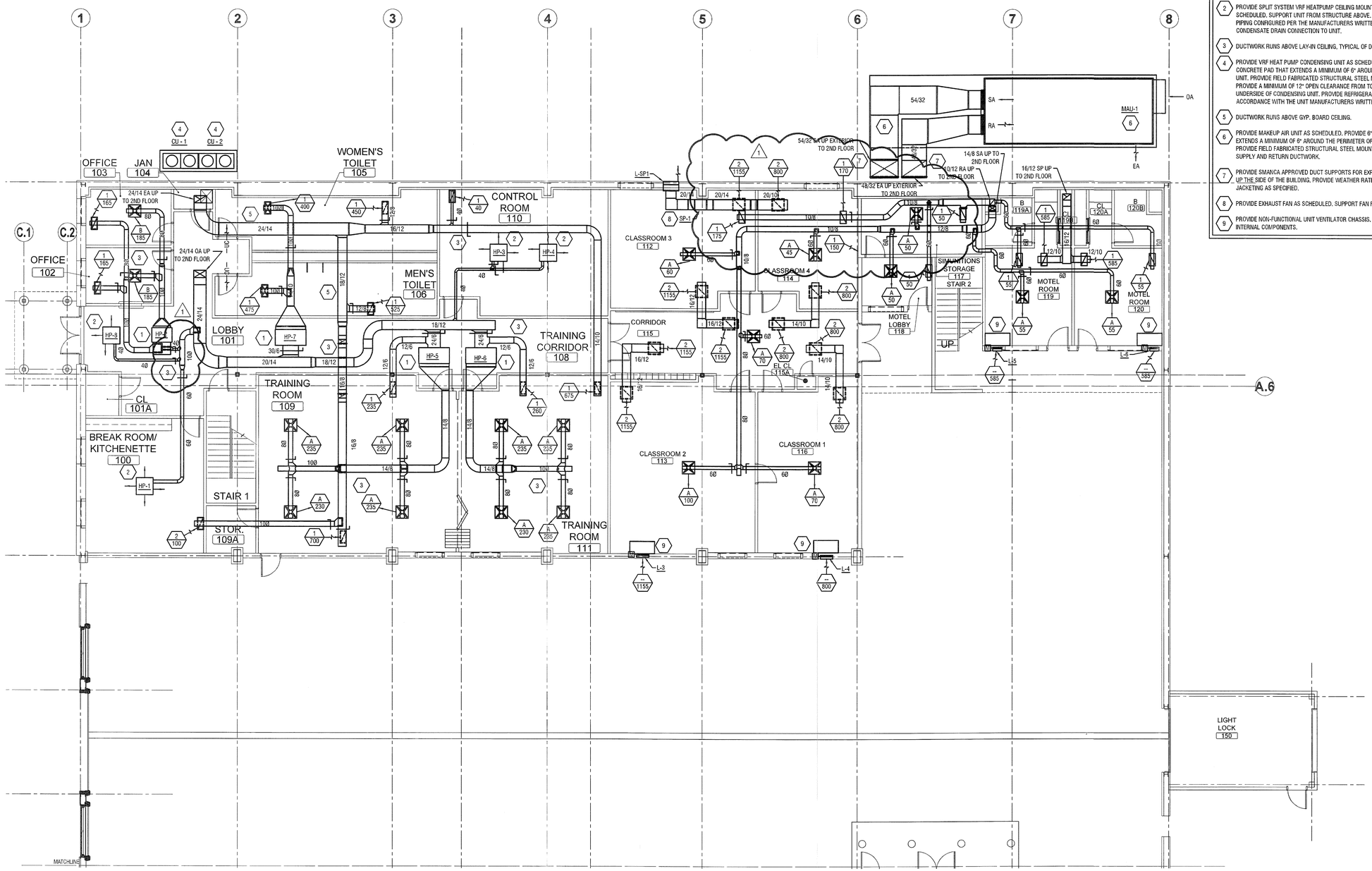

1 M-100 FIRST FLOOR PLAN
SCALE 1/8" = 1'-0"

KEY NOTES

1. PROVIDE SPLIT SYSTEM VRF HEATPUMP CEILING CONCEALED UNIT AS SCHEDULED. SUPPORT UNIT FROM STRUCTURE ABOVE. PROVIDE REFRIGERANT PIPING CONFIGURED PER THE MANUFACTURERS WRITTEN INSTRUCTIONS. PROVIDE CONDENSATE DRAIN CONNECTION TO UNIT.
2. PROVIDE SPLIT SYSTEM VRF HEATPUMP CEILING MOUNTED CASSETTE UNIT AS SCHEDULED. SUPPORT UNIT FROM STRUCTURE ABOVE. PROVIDE REFRIGERANT PIPING CONFIGURED PER THE MANUFACTURERS WRITTEN INSTRUCTIONS. PROVIDE CONDENSATE DRAIN CONNECTION TO UNIT.
3. DUCTWORK RUNS ABOVE LAY-IN CEILING, TYPICAL OF DUCTWORK IN THIS AREA.
4. PROVIDE VRF HEAT PUMP CONDENSING UNIT AS SCHEDULED. PROVIDE 6" TALL CONCRETE PAD THAT EXTENDS A MINIMUM OF 6" AROUND THE PERIMETER OF THE UNIT. PROVIDE FIELD FABRICATED STRUCTURAL STEEL MOUNTING STAND TO PROVIDE A MINIMUM OF 12" OPEN CLEARANCE FROM TOP OF CONCRETE PAD TO UNDERSIDE OF CONDENSING UNIT. PROVIDE REFRIGERANT PIPING SIZED IN ACCORDANCE WITH THE UNIT MANUFACTURERS WRITTEN INSTRUCTIONS.
5. DUCTWORK RUNS ABOVE GYP. BOARD CEILING.
6. PROVIDE MAKEUP AIR UNIT AS SCHEDULED. PROVIDE 6" TALL CONCRETE PAD THAT EXTENDS A MINIMUM OF 6" AROUND THE PERIMETER OF THE UNIT AND DUCTWORK. PROVIDE FIELD FABRICATED STRUCTURAL STEEL MOUNTING STAND TO SUPPORT SUPPLY AND RETURN DUCTWORK.
7. PROVIDE SMANCA APPROVED DUCT SUPPORTS FOR EXPOSED DUCTWORK RUNNING UP THE SIDE OF THE BUILDING. PROVIDE WEATHER RATED INSULATION AND JACKETING AS SPECIFIED.
8. PROVIDE EXHAUST FAN AS SCHEDULED. SUPPORT FAN FROM STRUCTURE ABOVE.
9. PROVIDE NON-FUNCTIONAL UNIT VENTILATOR CHASSIS. UNIT SHALL NOT HAVE ANY INTERNAL COMPONENTS.

NYS OFFICE OF GENERAL SERVICES
Serving New York
ANDREW M. CUOMO
Governor
ROANN M. DESTITO
COMMISSIONER
JAMES M. DAVIES, A.I.A.
Deputy Commissioner, Design and Construction

CONSULTANT
LABELLA Associates, P.C.
Engineering Architecture Environmental Planning
300 STATE STREET, SUITE 201
ROCHESTER, NY 14614
P: (585) 454-6110
F: (585) 454-3066
www.labellapc.com

Copyright © 2011

WARNING:
THE ALTERATION OF THIS MATERIAL IN ANY WAY, UNLESS DONE UNDER THE DIRECTION OF A COMPARABLE PROFESSIONAL, I.E. ARCHITECT FOR AN ARCHITECT, ENGINEER FOR AN ENGINEER OR LANDSCAPE ARCHITECT FOR A LANDSCAPE ARCHITECT, IS A VIOLATION OF THE NEW YORK STATE EDUCATION LAW AND/OR REGULATIONS AND IS A CLASS 'A' MISDEMEANOR.

STATE OF NEW YORK · RICHARD W. MCGINNIS · 059923 · PROFESSIONAL ENGINEER

CONTRACT: HVAC

TITLE: PROVIDE CITYSCAPE COMPLEX

LOCATION: STATE PREPAREDNESS TRAINING CENTER
5900 AIRPORT ROAD
ORISKANY, NY 13424

CLIENT: DIVISION OF HOMELAND SECURITY & EMERGENCY SERVICES

REVISED DRAWING 09/05/2012

MARK	DATE	DESCRIPTION
1	09/05/2012	ADDENDUM 6
	07/05/2012	FINAL SUBMISSION

PROJECT NUMBER:	44014- H
DESIGNED BY:	NKF
DRAWN BY:	NKF
FIELD CHECK:	XXXXX
APPROVED:	RWM

SHEET TITLE: NORTH FIRST FLOOR DUCT PLAN

DRAWING NUMBER: M-100

SHEET 2 OF 19

Sep 05,2012 - 9:12am
Y:\NYSGOS\268194.10\Drawings\MEEP\NYSGOS City Scape\Views\MEEP\Mech\M1.00 - Ductwork\M-100 North 1st Floor Duct Plan.dwg
26x24 PLOT SHEET

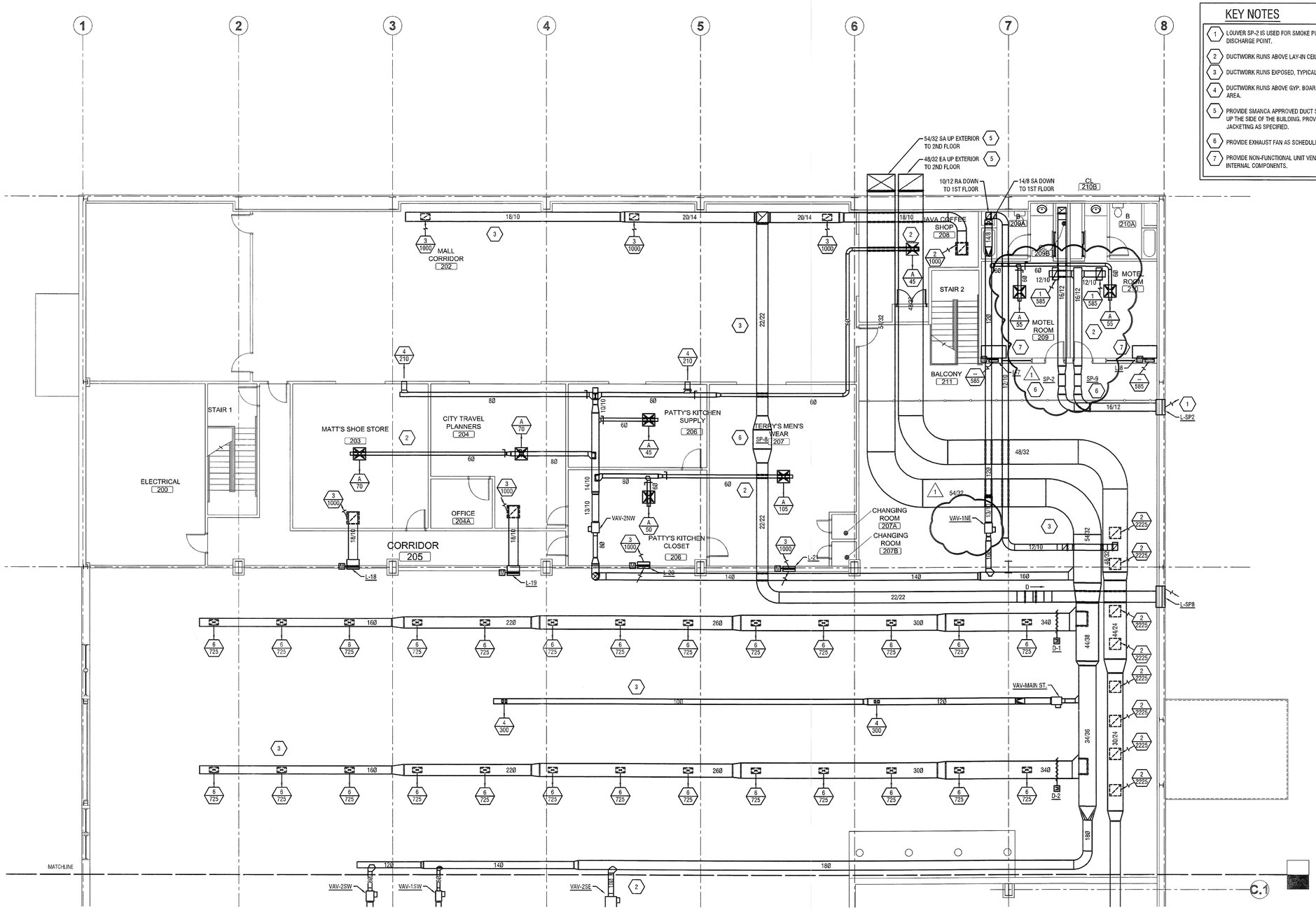

1 M-102 SECOND FLOOR DUCT PLAN
SCALE 1/8" = 1'-0"

KEY NOTES

1. LOUVER SP-2 IS USED FOR SMOKE PURGE FANS SP-2 & SP-9 AS A COMMON DISCHARGE POINT.
2. DUCTWORK RUNS ABOVE LAY-IN CEILING, TYPICAL OF DUCTWORK IN THIS AREA.
3. DUCTWORK RUNS EXPOSED, TYPICAL OF DUCTWORK IN THIS AREA.
4. DUCTWORK RUNS ABOVE GYP. BOARD CEILING, TYPICAL OF DUCTWORK IN THIS AREA.
5. PROVIDE SMANCA APPROVED DUCT SUPPORTS FOR EXPOSED DUCTWORK RUNNING UP THE SIDE OF THE BUILDING. PROVIDE WEATHER RATED INSULATION AND JACKETING AS SPECIFIED.
6. PROVIDE EXHAUST FAN AS SCHEDULED. SUPPORT FAN FROM STRUCTURE ABOVE.
7. PROVIDE NON-FUNCTIONAL UNIT VENTILATOR CHASSIS. UNIT SHALL NOT HAVE ANY INTERNAL COMPONENTS.

NYS OFFICE OF GENERAL SERVICES
Serving New York
ANDREW M. CUOMO
Governor
ROANN M. DESTITO
COMMISSIONER
JAMES M. DAVIES, A.I.A.
Deputy Commissioner, Design and Construction

CONSULTANT
LABELLA Associates, P.C.
Engineering Architecture Environmental Planning
300 STATE STREET, SUITE 201
ROCHESTER, NY 14614
P: (585) 454-6110
F: (585) 454-3066
www.labellapc.com

Copyright © 2011

WARNING:
THE ALTERATION OF THIS MATERIAL IN ANY WAY, UNLESS DONE UNDER THE DIRECTION OF A COMPARABLE PROFESSIONAL, I.E. ARCHITECT FOR AN ARCHITECT, ENGINEER FOR AN ENGINEER OR LANDSCAPE ARCHITECT FOR A LANDSCAPE ARCHITECT, IS A VIOLATION OF THE NEW YORK STATE EDUCATION LAW AND/OR REGULATIONS AND IS A CLASS 'A' MISDEMEANOR.

STATE OF NEW YORK · RICHARD W. MCCLOSKEY · 059923 · LICENSED PROFESSIONAL ENGINEER

CONTRACT: HVAC

TITLE: PROVIDE CITYSCAPE COMPLEX

LOCATION: STATE PREPAREDNESS TRAINING CENTER
5900 AIRPORT ROAD
ORISKANY, NY 13424

CLIENT: DIVISION OF HOMELAND SECURITY & EMERGENCY SERVICES

REVISED DRAWING 09/05/2012

MARK	DATE	DESCRIPTION
1	09/05/2012	ADDENDUM 6
	07/05/2012	FINAL SUBMISSION

PROJECT NUMBER:	44014 - H
DESIGNED BY:	NKF
DRAWN BY:	NKF
FIELD CHECK:	XXXXX
APPROVED:	RWM

SHEET TITLE: NORTH SECOND FLOOR DUCT PLAN

DRAWING NUMBER: M-102

SHEET 4 OF 19

Sep 05,2012 - 9:13am
Y:\WSOGS\208194.10\Drawings\MEEP\WSOGS City Scape\Views\MEEP\Mech\M1.00 - Ductwork\M-102 North 2nd Floor Duct Plan.dwg
36x24 PLOT SHEET

KEY NOTES:

1. REFER TO HOT WATER FINNED TUBE RADIATION DETAIL SHOWN ON M-500. PROVIDE PIPING AS SHOWN ON DETAIL. SET BALANCE VALVE FOR QUANTITY SHOWN ON THIS DRAWING.
2. HWS & HWR PIPING RUNS ABOVE LAY-IN CEILING. SUPPORT FROM STRUCTURE ABOVE.

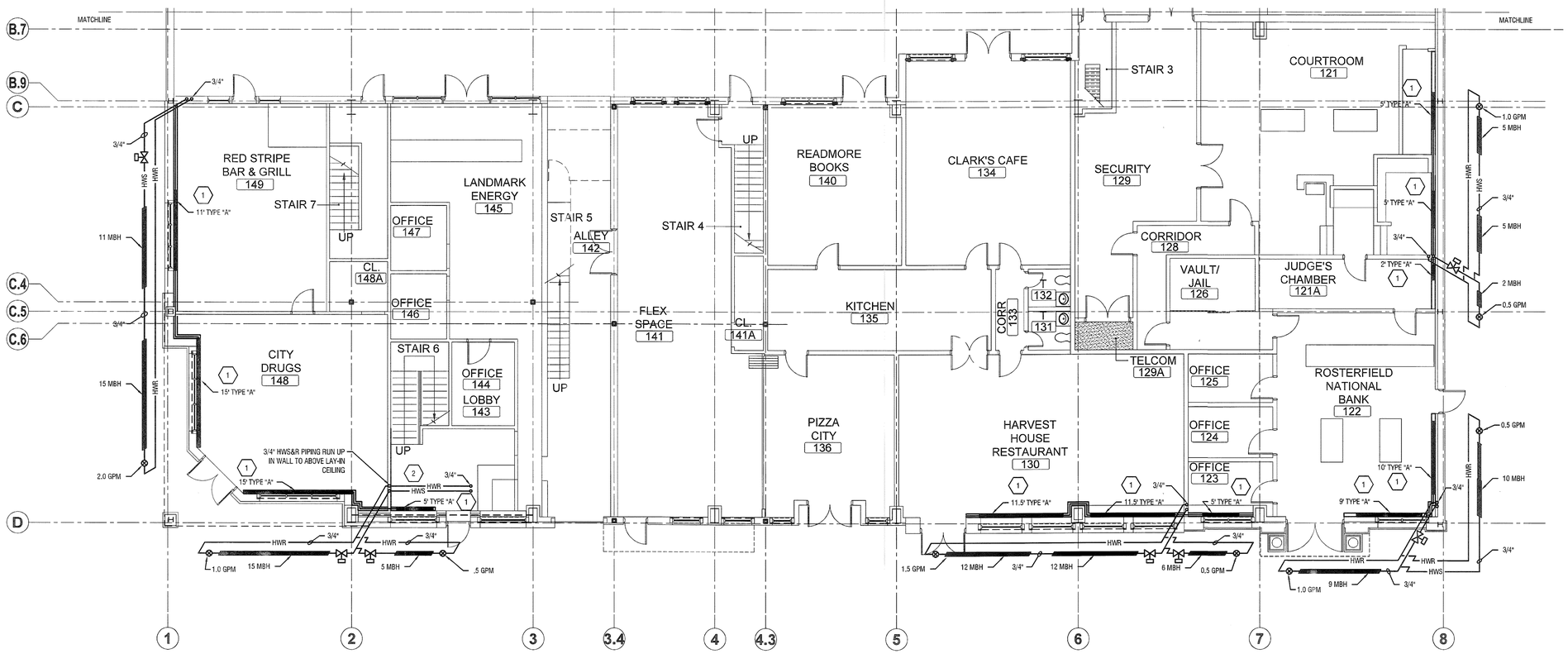

1 / M-105 FIRST FLOOR PIPNG PLAN

SCALE 1/8" = 1'-0"

N

NYS OFFICE OF GENERAL SERVICES

Serving New York

ANDREW M. CUOMO
Governor
ROANN M. DESTITO
COMMISSIONER
JAMES M. DAVIES, A.I.A.
Deputy Commissioner, Design and Construction

CONSULTANT

LABELLA Associates, P.C. | Engineering Architecture Environmental Planning

300 STATE STREET, SUITE 201
ROCHESTER, NY 14614
P: (585) 454-6110
F: (585) 454-3066
www.labellapc.com

Copyright © 2011

WARNING:

THE ALTERATION OF THIS MATERIAL IN ANY WAY, UNLESS DONE UNDER THE DIRECTION OF A COMPARABLE PROFESSIONAL, I.E. ARCHITECT FOR AN ARCHITECT, ENGINEER FOR AN ENGINEER OR LANDSCAPE ARCHITECT FOR A LANDSCAPE ARCHITECT, IS A VIOLATION OF THE NEW YORK STATE EDUCATION LAW AND/OR REGULATIONS AND IS A CLASS 'A' MISDEMEANOR.

STATE OF NEW YORK · RICHARD W. MOSS · 059923 · LICENSED PROFESSIONAL ENGINEER

CONTRACT: HVAC

TITLE: PROVIDE CITYSCAPE COMPLEX

LOCATION: STATE PREPAREDNESS TRAINING CENTER
5900 AIRPORT ROAD
ORISKANY, NY 13424

CLIENT: DIVISION OF HOMELAND SECURITY & EMERGENCY SERVICES

REVISED DRAWING 09/05/2012

MARK	DATE	DESCRIPTION
1	09/05/2012	ADDENDUM 6
	07/05/2012	FINAL SUBMISSION

PROJECT NUMBER:	44014- H
DESIGNED BY:	NKF
DRAWN BY:	NKF
FIELD CHECK:	XXXXX
APPROVED:	RWM

SHEET TITLE: SOUTH FIRST FLOOR PIPING PLAN

DRAWING NUMBER: M-105

SHEET 7 OF 19

Sep 05,2012 – 9:15am
Y:\NYSGOS\208194.10\Drawings\MEEP\NYSGOS City Scape\Views\MEEP\Mech\M1.00 – HVAC Piping\M-105 South 1st Floor Piping Plan.dwg

36x24 PLOT SHEET

BOILER SCHEDULE

No.	location	Type	Input Btu/hr	Gross Output Btu/hr	Modulation	Burner Data						Flue Size (in)	Comb. Air Size (in)	Remarks
						Draft Type	Fuel	HP	FLA	Volts	Phase			
B-1	MECHANICAL 201	CONDENSING	500,000	490,000	5:1	CATEGORY IV PVC	NG		15.5	120	1	4	4	1, 2, 3
B-2	MECHANICAL 201	CONDENSING	500,000	490,000	5:1	CATEGORY IV PVC	NG		15.5	120	1	4	4	1, 2, 3

NOTES:
1. PROVIDE FACTORY INSTALLED MOTOR STARTER.
2. DISCONNECT BY ELECTRICAL CONTRACT.
3. PROVIDE CONDENSATE DRAIN NEUTRALIZATION KIT FROM BOILER MANUFACTURER.

UNIT HEATER SCHEDULE

No.	Location	Type	CFM (High/Low)	Cap. MBH	EWT (F)	Temp Drop	GPM	P.D. (ft)	HP (Watts)	RPM	Mounting	Remarks
UH-1	LIGHT LOCK	HORIZONTAL	550/480	20.9	180	30	2.7	.09	(25)	1550	HUNG FROM STRUCTURE ABOVE, 8' AFF	1
UH-2	MAIN STREET	HORIZONTAL	1100/950	47	180	30	5.3	.23	1/20	1000	HUNG FROM STRUCTURE ABOVE, 24' AFF	1
UH-3	SIMUNITIONS	HORIZONTAL	145/110	6.4	180	30	.8	.8	(16)	1550	HUNG FROM STRUCTURE ABOVE, 8' AFF	1

REMARK CODES:
1. CAPACITY BASED ON 180°F SUPPLY WATER TEMPERATURE, 55°F RETURN AIR TEMPERATURE.

DIFFUSER SCHEDULE

No.	Neck Size	Face Size	Outlet Size	Matl	Face	Mounting	Pattern	Damper	Accessories	Remarks	Finish
A	6"	24"x24"	24"x24"	ST	SQ	LAY-IN	4-WAY	NONE	NONE	NONE	W-E
B	8"	24"x24"	24"x24"	ST	SQ	LAY-IN	4-WAY	NONE	NONE	NONE	W-E
C	12"	24"x24"	24"x24"	ST	SQ	LAY-IN	4-WAY	NONE	NONE	NONE	W-E
D	6"	7-1/2"	2-15/16"	AL	RD	SURFACE	ADJUSTABLE	YES	DUCT ADAPTOR	NONE	ANODIZED

FINNED TUBE SCHEDULE

Type	Pipe Size	Fin Size	Fins /ft.	Cap. Btuh @ 165 AWT	Tiers High	Enclosure Depth	Cover Height	Mount Height	Cover Style	Temp. Drop	Dampers Req'd	Cover Finish	Remarks
A	3/4	4 1/4 X 3 5/8	50	1020	1	5 5/16	18	22	SECURITY GRADE, SLOPE TOP, PARTIALLY PERFORATED	30	NO	STANDARD	

MAKE-UP AIR UNIT SCHEDULE

No.	Service	Location	Supply Fan						Exhaust Fan						Heating Section							Electric	FLA	MCA	MOP	HEAT RECOVERY DEVICE							
			CFM	Quantity	Type	Control	ESP/TSP	HP	CFM	Quantity	Type	Control	ESP/TSP	HP	Input	Output	Heat Source	Model	Quantity	EAT deg F	LAT deg F					Supply EAT (deg F db/wb)	Supply LAT (deg F db/wb)	Type	Size	HP	Frost Control	Remarks
MAU-1	MAIN STREET	Exterior	23000	2	Plug	VFD	1.5/3.6	15	23000	2	Plug	VFD	1.5/3.4	15	1940	1550	NAT GAS	HMA 350	6	27.6	90	208/3/60	-	-	-	-5	27.59	wheel	20	1	VFD	

PUMP SCHEDULE

No.	Service	GPM	Head (ft)	HP (Watts)	RPM	Type	Electric Data	FLA (Amps)	Effic. %	Remarks
P-1	HOT WATER	75	50	3.0	1750	IN-LINE	208/3	7.8	57.7	
P-2	HOT WATER	75	50	3.0	1750	IN-LINE	208/3	7.8	57.7	STANDBY

NOTES:
1. PROVIDE VFD

REGISTER AND GRILLE SCHEDULE

No.	Duct Size	Matl	Face	Pattern	Damper	Mounting	Access.	Finish	Use	Remarks
1	22"x10"	ST	H-S	S-D	NONE	LAY-IN	NONE	W-E	RETURN	3/4" BLADE SPACING 35 DEG. DEFL.
2	22"x22"	ST	H-S	S-D	NONE	LAY-IN	NONE	W-E	TRANSFER	3/4" BLADE SPACING 35 DEG. DEFL.
3	18"x12"	ST	H-S	S-D	NONE	DUCT	NONE	W-E	EXHAUST	3/4" BLADE SPACING 35 DEG. DEFL.
4	10"x6"	ST	H-S	S-D	NONE	DUCT	NONE	W-E	SUPPLY	3/4" BLADE SPACING 35 DEG. DEFL.
5	12"x8"	ST	H-S	S-D	NONE	DUCT	NONE	W-E	RETURN	3/4" BLADE SPACING 35 DEG. DEFL.
6	18"x8"	ST	H-S	S-D	0-B	DUCT	NONE	W-E	SUPPLY	3/4" BLADE SPACING 35 DEG. DEFL.
7	18"x18"	ST	H-S	S-D	NONE	SURF. MTD.	NONE	W-E	EXH./INTAKE	1/2" BLADE SPACING 38 DEG. DEFL.
8	24"x42"	ST	H-S	S-D	NONE	SURF. MTD.	NONE	W-E	EXH./INTAKE	1/2" BLADE SPACING 38 DEG. DEFL.
9	24"x48"	ST	H-S	S-D	NONE	SURF. MTD.	NONE	W-E	EXH./INTAKE	1/2" BLADE SPACING 38 DEG. DEFL.
10	20"x30"	ST	H-S	S-D	NONE	SURF. MTD.	NONE	W-E	EXH./INTAKE	1/2" BLADE SPACING 38 DEG. DEFL.
11	24"x18"	ST	H-S	S-D	NONE	SURF. MTD.	NONE	W-E	EXH./INTAKE	1/2" BLADE SPACING 38 DEG. DEFL.
12	24"x24"	ST	H-S	S-D	NONE	SURF. MTD.	NONE	W-E	EXH./INTAKE	1/2" BLADE SPACING 38 DEG. DEFL.
13	12"x30"	ST	H-S	S-D	NONE	SURF. MTD.	NONE	W-E	EXH./INTAKE	1/2" BLADE SPACING 38 DEG. DEFL.
14	30"X24"	ST	H-S	S-D	NONE	SURF. MTD.	NONE	W-E	EXH./INTAKE	1/2" BLADE SPACING 38 DEG. DEFL.

NOTES:
1. SURFACE MOUNT GRILLE TO GYP. BOARD CEILING BY FASTENING GRILLE TO DUCTWORK. SEE DETAIL 2/M500.

VARIABLE REFRIGERANT VOLUME SYSTEM HEATPUMP (DX) SCHEDULE

Plan Code	Location Served	Cooling Cap. (MBH)	Heating Cap. (MBH)	INDOOR UNIT								Refr. Type	Refg Pipe - Gas (in)	Refg Pipe - Liquid (in)	Outdoor Unit				Remarks
				CFM	E.S.P. (in WG)	Weight (lb)	Power	Amps (Cool/Heat)	kW (Cool/Heat)	Fan Motor kW					Power	Max Fuse	MCA	Weight (lbs)	
HP-1	BREAK ROOM 100	18	20	638	NA	64	208/1/60	.36/.29	.05/.04	.050	R410A	1/2	1/4	NA	NA	NA	NA	1,2,4	
HP-2	OFFICES 102 & 103	15	17	494	.6	58	208/1/60	.67/.58	.09/.07	.085	R410A	1/2	1/4	NA	NA	NA	NA	1,2,4,5	
HP-3	CONTROL ROOM	30	34	777	NA	64	208/1/60	.51/.43	.07/.06	.050	R410A	5/8	3/8	NA	NA	NA	NA	1,2,4,5	
HP-4	CONTROL ROOM	30	34	777	NA	64	208/1/60	.51/.43	.07/.06	.050	R410A	5/8	3/8	NA	NA	NA	NA	1,2,4,5	
HP-5	TRAINING ROOM 109	54	60	1483	.6	102	208/1/60	2.24/2.13	.36/.34	.244	R410A	5/8	3/8	NA	NA	NA	NA	1,2,4	
HP-6	TRAINING ROOM 111	48	54	1412	.6	93	208/1/60	2.08/1.97	.34/.32	.244	R410A	5/8	3/8	NA	NA	NA	NA	1,2,4	
HP-7	MEN & WOMEN TOILETS	48	54	1412	.6	93	208/1/60	2.08/1.97	.34/.32	.244	R410A	5/8	3/8	NA	NA	NA	NA	1,2,4	
HP-8	LOBBY & CORRIDOR	30	34	777	NA	64	208/1/60	.51/.43	.07/.06	.050	R410A	5/8	3/8	NA	NA	NA	NA	1,2,4	
CU-1	TRAINING AREA	144	160	NA	NA	NA	NA	NA	NA	NA	R410A	1-3/8	1-1/8	208/3/60	60	59	695	1,3,6	
CU-2	TRAINING AREA	144	160	NA	NA	NA	NA	NA	NA	NA	R410A	1-3/8	1-1/8	208/3/60	60	59	695	1,3,6	

REMARK CODES:
1. DISCONNECT SWITCH SHOWN ON ELECTRICAL DRAWINGS.
2. CONDENSING UNIT CU-1 & CU-2 SERVE ALL EIGHT HEAT PUMPS
3. PROVIDE CONCRETE SLAB WITH VIBRATION ISOLATION FOR CONDENSING UNITS.
4. HEAT CAPACITY IS BASED ON -4°F OUTSIDE AIR TEMPERATURE.
5. REFRIGERANT PIPING REDUCER REQUIRED FOR ALL UNITS UNDER 18000 BTUS.
6. TWINNING KIT REQUIRED FOR CU-1 & CU-2.

ENERGY RECOVERY VENTILATOR SCHEDULE

No.	Location	CFM	External Static Pressure (in H2O)	Temperature Recovery Efficiency	Enthalpy Recovery Efficiency (Heating)	Enthalpy Recovery Efficiency (Cooling)	Heatexchanger Type	Electric Info	Motor HP (nominal)	Power Consumption (kW)	Minimum Circuit Capacity (amps)	Max Over Current Protection	Weight	Remarks
ERV-1	Mechanical Room	2570	1	68%	63%	48%	FIXED PLATE	208/3/60	5	2.91	31.5	45	650	1

REMARK CODES:
1. PROVIDE ERV WITH OPTIONAL DAMPERS

EXHAUST FAN SCHEDULE

Plan Code	Location	Service	Type	CFM	S.P.	Fan RPM	Fan Drive	Motor Data			Max. Sones	Weight	Notes
								HP	Volts	Phase			
SP-1	CLASS ROOMS	SMOKE PURGE	INLINE	1955	.5	1140	BELT	.5	208	3	12	179	
SP-2	MOTEL FIRST FLOOR	SMOKE PURGE	INLINE	1170	.5	2931	BELT	.75	115	1	27	114	
SP-3	COURT ROOM / BANK AREA	SMOKE PURGE	INLINE	11940	.5	973	BELT	5.0	208	3	30	489	
SP-4	RESTAURANTS AND BOOK STORE	SMOKE PURGE	INLINE	10520	.5	1135	BELT	5.0	208	3	32	438	
SP-5	FIRST FLOOR FLEX SPACE	SMOKE PURGE	INLINE	2000	.5	1660	BELT	0.8	115	1	19	168	
SP-6	LANDMARK ENERGY FIRST/SECOND FLOORS	SMOKE PURGE	INLINE	4000	.5	1599	BELT	1.5	208	3	25	238	
SP-7	CITY DRUGS/REDSTRIPE BAR	SMOKE PURGE	INLINE	2390	.5	1916	BELT	1.0	208	3	25	168	
SP-8	SECOND FLOOR MALL CORRIDOR	SMOKE PURGE	INLINE	4000	.5	897	BELT	2.0	208	3	21	451	
SP-9	MOTEL SECOND FLOOR	SMOKE PURGE	INLINE	1170	.5	2931	BELT	.75	115	1	27	114	
SP-10	SECOND FLOOR FLEX SPACE	SMOKE PURGE	INLINE	1560	.5	1810	BELT	0.5	115	1	20	142	
SP-11	SECOND FLOOR APARTMENTS	SMOKE PURGE	INLINE	1900	.5	1595	BELT	0.8	115	1	17.8	168	

AIR SEPARATOR SCHEDULE

No.	Service	GPM	Head (ft)	Conn. Size	Conn. Type	Type	Strainer	Location	Oper. Weight	Remarks
AS-1	HOT WATER	75	0.9	2-1/2"	NPT	CENTRIFUGAL	No	Rm. 201	110 Lbs.	#792 Air Vent

EXPANSION TANK SCHEDULE

No.	Service	Location	Fill Press.	Max. Press.	System Vol.	Accept. Vol	Tank Vol.	Fill Temp.	Max. Temp.	Dimensions	Remarks
ET-1	HOT WATER	Rm. 201	10 PSI	25 PSI	300	11.3	33.6	50° F	180° F	16" Ø x 45" H.	

SMOKE BOOSTER SCHEDULE

No.	Location	Service	Capacity	Static Press.	Type	HP	Electric	RPM	Housing	Remarks
SB-1	Mech. Room 201.	Northwest Zones	230 CFM	2.0" W.C.	Radial Blade	1/2	110-1-60	3450	Steel	1,2
SB-2	Stair #7 Mezzanine	Seathwest Zones	230 CFM	2.0" W.C.	Radial Blade	1/2	110-1-60	3450	Steel	1,2
SB-3	Room 140 Platform	Southeast Zones	230 CFM	2.0" W.C.	Radial Blade	1/2	110-1-60	3450	Steel	1,2
SB-4	Room 208, Closet	Northeast Zones	230 CFM	2.0" W.C.	Radial Blade	1/2	110-1-60	3450	Steel	1,2

NOTES:
1. BEARING AMCA SEAL..
2. SUPPLIED WITH ADAPTORS FOR INTERCONNECTION WITH SMOKE GENERATOR

SMOKE GENERATOR SCHEDULE

No.	Location	Service	Capacity	Consumption	Electric	Watts	Dimensions	Remarks
SM-1	Mech. Room 201.	Northwest Zones	11,300 CU. FT.	2.0L per Hour	110-1-60	2300	9'W x 21' L x 11' H	1,2,3,4
SM-2	Stair #7 Mezzanine	Seathwest Zones	11,300 CU. FT.	2.0L per Hour	110-1-60	2300	9'W x 21' L x 11' H	1,2,3,4
SM-3	Room 140 Platform	Southeast Zones	11,300 CU. FT.	2.0L per Hour	110-1-60	2300	9'W x 21' L x 11' H	1,2,3,4
SM-4	Room 208, Closet	Northeast Zones	11,300 CU. FT.	2.0L per Hour	110-1-60	2300	9'W x 21' L x 11' H	1,2,3,4

NOTES:
1. SUPPLIED WITH CONTROL PANEL AND REMOTE ZONE CONTROL.
2. 4 MINUTE WARM-UP CYCLE.
3. FOG PARTICUL SIZE OF 0.3 MICRON MINMUM.
4. PROVIDE A 25 GALLON PLASTIC REMOTE RESERVOIR FILLED WITH SOLUTION.

VAV AND CV BOX SCHEDULE

Tag	Size (in)		CFM		Static Pressure (in)		NC Levels		Remarks
	Unit	Outlet	Max.	Min.	Inlet Max.	Box Delta	Disch.	Radiated	
VAV-1SW	6"Ø	12" x 8"	390	0	1.5" W.C.	.40" W.C.	25	28	Supply air on VFD
VAV-2SW	8"Ø	12" x 10"	720	0	1.5" W.C.	.29" W.C.	27	27	Supply air on VFD
VAV-2SE	9" Ø	14" x 12"	900	0	1.5" W.C.	.30" W.C.	22	24	Supply air on VFD
VAV-MAIN ST.	7"Ø	12" x 10"	685	0	1.5" W.C.	.40" W.C.	27	27	Supply air on VFD
VAV-2NW	9"Ø	14" x 12"	920	0	1.5" W.C.	.30" W.C.	23	25	Supply air on VFD
VAV-1NE	7"Ø	12" X 10"	685	0	1.5" W.C.	.40" W.C.	27	27	Supply air on VFD

LOUVER SCHEDULE

No.	Location	Service	Size	Depth	CFM	APD (in)	FA (sqft)	Type	Remarks	Bird Screen	Matl	Finish
L-1	MECHANICAL ROOM NORTH WALL	OUTSIDE AIR	36"x30"	6.5"	2670	.07	3.87	NOTE 1	NONE	YES	AL	NOTE 2
L-2	MECHANICAL ROOM NORTH WALL	EXHAUST	24"x42"	6.5"	2670	.05	3.72	NOTE 1	NONE	YES	AL	NOTE 2
L-3	CLASS ROOM 113	TRANSFER	24"x18"	6"	1155	.09	2.05	NOTE 1	NONE	NO	AL	NOTE 2
L-4	CLASS ROOM 116	TRANSFER	24"x18"	6"	800	.09	2.05	NOTE 1	NONE	NO	AL	NOTE 2
L-5	MOTEL ROOM 119	TRANSFER	18"x18"	6"	585	.09	.7	NOTE 1	NONE	NO	AL	NOTE 2
L-6	MOTEL ROOM 120	TRANSFER	18"x18"	6"	585	.09	.7	NOTE 1	NONE	NO	AL	NOTE 2
L-7	MOTEL ROOM 209	TRANSFER	18"x18"	6"	585	.09	.7	NOTE 1	NONE	NO	AL	NOTE 2
L-8	MOTEL ROOM 210	TRANSFER	18"x18"	6"	585	.09	.7	NOTE 1	NONE	NO	AL	NOTE 2
L-9	LANDMARK ELECTRIC 1ST FLOOR	TRANSFER	24"x24"	6"	1230	.06	1.89	NOTE 1	NONE	NO	AL	NOTE 2
L-10	LANDMARK ELECTRIC 1ST FLOOR	TRANSFER	24"x18"	6"	850	.075	1.28	NOTE 1	NONE	NO	AL	NOTE 2
L-11	RED STRIPE BAR	TRANSFER	24"x24"	6"	1255	.06	1.89	NOTE 1	NONE	NO	AL	NOTE 2
L-12	LANDMARK ELECTRIC 2ND FLOOR	TRANSFER	24"x24"	6"	1000	.06	1.89	NOTE 1	NONE	NO	AL	NOTE 2
L-13	LANDMARK ELECTRIC 2ND FLOOR	TRANSFER	24"x24"	6"	1000	.06	1.89	NOTE 1	NONE	NO	AL	NOTE 2
L-14	APARTMENT 216	TRANSFER	24"x18"	6"	885	.075	1.28	NOTE 1	NONE	NO	AL	NOTE 2
L-15	APARTMENT 218	TRANSFER	24"x24"	6"	1020	.06	1.89	NOTE 1	NONE	NO	AL	NOTE 2
L-16	FLEX SPACE 141	TRANSFER	24"x18"	6"	1710	.09	2.05	NOTE 1	NONE	NO	AL	NOTE 2
L-17	FLEX SPACE 212	TRANSFER	30"x24"	6"	1995	.08	2.4	NOTE 1	NONE	NO	AL	NOTE 2
L-18	MATTS SHOE STORE 203	TRANSFER	24"x24"	6"	1000	.06	1.89	NOTE 1	NONE	NO	AL	NOTE 2
L-19	CITY TRAVEL PLANNERS 204	TRANSFER	24"x24"	6"	1000	.06	1.89	NOTE 1	NONE	NO	AL	NOTE 2
L-20	PATTYS KITCHEN CLOSET 208	TRANSFER	24"x24"	6"	1000	.06	1.89	NOTE 1	NONE	NO	AL	NOTE 2
L-21	TERRYS MENS WEAR 207	TRANSFER	24"x24"	6"	1000	.06	1.89	NOTE 1	NONE	NO	AL	NOTE 2
L-SP1	SMOKE PURGE FAN 1	EXHAUST	30"x24"	6"	1955	.08	2.4	NOTE 1	NONE	YES	AL	NOTE 2
L-SP2	SMOKE PURGE FAN 2	EXHAUST	30"x30"	6"	2175	.08	2.4	NOTE 1, 3	NONE	YES	AL	NOTE 2
L-SP3	SMOKE PURGE FAN 3	EXHAUST	72"x60"	6"	11940	.095	14.02	NOTE 1	NONE	YES	AL	NOTE 2
L-SP4	SMOKE PURGE FAN 4	EXHAUST	60"x60"	6"	10520	.095	12.14	NOTE 1	NONE	YES	AL	NOTE 2
L-SP5	SMOKE PURGE FAN 5	EXHAUST	30"x24"	6"	1710	.08	2.4	NOTE 1	NONE	YES	AL	NOTE 2
L-SP6	SMOKE PURGE FAN 6	EXHAUST	42"x30"	6"	4080	.095	4.54	NOTE 1	NONE	YES	AL	NOTE 2
L-SP7	SMOKE PURGE FAN 7	EXHAUST	30"x18"	6"	1255	.07	1.63	NOTE 1	NONE	YES	AL	NOTE 2
L-SP8	SMOKE PURGE FAN 8	EXHAUST	42"x30"	6"	4000	.09	4.54	NOTE 1	NONE	YES	AL	NOTE 2
L-SP10	SMOKE PURGE FAN 10	EXHAUST	30"x24"	6"	1955	.08	2.4	NOTE 1	NONE	YES	AL	NOTE 2
L-SP11	SMOKE PURGE FAN 11	EXHAUST	30X24	6"	1900	.07	2.4	NOTE 1	NONE	YES	AL	NOTE 2

NOTES:
1. LOUVERS ARE PROVIDED BY C CONTRACT, ALL DAMPERS ARE TO BE PROVIDED BY H CONTRACT. SCHEDULE IS PROVIDED FOR REFERENCE ONLY.
2. COLOR TO BE SELECTED BY ENGINEER IN CHARGE.
3. LOUVER IS TO BE USED AS A COMMON DISCHARGE POINT FOR SMOKE PURGE FANS SP-2& SP-9

NYS OFFICE OF GENERAL SERVICES
Serving New York
ANDREW M. CUOMO
Governor
ROANN M. DESTITO
COMMISSIONER
JAMES M. DAVIES, A.I.A.
Deputy Commissioner, Design and Construction

CONSULTANT
LABELLA Associates, P.C.
Engineering
Architecture
Environmental
Planning
300 STATE STREET, SUITE 201
ROCHESTER, NY 14614
P: (585) 454-6110
F: (585) 454-3066
www.labellapc.com

Copyright © 2011

WARNING:
THE ALTERATION OF THIS MATERIAL IN ANY WAY, UNLESS DONE UNDER THE DIRECTION OF A COMPARABLE PROFESSIONAL, I.E. ARCHITECT FOR AN ARCHITECT, ENGINEER FOR AN ENGINEER OR LANDSCAPE ARCHITECT FOR A LANDSCAPE ARCHITECT, IS A VIOLATION OF THE NEW YORK STATE EDUCATION LAW AND/OR REGULATIONS AND IS A CLASS 'A' MISDEMEANOR.

STATE OF NEW YORK · RICHARD W. MESSINA · 059923 · LICENSED PROFESSIONAL ENGINEER

CONTRACT: HVAC
TITLE: PROVIDE CITYSCAPE COMPLEX
LOCATION: STATE PREPAREDNESS TRAINING CENTER
5900 AIRPORT ROAD
ORISKANY, NY 13424
CLIENT: DIVISION OF HOMELAND SECURITY & EMERGENCY SERVICES

REVISED DRAWING
09/05/2012

MARK	DATE	DESCRIPTION
1	09/05/2012	ADDENDUM 6
	07/05/2012	FINAL SUBMISSION

PROJECT NUMBER: 44014 – H
DESIGNED BY: NKF
DRAWN BY: NKF
FIELD CHECK: XXXXX
APPROVED: RWM
SHEET TITLE: MECHANICAL SCHEDULES
DRAWING NUMBER: M–600
SHEET 18 OF 19

Sep 05,2012 – 9:16am
X:\NYSGOS\208194.10\Drawings\MEEP\NYSGOS City Scape\Views\MEEP\Mech\M6.00 – Schedules\M-600 MECHANICAL SCHEDULES.dwg
36x24 PLOT SHEET

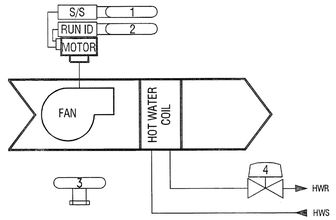

1 UNIT HEATER
M-700 NO SCALE

INPUT/OUTPUT SUMMARY TABLE	HARDWARE															
	OUTPUT (O)						INPUT (T,D,V,C.)									
	DIGITAL			ANALOG			DIGITAL				ANALOG					
SYSTEMS: UH-1-13 / POINT DESCRIPTION:	CONTROL RELAY	SOLENOID	CONTACTOR	PNEUM. TRANSDUCER	ELEC. TRANSDUCER	4-20 MA MODULE	PRESSURE SWITCH	CURRENT STATUS	LOW LIMIT	ALARM	OCCUPANCY SENSOR	TEMPERATURE	RELATIVE HUMIDITY	FEEDBACK	DIFFERENTIAL PRESSURE	FLOW	STATIC PRESSURE
1. SUP. FAN S/S	*																
2. SUP. FAN RI								*									
3. SPACE TEMPERATURE												*					
4. HOT WATER COIL					*												
5.																	

NOTES:

TYPICAL UNIT HEATER SEQUENCE OF OPERATIONS

OCCUPIED / UNOCCUPIED MODE/ OCCUPANCY SENSOR : OCCUPIED / UNOCCUPIED MODE SHALL BE SCHEDULED BY THE FMS SYSTEM.

FAN CONTROL: THE SUPPLY FAN SHALL RUN WHEN THERE IS A CALL FOR HEAT.

HEATING COIL CONTROL: WHEN IN THE OCCUPIED MODE AND THE OA TEMPERATURE IS BELOW 55°F AND THE SPACE TEMPERATURE FALLS BELOW THE SPACE HEATING SETPOINT OF 55°F (ADJ.) OPEN THE HEATING COIL CONTROL VALVE.

SAFETIES / ALARMS: WHEN ANY SENSED OUTPUT DIFFERS FROM ITS COMMAND STATE, AN ALARM SHALL BE GENERATED BY THE FMS SYSTEM.

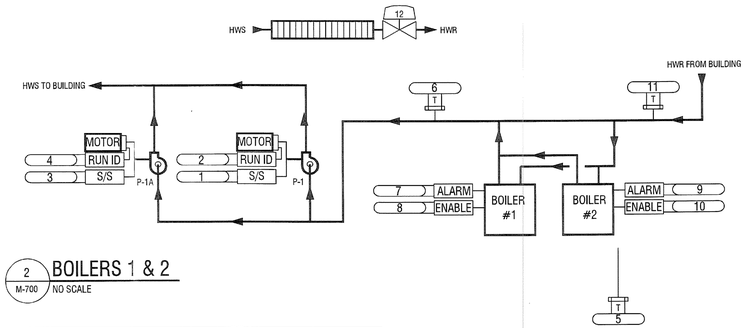

2 BOILERS 1 & 2
M-700 NO SCALE

INPUT/OUTPUT SUMMARY TABLE	HARDWARE															
	OUTPUT (O)						INPUT (T,D,V,C.)									
	DIGITAL			ANALOG			DIGITAL				ANALOG					
SYSTEM: BOILER PLANT / POINT DESCRIPTION:	CONTROL RELAY	SOLENOID	CONTACTOR	PNEUM. TRANSDUCER	ELEC. TRANSDUCER	4-20 MA MODULE	PRESSURE SWITCH	CURRENT STATUS	LOW LIMIT	ALARM	OCCUPANCY SENSOR	SWITCH	TEMPERATURE	RELATIVE HUMIDITY	FEEDBACK	POSITION	FLOW	DIFFERENTIAL PRESSURE
1. PUMP 1 START / STOP	●																	
2. PUMP 1 STATUS								●										
3. PUMP 2 START / STOP	●																	
4. PUMP 2 STATUS								●										
5. BOILER HW SUPPLY RESET TEMP.													●					
6. BOILER HW SUPPLY TEMP.													●					
7. BOILER 1 SYSTEM ALARM										●								
8. BOILER 1 ENABLE	●																	
9. BOILER 2 SYSTEM ALARM										●								
10. BOILER 2 ENABLE	●																	
11. BOILER HW RETURN TEMP.													●					
12. FIN RADIATION CONTROL VALVE																		

NOTES:

BOILER PLANT SEQUENCE OF OPERATIONS

PLANT ENABLE/DISABLE: THE BOILER CONTROL SYSTEM SHALL ENABLE THE BOILER PLANT FOR OPERATION ANY TIME THE OUTDOOR AIR TEMPERATURE IS BELOW 55°F (ADJ.).

BOILER SEQUENCING AND MODULATION: WHEN A BOILER IS ENABLED, ITS ASSOCIATED PUMP SHALL BE STARTED. ONCE FLOW IS PROVEN, THE BOILER CONTROLS SHALL BE ENABLED TO MAINTAIN THE COMMANDED FIRING RATE.

SUPPLY HOT WATER SET-POINT RESET: THE BOILER PLANT SUPPLY HOT WATER SET-POINT SHALL BE RESET BASED ON THE OUTSIDE AIR TEMPERATURE. AT 60°F OUTSIDE AIR TEMPERATURE, THE HEATING HOT WATER SET-POINT SHALL BE 140°F (ADJ.). AT 35°F OUTSIDE AIR TEMPERATURE, THE HEATING HOT WATER SET-POINT SHALL BE 180°F (ADJ.).

FINNED TUBE RADIATION: FINNED TUBE RADIATION SHALL BE CONTROLLED VIA SELF CONTAINED THERMOSTATIC CONTROL VALVES. THE THERMOSTATIC VALVES SHALL BE SET TO 55°F (ADJ)

SAFETIES / ALARMS: WHEN ANY CONTROL POINT DEVIATES FROM SET-POINT BY MORE THAN 5°F (ADJ.) AN ALARM SHALL BE GENERATED. WHEN ANY STATUS DEVIATES FROM ITS COMMANDED VALUE, AN ALARM SHALL BE GENERATED.

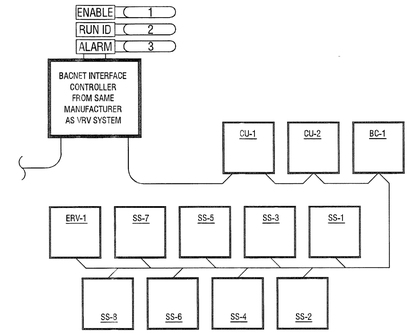

INPUT/OUTPUT SUMMARY TABLE	HARDWARE															
	OUTPUT (O)						INPUT (T,D,V,C.)									
	DIGITAL			ANALOG			DIGITAL				ANALOG					
SYSTEM: VARIABLE REFRIGERANT VOLUME HEAT PUMPS / POINT DESCRIPTION:	CONTROL RELAY	SOLENOID	CONTACTOR	PNEUM. TRANSDUCER	ELEC. TRANSDUCER	4-20 MA MODULE	PRESSURE SWITCH	CURRENT STATUS	LOW LIMIT	ALARM	OCCUPANCY SENSOR	SWITCH	TEMPERATURE	RELATIVE HUMIDITY	FEEDBACK	POSITION	FLOW	DIFFERENTIAL PRESSURE
1. VRF SYSTEM ENABLE	*																	
2. VRF SYSTEM STATUS								*										
3. VRF SYSTEM ALARM											*							

NOTES: 1. THE VARIABLE REFRIGERANT VOLUME SYSTEM SHALL BE CONTROLLED BY THE MANUFACTURERS PACKAGED CONTROLS TO MAINTAIN SPACE SET POINTS. THE FMS SHALL ENABLE & MONITOR THE SYSTEM AND DISPLAY ALARMS.

VARIABLE REFRIGERANT VOLUME HEATPUMP SEQUENCE OF OPERATIONS

SAFETIES / ALARMS: WHEN ANY CONTROL POINT DEVIATES FROM SET-POINT BY MORE THAN 5°F (ADJ.) AN ALARM SHALL BE GENERATED. WHEN ANY STATUS DEVIATES FROM ITS COMMANDED VALUE, AN ALARM SHALL BE GENERATED.

1 VARIABLE REFRIGERANT VOLUME HEAT PUMPS
M-700 NO SCALE

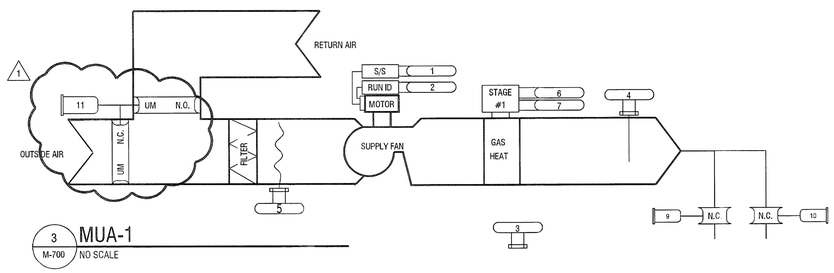

3 MUA-1
M-700 NO SCALE

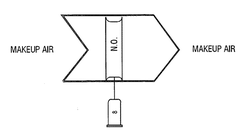

VARIABLE AIR VOLUME BOX

INPUT/OUTPUT SUMMARY TABLE	HARDWARE															
	OUTPUT (O)						INPUT (T,D,V,C.)									
	DIGITAL			ANALOG			DIGITAL				ANALOG					
SYSTEM: MUA-1 / POINT DESCRIPTION:	CONTROL RELAY	SOLENOID	CONTACTOR	PNEUM. TRANSDUCER	ELEC. TRANSDUCER	4-20 MA MODULE	PRESSURE SWITCH	CURRENT STATUS	LOW LIMIT	ALARM	OCCUPANCY SENSOR	TEMPERATURE	RELATIVE HUMIDITY	FEEDBACK	POSITION	FLOW	STATIC PRESSURE
1. SUP FAN S/S	*																
2. SUP FAN RI								*									
3. SPACE TEMPERATURE												*		*			
4. SUPPLY TEMPERATURE														*			
5. MIXED AIR TEMPERATURE														*			
6. GAS MOD					*												
7. GAS ENABLE	*																
8. VAV DAMPER					*												
9. MOTOR DAMPER					*												
10. MOTOR DAMPER					*												
11. MIXING BOX					*												

NOTES: 1.

MUA- 1 SEQUENCE OF OPERATIONS

OCCUPIED / UNOCCUPIED MODE/ OCCUPANCY SENSOR : OCCUPIED / UNOCCUPIED MODE SHALL BE SCHEDULED BY THE FMS SYSTEM. IN THE UNOCCUPIED MODE THE OUTSIDE AIR DAMPERS SHALL CLOSE, AND THE SPACE HEATING SET-POINT SHALL BE RESET 2°F (ADJ.) LOWER THAN THE OCCUPIED SET-POINT.

FAN CONTROL: THE SUPPLY FAN SHALL RUN CONTINUOUSLY DURING THE OCCUPIED MODE. THE SUPPLY FAN SHALL CYCLE ON AND OFF AS REQUIRED DURING THE UNOCCUPIED MODE TO MAINTAIN THE UNOCCUPIED HEATING SPACE SET-POINT.

VAV CONTROL: THE VAV BOX WILL REMAIN IN THE FULL OPEN POSITION UNTIL A SIGNAL FROM THE THEATRICAL SMOKE SYSTEM CALLS FOR THE VAV BOX TO CLOSE.

MOTORIZED DAMPERS: THE MOTORIZED DAMPERS WILL REMAIN CLOSED UNTIL THE THEATRICAL SMOKE PURGE SYSTEM IS ACTIVATED. THE DAMPERS WILL THEN OPEN ALLOWING MAKE UP AIR TO FILL INTO MAIN STREET.

ECONOMIZER MODE: WHEN THE OUTSIDE AIR TEMPERATURE IS BELOW THE ECONOMIZER SET-POINT OF 55°F (ADJ.) THE OUTSIDE AND RETURN AIR DAMPERS SHALL MODULATE TO MAINTAIN SPACE TEMPERATURE SET-POINT.

SAFETIES / ALARMS: IF THE DISCHARGE AIR TEMPERATURE FALLS BELOW 40°F (ADJ.), THE UNIT SHALL BE COMMANDED INTO THE UNOCCUPIED MODE, AND AN ALARM SHALL BE GENERATED BY THE FMS SYSTEM. WHEN ANY CONTROL POINT DEVIATES FROM SET-POINT BY MORE THAN 5°F (ADJ.), AN ALARM SHALL BE GENERATED BY THE FMS SYSTEM. WHEN ANY SENSED OUTPUT DIFFERS FROM ITS COMMANDED STATE, AN ALARM SHALL BE GENERATED BY THE FMS SYSTEM. AN ALARM SHALL BE GENERATED BY THE FMS SYSTEM IF THE ROOM STATIC PRESSURE CONTROL IS UNABLE TO MAINTAIN ITS SET-POINT.

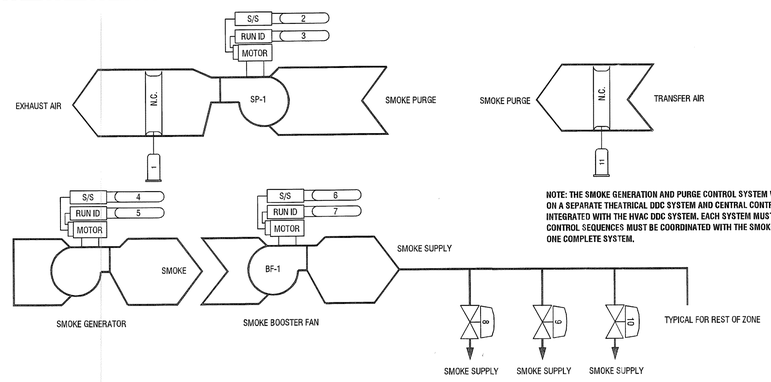

NOTE: THE SMOKE GENERATION AND PURGE CONTROL SYSTEM WILL BE PROGRAMMED AND SET-UP ON A SEPARATE THEATRICAL DDC SYSTEM AND CENTRAL CONTROL COMPUTER. THIS MUST NOT BE INTEGRATED WITH THE HVAC DDC SYSTEM. EACH SYSTEM MUST BE A STAND ALONE SYSTEM. ALL CONTROL SEQUENCES MUST BE COORDINATED WITH THE SMOKE GENERATOR MANUFACTURER FOR ONE COMPLETE SYSTEM.

1 THEATRICAL SMOKE GENERATION AND PURGE
M-700 NO SCALE

INPUT/OUTPUT SUMMARY TABLE	HARDWARE															
	OUTPUT (O)						INPUT (T,D,V,C.)									
	DIGITAL			ANALOG			DIGITAL				ANALOG					
SYSTEM:THEATRICAL SMOKE GENERATION AND PURGE / POINT DESCRIPTION:	CONTROL RELAY	SOLENOID	CONTACTOR	PNEUM. TRANSDUCER	ELEC. TRANSDUCER	4-20 MA MODULE	PRESSURE SWITCH	CURRENT STATUS	LOW LIMIT	ALARM	OCCUPANCY SENSOR	SWITCH	TEMPERATURE	RELATIVE HUMIDITY	FEEDBACK	POSITION	FLOW	STATIC PRESSURE
1. SMOKE PURGE DAMPER					●													
2. SMOKE PURGE FAN START / STOP	●																	
3. SMOKE PURGE FAN STATUS								●										
4. SMOKE GENERATOR START / STOP	●																	
5. SMOKE GENERATOR STATUS								●										
6. BOOSTER FAN START / STOP	●																	
7. BOOSTER FAN STATUS								●										
8. SMOKE CONTROL VALVE					●													
9. SMOKE CONTROL VALVE					●													
10. SMOKE CONTROL VALVE					●													
11. OUTSIDE AIR DAMPER					●													

NOTES:

THEATRICAL SMOKE GENERATION AND PURGE

SMOKE GENERATOR WARM UP : UPON INPUT FROM THE OPERATOR, THE FMS SHALL START THE SMOKE GENERATOR WARM UP SEQUENCE.

FAN CONTROL: THE SMOKE BOOSTER AND SMOKE PURGE FANS SHALL CYCLE ON AND OFF BASED UPON INPUT FROM THE OPERATOR.

DAMPER CONTROL: WHEN THE SMOKE PURGE FAN IS OFF, THE OUTSIDE AND EXHAUST AIR DAMPERS SHALL BE CLOSED. WHEN THE SMOKE PURGE FAN IS ON, THE TRANSFER AIR AND SMOKE PURGE DAMPERS SHALL BE FULLY OPEN.

SAFETIES / ALARMS: WHEN ANY SENSED OUTPUT DIFFERS FROM ITS COMMANDED STATE, AN ALARM SHALL BE GENERATED BY THE FMS SYSTEM.

SMOKE GENERATOR SEQUENCE OF OPERATIONS:

UPON A CALL FROM THE OPERATOR, THE FMS SHALL START THE SMOKE GENERATOR WARM UP SEQUENCE THAT HAS A FIXED DURATION OF 15 MIN. (ADJ). ONCE THE SYSTEM IS UP TO TEMPERATURE, THE SMOKE BOOSTER FAN AND ASSOCIATED SMOKE ZONE PURGE FANS SHALL BE ENABLED. UPON A CALL FROM THE OPERATOR, THE INDIVIDUAL ZONE CONTROL VALVE WILL OPEN, AND THE BOOSTER FAN WILL START, ALLOWING SMOKE TO ENTER THE ZONE. THE CONTROL VALVE WILL REMAIN OPEN UNTIL THE OPERATOR CALLS FOR THE VALVE TO CLOSE. THE BOOSTER FAN WILL CONTINUE TO RUN AND THE SMOKE VALVE REMAIN OPEN DURING A TIMED DUCT PURGE PERIOD OF 5 MIN (ADJ). AFTER TIMEOUT, THE BOOSTER FAN WILL SHUTDOWN AND THE SMOKE SUPPLY VALVE WILL CLOSE.

SMOKE PURGE SEQUENCE OF OPERATIONS:

UPON A CALL FROM THE OPERATOR TO CLOSE THE SMOKE SUPPLY VALVE, THE SMOKE PURGE FAN WILL ENERGIZE AND THE ASSOCIATED DAMPERS WILL OPEN. THE FAN SHALL REMAIN ENERGIZED UNTIL THE OPERATOR CALLS FOR THE FAN TO SHUT OFF.

NYS OFFICE OF GENERAL SERVICES
Serving New York
ANDREW M. CUOMO
Governor
ROANN M. DESTITO
COMMISSIONER
JAMES M. DAVIES, A.I.A.
Deputy Commissioner, Design and Construction

CONSULTANT
LABELLA Associates, P.C.
Engineering Architecture Environmental Planning
300 STATE STREET, SUITE 201
ROCHESTER, NY 14614
P: (585) 454-6110
F: (585) 454-3066
www.labellapc.com

Copyright © 2011

WARNING:
THE ALTERATION OF THIS MATERIAL IN ANY WAY, UNLESS DONE UNDER THE DIRECTION OF A COMPARABLE PROFESSIONAL, I.E. ARCHITECT FOR AN ARCHITECT, ENGINEER FOR AN ENGINEER OR LANDSCAPE ARCHITECT FOR A LANDSCAPE ARCHITECT, IS A VIOLATION OF THE NEW YORK STATE EDUCATION LAW AND/OR REGULATIONS AND IS A CLASS "A" MISDEMEANOR.

STATE OF NEW YORK · RICHARD W. MAY · 059923 · LICENSED PROFESSIONAL ENGINEER

CONTRACT:

TITLE: PROVIDE CITYSCAPE COMPLEX

LOCATION: STATE PREPAREDNESS TRAINING CENTER
5900 AIRPORT ROAD
ORISKANY, NY 13424

CLIENT: DIVISION OF HOMELAND SECURITY & EMERGENCY SERVICES

REVISED DRAWING 09/05/2012

MARK	DATE	DESCRIPTION
1	09/05/2012	ADDENDUM 6
	07/05/2012	FINAL SUBMISSION

PROJECT NUMBER:	44014 –
DESIGNED BY:	NKF
DRAWN BY:	NKF
FIELD CHECK:	XXXXX
APPROVED:	RWM

SHEET TITLE: MECHANICAL DETAILS

DRAWING NUMBER: M–700

SHEET 19 OF 19

Sep 05,2012 – 9:17am
Y:\NYSOGS\208194.10\Drawings\MEEP\NYSOGS City Scape\Views\MEEP\Mech\M7.00 – Controls\M-700 MECHANICAL CONTROLS.dwg
36x24 PLOT SHEET

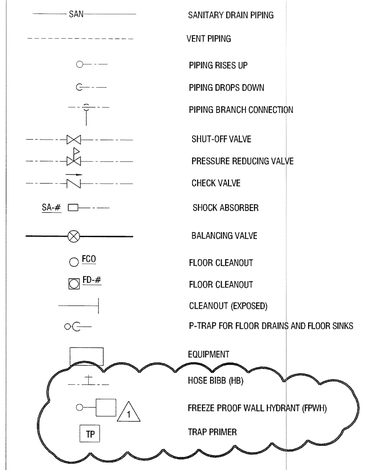

CLG	CEILING
CO	CLEAN OUT
CONN	CONNECTION
CW	COLD WATER
CC	CONSTRUCTION CONTRACTOR
-	-
DB	DRAIN BOX
DEG	DEGREE
DF	DRINKING FOUNTAIN
DIA	DIAMETER
DN	DOWN
DRS	DARK ROOM DOUBLE BOWL SINK
DCW	DOMESTIC COLD WATER
DHW	DOMESTIC HOT WATER
DCWR	DOMESTIC HOT WATER RECIRCULATING
DWG	DRAWING
DWH	DOMESTIC WATER HEATER
-	-
(E)	EXISTING
EA	EACH
ELEV	ELEVATION
ENT	ENTERING
EQ	EQUAL
EQUIP	EQUIPMENT
EQUIV	EQUIVALENT
-	-
°F	DEGREES FAHRENHEIT
FAI	FRESH AIR INTAKE
FD	FLOOR DRAIN
FIN	FINISHED
FL	FLOOR
FLA	FULL LOAD AMPS
FPWH	FREEZE PROOF WALL HYDRANT
FT	FEET
-	-
GA	GAUGE
GALV	GALVANIZED
GPD	GALLONS PER DAY
GPH	GALLONS PER HOUR
GPM	GALLONS PER MINUTE
-	-
HT	HEIGHT
HB	HOSE BIBB
HD	HEAD (SEE SCHEDULES)
HP	HORSE POWER
HR	HOSE REEL
HTR	HEATER
-	-
ID	INTERNAL DIAMETER
INCL	INCLUDING
INV	INVERT
-	-
K	TYPE OF COPPER TUBING
KW	KILOWATT
-	-
LAV	LAVATORY
-	-
HC	HVAC CONTRACTOR
MED	MEDIUM
MFR	MANUFACTURER
MISC	MISCELLANEOUS
MIN	MINIMUM
MSS	MOP SERVICE SINK
MTD	MOUNTED
-	-
NC	NORMALLY CLOSED
NH	NO HUB
No	NUMBER
NO	NORMALLY OPEN
NTS	NOT TO SCALE

PH	PHASE
PIV	POST INDICATOR VALVE
POS	POSITIVE
PRESS	PRESSURE
PS	PRESSURE SWITCH
PSI	POUNDS PER SQUARE INCH
PSIG	POUNDS PER SQUARE INCH GAUGE
PSIA	POUNDS PER SQUARE INCH ABSOLUTE
PT	PRESSURE TRANSMITTER
PV	PLUG VALVE
PVC	POLYVINYL CHLORIDE
PVS	POLYVINYL COATED STEEL
-	-
QUAN	QUANTITY
-	-
RD	ROOF DRAIN
REL	RELIEF
REQD	REQUIRED
RL	RAIN LEADER
RM	ROOM
RP	RECIRCULATION PUMP
RPM	REVOLUTIONS PER MINUTE
-	-
SA	SHOCK ABSORBER
SCH	SCHEDULE
SCHEM	SCHEMATIC
SK	STAINLESS STEEL SINK
S/S	SERVICE SINK
SPEC	SPECIFICATION
SPS	SUMP PUMP SYSTEM
SQ	SQUARE
SS	STAINLESS STEEL
SST	SUPPORT STEEL
STD	STANDARD
STL	STEEL
STR	STRUCTURAL
SUP	SUPPLY
SYS	SYSTEM
S/SHO	SAFETY SHOWER
-	-
TP	TRAP PRIMER
TYP	TYPICAL
-	-
UR	URINAL
-	-
VB	VACUUM BREAKER
VS	VIVARIUM SINK
VTR	VENT THRU ROOF
-	-
W	WIDTH
W/	WITH
-	-
W/O	WITHOUT
WC	WATER CLOSET
WM	WATER METER
-	-
XRD	X-RAY DEVELOPER CABINET

C. PROVIDE ALL WORK IN COMPLIANCE WITH ALL LOCAL, STATE AND FEDERAL CODES. OBTAIN ALL REQUIRED PERMITS.

D. PROVIDE ALL REQUIRED EXCAVATION, BACKFILL AND COMPACTION FOR ALL UNDERGROUND WORK.

E. FIELD VERIFY EXACT LOCATION, DEPTH, COMPOSITION AND CONDITION OF ALL PIPING, VALVES AND SYSTEMS AS REQUIRED FOR WORK OF THE CONTRACT.

F. PROVIDE CUTTING, CORING AND PATCHING OF ALL WALLS, SLABS AND DECKS AS REQUIRED FOR WORK SHOWN. COORDINATE ALL WORK WITH OWNER AND GENERAL CONTRACTOR AND ALL TRADES.

G. PROVIDE PIPE SLEEVES FOR ALL UNDERGROUND PIPING PASSING THROUGH OR UNDER FOOTINGS, WALLS, FOUNDATION WALLS, SLABS FLOORS AND/OR UNDERGROUND STRUCTURES. REFER TO THE PROJECT SPECIFICATIONS FOR ADDITIONAL REQUIREMENTS.

H. WHERE PIPING IS LOCATED OVER FOOTINGS AND/OR OTHER UNDERGROUND STRUCTURES, ROLL DOWN AS REQUIRED TO CONNECT TO SYSTEMS NOTED. PROVIDE ALL REQUIRED OFFSETS, FITTINGS AND CONNECTIONS.

I. PITCH ALL SANITARY, WASTE, AND STORM PIPING AS FOLLOWS:
1/4" PER FOOT MINIMUM DOWNWARD, IN DIRECTION OF FLOW UNLESS OTHERWISE NOTED.
VENT PIPING: 1/4" PER FOOT MINIMUM UPWARD, UNLESS OTHER WISE NOTED.

J. CONNECT TO SITE PIPING OUTSIDE BUILDING AS SHOWN. PROVIDE ALL REQUIRED OFFSETS, FITTINGS AND CONNECTIONS. FIELD VERIFY EXACT LOCATION, DEPTH AND COMPOSITION OF SITE SERVICES AND COORDINATE ALL WORK WITH SITE CONTRACTOR.

K. COORDINATE ALL VENT TERMINATIONS ABOVE ROOF WITH HVAC CONTRACTOR. ALL VENT TERMINATIONS ABOVE ROOF SHALL BE A MINIMUM 25'-0" AWAY FROM ANY HVAC OUTSIDE AIR INTAKE (ROOFTOP UNIT, LOUVER, ETC.).

L. PROVIDE SINGLE HOSE BIBB WITH VACUUM BREAKER (HB) UNDER LAVATORY(S) IN ALL TOILET ROOMS WITH FLOOR DRAINS. ONE REQUIRED PER ROOM. PROVIDE TRAP PRIMERS ON ALL FLOOR DRAINS IN AREAS WITH OUT HOSE BIBBS.

M. PROVIDE BARRIER TYPE SEAL DEVICE ON ALL FLOOR DRAINS.

N. REFER TO ARCHITECTURAL DRAWINGS AND THE PROJECT SPECIFICATIONS FOR ANY PROJECT PHASING REQUIREMENTS.

P. FINISHED MAIN LEVEL FINISHED SLAB ELEVATION IS 0'-0" (434.5').

GENERAL PLUMBING NOTES

1.) THE ENTIRE PLUMBING SYSTEM SHALL BE IN ACCORDANCE WITH THE LATEST EDITION OF THE PLUMBING CODE OF NEW YORK STATE AND LOCAL PLUMBING INSPECTOR.

2.) THE EXISTING PIPING INDICATED ON THESE PLANS SHALL BE VERIFIED IN THE FIELD FOR EXACT LOCATIONS, QUANTITY, AND PIPE SIZES.

3.) THE PIPING INDICATED ON THESE PLANS ARE DIAGRAMATIC. ALL WORK SHALL BE COORDINATED WITH ALL OTHER TRADES PRIOR TO INSTALLATION. CONTRACTOR SHALL COORDINATE ROUTING OF ALL PIPING WITH EXISTING CONDITIONS AND SHALL PROVIDE ANY NECESSARY OFFSETS, REROUTING, TEES, ELBOWS, ETC. REQUIRED FOR A COMPLETE AND COORDINATED INSTALLATION.

4.) OBTAIN AND PAY ALL FEES RELATED TO PERMITTING, INSPECTIONS, TAP-ON FEES, ETC.

5.) COORDINATE ANY PLUMBING OR PIPING SYSTEM SHUTDOWN WITH THE ENGINEER IN CHARGE 48 HOURS IN ADVANCE.

6.) ALL WORK SHALL BE COORDINATED WITH THE EQUIPMENT VENDORS.

7.) COORDINATE THE INSTALLATION OF ALL UNDERSLAB PIPING WITH EXISTING STRUCTURAL FOUNDATIONS. UNDERGROUND UTILITY LOCATIONS SHALL BE VERIFIED PRIOR TO ANY WORK BEING PERFORMED. REPAIR OR REPLACE ALL PIPING NOT IN PROPER WORKING ORDER OR DAMAGED DURING INSTALLATION OF THE NEW UNDERSLAB PIPING.

8.) SUPPORT ALL PLUMBING & PIPING SYSTEMS AS REQUIRED BY THE STATE AND LOCAL CODE REQUIREMENTS, AND PER MANUFACTURER'S RECOMMENDATIONS.

9.) SEAL ALL PIPING PENETRATIONS THROUGH WALLS, OR FLOORS EQUAL THE RATING OF THE WALL OR FLOOR

10.) TEST THE PLUMBING SYSTEM AS REQUIRED BY STATE AND LOCAL CODE OR BY THE REQUIREMENTS OF THE LOCAL PLUMBING INSPECTOR.

11.) DISENFECT THE ENTIRE DOMESTIC WATER SYSTEM IN ACCORDANCE TO THE LOCAL CODE & HEALTH DEPARTMENT REQUIREMENTS.

12.) INSTALL THE BACKFLOW PREVENTION DEVICE PER STATE AND LOCAL CODE & PER AUTHORITY HAVING JURISDICTION REQUIREMENTS.

13.) ALL (VTR'S) VENT THRU ROOF PENETRATIONS INDICATED ON PLANS ARE PRELIMINARY. FINAL LOCATIONS SHALL BE COORDINATED WITH ALL TRADES. ALL VTR'S SHALL BE A MINIMUM OF 25'-0" FROM ALL FRESH AIR INTAKE OPENINGS.

ROANN M. DESTITO
COMMISSIONER
JAMES M. DAVIES, A.I.A.
Deputy Commissioner, Design and Construction

CONSULTANT

LABELLA Associates, P.C. Engineering Architecture Environmental Planning
300 STATE STREET, SUITE 201
ROCHESTER, NY 14614
P: (585) 454-6110
F: (585) 454-3066
www.labellapc.com
Copyright © 2011

WARNING:
THE ALTERATION OF THIS MATERIAL IN ANY WAY, UNLESS DONE UNDER THE DIRECTION OF A COMPARABLE PROFESSIONAL, I.E. ARCHITECT FOR AN ARCHITECT, ENGINEER FOR AN ENGINEER OR LANDSCAPE ARCHITECT FOR A LANDSCAPE ARCHITECT, IS A VIOLATION OF THE NEW YORK STATE EDUCATION LAW AND/OR REGULATIONS AND IS A CLASS "A" MISDEMEANOR.

STATE OF NEW YORK
RICHARD W. MEANING
LICENSED PROFESSIONAL ENGINEER
059923

CONTRACT:
PLUMBING

TITLE:
PROVIDE CITYSCAPE COMPLEX

LOCATION:
STATE PREPAREDNESS TRAINING CENTER
5900 AIRPORT ROAD
ORISKANY, NY 13424

CLIENT:
DIVISION OF HOMELAND SECURITY & EMERGENCY SERVICES

REVISED DRAWING 09/05/2012

MARK	DATE	DESCRIPTION
1	09/05/2012	ADDENDUM 6
	07/05/2012	FINAL SUBMISSION

PROJECT NUMBER:	44014 – P
DESIGNED BY:	DWM
DRAWN BY:	DWM
FIELD CHECK:	XXXXX
APPROVED:	RWM

SHEET TITLE:
PLUMBING SYMBOLS, LEGENDS, ABREVIATIONS

DRAWING NUMBER:
P–000

SHEET X OF X

Y:\NYSOGS\208194.10\Drawings\MEEP\NYSOGS City Scape\Views\MEEP\Plumb\P0.0G - General\P-000 Plumbing Symbols, Legends, Abreviations.dwg
9/5/2012 1:31:09 PM, Xerox2 HDLpc3
Sep 05,2012 – 1:31pm
Y:\NYSOGS\208194.10\Drawings\MEEP\NYSOGS City Scape\Views\MEEP\Plumb\P0.0G – General\P–000 Plumbing Symbols, Legends, Abreviations.dwg
36x24 PLOT SHEET

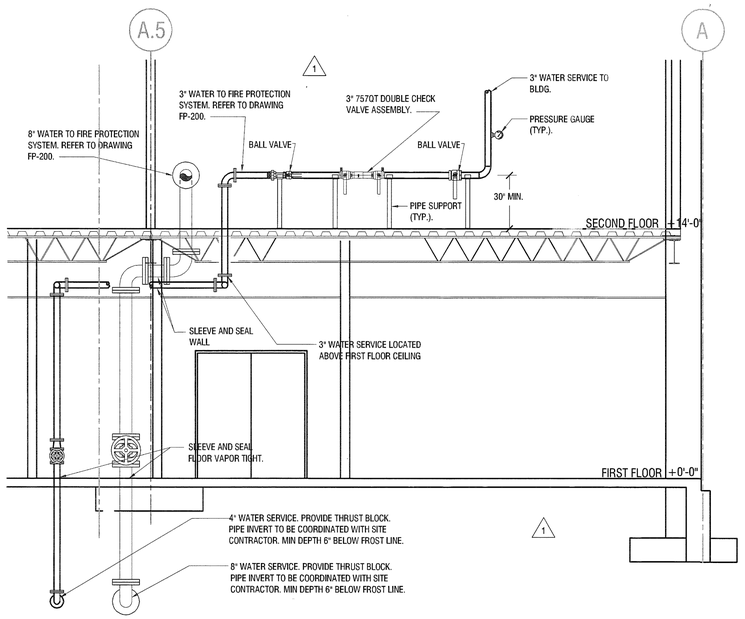

3 P-200 SECTION
SCALE 1/4" = 1'-0"

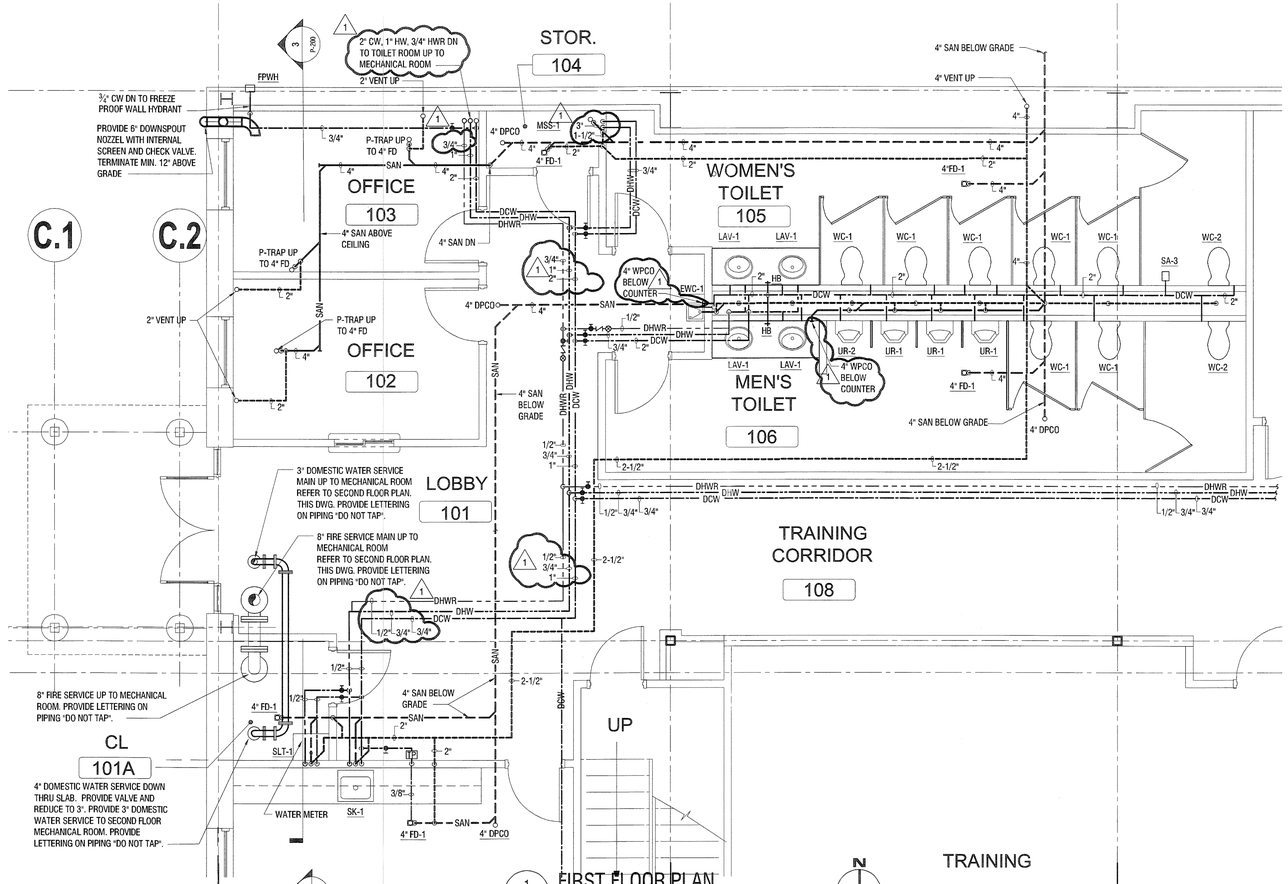

1 P-200 FIRST FLOOR PLAN
SCALE 1/4" = 1'-0"

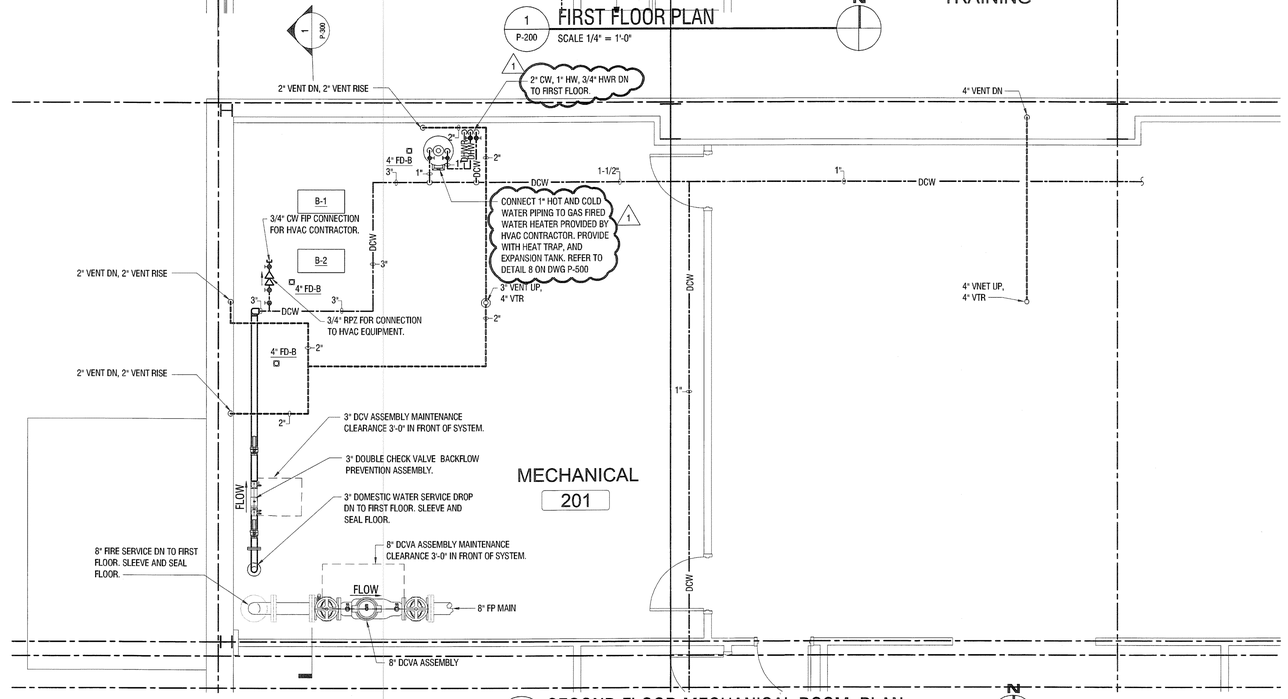

2 P-200 SECOND FLOOR MECHANICAL ROOM PLAN
SCALE 1/4" = 1'-0"

NYS OFFICE OF GENERAL SERVICES
Serving New York

ANDREW M. CUOMO
Governor
ROANN M. DESTITO
COMMISSIONER
JAMES M. DAVIES, A.I.A.
Deputy Commissioner, Design and Construction

CONSULTANT

LABELLA Associates, P.C.
Engineering Architecture Environmental Planning

300 STATE STREET, SUITE 201
ROCHESTER, NY 14614
P: (585) 454-6110
F: (585) 454-3066
www.labellapc.com
Copyright © 2011

WARNING:
THE ALTERATION OF THIS MATERIAL IN ANY WAY, UNLESS DONE UNDER THE DIRECTION OF A COMPARABLE PROFESSIONAL, I.E. ARCHITECT FOR AN ARCHITECT, ENGINEER FOR AN ENGINEER OR LANDSCAPE ARCHITECT FOR A LANDSCAPE ARCHITECT, IS A VIOLATION OF THE NEW YORK STATE EDUCATION LAW AND/OR REGULATIONS AND IS A CLASS "A" MISDEMEANOR.

STATE OF NEW YORK · RICHARD W. MCCLUNG · 059923 · LICENSED PROFESSIONAL ENGINEER

CONTRACT:
PLUMBING

TITLE:
PROVIDE CITYSCAPE COMPLEX

LOCATION:
STATE PREPAREDNESS TRAINING CENTER
5900 AIRPORT ROAD
ORISKANY, NY 13424

CLIENT:
DIVISION OF HOMELAND SECURITY & EMERGENCY SERVICES

REVISED DRAWING
09/05/2012

MARK	DATE	DESCRIPTION
1	09/05/2012	ADDENDUM 6
	07/05/2012	FINAL SUBMISSION

PROJECT NUMBER:	44014 – P
DESIGNED BY:	MTV
DRAWN BY:	MTV
FIELD CHECK:	XXXXX
APPROVED:	RWM

SHEET TITLE:
PARTIAL FLOOR PLANS PLUMBING

DRAWING NUMBER:
P–200

SHEET X OF X

Y:\NYSOGS\208194.10\Drawings\MEEP\NYSOGS City Scape\Views\MEEP\Plumb\P2.00 - Partial Floor Plumbing Plans\P-200 Partial Floor Plans Plumbing.dwg, 9/5/2012 4:14:45 PM, Xerox2 HDI.pc3
Sep 05,2012 – 4:14pm
Y:\NYSOGS\208194.10\Drawings\MEEP\NYSOGS City Scape\Views\MEEP\Plumb\P2.00 – Partial Floor Plumbing Plans\P-200 Partial Floor Plans Plumbing.dwg
36x24 PLOT SHEET

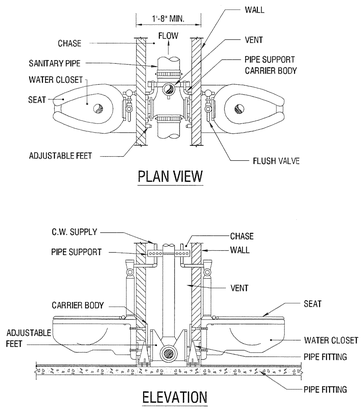

1 P-500 BACK-TO-BACK WALL HUNG WATER CLOSET DETAIL
NOT TO SCALE

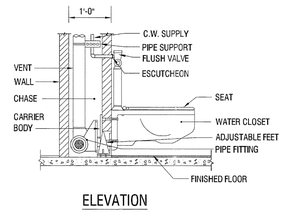

2 P-500 SINGLE WALL HUNG WATER CLOSET DETAIL
NOT TO SCALE

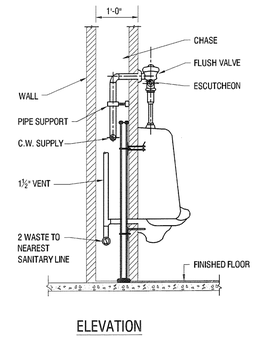

3 P-500 SINGLE WALL HUNG URINAL DETAIL
NOT TO SCALE

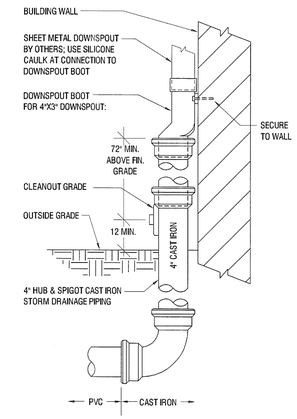

4 P-500 DOWNSPOUT BOOT DETAIL
NOT TO SCALE

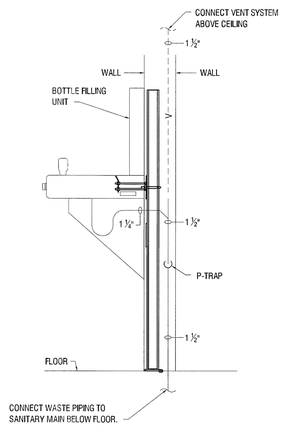

5 P-500 ELECTRIC WATER COOLER
NOT TO SCALE

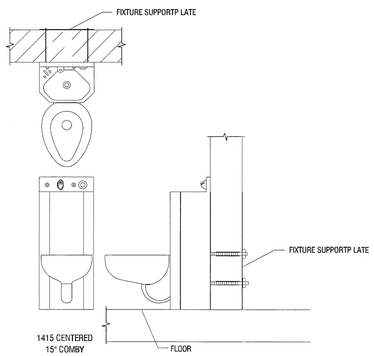

6 P-500 SIMULATED COMBINATION SECURITY FIXTURE (CSF-1) DETAIL
NOT TO SCALE

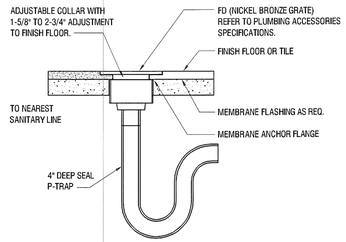

7 P-500 FLOOR DRAIN DETAIL
NOT TO SCALE
SANITARY

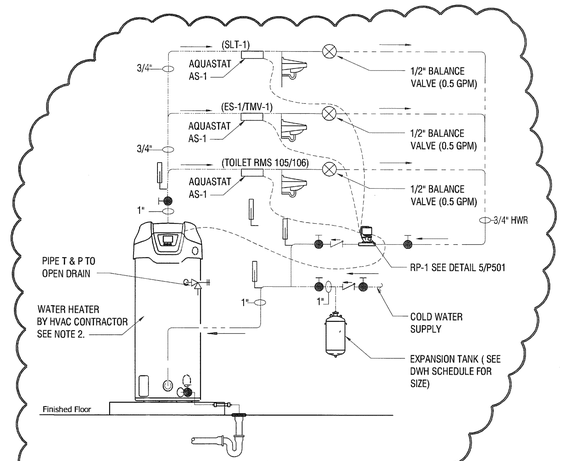

8 P-500 WATER HEATER PIPING CONNECTION DETAIL
N.T.S.

NOTE:
1. HVAC CONTRACTOR TO PROVIDE PRESSURE RELIEF VALVE, NEUTRALIZER, & READY-LINK CABLE WITH WATER HEATER.
2. WATER HEATER, GAS PIPING, AND EXHAUST AND VENTILATING PIPING TO BE PROVIDED BY HVAC CONTRACTOR.
3. DCW, DHW, AND DHWR WATER PIPING, CIRCULATING PUMPS AND EXPANSION TANK ARE TO BE PROVIDED BY PLUMBING CONTRACTOR.

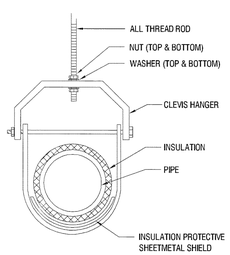

9 P-500 TYPICAL CLEVIS HANGER DETAIL
NOT TO SCALE

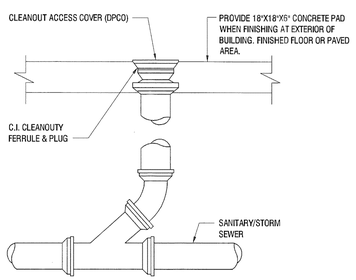

10 P-500 CLEANOUT DETAIL
NOT TO SCALE

Sep 05,2012 - 4:13pm
Y:\NYSOGS\208194.10\Drawings\MEEP\NYSOGS City Scape\Views\MEEP\Plumb\P5.00 - Details\P-500 PLUMBING DETAILS.dwg

36x24 PLOT SHEET

NYS OFFICE OF GENERAL SERVICES
Serving New York

ANDREW M. CUOMO
Governor
ROANN M. DESTITO
COMMISSIONER
JAMES M. DAVIES, A.I.A.
Deputy Commissioner, Design and Construction

CONSULTANT

LABELLA Associates, P.C.
Engineering Architecture Environmental Planning

300 STATE STREET, SUITE 201
ROCHESTER, NY 14614
P: (585) 454-6110
F: (585) 454-3066
www.labellapc.com
Copyright © 2011

WARNING:
THE ALTERATION OF THIS MATERIAL IN ANY WAY, UNLESS DONE UNDER THE DIRECTION OF A COMPARABLE PROFESSIONAL, I.E. ARCHITECT FOR AN ARCHITECT, ENGINEER FOR AN ENGINEER OR LANDSCAPE ARCHITECT FOR A LANDSCAPE ARCHITECT, IS A VIOLATION OF THE NEW YORK STATE EDUCATION LAW AND/OR REGULATIONS AND IS A CLASS 'A' MISDEMEANOR.

STATE OF NEW YORK · RICHARD W. LABELLA · LICENSED PROFESSIONAL ENGINEER · 059923

CONTRACT:
PLUMBING

TITLE:
PROVIDE CITYSCAPE COMPLEX

LOCATION:
STATE PREPAREDNESS TRAINING CENTER
5900 AIRPORT ROAD
ORISKANY, NY 13424

CLIENT:
DIVISION OF HOMELAND SECURIT & EMERGENCY SERVICES

REVISED DRAWING 09/05/2012

MARK	DATE	DESCRIPTION
1	09/05/2012	ADDENDUM 6
	07/05/2012	FINAL SUBMISSION

PROJECT NUMBER:	44014 – P
DESIGNED BY:	DWM
DRAWN BY:	DWM
FIELD CHECK:	XXXXX
APPROVED:	XXXXX

SHEET TITLE:
PLUMBING DETAILS

DRAWING NUMBER:
P–500

SHEET X OF X

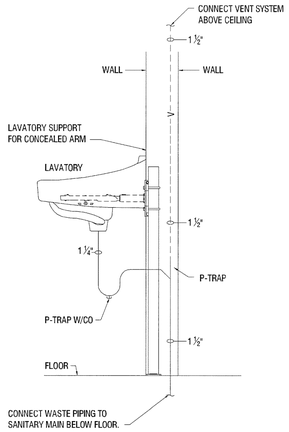

1 P-501 LAVATORY DETAIL
NOT TO SCALE

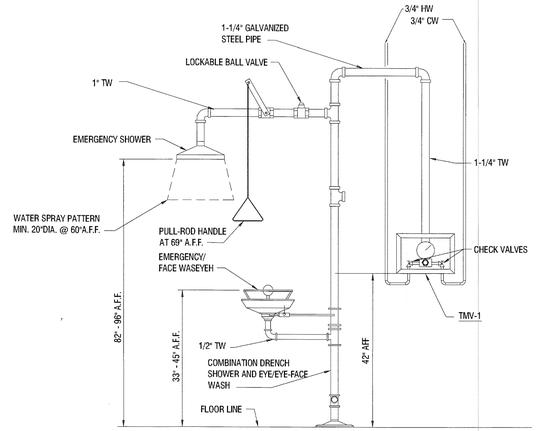

2 P-501 SAFETY SHOWER AND EYEWASH DETAIL (ES-1)
NOT TO SCALE

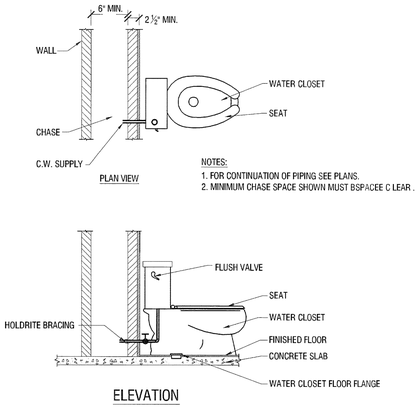

3 P-501 SIMULATION INSTALLATION OF FLOOR MOUNTED WATER CLOSET (WC-3) DETAIL
NOT TO SCALE

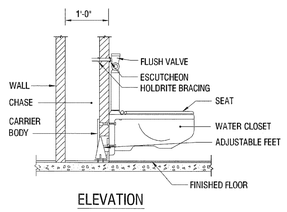

4 P-501 SIMULATION INSTALATION OF WALL HUNG WATER CLOSET (WC-4) DETAIL
NOT TO SCALE

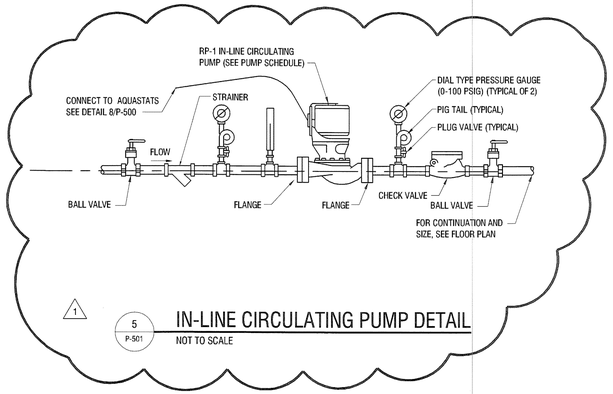

5 P-501 IN-LINE CIRCULATING PUMP DETAIL
NOT TO SCALE

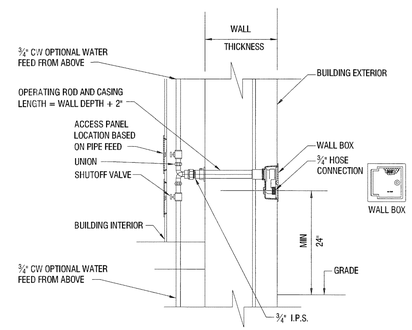

6 P-501 RECESSED WALL HYDRANT (FPWH) DETAIL
NOT TO SCALE

PIPE SIZE	"D"	"L" 1	"L" 2
4"	4.8"	9.6"	6.9"
6"	6.9"	13.8"	9.5"
8"	9.1"	18.1"	11.5"

NOTE:
CONTRACTOR TO PROVIDE RETAINER GLANDS ON ALL FITTINGS.

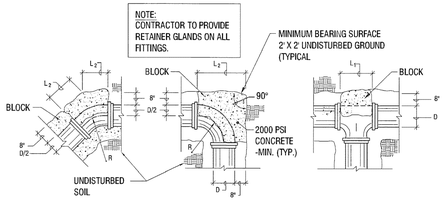

7 P-501 THRUST BLOCK DETAIL
NOT TO SCALE

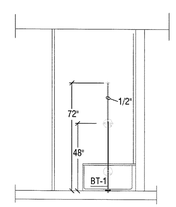

NOTES: PROVIDE BLOCKING FOR TUB, SIMULATED MIXING VALVE AND SHOWER HEAD. INSTALL TUB, DRAIN MIXING VALVE, AND SHOWER HEAD MINUS ANY SUPPLY, DRAINAGE OR VENT PINIG.

8 P-501 SIMULATED TUB AND SHOWER INSTALLATION
NOT TO SCALE

NYS OFFICE OF GENERAL SERVICES
Serving New York

ANDREW M. CUOMO
Governor
ROANN M. DESTITO
COMMISSIONER
JAMES M. DAVIES, A.I.A.
Deputy Commissioner, Design and Construction

CONSULTANT

LABELLA Associates, P.C.
Engineering Architecture Environmental Planning

300 STATE STREET, SUITE 201
ROCHESTER, NY 14614
P: (585) 454-6110
F: (585) 454-3066
www.labellapc.com
Copyright © 2011

WARNING:
THE ALTERATION OF THIS MATERIAL IN ANY WAY, UNLESS DONE UNDER THE DIRECTION OF A COMPARABLE PROFESSIONAL, I.E. ARCHITECT FOR AN ARCHITECT, ENGINEER FOR AN ENGINEER OR LANDSCAPE ARCHITECT FOR A LANDSCAPE ARCHITECT, IS A VIOLATION OF THE NEW YORK STATE EDUCATION LAW AND/OR REGULATIONS AND IS A CLASS 'A' MISDEMEANOR.

STATE OF NEW YORK · RICHARD W. NEBELUNG · 059923 · LICENSED PROFESSIONAL ENGINEER

CONTRACT:
PLUMBING

TITLE:
PROVIDE CITYSCAPE COMPLEX

LOCATION:
STATE PREPAREDNESS TRAINING CENTER
5900 AIRPORT ROAD
ORISKANY, NY 13424

CLIENT:
DIVISION OF HOMELAND SECURITY & EMERGENCY SERVICES

REVISED DRAWING 09/05/2012

MARK	DATE	DESCRIPTION
1	09/05/2012	ADDENDUM 6
	07/05/2012	FINAL SUBMISSION

PROJECT NUMBER:	44014 – P
DESIGNED BY:	MTV
DRAWN BY:	MTV
FIELD CHECK:	XXXXX
APPROVED:	RWM

SHEET TITLE:
PLUMBING DETAILS

DRAWING NUMBER:
P–501

SHEET X OF X

Y:\NYSOGS\208194.10\Drawings\MEEP\NYSOGS City Scape\Views\MEEP\Plumb\P5.00 - Details\P-501 PLUMBING DETAILS.dwg, 9/5/2012 3:28:48 PM, Xerox2 HD).pc3

Sep 05,2012 – 3:28pm
Y:\NYSOGS\208194.10\Drawings\MEEP\NYSOGS City Scape\Views\MEEP\Plumb\P5.00 – Details\P-501 PLUMBING DETAILS.dwg
36x24 PLOT SHEET

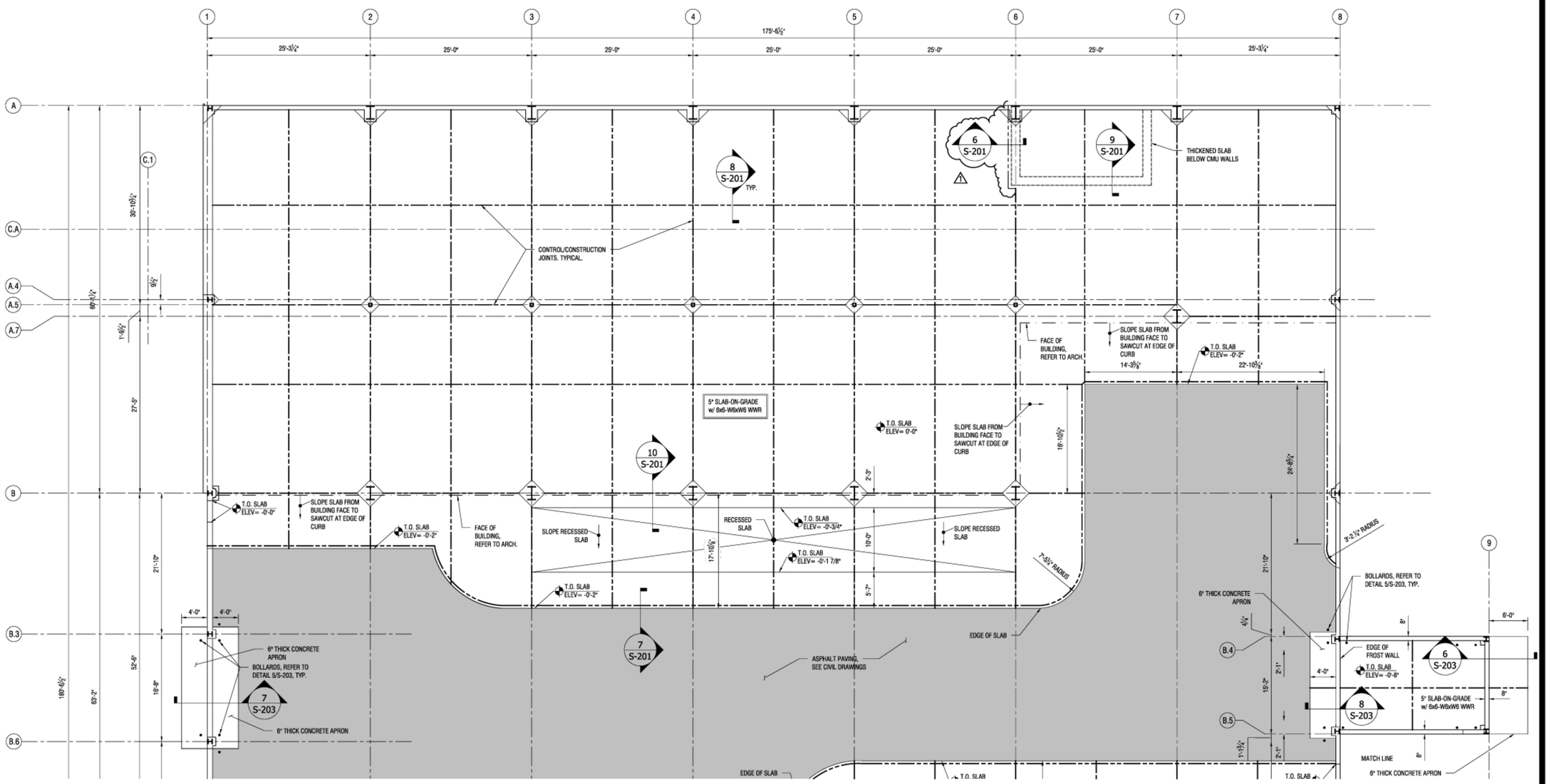

1 NORTH FIRST FLOOR SLAB PLAN

NOTES:
1. SLAB REINFORCING SHALL BE SHEET WWR.
2. CONTRACTOR SHALL SUBMIT PROPOSED CONSTRUCTION AND CONTROL JOINT LOCATIONS TO ENGINEER FOR REVIEW WITH SLAB STEEL REINFORCING SHOP DRAWING SUBMITTAL.

Scale: 1/8" = 1'-0"

N

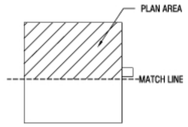

KEY PLAN

36x24 PLOT SHEET

NYS OFFICE OF GENERAL SERVICES

Serving New York

ANDREW M. CUOMO
Governor
ROANN M. DESTITO
COMMISSIONER
JAMES M. DAVIES, A.I.A.
Deputy Commissioner, Design and Construction

CONSULTANT

LABELLA Associates, P.C.
Engineering
Architecture
Environmental
Planning

300 STATE STREET, SUITE 201
ROCHESTER, NY 14614
P: (585) 454-6110
F: (585) 454-3066
www.labellapc.com
Copyright © 2012

WARNING:

THE ALTERATION OF THIS MATERIAL IN ANY WAY, UNLESS DONE UNDER THE DIRECTION OF A COMPARABLE PROFESSIONAL, I.E. ARCHITECT FOR AN ARCHITECT, ENGINEER FOR AN ENGINEER OR LANDSCAPE ARCHITECT FOR A LANDSCAPE ARCHITECT, IS A VIOLATION OF THE NEW YORK STATE EDUCATION LAW AND/OR REGULATIONS AND IS A CLASS 'A' MISDEMEANOR.

STATE OF NEW YORK
MATTHEW C. WASS
083262
LICENSED PROFESSIONAL ENGINEER

CONTRACT:
CONSTRUCTION

TITLE:
PROVIDE CITYSCAPE COMPLEX

LOCATION:
STATE PREPAREDNESS TRAINING CENTER
5900 AIRPORT ROAD
ORISKANY, NY 13424

CLIENT:
DIVISION OF HOMELAND SECURITY & EMERGENCY SERVICES

REVISED DRAWING
09/05/2012

MARK	DATE	DESCRIPTION
1	09/05/2012	ADDENDUM NO. 6
	07/05/2012	FINAL SUBMISSION

PROJECT NUMBER: 44014 – C

DESIGNED BY:
DRAWN BY:
FIELD CHECK:
APPROVED:

SHEET TITLE:
NORTH FIRST FLOOR SLAB PLAN

DRAWING NUMBER:
S–103

SHEET X OF X

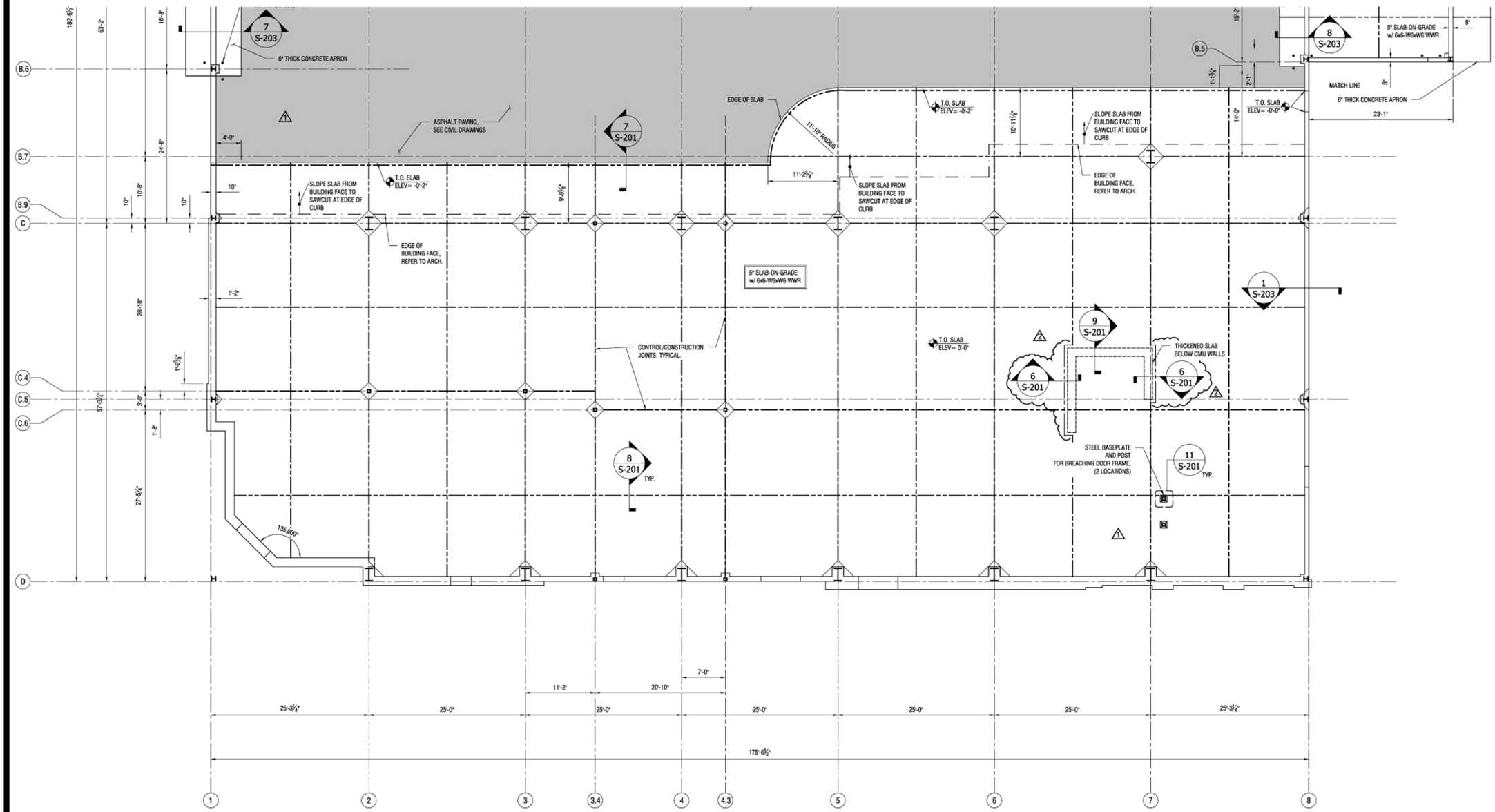

1 SOUTH FIRST FLOOR SLAB PLAN

NOTES: 1. SLAB REINFORCING SHALL BE SHEET WWR.
2. CONTRACTOR SHALL SUBMIT PROPOSED CONSTRUCTION AND CONTROL JOINT LOCATIONS TO ENGINEER FOR REVIEW WITH SLAB STEEL REINFORCING SHOP DRAWING SUBMITTAL.

Scale: 1/8" = 1'-0"

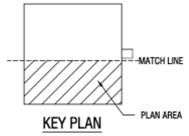

KEY PLAN

36x24 PLOT SHEET

NYS OFFICE OF GENERAL SERVICES

Serving New York

ANDREW M. CUOMO
Governor
ROANN M. DESTITO
COMMISSIONER
JAMES M. DAVIES, A.I.A.
Deputy Commissioner, Design and Construction

CONSULTANT

LABELLA Associates, P.C.
Engineering Architecture Environmental Planning
300 STATE STREET, SUITE 201
ROCHESTER, NY 14614
P: (585) 454-6110
F: (585) 454-3066
www.labellapc.com
Copyright © 2012

WARNING:
THE ALTERATION OF THIS MATERIAL IN ANY WAY, UNLESS DONE UNDER THE DIRECTION OF A COMPARABLE PROFESSIONAL, I.E. ARCHITECT FOR AN ARCHITECT, ENGINEER FOR AN ENGINEER OR LANDSCAPE ARCHITECT FOR A LANDSCAPE ARCHITECT, IS A VIOLATION OF THE NEW YORK STATE EDUCATION LAW AND/OR REGULATIONS AND IS A CLASS 'A' MISDEMEANOR.

STATE OF NEW YORK · MATTHEW C. WASS · 083262 · LICENSED PROFESSIONAL ENGINEER

CONTRACT:
CONSTRUCTION

TITLE:
PROVIDE CITYSCAPE COMPLEX

LOCATION:
STATE PREPAREDNESS TRAINING CENTER
5900 AIRPORT ROAD
ORISKANY, NY 13424

CLIENT:
DIVISION OF HOMELAND SECURITY & EMERGENCY SERVICES

REVISED DRAWING
09/05/2012

MARK	DATE	DESCRIPTION
2	09/05/2012	ADDENDUM NO. 6
1	08/15/2012	ADDENDUM NO. 2
	07/05/2012	FINAL SUBMISSION

PROJECT NUMBER: 44014 – C
DESIGNED BY:
DRAWN BY:
FIELD CHECK:
APPROVED:

SHEET TITLE:
SOUTH FIRST FLOOR SLAB PLAN

DRAWING NUMBER:
S–104

SHEET X OF X

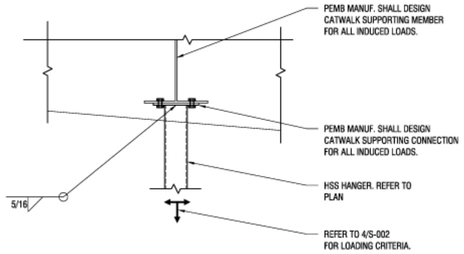

5 CATWALK CONNECTION TO PEMB SUPPORT DETAIL

Scale: 3/4" = 1'-0"

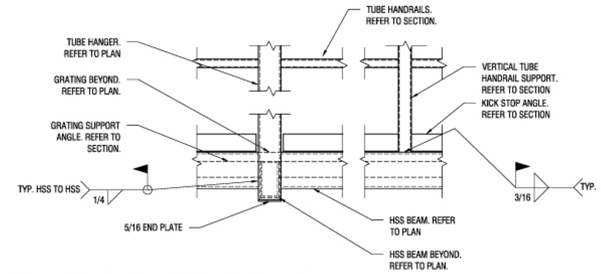

4 CATWALK CONNECTION DETAIL

Scale: 3/4" = 1'-0"

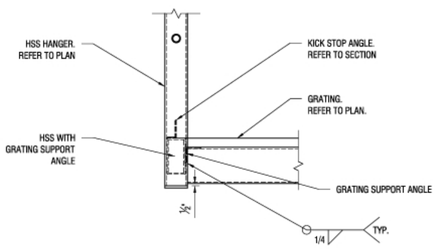

3 CATWALK MOMENT CONNECTION DETAIL

Scale: 3/4" = 1'-0"

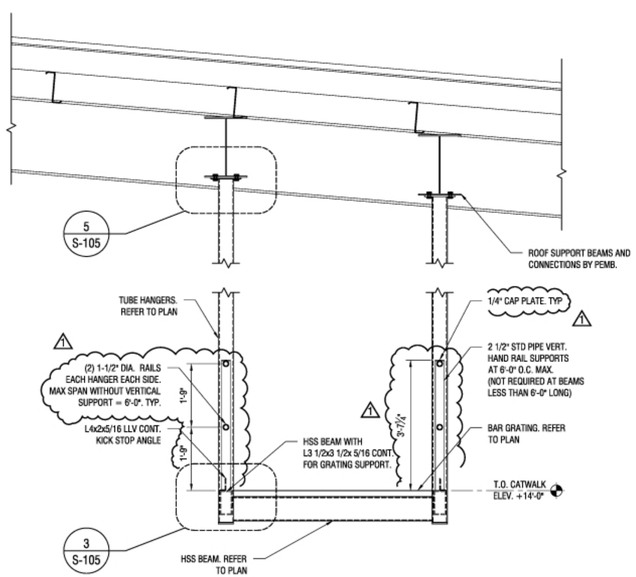

2 CATWALK FRAMING SECTION

Scale: 1/2" = 1'-0"

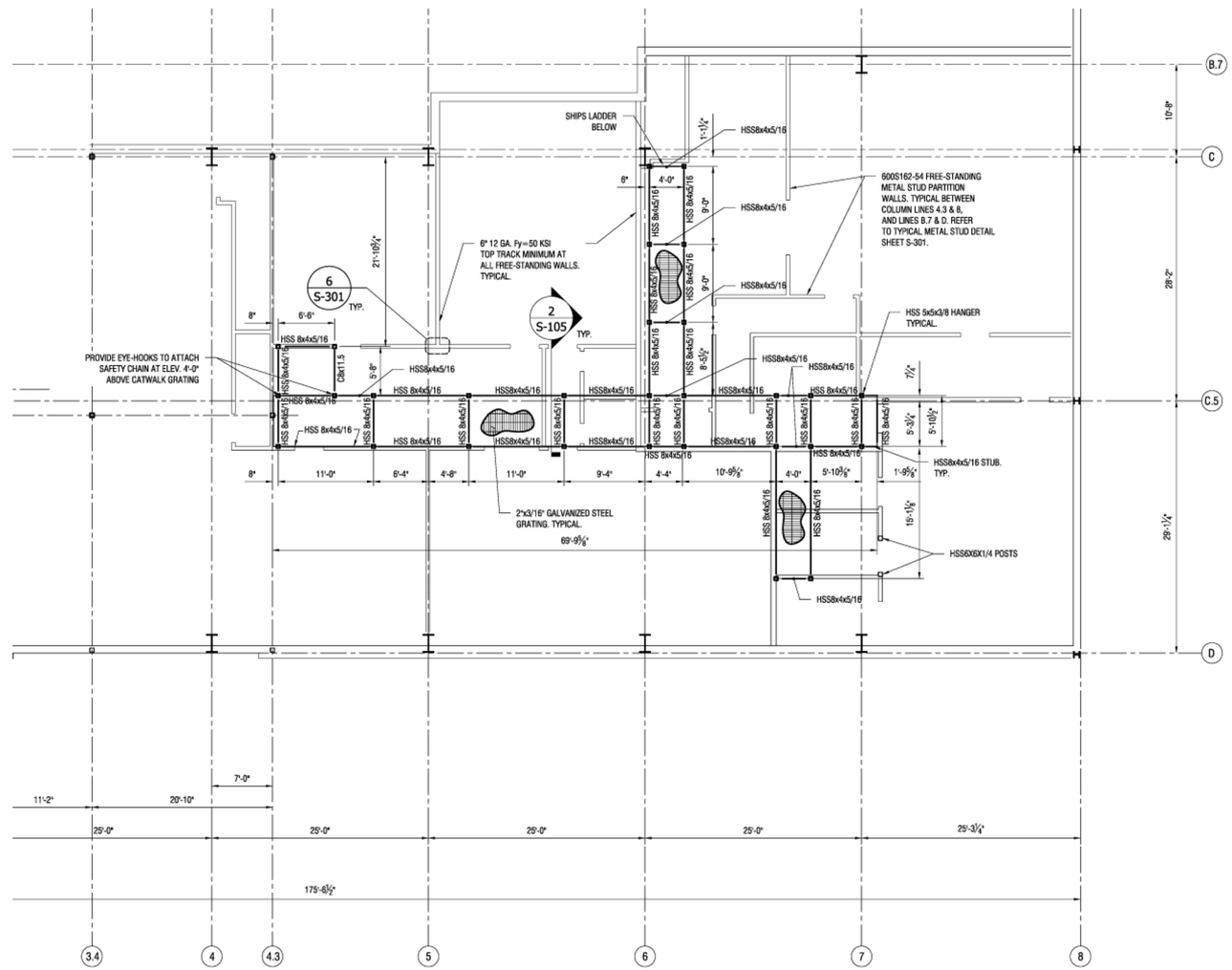

1 CATWALK FRAMING PLAN

Scale: 1/8" = 1'-0"

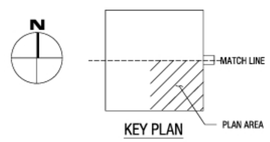

KEY PLAN

36x24 PLOT SHEET

NYS OFFICE OF GENERAL SERVICES

Serving New York

ANDREW M. CUOMO
Governor
ROANN M. DESTITO
COMMISSIONER
JAMES M. DAVIES, A.I.A.
Deputy Commissioner, Design and Construction

CONSULTANT

LABELLA Associates, P.C.
Engineering Architecture Environmental Planning
300 STATE STREET, SUITE 201
ROCHESTER, NY 14614
P: (585) 454-6110
F: (585) 454-3066
www.labellapc.com
Copyright © 2012

WARNING:
THE ALTERATION OF THIS MATERIAL IN ANY WAY, UNLESS DONE UNDER THE DIRECTION OF A COMPARABLE PROFESSIONAL, I.E. ARCHITECT FOR AN ARCHITECT, ENGINEER FOR AN ENGINEER OR LANDSCAPE ARCHITECT FOR A LANDSCAPE ARCHITECT, IS A VIOLATION OF THE NEW YORK STATE EDUCATION LAW AND/OR REGULATIONS AND IS A CLASS 'A' MISDEMEANOR.

STATE OF NEW YORK · MATTHEW C. WAGNER · 083282 · LICENSED PROFESSIONAL ENGINEER

CONTRACT:
CONSTRUCTION

TITLE:
PROVIDE CITYSCAPE COMPLEX

LOCATION:
STATE PREPAREDNESS TRAINING CENTER
5900 AIRPORT ROAD
ORISKANY, NY 13424

CLIENT:
DIVISION OF HOMELAND SECURITY & EMERGENCY SERVICES

REVISED DRAWING
09/05/2012

MARK	DATE	DESCRIPTION
1	09/05/2012	ADDENDUM NO. 6
	07/05/2012	FINAL SUBMISSION

PROJECT NUMBER: 44014 – C

DESIGNED BY:
DRAWN BY:
FIELD CHECK:
APPROVED:

SHEET TITLE:
CATWALK
PLAN AND DETAILS

DRAWING NUMBER:
S–105

SHEET X OF X

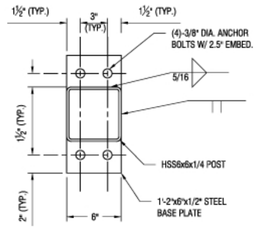

11 BASEPLATE DETAIL FOR BLAST DOOR

Scale: NTS

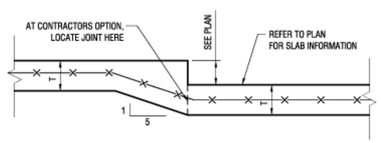

10 TYPICAL RECESSED SLAB DETAIL

Scale: NTS

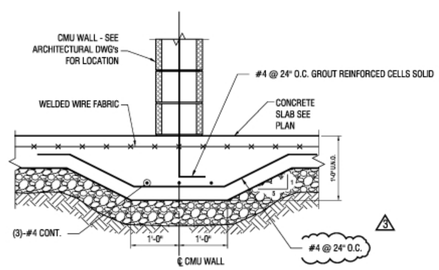

9 TYPICAL THICKENED SLAB BELOW CMU WALLS

NOT TO SCALE

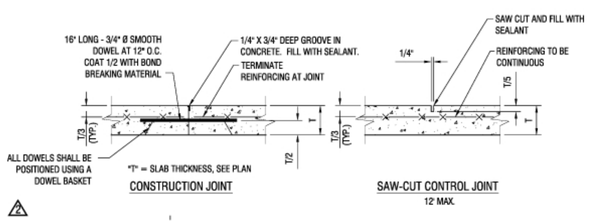

8 TYPICAL SLAB-ON-GRADE JOINT DETAILS

Scale: NTS

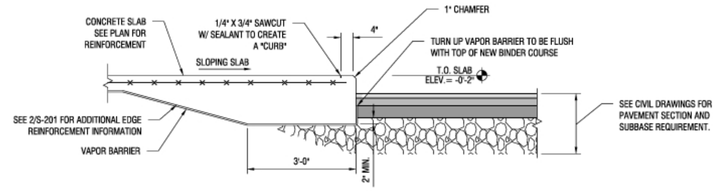

7 SECTION AT EDGE OF ROADWAY

Scale: NTS

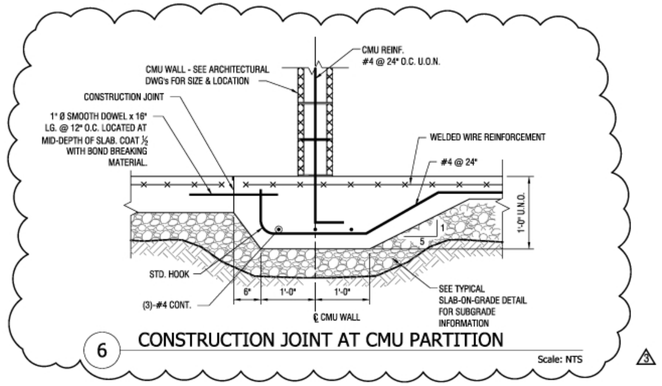

6 CONSTRUCTION JOINT AT CMU PARTITION

Scale: NTS

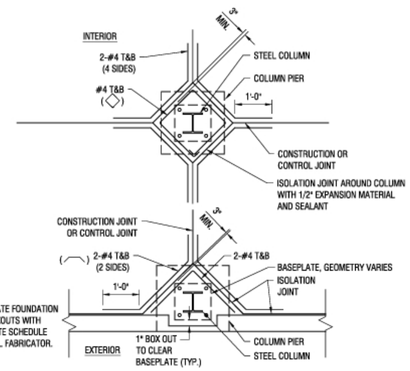

5 TYPICAL COLUMN ISOLATION JOINT DETAILS

Scale: NTS

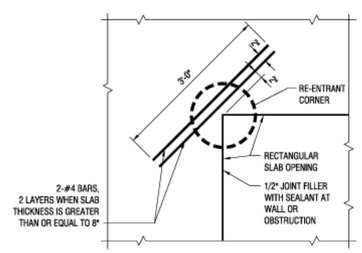

NOTES:
1. TYPICAL AT ALL SLAB AND FOUNDATION RE-ENTRANT CORNERS.
2. 4'-0" LONG BARS ARE TYPICAL AT ENDS OF ALL TRENCH DRAINS.

4 TYPICAL PLAN AT RE-ENTRANT CORNER

Scale: NTS

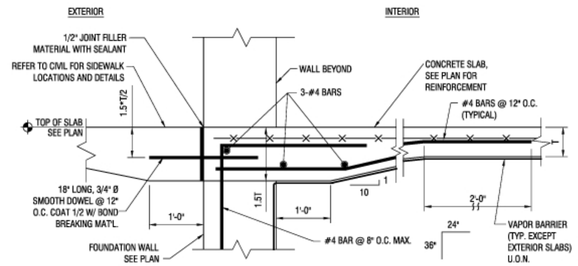

3 TYPICAL SLAB AT DOOR OPENING

Scale: NTS

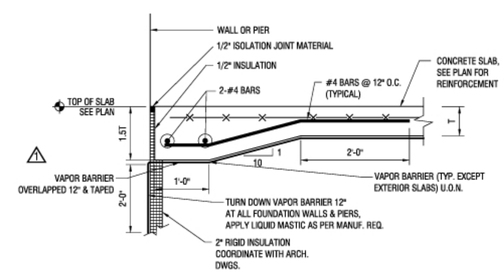

2 TYPICAL SLAB-ON-GRADE EDGE DETAIL

Scale: NTS

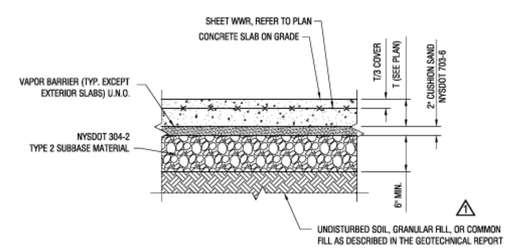

1 TYPICAL SLAB-ON-GRADE DETAIL

Scale: NTS

36x24 PLOT SHEET

NYS OFFICE OF GENERAL SERVICES

Serving New York

ANDREW M. CUOMO
Governor
ROANN M. DESTITO
COMMISSIONER
JAMES M. DAVIES, A.I.A.
Deputy Commissioner, Design and Construction

CONSULTANT

LABELLA Associates, P.C.
Engineering
Architecture
Environmental
Planning

300 STATE STREET, SUITE 201
ROCHESTER, NY 14614
P: (585) 454-6110
F: (585) 454-3066
www.labellapc.com
Copyright © 2012

WARNING:

THE ALTERATION OF THIS MATERIAL IN ANY WAY, UNLESS DONE UNDER THE DIRECTION OF A COMPARABLE PROFESSIONAL, I.E. ARCHITECT FOR AN ARCHITECT, ENGINEER FOR AN ENGINEER OR LANDSCAPE ARCHITECT FOR A LANDSCAPE ARCHITECT, IS A VIOLATION OF THE NEW YORK STATE EDUCATION LAW AND/OR REGULATIONS AND IS A CLASS 'A' MISDEMEANOR.

STATE OF NEW YORK · MATTHEW C. WASS · 083262 · LICENSED PROFESSIONAL ENGINEER

CONTRACT:
CONSTRUCTION

TITLE:
PROVIDE CITYSCAPE COMPLEX

LOCATION:
STATE PREPAREDNESS TRAINING CENTER
5900 AIRPORT ROAD
ORISKANY, NY 13424

CLIENT:
DIVISION OF HOMELAND SECURITY & EMERGENCY SERVICES

REVISED DRAWING
09/05/2012

MARK	DATE	DESCRIPTION
3	09/05/2012	ADDENDUM NO. 6
2	08/29/2012	ADDENDUM NO. 3
1	08/15/2012	ADDENDUM NO. 2
	07/05/2012	FINAL SUBMISSION

PROJECT NUMBER: 44014 – C

DESIGNED BY:
DRAWN BY:
FIELD CHECK:
APPROVED:

SHEET TITLE:
SLAB–ON–GRADE SECTIONS AND DETAILS

DRAWING NUMBER:
S–201

SHEET X OF X

LOOSE LINTEL SCHEDULE

(NON-LOADBEARING MASONRY PARTITION WALLS ONLY)

MAXIMUM MASONRY OPENING	MASONRY WALL THICKNESS				
	BRICK	6-INCH WALLS	8-INCH WALLS	10-INCH WALLS	12-INCH WALLS
3'-0"	(1) L4x3½x¼	(2) L3½x2½x¼	(2) L4x3½x¼	L5x5x½ + L4x3½x¼	L6x6x5/16 + L5x5x5/16
4'-0"	(1) L4x3½x¼	(2) L3½x2½x¼	(2) L4x3½x¼	L5x5x½ + L4x3½x¼	L6x6x5/16 + L5x5x5/16
5'-0"	(1) L5x3½x5/16	(1) WT5x11	(2) L6x3½x5/16	L5x5x½ + L4x3½x¼	L6x6x5/16 + L5x5x5/16
6'-0"	(1) L5x3½x5/16	(1) WT5x11	(2) L6x3½x5/16	L5x5x½ + L5x3½x¼	W8x21 W/ ½"x11" PL.
7'-0"	(1) L6x3½x⅜	(1) WT5x11	(2) L6x3½x5/16	L5x5x5/16 + L5x3½x5/16	W8x21 W/ ½"x11" PL.
8'-0"	(1) L6x3½x⅜	(1) WT5x11	(2) L6x3½x5/16	L5x5x5/16 + L5x3½x5/16	W8x21 W/ ½"x11" PL.
10'-8"	(1) L6x3½x½				

INTERIOR LINTEL NOTES

1. LINTELS SUPPORTING EXTERIOR MASONRY SHALL BE HOT-DIPPED GALVANIZED AND HAVE A MINIMUM 5/16" THICKNESS.
2. LINTELS SHALL EXTEND 8 INCHES BEYOND EACH SIDE OF THE OPENING AND LINTEL ANGLES SHALL HAVE THE LONG LEG VERTICAL.
3. FRAME LINTELS INTO STEEL COLUMNS WHERE 8 INCH BEARING CANNOT BE ACCOMODATED.

8 LOOSE LINTEL SCHEDULE

Scale: N.T.S.

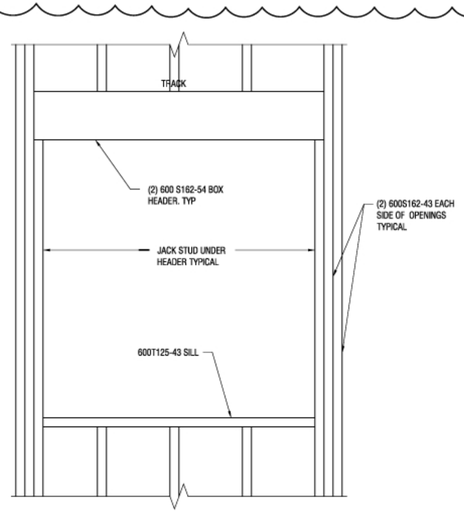

7 TYPICAL OPENING ELEVATION

Scale: 1" = 1'-0"

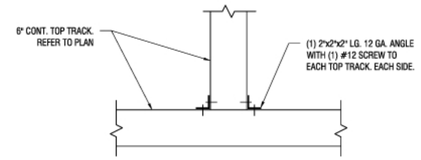

6 FREE-STANDING WALL TOP TRACK CONNECTION DETAIL

Scale: 1" = 1'-0"

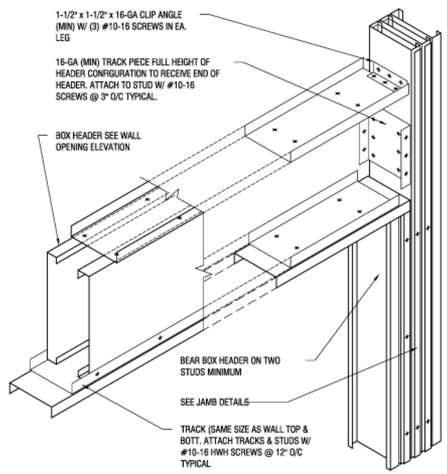

5 TYPICAL BOXED HEADER CONSTRUCTION

Scale: 1" = 1'-0"

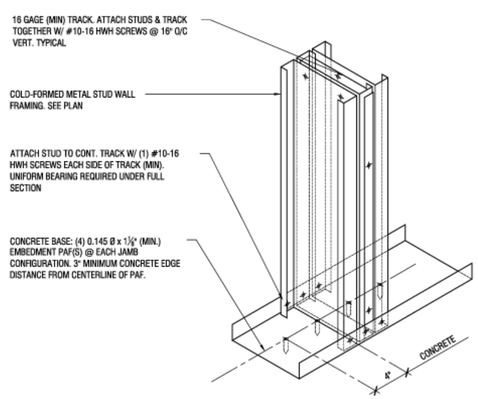

4 SECTION AT TRACK AND JAMB

Scale: 1 1/2" = 1'-0"

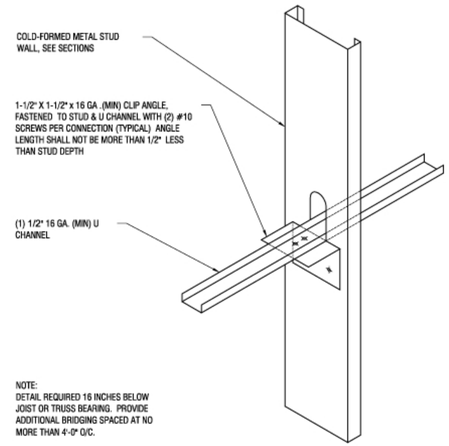

3 TYPICAL SECTION AT CHANNEL BRIDGING

Scale: 1 1/2" = 1'-0"

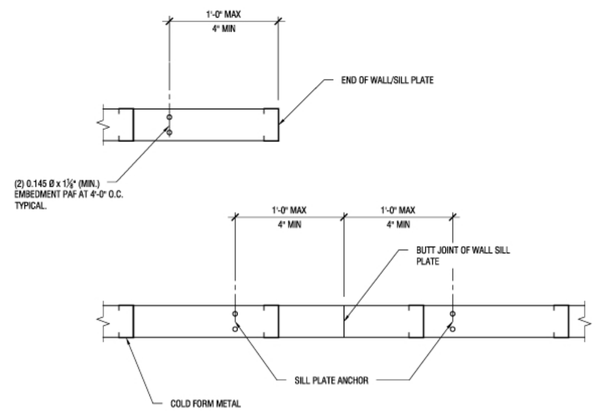

2 TYPICAL END OF SILL PLATE ANCHOR LOCATION

Scale: 1 1/2" = 1'-0"

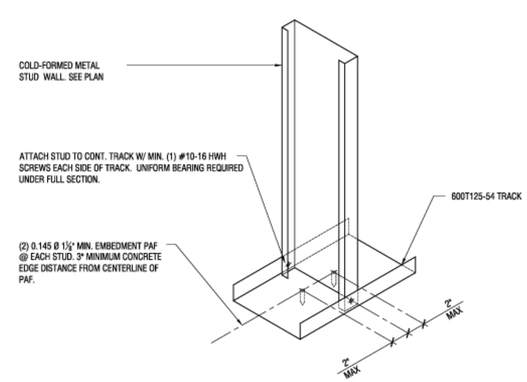

1 SECTION AT TRACK

Scale: 1 1/2" = 1'-0"

36x24 PLOT SHEET

NYS OFFICE OF GENERAL SERVICES
Serving New York
ANDREW M. CUOMO
Governor
ROANN M. DESTITO
COMMISSIONER
JAMES M. DAVIES, A.I.A.
Deputy Commissioner, Design and Construction

CONSULTANT

LABELLA Associates, P.C.
Engineering
Architecture
Environmental
Planning

300 STATE STREET, SUITE 201
ROCHESTER, NY 14614
P: (585) 454-6110
F: (585) 454-3066
www.labellapc.com

Copyright © 2012

WARNING:
THE ALTERATION OF THIS MATERIAL IN ANY WAY, UNLESS DONE UNDER THE DIRECTION OF A COMPARABLE PROFESSIONAL, I.E. ARCHITECT FOR AN ARCHITECT, ENGINEER FOR AN ENGINEER OR LANDSCAPE ARCHITECT FOR A LANDSCAPE ARCHITECT, IS A VIOLATION OF THE NEW YORK STATE EDUCATION LAW AND/OR REGULATIONS AND IS A CLASS 'A' MISDEMEANOR.

STATE OF NEW YORK · MATTHEW C. WAGNER · 083282 · LICENSED PROFESSIONAL ENGINEER

CONTRACT:
CONSTRUCTION

TITLE:
PROVIDE CITYSCAPE COMPLEX

LOCATION:
STATE PREPAREDNESS TRAINING CENTER
5900 AIRPORT ROAD
ORISKANY, NY 13424

CLIENT:
DIVISION OF HOMELAND SECURITY & EMERGENCY SERVICES

REVISED DRAWING 09/05/2012

MARK	DATE	DESCRIPTION
1	09/05/2012	ADDENDUM NO. 6
	07/06/2012	FINAL SUBMISSION

PROJECT NUMBER: 44014 – C
DESIGNED BY:
DRAWN BY:
FIELD CHECK:
APPROVED:
SHEET TITLE:
TYPICAL METAL STUD DETAILS

DRAWING NUMBER:
S–301

SHEET X OF X

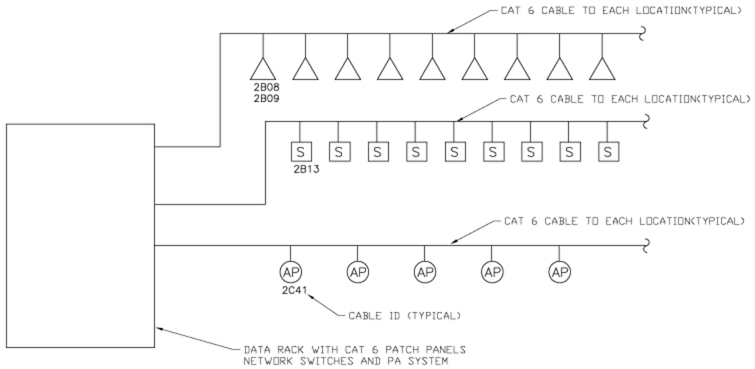

3 / T-502 TYPICAL NETWORK ONE LINE DIAGRAM
SCALE: NOT TO SCALE

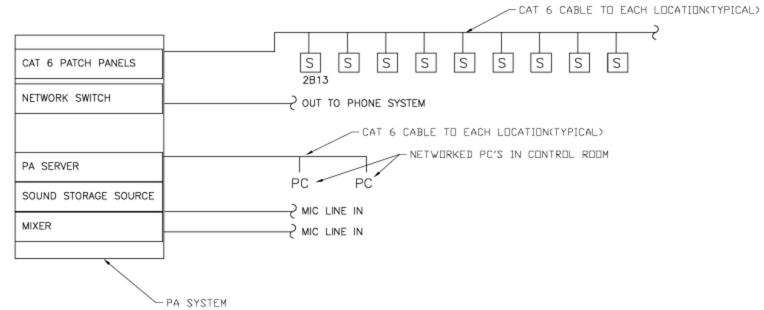

4 / T-502 TYPICAL PUBLIC ADDRESS ONE LINE DIAGRAM
SCALE: NOT TO SCALE

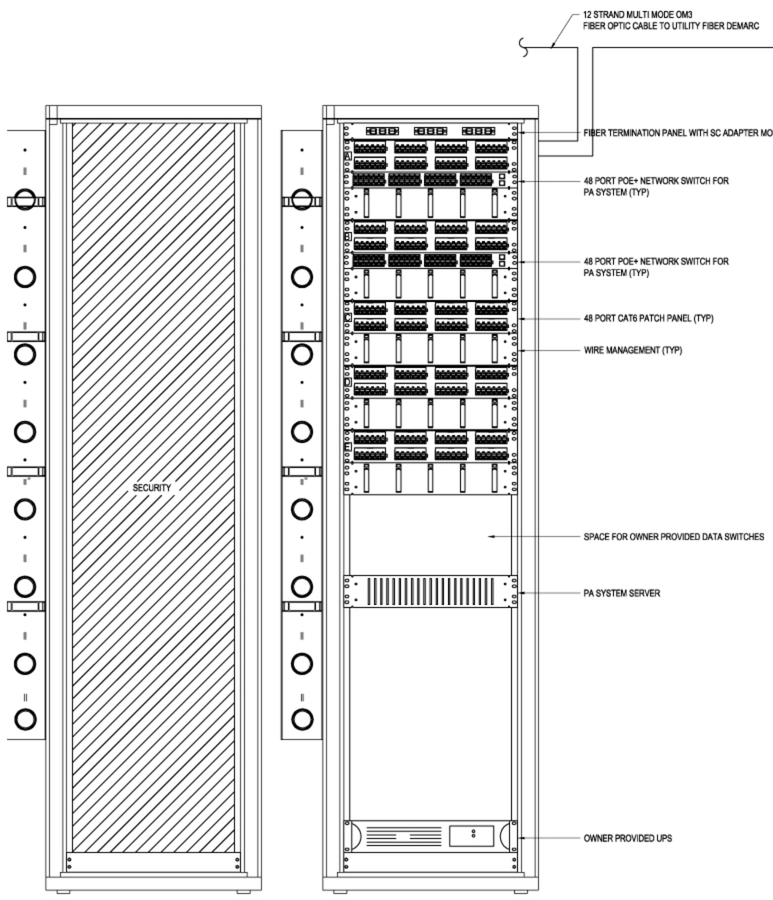

2 / T-502 TR 2 RM 200 RACK ELEVATION
SCALE: NOT TO SCALE

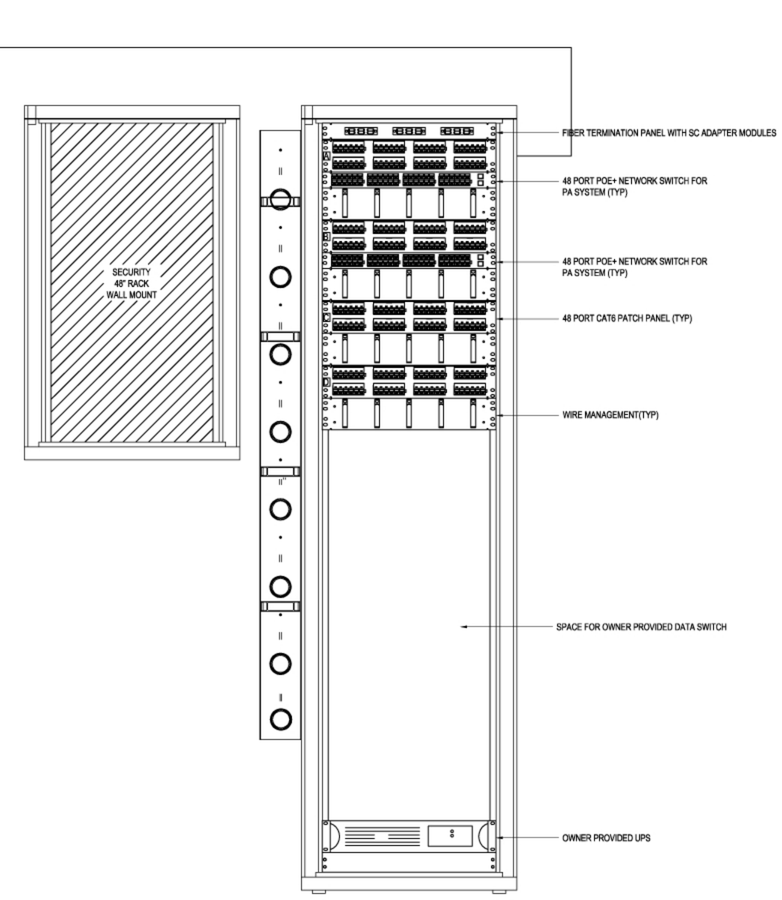

1 / T-502 TR 1 RM 129A RACK ELEVATION
SCALE: NOT TO SCALE

NYS OFFICE OF GENERAL SERVICES
Serving New York
ANDREW M. CUOMO
Governor
ROANN M. DESTITO
COMMISSIONER
JAMES M. DAVIES, A.I.A.
Deputy Commissioner, Design and Construction

CONSULTANT

C&S COMPANIES®
C&S Engineers, Inc.
499 Col. Eileen Collins Blvd.
Syracuse, New York 13212
Phone: 315-455-2000
Fax: 315-455-9667
www.cscos.com

WARNING:
THE ALTERATION OF THIS MATERIAL IN ANY WAY, UNLESS DONE UNDER THE DIRECTION OF A COMPARABLE PROFESSIONAL, I.E. ARCHITECT FOR AN ARCHITECT, ENGINEER FOR AN ENGINEER OR LANDSCAPE ARCHITECT FOR A LANDSCAPE ARCHITECT, IS A VIOLATION OF THE NEW YORK STATE EDUCATION LAW AND/OR REGULATIONS AND IS A CLASS "A" MISDEMEANOR.

STATE OF NEW YORK
DOUGLAS J. OBRIST
078077
LICENSED PROFESSIONAL ENGINEER

CONTRACT:

TITLE:
PROVIDE CITYSCAPE COMPLEX

LOCATION:
STATE PREPAREDNESS TRAINING CENTER
5900 AIRPORT ROAD
ORISKANY, NY 13424

CLIENT:
DIVISION OF HOMELAND SECURITY
& EMERGENCY SERVICES

REVISED DRAWING
9/5/2012

MARK	DATE	DESCRIPTION
2	09/05/2012	ADDENDUM NO 6
	07/05/2012	FINAL SUBMISSION
	06/11/2012	100% SUBMISSION

PROJECT NUMBER:	44014 – E
DESIGNED BY:	W.R.B.
DRAWN BY:	D.W.B.
FIELD CHECK:	WHM
APPROVED:	WRB

SHEET TITLE: ELECTRICAL
RACK ELEVATIONS

DRAWING NUMBER:
T-502

SHEET OF

Sep 05,2012 – 2:36pm
F:\Project\190 – NYSOGS\190429034-cityscape\Design\CADD\Sheet Files\Telecom\A02_190429034A_T-502.dwg
36x24 PLOT SHEET