STATE OF NEW YORK
OFFICE OF GENERAL SERVICES
DESIGN AND CONSTRUCTION GROUP
THE GOVERNOR NELSON A. ROCKEFELLER
EMPIRE STATE PLAZA
ALBANY, NY 12242

ADDENDUM NO. 1 TO PROJECT NO. 44080

CONSTRUCTION WORK
PROVIDE ROOFING AND SIDING
TRAINING, MAINTENANCE AND GARAGE BUILDINGS
MacCORMICK SECURE CENTER
300 SOUTH ROAD
BROOKTONDALE, NY

January 23, 2012

NOTE: This Addendum forms a part of the Contract Documents. Insert it in the Project Manual. Acknowledge receipt of this Addendum in the space provided on the Bid Form.

SPECIFICATIONS

1. SECTION 003126 EXISTING HAZARDOUS MATERIAL INFORMATION: Add the accompanying section (page 003126-1) to the Project Manual

2. SECTION 013350 COMPUTER AIDED DESIGN COORDINATION DRAWINGS: Discard the Section bound in the Project Manual.

3. SECTION 028433 ABATEMENT OF PCB CONTAINING CAULK SEALANT MATERIALS: Add the accompanying section (pages 028433-1 thru 028433-8) to the Project Manual.

4. RENOVATION SURVEY FOR ASBESTOS, LEAD BASED PAINT & PCB's: Add the accompanying report to the Appendix of the Project Manual.

DRAWINGS

5. Drawing No. A-6-101:
   a. General Notes: Add the following note:

      "5. PCBs were found in the caulk around the exterior doors. See "Renovation Survey for Asbestos, Lead Based Paint & PCB's" report for more information. Comply with the requirements described in Section 028433 of the Project Manual."

6. Addendum Drawing:
   a. Drawing No. SK-1, noted "ADDENDUM #1 1/20/12" accompanies this Addendum and forms part of the Contract Documents.

END OF ADDENDUM

James Dirolf, P.E.
Director of Design

DOCUMENT 003126

EXISTING HAZARDOUS MATERIAL INFORMATION

1.01 ASBESTOS SURVEY REPORT

Samples listed in the report were collected at the Project Site and tested for Asbestos Containing Materials (ACM). The report was compiled for New York State Office of General Services, Design and Construction Group by an ELAP certified laboratory. In order to determine the Asbestos content, samples were analyzed by polarized light microscopy (PLM) and/or transmission electron microscopy (TEM). The report is intended for the State design and estimate purposes only, and is included to provide bidders with that same information available to the State. The Bulk Samples are representative of Homogeneous Area (HA) and is defined as a suspect material of similar age, appearance, function and texture. All field information was organized in accordance with 40 CFR Part 763, Asbestos Hazard Emergency Response Act (AHERA). See the Renovation Survey for Asbestos, Lead Based Paint & PCB's report included in the Appendix for type, condition, location and approximate quantity of ACM.

1.02 LEAD SURVEY REPORT

Samples listed in the report were collected at the Project Site and tested for Lead content. The report was compiled for New York State Office of General Services, Design and Construction Group by an ELAP certified laboratory. In order to determine the lead content the Atomic Absorption method or a XRF Analyzer was used. This report is intended for State design and estimate purposes only, and is included to provide bidders with the same information available to the State. The samples are representative of like materials in the Work area. All lead containing materials may not have been sampled. See the Renovation Survey for Asbestos, Lead Based Paint & PCB's report included in the Appendix for details.

1.05 PCB SAMPLING REPORT

Samples listed in the report were collected at the Project Site and tested for PCBs. The report was compiled for New York State Office of General Services, Design and Construction Group by an ELAP certified laboratory. Bulk, wipe or air sampling was used in determining the PCB content. This report is intended for State design and estimate purposes only, and is included to provide bidders with the same information available to the State. All PCB containing materials may not have been sampled. See the Renovation Survey for Asbestos, Lead Based Paint & PCB's report included in the Appendix for details.

END OF DOCUMENT

SECTION 028433

ABATEMENT OF PCB CONTAINING CAULK-SEALANT MATERIALS

PART 1 - GENERAL

1.01 SUMMARY:

A. This section specifies the procedures for removal of existing polychlorinated biphenyls (PCB) containing caulking materials, and disposal of removed materials.

B. Disturbance or dislocation of polychlorinated biphenyls (PCB) containing caulking materials may cause a health hazard to work persons and building occupants. Contractor shall appraise all of his workers, supervisory personnel, subcontractors and consultants who will be at job site of the seriousness of the hazard and of proper work procedures which must be followed.

C. Where in the performance of the work, workers, supervisory personnel, subcontractors, or consultants may encounter, disturb or otherwise function in the immediate vicinity of polychlorinated biphenyls (PCB) containing caulking materials, appropriate, continuous measures as necessary to protect all building occupants from the hazard of exposure shall be taken. Such measures shall include the procedures and methods described herein, regulations of the U.S. Occupational Safety & Health Administration (OSHA), U.S. Environmental Protection Agency (EPA), the New York State Department of Labor, and the New York State Department of Environmental Conservation.

D. The results of the testing for PCB containing caulking/sealants are listed in the Renovation Survey for Asbestos, Lead based Paint & PCB's bound in the Appendix.

1.02 RELATED WORK SPECIFIED ELSEWHERE

A. Existing Hazardous Material Information: Document 003126.

B. Summary of the Work: Section 011000.

C. Construction Facilities and Temporary Controls: Section 015000.

D. Removals, Cutting, and Patching: Section 017329.

E. Abatement of Lead Containing Materials: Section 028303.

1.03 REFERENCES

A. TSCA (Toxic Substances Control Act)

B. CERCLA (Federal "Superfund")

C. New York State Department of Environmental Conservation (DEC) 6NYCRR:
   1. Part 360 Solid Waste Management Facilities.
   2. Part 364 Waste Transporter Permits.
   3. Part 370 Hazardous Waste Management System-General.
   4. Part 371 Identification and Listing of Hazardous Wastes.
   5. Part 372 Hazardous Waste Manifest System and Related Standards for Generators, Transporters and Facilities.
   6. Part 373 Hazardous Waste Management Facilities.

D. OHSA (Occupational Safety and Health Administration) CFR Title 29.

E. EPA (Environmental Protection Agency)

F. CDC (Center for Disease Control): Air Pollution and Respiratory Health.

1.04 DEFINITIONS

A. Authorized Personnel: Facility or the Director's Representative, and all other personnel who are authorized officials of any regulating agency, be it State, Local, Federal or Private entity who possess legal authority for enforcement or inspection of the work.

B Containment: The enclosure within the building which establishes a contaminated area and surrounds the location where hazardous material remediation is taking place and establishes a Lead Control Work Area.

C. Clearance Criteria: A Visual Inspection of all removal surfaces, performed by the independent testing lab employed by the Director's Representative, conforming to all standards set forth by all authorities having jurisdiction, mentioned in the references.

D. Fixed Object: Mechanical equipment, electrical equipment, fire detection systems, alarms, and all other fixed equipment, fixtures or other items which cannot be removed from the work area.

E. HEPA: High Efficiency Particulate Absolute filtration efficiency of 99.97 percent down to 0.3 microns. Filtration provided on specialized vacuums and air filtration devices to trap particles.

F. PCB Solid Hazardous Waste: Materials containing one or more PCB compounds totaling 50 parts per million (ppm) or greater.

G. PPE: Personal Protective Equipment.

1.05 ABBREVIATIONS

A. ASTM: American Society for Testing and Materials
1916 Race Street
Philadelphia, PA 19103

B. CFR: Code of Federal Regulations
Government Printing Office
Washington, DC 20402

C. DOT: New York State Department of Transportation
Main Office, 50 Wolf Road
Albany, NY 12232

D. NIOSH: National Institute for Occupational Safety and Health
Building J.N.E. Room 3007
Atlanta, GA 30333

E. OSHA: Occupational Safety and Health Administration
200 Constitution Avenue
Washington, DC 20210

F. USEPA: United States Environmental Protection Agency
401 M Street SW
Washington, DC 20460

1.06 SUBMITTALS

A Product Data: Catalog sheets, specifications, and application instructions for any removal products, if used.

B. Quality Control Submittals:
1. Worker's Qualifications Data:
   a. Name of each person who will be performing the Work and their employer's name, business address and telephone number.
   b. Names and addresses of 3 similar projects that each person has worked on during the past 3 years and documentation of completion of appropriate PCB/Hazardous Waste training program and supervisors with appropriate PCB/Hazardous Waste supervisor training.
2. Work Plan: Submit one copy of the work plan required under Quality Assurance Article.
3. Waste Transporter Permit: One copy of transporter's current waste transporter permit.

C. PCB Work Closeout Submittals:
1. Disposal Site Receipts: Copy of waste shipment record and disposal site receipt showing the PCB-containing materials have been properly disposed of.

1.07 QUALITY ASSURANCE

A. Contractor shall provide and assure that the quality of work practices and procedures are consistent with the below listed agencies. Contractor shall utilize the latest edition, including all addenda, revisions and supplements for all regulatory agencies codes, etc., including but not limited to:

1. Environmental Protection Agency (EPA).
2. Occupational Safety and Health Administration.
3. State of New York codes and laws.
4. All local codes.

B. Worker's Qualifications: The persons performing PCB Caulk abatement and their supervisor shall be personally experienced in PCB abatement work and shall have been regularly employed by a company performing PCB abatement for a minimum of 3 years.

C. Regulatory Requirements: Comply with the referenced standards.

D. Pre-Work Conference: Before the Work of this Section is scheduled to commence, a conference will be held by the Director's Representative at the Site for the purpose of reviewing the Contract Documents, discussing requirements for the Work, and reviewing the Work procedures.
   1. The conference shall be attended by the Contractor, the PCB Caulk removal subcontractor, and the testing/monitoring laboratory employed by the Director.

E. PCB Containing Caulk Removal Work Plan: At the conclusion of the pre-work conference, before the physical PCB containing caulk abatement Work begins, prepare a detailed PCB-containing material removal work plan.
   1. The work plan shall include, but not be limited to, a drawing indicating the location, size, and details of PCB Caulk Collection Areas (dropcloths etc.,) staging areas for PCB caulk removal from identified area, location and details of containment, decontamination facilities, sequencing of window/caulk removal, work procedures, types of equipment, crew size, and emergency procedures for fire and medical emergencies.

1.08 PROJECT CONDITIONS

A. Install 2 layers of 6 mil fire retardant polyethylene sheeting over the inside of all openings within 25 feet of the removal area to prevent contamination of the interior of the affected spaces.

B. Provide 6 mil fire retardant polyethylene drop cloths to collect debris from removal operation. Remove caulk to the exterior and place into drum/container.
   1. Using wet methods, scrape all residual PCB containing caulking from rough building opening down to a bare, clean surface.
   2. Contractor shall collect all removed caulking and contaminated poly sheeting and properly drum/containerize for disposal or incineration in accordance with applicable State and Federal regulations.

C. Remove polyethylene sheeting from openings after the Director's testing/ monitoring laboratory has confirmed complete removal of PCB containing caulking. Include removed poly sheeting in disposal drum/container for disposal as PCB contaminated material.

1.09 PERSONAL PROTECTIVE CLOTHING AND EQUIPMENT

A. Workers must wear protective suits, protective gloves, eye protection and a minimum of half-face respirator with HEPA filter cartridge for all projects. Respiratory protection shall be in accordance with OSHA regulation 1910.134 and ANSI Z88.2.

B. Workers must be trained as per OSHA and EPA requirements, have medical clearance and must have recently received pulmonary function test (PFT) and respirator fit tested by a trained professional.
   1. A personal air sampling program shall be in place as required by OSHA.
   2. The use of respirators must also follow a complete respiratory protection program as specified by OSHA.

1.10 JOB CONDITIONS

A. Posting of regulations: Display the following documents in the clean changing area, in public view, for the full duration of the work:
   1. Instructions for removing injured persons from work area.
   2. Post emergency action plan at the work site. This plan shall also include telephone numbers for hospital, doctor and Fire Company.

PART 2 - PRODUCTS

2.01 ABATEMENT PRODUCTS

A. Disposal Drums: Metal or fiberboard with locking ring tops, with warning labels as required by OSHA, NYSDEC and/or EPA.

B. Respirators:
   1. Type: Approved by the Mine Safety and Health Administration (MSHA), Department of Labor, or the National Institute for Occupational Safety and Health (NIOSH), Department of Health and Human Services.

C. Vacuum Cleaners:
   1. Type: Vacuums equipped with HEPA filters.

D. Plastic Sheets:
   1. Type: Minimum 6 mil., opaque, fire retardant polyethylene sheets.
   2. Floor Protective Layer: Minimum 10 mil., reinforced polyethylene sheets.

2.02 GENERAL EQUIPMENT

A. A sufficient supply of disposable mops, rags, and sponges for work area decontamination shall be available.

B. A sufficient supply of scaffolding, ladders, lifts, and hand tools, (e.g., scrapers, wire cutters, brushes, utility knives, wire saws, etc.) shall be provided as needed.

2.04 PERSONNEL PROTECTION

A. Safety equipment (e.g., hard hats meeting the requirements of ANSI Standard Z89.1-1981, eye protection meeting the requirements of ANSI Standard Z87.1-1979, safety shoes meeting the requirements of ANSI Standard Z41.1-1967, disposable PVC gloves or other work gloves), shall be provided to all workers and authorized visitors.

B. Nonskid footwear shall be provided to all abatement workers. Disposable clothing shall be adequately sealed to the footwear to prevent body contamination.

PART 3 - EXECUTION

3.01 EMERGENCY PLANNING

A. Description: The Contractor shall prepare an emergency preparedness plan detailing at least the information required in this section and in any applicable federal, state or local regulations.

B. Details of Plan:
   1. Emergency planning shall be developed prior to abatement initiation and submitted to the Director for review.
   2. Emergency procedures shall be in written form and prominently posted in the clean change area of the worker decontamination area.
   3. Emergency planning shall include written notification of police, fire and emergency medical personnel of planned abatement activities, work schedule and layout of work area, particularly barriers that may affect response capabilities.
   4. Emergency planning shall include considerations of fire, electrical hazards, slips, trips, and falls, spills or releases of hazardous materials and heat related injury. Written procedures shall be developed and employee training in procedures shall be provided.
   5. Employees shall be trained in evacuation procedures in the event of work place emergencies.
      a. For Non-Life-Threatening Situations: Employees injured or otherwise incapacitated shall decontaminate following normal procedures with assistance from fellow workers, if necessary, before exiting the work place to obtain proper medical treatment.
      b. For Life-Threatening Injury or Illness: Worker decontamination shall take least priority. After measures to stabilize the injured worker, the injured worker shall be removed from the work place and secure proper medical treatment.

C. Telephone numbers of all emergency response personnel shall be prominently posted in the clean area and equipment room, along with the location of the nearest telephone.

3.02 NOTIFICATION

A. Notify the Director's Representative a minimum of 5 working days prior to the start of PCB Caulk removal work.

3.03 EMPLOYEE PROTECTION

A. Comply with all applicable Occupational Safety and Health Administration (OSHA) Requirements.

3.04 WORK AREA PROTECTION

A. Protection of Existing Construction: Perform PCB caulk removal work without damage or contamination of adjacent areas and existing construction.

3.05 PCB-CONTAINING MATERIAL REMOVAL

A. Perform removal of PCB-containing materials in accordance with approved PCB-containing material removal work plan.

B. Use procedures and equipment as required to limit occupational and environmental exposure to PCB's when PCB-containing caulk is removed in accordance with referenced standards.
   1. Limit the production and dissemination of caulk debris as much as possible.
   2. Perform manual wet scraping to the maximum extent feasible.

3.06 CERTIFICATION OF ABATEMENT

A. Schedule visual clearance inspection with the Director's Representative at the site, when work area is ready for clearance testing.

B. Director's Representative will employ the services of an independent testing/monitoring lab to perform visual clearance inspection. Clearance Criteria requirements are specified in PART 1 of this Section.
   1. Prior to removal of any isolation barrier, the Director's Representative will obtain a written affidavit and a final assessment report from the monitoring lab stating that the visual clearance assessment conforms to all standards set forth by all authorities having jurisdiction, mentioned in the references.
   2. Schedule a walk-through inspection with the Director's Representative and obtain the Director's Representative's written approval.

C. The Director's Representative shall have final determination of an acceptable clearance level.

3.06 DISPOSAL OF PCB CONTAINING CAULKING MATERIALS

A. Properly containerized waste must be transported by a licensed hauler and shipped to an EPA approved PCB Recycling or incineration facility. Waste manifests must show chain of custody. Provide one copy of the waste manifests to the Owner.

B. All contaminated waste shall be carefully loaded on trucks or other appropriate vehicles for transport. Before and during transport, care shall be exercised to insure that no unauthorized persons have access to the material.

C. Transporters of the waste are prohibited from "back hauling" any freight after the disposition of the Owner's waste stream until decontamination of the vehicle and/or trailer is assured.

3.07 WASTE MANAGEMENT AND DISPOSAL

A. The Contractor shall be responsible for all packaging, labeling, transport, disposal and record-keeping associated with PCB waste in accordance with all federal, state and local regulations.

B. The Contractor shall ensure that the person transporting the waste holds a valid permit issued in accordance with appropriate federal, state, and local regulations.

C. The Contractor shall provide to the transporter at the time of transfer appropriate shipping records as required by the federal, state and local regulations with a copy to the project engineer.

D. Contractor shall maintain proper follow up procedures to assure that waste materials have been received by the designated waste site in a timely manner and in accordance with all federal, state and local regulations.

E. The Contractor shall assure that disposal of polychlorinated biphenyls (PCB) containing caulking material is at a facility approved to accept such waste and shall provide a tracking/manifest form signed by the landfill's authorized representative.

3.08 RESTORATION

A. Remove temporary decontamination facilities and restore area designated for these facilities to its original condition or better.

B. Where existing construction is damaged or contaminated, restore work to its original condition or better.

END OF SECTION

JAZ

Adelaide
Environmental Health Associates, Inc.

1511 Route 22, Suite C 24, Brewster, NY 10509
Phone: 845.278.7710 Fax: 845.278.7750

Metro Center, 49 Court Street, Binghamton, NY 13901
Phone: 607.722.6839 Fax: 607.771.0752

1207 Delaware Avenue, Buffalo, NY 14209
Phone: 716.332.6121 Fax: 716.877.9570

E-mail: adelaidemail@adelaidellc.com

TRANSMITTAL LETTER

TO: **Robert Kennedy**
NYS Office of General Services
Corning Tower, 35th Floor
The Governor Nelson A. Rockefeller Plaza
Albany, NY 12242

DATE: 09.27.2011

ENCLOSED ARE THE FOLLOWING ITEMS:

COPIES	DESCRIPTION
1	Asbestos, Lead and PCB Report for MacCormick Secure Center OGS Project 44080 Brooktondale, NY 14817

TRANSMITTED AS CHECKED BELOW:

- ☐ FOR APPROVAL
- ☐ FOR YOUR USE
- ☐ AS REQUESTED
- ☐ FOR REVIEW & COMMENT
- ☐ FOR YOUR SIGNATURE
- ☐ RETURNED FOR CORRECTIONS
- ☐ FOR YOUR REVIEW
- ☐ YOUR COMMENTS PLEASE
- ☐ REVIEW & RETURN

NOTES:

COPY TO: Subu Nair, Joan Zent, Michael Rabideau, Jeff Federko

SIGNED: Kerry Lovett

Adelaide
Environmental Health Associates, Inc.

1511 Route 22, Suite C24, Brewster, NY 10509
Phone: 845.278.7710 Fax: 845.278.7750

Metro Center, 49 Court Street, Binghamton, NY 13901
Phone: 607.722.6839 Fax: 607.771.0752

1207 Delaware Avenue, Buffalo, NY 14209
Phone: 716.402.4580 Fax: 716.877.9570

E-mail: adelaidemail@adelaidellc.com

RENOVATION SURVEY FOR ASBESTOS, LEAD BASED PAINT & PCB's

PERFORMED AT:

MacCormick Secure Center
Training, Maintenance and Garage Buildings
300 South Road
Brooktondale, New York 14817
OGS Project # 44080
Adelaide Project# OGS: 11175.00-IN

PREPARED FOR:

Robert Kennedy
New York State Office of General Services
Design and Construction
Project Control, 35th Floor, Corning Tower
The Governor Nelson A. Rockefeller Empire State Plaza
Albany, New York 12242

PREPARED BY:

James J. Reber
September 26, 2011

REVIEWED BY:

Stephanie A. Soter
President

RENOVATION SURVEY FOR ASBESTOS, LEAD BASED PAINT & PCB's

TABLE OF CONTENTS

1.0	Background/Purpose	1
2.0	Executive Summary of Inspection Results	1
3.0	Asbestos Field Procedures and Analysis Methodology	3
	3.1 Inspection	3
	3.2 Sampling	3
	3.3 Analysis	4
4.0	Conclusions and Recommendations	5
5.0	Areas not Accessible	5
6.0	Report Certifications	5
7.0	Transmittal of Building Survey	5

APPENDICES

Asbestos Analytical Results and Chain of Custody Forms	Appendix A
Lead Based Paint Data Sheets	Appendix B
PCB Data Sheets	Appendix C
Personnel and Laboratory Certifications	Appendix D
Photograph of Positive PCB Sample	Appendix E

1.0 BACKGROUND/PURPOSE

Adelaide Environmental Health Associates, Inc. (Adelaide) was retained by OGS to perform an investigative asbestos, lead based paint and PCB survey at the MacCormick Secure Center, Training, Maintenance and Garage Buildings (#7,6 & 13) in Brooktondale, New York. This survey was based on the scope of work provided by OGS. The inspection was performed on September 1, 2011 by Adelaide representative James Reber (certified asbestos inspector/EPA lead paint inspector).

2.0 EXECUTIVE SUMMARY OF INSPECTION RESULTS

Following the scope of work that was given to us, Adelaide inspected suspect materials that may be impacted from the rehabilitation of the roofs, windows, doors and siding on buildings 6, 7 and 13. Adelaide collected thirty-six (36) asbestos samples, four (4) PCB's samples and forty-nine (49) XRF readings from the above-mentioned areas. Zero (0) samples/homogenous areas tested positive for asbestos, one (1) samples/homogenous areas tested positive for PCB's and zero (0) XRF readings tested positive for lead based paint. No caulk or suspect caulk was observed at the training building. The positive sample for PCB's was taken from the door of the maintenance building leading into the garage area. There was no caulk on the door into the open office area of the maintenance building. There was also no caulk observed on the garage building windows or doors.

Summary of PCB Containing Materials:

Sample #	Sample Location	Material Sampled	Reading (mg/Kg)
4	Maintenance Building Door to the Garage	Exterior Door Caulk	179

Negative Material List

The following is a list of the homogeneous areas that tested negative during this inspection:

Training Building:
- Brown Roof Shingles
- Tar Paper on Deck
- Heavy Weight Tar Paper
- Drywall
- Joint Compound

Maintenance Building:
- Red Roof Shingles
- Tar Paper on Deck
- Chimney Flashing Tar
- Drywall
- Joint Compound
- Window Glazing Compound
- Door Caulk (old brittle)

Garage Building:

- Roofing Shingles
- Tar Paper Under Shingles on Cedar
- Window Glazing Compound
- Caulk @ Concrete Foundation
- Drywall
- Joint Compound

3.0 ASBESTOS FIELD PROCEDURES AND ANALYSIS METHODOLOGY

3.1 INSPECTION

Guidelines used for the inspection were established by the U.S. Environmental Protection Agency (EPA) in the Guidance for Controlling Asbestos Containing Materials in Buildings, Office of Pesticides and Toxic Substances, DOC# 560/5-85-024 and 40 CFR Part 763, Asbestos Hazard Emergency Response Act (AHERA). Field information was organized as per the AHERA concept of a homogeneous area (HA); that is, suspect Asbestos Containing Materials (ACM) with similar age, appearance, and texture were grouped together, sampled and assessed for condition.

For the purposes of this inspection, suspect ACM has been placed in three material categories: thermal, surfacing, and miscellaneous.

Surfacing materials are those that are sprayed on, troweled on or otherwise applied to surfaces for fireproofing, acoustical, or decorative purposes (e.g., wall and ceiling plaster).

Thermal materials are those applied to heat pipes or other structural components to prevent heat loss or gain or prevent water condensation (e.g., pipe and fitting insulation, duct insulation, boiler flue).

Miscellaneous materials are interior building materials on structural components, structural members or fixtures, such as floor and ceiling tiles, etc. and do not include surfacing material or thermal system insulation.

3.2 SAMPLING

SURFACING MATERIALS

Surfacing materials were grouped into homogeneous sampling areas. A homogeneous area contains material that is uniform in color and texture and appears identical in every other respect. Materials installed at different times belong to different sampling areas. Homogeneous areas were determined on per floor basis.

The following protocol was used for determining the number of samples to be collected:

- At least three bulk samples were collected from each homogeneous area that is 1,000 square feet or less.
- At least five bulk samples were collected from each homogeneous area that is greater than 1,000 square feet but less than or equal to 5,000 square feet.
- At least seven bulk samples were collected from each homogeneous area that is greater than 5,000 square feet.

THERMAL SYSTEM INSULATION (TSI)

The concept of homogeneous sampling areas applies equally well to thermal insulation as to surfacing material. A "typical" building may contain multiple insulated pipe runs from any combination of the following categories:

- Hot water supply and/or return
- Cold water supply
- Chilled water supply
- Steam supply and/or return
- Roof or system drain

The following protocol was used for determining the number of samples to be collected.

- Collect at least three bulk samples from each homogeneous area of thermal system insulation.
- Collect at least one bulk sample from each homogeneous area of patched thermal system insulation if the patched section is less than 6 linear or square feet.
- In a manner sufficient to determine whether the material is ACM or not ACM, collect a minimum of three bulk samples from each homogeneous insulated mechanical system tee, elbow, and valve.

Bulk samples are not collected from any homogeneous area where the certified inspector has determined that the thermal system insulation is fiberglass, foam glass, or rubber.

MISCELLANEOUS MATERIALS

Miscellaneous materials are grouped into different homogeneous areas and at least two bulk samples are collected from each homogeneous area as per the clarification letter from the EPA and the Professional Abatement Contractors of New York, Inc in November of 2007.

3.3 ANALYSIS

Bulk samples of suspect ACM were analyzed by Polarized Light Microscopy (PLM) with dispersion staining, as described in 40CFR Part 763 and the National Emissions Standard for Hazardous Air Pollutants (NESHAPS).

The New York State (NYS) Department of Health has recently revised the PLM Stratified Point Counting Method. The new method, Polarized Light Microscopy for Identifying and Quantitating Asbestos in Bulk Samples can be found as Item 198.1 in the Environmental Laboratory Accreditation Program (ELAP) Certification manual.

The State of New York ELAP has determined that analysis of NOB materials is not reliably performed by PLM. Therefore, if PLM yields negative results for a non-friable material, it must be confirmed by Transmission Electron Microscopy (TEM) analysis.

All NOB samples were initially analyzed by utilizing TEM methodology.

4.0 CONCLUSIONS AND RECOMMENDATIONS

This survey concluded that the materials listed in Section 1.0 Executive Summary tested negative for asbestos and lead based paint and ***positive for PCB's.***

PCBs: *These materials must be removed and disposed of in accordance with applicable codes.*

5.0 AREAS NOT ACCESSIBLE

Adelaide Environmental Health Associates inspected and sampled materials which were visible and/or accessible to the survey team. Adelaide does not inspect physically inaccessible areas, such as between walls, above fixed ceilings, under concrete slabs, etc. This report makes no representations as to the content of these areas or materials.

All materials present in those not accessible areas shall be assumed positive until tested.

6.0 REPORT CERTIFICATIONS

Adelaide Environmental Health Associates certifies that the information contained herein is based on the physical and visual inspections conducted by Adelaide and data collected during the inspection survey.

7.0 TRANSMITTAL OF BUILDING/STRUCTURE ASBESTOS SURVEY

One (1) copy of the results of the building/structure asbestos survey shall be immediately transmitted by the building/structure owner as follows:

(1) One (1) copy of the completed asbestos survey shall be sent by the owner or their agent to the local government entity charged with issuing a permit for such demolition, renovation, remodeling or repair work under applicable State or local laws.

(2) The completed asbestos survey for controlled demolition (as per Subpart 56-11.5) or pre-demolition asbestos projects shall also be submitted to the appropriate Asbestos Control Bureau district office.

(3) The completed asbestos survey shall be kept on the construction site with the asbestos notification and variance, if required, throughout the duration of the asbestos project and any associated demolition, renovation, remodeling or repair project.

APPENDIX A

ASBESTOS ANALYTICAL RESULTS

AND CHAIN OF CUSTODY FORMS

Adelaide
Environmental Health Associates, Inc.
1511 Route 22, Suite C24, Brewster, NY 10509 Tel: 845.278.7710 Fax: 845.278.7750 www.adelaidellc.com

ASBESTOS REPORT FORM

PROJECT NUMBER: 44080
PROJECT LOCATION: Provide Roofing and Siding
Training, Maintenance and Garage Buildings
MacCormick Secure Center
300 South Road
Brooktondale, NY 14817

DATE RECEIVED: 08/29/11
DATE COMPLETED: 09/01/11
DATE REPORTED: 09/23/11
TOTAL SAMPLE COUNT: 36
SAMPLE COLLECTOR(S): James Reber

SERVICES PROVIDED Asbestos Bulk Sampling

PESHOGS NO.	LAB ID NO.	SAMPLE LOCATION, COORDINATES DESCRIPTION AND OTHER COMMENTS	MATERIAL TYPE	TYPE OF ASBESTOS	PLM %	TEM %
11175.00 01	211092091-01	Training Bldg. #7 - Roof - Brown Roof Shingles	Miscellaneous		NAD	NAD
11175.00 02	211092091-02	Training Bldg. #7 - Roof - Brown Roof Shingles	Miscellaneous		NAD	NAD
11175.00 03	211092091-03	Training Bldg. #7 - Roof - Tar Paper on Deck	Miscellaneous		NAD	NAD
11175.00 04	211092091-04	Training Bldg. #7 - Roof - Tar Paper on Deck	Miscellaneous		NAD	NAD
11175.00 05	211092091-05	Training Bldg. #7 - Roof - Heavy Weight Tar Paper	Miscellaneous		NAD	NAD
11175.00 06	211092091-06	Training Bldg. #7 - Roof - Heavy Weight Tar Paper	Miscellaneous		NAD	NAD
11175.00 07	211092091-07	Training Bldg. #7 - 1st Floor Office - Drywall	Miscellaneous		NAD	NA
11175.00 08	211092091-08	Training Bldg. #7 - 1st Floor Office - Drywall	Miscellaneous		NAD	NA
11175.00 09	211092091-09	Training Bldg. #7 - 1st Floor Office - Joint Compound	Miscellaneous		NAD	NA
11175.00 10	211092091-10	Training Bldg. #7 - 1st Floor Office - Joint Compound	Miscellaneous		NAD	NA
11175.00 11	211092092-01	Maintenance Shop Bldg. #6 - Roof - Red Roof Shingles	Miscellaneous		NAD	NAD

NA - Not Analyzed by Method
NA/PS - Not Analyzed, Positive Stop
NAD - No Asbestos Detected
Trace/NAD - Non-Asbestos by Definition

Adelaide
Environmental Health Associates, Inc.
1511 Route 22, Suite C24, Brewster, NY 10509 Tel: 845.278.7710 Fax: 845.278.7750 www.adelaidellc.com

ASBESTOS REPORT FORM

PROJECT NUMBER: 44080
PROJECT LOCATION: Provide Roofing and Siding
Training, Maintenance and Garage Buildings
MacCormick Secure Center
300 South Road
Brooktondale, NY 14817

DATE RECEIVED: 08/29/11
DATE COMPLETED: 09/01/11
DATE REPORTED: 09/23/11
TOTAL SAMPLE COUNT: 36
SAMPLE COLLECTOR(S): James Reber

SERVICES PROVIDED Asbestos Bulk Sampling

PESHOGS NO.	LAB ID NO.	SAMPLE LOCATION, COORDINATES DESCRIPTION AND OTHER COMMENTS	MATERIAL TYPE	TYPE OF ASBESTOS	PLM %	TEM %
11175.00 12	211092092-02	Maintenance Shop Bldg. #6 - Roof - Red Roof Shingles	Miscellaneous		NAD	NAD
11175.00 13	211092092-03	Maintenance Shop Bldg. #6 - Roof - Tar Paper on Deck (wood)	Miscellaneous		NAD	NAD
11175.00 14	211092092-04	Maintenance Shop Bldg. #6 - Roof - Tar Paper on Deck (wood)	Miscellaneous		NAD	NAD
11175.00 15	211092092-05	Maintenance Shop Bldg. #6 - Roof - Chimney Flashing Tar	Miscellaneous		NAD	NAD
11175.00 16	211092092-06	Maintenance Shop Bldg. #6 - Roof - Chimney Flashing Tar	Miscellaneous		NAD	NAD
11175.00 17	211092092-07	Maintenance Shop Bldg. #6 - 1st Floor Paint Supply Room - Drywall	Miscellaneous		NAD	NA
11175.00 18	211092092-08	Maintenance Shop Bldg. #6 - 1st Floor Paint Supply Room - Drywall	Miscellaneous		NAD	NA
11175.00 19	211092092-09	Maintenance Shop Bldg. #6 - 1st Floor Paint Supply Room - Joint Compound	Miscellaneous		NAD	NA
11175.00 20	211092092-10	Maintenance Shop Bldg. #6 - 1st Floor Paint Supply Room - Joint Compound	Miscellaneous		NAD	NA
11175.00 21	211092092-11	Maintenance Shop Bldg. #6 - Exterior - Window Glazing Compound	Miscellaneous	Anthophyllite	NAD	Trace
11175.00 22	211092092-12	Maintenance Shop Bldg. #6 - Exterior - Window Glazing Compound	Miscellaneous	Anthophyllite	NAD	Trace

Provide Roofing and Siding
Building #'s 6, 7 13
MacCormick SC
Brooktondale, NY

NA - Not Analyzed by Method
NA/PS - Not Analyzed, Positive Stop
NAD - No Asbestos Detected
Trace/NAD - Non-Asbestos by Definition

Adelaide
Environmental Health Associates, Inc.
1511 Route 22, Suite C24, Brewster, NY 10509 Tel: 845.278.7710 Fax: 845.278.7750 www.adelaidellc.com

ASBESTOS REPORT FORM

PROJECT NUMBER: 44080
PROJECT LOCATION: Provide Roofing and Siding
Training, Maintenance and Garage Buildings
MacCormick Secure Center
300 South Road
Brooktondale, NY 14817

DATE RECEIVED: 08/29/11
DATE COMPLETED: 09/01/11
DATE REPORTED: 09/23/11
TOTAL SAMPLE COUNT: 36
SAMPLE COLLECTOR(S): James Reber

SERVICES PROVIDED Asbestos Bulk Sampling

PESHOGS NO.	LAB ID NO.	SAMPLE LOCATION, COORDINATES DESCRIPTION AND OTHER COMMENTS	MATERIAL TYPE	TYPE OF ASBESTOS	PLM %	TEM %
11175.00 23	211092092-13	Maintenance Shop Bldg. #6 - Exterior - Door Caulk (Old Brittle)	Miscellaneous		NAD	NAD
11175.00 24	211092092-14	Maintenance Shop Bldg. #6 - Exterior - Door Caulk (Old Brittle)	Miscellaneous		NAD	NAD
11175.00 25	211092093-01	Garage Building #13 - Roof - Roofing Shingles	Miscellaneous		NAD	NAD
11175.00 26	211092093-02	Garage Building #13 - Roof - Roofing Shingles	Miscellaneous	Chrysotile	<0.25	Trace
11175.00 27	211092093-03	Garage Building #13 - Roof - Tar Paper Under Shingles on Cedar	Miscellaneous		NAD	NAD
11175.00 28	211092093-04	Garage Building #13 - Roof - Tar Paper Under Shingles on Cedar	Miscellaneous		NAD	NAD
11175.00 29	211092093-05	Garage Building #13 - Exterior - Window Glazing Compound	Miscellaneous		NAD	NAD
11175.00 30	211092093-06	Garage Building #13 - Exterior - Window Glazing Compound	Miscellaneous		NAD	NAD
11175.00 31	211092093-07	Garage Building #13 - Exterior - Caulk @ Concrete Foundation	Miscellaneous		NAD	NAD
11175.00 32	211092093-08	Garage Building #13 - Exterior - Caulk @ Concrete Foundation	Miscellaneous		NAD	NAD
11175.00 33	211092093-09	Garage Building #13 - 1st Floor - Interior by Windows - Drywall	Miscellaneous		NAD	NA

NA - Not Analyzed by Method
NA/PS - Not Analyzed, Positive Stop
NAD - No Asbestos Detected
Trace/NAD - Non-Asbestos by Definition

Adelaide
Environmental Health Associates, Inc.
1511 Route 22, Suite C24, Brewster, NY 10509 Tel: 845.278.7710 Fax: 845.278.7750 www.adelaidellc.com

ASBESTOS REPORT FORM

PROJECT NUMBER: 44080
PROJECT LOCATION: Provide Roofing and Siding
Training, Maintenance and Garage Buildings
MacCormick Secure Center
300 South Road
Brooktondale, NY 14817

DATE RECEIVED: 08/29/11
DATE COMPLETED: 09/01/11
DATE REPORTED: 09/23/11
TOTAL SAMPLE COUNT: 36
SAMPLE COLLECTOR(S): James Reber

SERVICES PROVIDED Asbestos Bulk Sampling

PESHOGS NO.	LAB ID NO.	SAMPLE LOCATION, COORDINATES DESCRIPTION AND OTHER COMMENTS	MATERIAL TYPE	TYPE OF ASBESTOS	PLM %	TEM %
11175.00 34	211092093-10	Garage Building #13 - 1st Floor - Interior by Windows - Drywall	Miscellaneous		NAD	NA
11175.00 35	211092093-11	Garage Building #13 - 1st Floor - Joint Compound	Miscellaneous		NAD	NA
11175.00 36	211092093-12	Garage Building #13 - 1st Floor - Joint Compound	Miscellaneous		NAD	NA

NA - Not Analyzed by Method
NA/PS - Not Analyzed, Positive Stop
NAD - No Asbestos Detected
Trace/NAD - Non-Asbestos by Definition

AmeriSci Job #: **211092093**

Client Name: Adelaide Environmental Health

Table I
Summary of Bulk Asbestos Analysis Results

OGS:11175.00-IN; MacCormick Secure Center; 300 South Road, Brooktondale, NY 14817; Building #13 - Garage

AmeriSci Sample #	Client Sample#	HG Area	Sample Weight (gram)	Heat Sensitive Organic %	Acid Soluble Inorganic %	Insoluble Non-Asbestos Inorganic %	** Asbestos % by PLM/DS	** Asbestos % by TEM
01	1	1	0.309	61.2	3.9	35.0	NAD	NAD
Location: R Level, Roofing Shingles								
02	2	1	0.502	83.3	3.0	13.6	Chrysotile <0.25	Chrysotile Trace
Location: R Level, Roofing Shingles								
03	3	2	0.193	97.9	1.0	1.0	NAD	NAD
Location: R Level, Tar Paper Under Shingles On Cedar								
04	4	2	0.156	98.1	0.6	1.3	NAD	NAD
Location: R Level, Tar Paper Under Shingles On Cedar								
05	5	3	0.497	10.7	81.3	8.0	NAD	NAD
Location: G Level, Window Glazing Compound								
06	6	3	0.389	12.3	80.7	6.9	NAD	NAD
Location: G Level, Window Glazing Compound								
07	7	4	0.369	47.2	46.1	6.8	NAD	NAD
Location: G Level, Caulk @ Concrete Foundation								
08	8	4	0.386	46.9	31.1	22.0	NAD	NAD
Location: G Level, Caulk @ Concrete Foundation								
09	9	5	—	—	—	—	NAD	NA
Location: 1st Floor, Interior By Windows - Drywall								
10	10	5	—	—	—	—	NAD	NA
Location: 1st Floor, Interior By Windows - Drywall								
11	11	6	—	—	—	—	NAD	NA
Location: 1st Floor, Interior By Windows - Joint Compound								
12	12	6	—	—	—	—	NAD	NA
Location: 1st Floor, Interior By Windows - Joint Compound								

See Reporting notes on last page

AmeriSci Job #: **211092093**

Client Name: Adelaide Environmental Health

Table I
Summary of Bulk Asbestos Analysis Results

OGS:11175.00-IN; MacCormick Secure Center; 300 South Road, Brooktondale, NY 14817; Building #13 - Garage

AmeriSci Sample #	Client Sample#	HG Area	Sample Weight (gram)	Heat Sensitive Organic %	Acid Soluble Inorganic %	Insoluble Non-Asbestos Inorganic %	** Asbestos % by PLM/DS	** Asbestos % by TEM

Analyzed by: Marik Peysakhov_____; Date Analyzed 9/11/2011

**Quantitative Analysis (Semi/Full): Bulk Asbestos Analysis - PLM by EPA 600/M4-82-020 per 40 CFR or ELAP 198.1 for New York friable samples or ELAP 198.6 for New York NOB samples; TEM (Semi/Full) by EPA 600/R-93/116 (not covered by NVLAP Bulk accreditation) or ELAP 198.4; for New York samples; NAD = no asbestos detected during a quantitative analysis; NA = not analyzed; Trace = <1%; Quantitation for beginning weights of <0.1 grams should be considered as qualitative only; Qualitative Analysis: Asbestos analysis results of "Present" or "NVA = No Visible Asbestos" represents results for Qualitative PLM or TEM Analysis only (no accreditation coverage available from any regulatory agency for qualitative analyses); AIHA Lab # 102843, NVLAP Lab Code 200546-0, NYSDOH ELAP Lab ID#11480.

Warning Note: PLM limitation, only TEM will resolve fibers <0.25 micrometers in diameter. TEM bulk analysis is representative of the fine grained matrix material and may not be representative of non-uniformly dispersed debris for which PLM evaluation is recommended (i.e. soils and other heterogenous materials).

Reviewed By:_____

AmeriSci New York
117 EAST 30TH ST.
NEW YORK, NY 10016
TEL: (212) 679-8600 • FAX: (212) 679-3114

PLM Bulk Asbestos Report

Adelaide Environmental Health
Attn: John Soter
1511 Rte. 22 Suite C24

Brewster, NY 10509

Date Received 09/10/11 **AmeriSci Job #** 211092093
Date Examined 09/10/11 **P.O. #**
ELAP # 11480 **Page** 1 **of** 3
RE: OGS:11175.00-IN; MacCormick Secure Center; 300 South Road, Brooktondale, NY 14817; Building #13 - Garage

Client No. / HGA	Lab No.	Asbestos Present	Total % Asbestos
1 1	211092093-01 **Location:** R Level, Roofing Shingles **Analyst Description:** Black, Homogeneous, Fibrous, Bulk Material **Asbestos Types:** **Other Material:** Non-fibrous 35 %	*No*	NAD (by NYS ELAP 198.6) by Madell E. Collins on 09/10/11
2 1	211092093-02 **Location:** R Level, Roofing Shingles **Analyst Description:** Black, Homogeneous, Fibrous, Bulk Material **Asbestos Types:** Chrysotile <0.25 % pc **Other Material:** Non-fibrous 13.7 %	*Yes*	Trace (<0.25 % pc) (ELAP 198.6; 400pc) by Madell E. Collins on 09/10/11
3 2	211092093-03 **Location:** R Level, Tar Paper Under Shingles On Cedar **Analyst Description:** Black, Homogeneous, Fibrous, Bulk Material **Asbestos Types:** **Other Material:** Non-fibrous 1 %	*No*	NAD (by NYS ELAP 198.6) by Madell E. Collins on 09/10/11
4 2	211092093-04 **Location:** R Level, Tar Paper Under Shingles On Cedar **Analyst Description:** Black, Homogeneous, Fibrous, Bulk Material **Asbestos Types:** **Other Material:** Non-fibrous 1.3 %	*No*	NAD (by NYS ELAP 198.6) by Madell E. Collins on 09/10/11
5 3	211092093-05 **Location:** G Level, Window Glazing Compound **Analyst Description:** Grey, Homogeneous, Non-Fibrous, Bulk Material **Asbestos Types:** **Other Material:** Fibrous Talc 1 %, Non-fibrous 7 %	*No*	NAD (by NYS ELAP 198.6) by Madell E. Collins on 09/10/11

See Reporting notes on last page

AmeriSci Job #: **211092093**
Client Name: Adelaide Environmental Health

PLM Bulk Asbestos Report

OGS:11175.00-IN; MacCormick Secure Center; 300 South Road, Brooktondale, NY 14817; Building #13 - Garage

Client No. / HGA	Lab No.	Asbestos Present	Total % Asbestos
6 3	211092093-06 **Location:** G Level, Window Glazing Compound **Analyst Description:** Grey, Homogeneous, Non-Fibrous, Bulk Material **Asbestos Types:** **Other Material:** Fibrous Talc 1 %, Non-fibrous 5.9 %	*No*	NAD (by NYS ELAP 198.6) by Madell E. Collins on 09/10/11
7 4	211092093-07 **Location:** G Level, Caulk @ Concrete Foundation **Analyst Description:** Grey/White, Homogeneous, Non-Fibrous, Bulk Material **Asbestos Types:** **Other Material:** Non-fibrous 6.8 %	*No*	NAD (by NYS ELAP 198.6) by Madell E. Collins on 09/10/11
8 4	211092093-08 **Location:** G Level, Caulk @ Concrete Foundation **Analyst Description:** Grey/White, Homogeneous, Non-Fibrous, Bulk Material **Asbestos Types:** **Other Material:** Non-fibrous 22 %	*No*	NAD (by NYS ELAP 198.6) by Madell E. Collins on 09/10/11
9 5	211092093-09 **Location:** 1st Floor, Interior By Windows - Drywall **Analyst Description:** Grey/Tan, Heterogeneous, Fibrous, Bulk Material **Asbestos Types:** **Other Material:** Cellulose 10 %, Non-fibrous 90 %	*No*	NAD (by NYS ELAP 198.1) by Madell E. Collins on 09/10/11
10 5	211092093-10 **Location:** 1st Floor, Interior By Windows - Drywall **Analyst Description:** Grey/Tan, Heterogeneous, Fibrous, Bulk Material **Asbestos Types:** **Other Material:** Cellulose 1 %, Non-fibrous 99 %	*No*	NAD (by NYS ELAP 198.1) by Madell E. Collins on 09/11/11
11 6	211092093-11 **Location:** 1st Floor, Interior By Windows - Joint Compound **Analyst Description:** White, Homogeneous, Non-Fibrous, Bulk Material **Asbestos Types:** **Other Material:** Non-fibrous 100 %	*No*	NAD (by NYS ELAP 198.1) by Madell E. Collins on 09/11/11

See Reporting notes on last page

AmeriSci Job #: **211092093**
Client Name: Adelaide Environmental Health

PLM Bulk Asbestos Report

OGS:11175.00-IN; MacCormick Secure Center; 300 South Road, Brooktondale, NY 14817; Building #13 - Garage

Client No. / HGA	Lab No.	Asbestos Present	Total % Asbestos
12 6	211092093-12 **Location:** 1st Floor, Interior By Windows - Joint Compound	*No*	NAD (by NYS ELAP 198.1) by Madell E. Collins on 09/11/11

Analyst Description: White, Heterogeneous, Non-Fibrous, Bulk Material
Asbestos Types:
Other Material: Non-fibrous 100 %

Reporting Notes:
Analyzed by: Madell E. Collins

*NAD/NSD =no asbestos detected; NA =not analyzed; NA/PS=not analyzed/positive stop; PLM Bulk Asbestos Analysis by EPA 600/M4-82-020 per 40 CFR 763 (NVLAP Lab Code 200546-0), ELAP PLM Method 198.1 for NY friable samples or 198.6 for NOB samples (NY ELAP Lab ID11480); Note:PLM is not consistently reliable in detecting asbestos in floor coverings and similar non-friable organically bound materials. NAD or Trace results by PLM are inconclusive, TEM is currently the only method that can be used to determine if this material can be considered or treated as non asbestos-containing in NY State (also see EPA Advisory for floor tile, FR 59,146,38970,8/1/94) National Institute of Standards and Technology Accreditation requirements mandate that this report must not be reproduced except in full without the approval of the lab.This PLM report relates ONLY to the items tested. AIHA Lab # 102843, RI Cert#AAL-094, CT Cert#PH-0186, Mass Cert#AA000054.

Reviewed By:_____ END OF REPORT

Adelaide Environmental Health Associates, Inc
1511 Rte. 22, Suite C24
Brewster, NY 10509
845-278-7710
845-278-7750 - fax

211092093

Site Address: MacCormick Secure Center	Date: 09/01/11	Inspector(s) James Reber
300 South Road	BUILDING #13 - GARAGE	
Brooktondale, NY 14817	Project #: OGS:11175.00-IN	

Sample ID	Homogeneous Area	Floor Level	Sample Location/Description	Quantity (In Feet)	Friable Non-Friable	Condition g, d, sd
1	1	R	ROOFING SHINGLES	2000 SF	NF	SD
2	1	R	↓	↓	↓	↓
3	2	R	TAR PAPER UNDER SHINGLES ON CEDAR	↓	↓	↓
4	2	R	↓			
5	3	G	WINDOW GLAZING COMPOUND	50 LF	NF	SD
6	3	G	↓	"	"	"
7	4	G	CAULK @ CONCRETE FOUNDATION	100 LF	NF	D
8	4	G	↓	"	"	"
9	5	1	INTERIOR BY WINDOWS - DRYWALL	500 SF	F	D
10	5	1	↓ - ↓	↓	↓	↓
11	6	1	- JOINT COMPOUND	↓	↓	↓
12	6	1	↓ - ↓			

Special Instructions/ Turnaround Time:

24 hr TAT

Stop at 1st Positive per Homogenous Area
Fax Results to 845-278-7750
E-mail Results to AdelaideLabResults@adelaidellc.com

Relinquished by: [signature] 9/10/11 0852
Received by:
Relinquished by:
Received by:

OGS Project No. 44080

AmeriSci Job #: **211092092**

Client Name: Adelaide Environmental Health

09/11/2011 17:22 2126793114 AMERISCI

Table I
Summary of Bulk Asbestos Analysis Results

OGS:11175.00-IN; MacCormick Secure Center; 300 South Road, Brooktondale, NY 14817; Maintenance Shop - Bldg. #6

AmeriSci Sample #	Client Sample#	HG Area	Sample Weight (gram)	Heat Sensitive Organic %	Acid Soluble Inorganic %	Insoluble Non-Asbestos Inorganic %	** Asbestos % by PLM/DS	** Asbestos % by TEM
01	1	1	0.447	22.6	42.5	34.9	NAD	NAD
Location: R Level, Red Roof Shingles								
02	2	1	0.317	24.3	38.8	36.9	NAD	NAD
Location: R Level, Red Roof Shingles								
03	3	2	0.196	98.5	0.5	1.0	NAD	NAD
Location: R Level, Tar Paper On Deck (Wood)								
04	4	2	0.123	97.6	1.6	0.8	NAD	NAD
Location: R Level, Tar Paper On Deck (Wood)								
05	5	3	0.340	28.8	67.4	3.8	NAD	NAD
Location: R Level, Chimney - Flashing Tar								
06	6	3	0.699	30.3	64.4	5.3	NAD	NAD
Location: R Level, Chimney - Flashing Tar								
07	7	4	—	—	—	—	NAD	NA
Location: 1st Floor, Paint Supply Rm. - Drywall								
08	8	4	—	—	—	—	NAD	NA
Location: 1st Floor, Paint Supply Rm. - Drywall								
09	9	5	—	—	—	—	NAD	NA
Location: 1st Floor, Paint Supply Rm. - Joint Compound								
10	10	5	—	—	—	—	NAD	NA
Location: 1st Floor, Paint Supply Rm. - Joint Compound								
11	11	6	0.271	17.7	73.8	8.4	NAD	Anthophyllite Trace
Location: G Floor, Exterior - Window Glazing Compound								
12	12	6	0.506	13.2	74.5	12.2	NAD	Anthophyllite Trace
Location: G Floor, Exterior - Window Glazing Compound								
13	13	7	0.216	34.3	44.9	20.8	NAD	NAD
Location: G Floor, Exterior - Door Caulk (Old Brittle)								
14	14	7	0.220	37.3	19.5	43.2	NAD	NAD
Location: G Floor, Exterior - Door Caulk (Old Brittle)								

See Reporting notes on last page

AmeriSci Job #: 211092092

Client Name: Adelaide Environmental Health

Table I
Summary of Bulk Asbestos Analysis Results

OGS:11175.00-IN; MacCormick Secure Center; 300 South Road, Brooktondale, NY 14817; Maintenance Shop - Bldg. #6

AmeriSci Sample #	Client Sample#	HG Area	Sample Weight (gram)	Heat Sensitive Organic %	Acid Soluble Inorganic %	Insoluble Non-Asbestos Inorganic %	** Asbestos % by PLM/DS	** Asbestos % by TEM

Analyzed by: Marik Peysakhov_____; Date Analyzed 9/11/2011

**Quantitative Analysis (Semi/Full); Bulk Asbestos Analysis - PLM by EPA 600/M4-82-020 per 40 CFR or ELAP 198.1 for New York friable samples or ELAP 198.6 for New York NOB samples; TEM (Semi/Full) by EPA 600/R-93/116 (not covered by NVLAP Bulk accreditation) or ELAP 198.4; for New York samples; NAD = no asbestos detected during a quantitative analysis; NA = not analyzed; Trace = <1%; Quantitation for beginning weights of <0.1 grams should be considered as qualitative only; Qualitative Analysis: Asbestos analysis results of "Present" or "NVA = No Visible Asbestos" represents results for Qualitative PLM or TEM Analysis only (no accreditation coverage available from any regulatory agency for qualitative analyses); AIHA Lab # 102843, NVLAP Lab Code 200546-0, NYSDOH ELAP Lab ID#11480.

Warning Note: PLM limitation, only TEM will resolve fibers <0.25 micrometers in diameter. TEM bulk analysis is representative of the fine grained matrix material and may not be representative of non-uniformly dispersed debris for which PLM evaluation is recommended (i.e. soils and other heterogenous materials).

Reviewed By:_____

AmeriSci New York
117 EAST 30TH ST.
NEW YORK, NY 10016
TEL: (212) 679-8600 • FAX: (212) 679-3114

PLM Bulk Asbestos Report

Adelaide Environmental Health
Attn: John Soter
1511 Rte. 22 Suite C24

Brewster, NY 10509

Date Received 09/10/11 **AmeriSci Job #** 211092092
Date Examined 09/11/11 **P.O. #**
ELAP # 11480 **Page** 1 **of** 3
RE: OGS:11175.00-IN; MacCormick Secure Center; 300 South Road, Brooktondale, NY 14817; Maintenance Shop - Bldg. #6

Client No. / HGA	Lab No.	Asbestos Present	Total % Asbestos
1 1	211092092-01 **Location:** R Level, Red Roof Shingles **Analyst Description:** Black, Homogeneous, Fibrous, Bulk Material **Asbestos Types:** **Other Material:** Fibrous glass 5 %, Non-fibrous 29.9 %	*No*	NAD (by NYS ELAP 198.6) by Madell E. Collins on 09/11/11
2 1	211092092-02 **Location:** R Level, Red Roof Shingles **Analyst Description:** Black, Homogeneous, Fibrous, Bulk Material **Asbestos Types:** **Other Material:** Fibrous glass 5 %, Non-fibrous 31.9 %	*No*	NAD (by NYS ELAP 198.6) by Madell E. Collins on 09/11/11
3 2	211092092-03 **Location:** R Level, Tar Paper On Deck (Wood) **Analyst Description:** Black, Homogeneous, Fibrous, Bulk Material **Asbestos Types:** **Other Material:** Non-fibrous 1 %	*No*	NAD (by NYS ELAP 198.6) by Madell E. Collins on 09/11/11
4 2	211092092-04 **Location:** R Level, Tar Paper On Deck (Wood) **Analyst Description:** Black, Homogeneous, Fibrous, Bulk Material **Asbestos Types:** **Other Material:** Non-fibrous 0.8 %	*No*	NAD (by NYS ELAP 198.6) by Madell E. Collins on 09/11/11
5 3	211092092-05 **Location:** R Level, Chimney - Flashing Tar **Analyst Description:** Black, Homogeneous, Non-Fibrous, Bulk Material **Asbestos Types:** **Other Material:** Non-fibrous 3.8 %	*No*	NAD (by NYS ELAP 198.6) by Madell E. Collins on 09/11/11

See Reporting notes on last page

AmeriSci Job #: **211092092**
Client Name: Adelaide Environmental Health

PLM Bulk Asbestos Report

OGS:11175.00-IN; MacCormick Secure Center; 300 South Road, Brooktondale, NY 14817; Maintenance Shop - Bldg. #6

Client No. / HGA	Lab No.	Asbestos Present	Total % Asbestos
6 3	211092092-06 **Location:** R Level, Chimney - Flashing Tar **Analyst Description:** Black, Homogeneous, Non-Fibrous, Bulk Material **Asbestos Types:** **Other Material:** Non-fibrous 5.3 %	*No*	NAD (by NYS ELAP 198.6) by Madell E. Collins on 09/11/11
7 4	211092092-07 **Location:** 1st Floor, Paint Supply Rm. - Drywall **Analyst Description:** Grey, Homogeneous, Fibrous, Bulk Material **Asbestos Types:** **Other Material:** Cellulose Trace, Non-fibrous 100 %	*No*	NAD (by NYS ELAP 198.1) by Madell E. Collins on 09/11/11
8 4	211092092-08 **Location:** 1st Floor, Paint Supply Rm. - Drywall **Analyst Description:** Grey/Tan, Heterogeneous, Fibrous, Bulk Material **Asbestos Types:** **Other Material:** Cellulose 3 %, Non-fibrous 97 %	*No*	NAD (by NYS ELAP 198.1) by Madell E. Collins on 09/11/11
9 5	211092092-09 **Location:** 1st Floor, Paint Supply Rm. - Joint Compound **Analyst Description:** White, Homogeneous, Non-Fibrous, Bulk Material **Asbestos Types:** **Other Material:** Non-fibrous 100 %	*No*	NAD (by NYS ELAP 198.1) by Madell E. Collins on 09/11/11
10 5	211092092-10 **Location:** 1st Floor, Paint Supply Rm. - Joint Compound **Analyst Description:** White, Homogeneous, Non-Fibrous, Bulk Material **Asbestos Types:** **Other Material:** Non-fibrous 100 %	*No*	NAD (by NYS ELAP 198.1) by Madell E. Collins on 09/11/11
11 6	211092092-11 **Location:** G Floor, Exterior - Window Glazing Compound **Analyst Description:** White, Homogeneous, Non-Fibrous, Bulk Material **Asbestos Types:** **Other Material:** Non-fibrous 8.5 %	*No*	NAD (by NYS ELAP 198.6) by Madell E. Collins on 09/11/11

See Reporting notes on last page

AmeriSci Job #: **211092092**
Client Name: Adelaide Environmental Health

PLM Bulk Asbestos Report

OGS:11175.00-IN; MacCormick Secure Center; 300 South Road, Brooktondale, NY 14817; Maintenance Shop - Bldg. #6

Client No. / HGA	Lab No.	Asbestos Present	Total % Asbestos
12 6	211092092-12 **Location:** G Floor, Exterior - Window Glazing Compound **Analyst Description:** White, Homogeneous, Non-Fibrous, Bulk Material **Asbestos Types:** **Other Material:** Non-fibrous 12.3 %	*No*	NAD (by NYS ELAP 198.6) by Madell E. Collins on 09/11/11
13 7	211092092-13 **Location:** G Floor, Exterior - Door Caulk (Old Brittle) **Analyst Description:** Red/White, Homogeneous, Non-Fibrous, Bulk Material **Asbestos Types:** **Other Material:** Non-fibrous 20.8 %	*No*	NAD (by NYS ELAP 198.6) by Madell E. Collins on 09/11/11
14 7	211092092-14 **Location:** G Floor, Exterior - Door Caulk (Old Brittle) **Analyst Description:** Red/White, Homogeneous, Non-Fibrous, Bulk Material **Asbestos Types:** **Other Material:** Non-fibrous 43.2 %	*No*	NAD (by NYS ELAP 198.6) by Madell E. Collins on 09/11/11

Reporting Notes:
Analyzed by: Madell E. Collins Madell E. Collins
*NAD/NSD =no asbestos detected; NA =not analyzed; NA/PS=not analyzed/positive stop; PLM Bulk Asbestos Analysis by EPA 600/M4-82-020 per 40 CFR 763 (NVLAP Lab Code 200546-0), ELAP PLM Method 198.1 for NY friable samples or 198.6 for NOB samples (NY ELAP Lab ID11480); Note:PLM is not consistently reliable in detecting asbestos in floor coverings and similar non-friable organically bound materials. NAD or Trace results by PLM are inconclusive, TEM is currently the only method that can be used to determine if this material can be considered or treated as non asbestos-containing in NY State (also see EPA Advisory for floor tile, FR 59,146,38970,8/1/94) National Institute of Standards and Technology Accreditation requirements mandate that this report must not be reproduced except in full without the approval of the lab.This PLM report relates ONLY to the items tested. AIHA Lab # 102843, RI Cert#AAL-094, CT Cert#PH-0186, Mass Cert#AA000054.

Reviewed By:_____ END OF REPORT

Adelaide Environmental Health Associates, Inc
1511 Rte. 22, Suite C24
Brewster, NY 10509
845-278-7710
845-278-7750 - fax

21 092092

09/11/2011 06:42 2126793114 AMERISCI

Site Address:	Date:	Inspector(s)
MacCormick Secure Center	09/01/11	James Reber
300 South Road	MAINTENANCE SHOP - BLDG #6	
Brooktondale, NY 14817	Project #: OGS:11175.00-IN	

Sample ID #	Homogen. Area	Floor Level	Sample Location/Description	Quantity (In Feet)	Friable "F" Non "NF"	Condition "G" "D" "SD"
1	1	R	RED ROOF SHINGLES	3200 SF	NF	G
2	1	R	↓	↓	↓	↓
3	2	R	TAR PAPER ON DECK (WOOD)			
4	2	R	↓			
5	3	R	CHIMNEY - FLASHING TAR			
6	3	R	↓ ↓	8LF	NF	D
7	4	1	PAINT SUPPLY RM - DRYWALL			
8	4	1	↓ ↓	500 SF	F	D
9	5	1	- JOINT COMPOUND	↓	↓	↓
10	5	1	↓ ↓			
11	6	G	EXTERIOR - WINDOW GLAZING COMPOUND			
12	6	G	↓ ↓	3SF	NF	SD
13	7	G	↓ - DOOR CAULK (OLD BRITTLE)	↓	↓	↓

Special Instructions/ Turnaround Time:

Stop at 1st Positive per Homogenous Area
Fax Results to 845-278-7750
E-mail Results to AdelaideLabResults@adelaidellc.com

24 hr TAT

Relinquished by:
Received by:
Relinquished by: 9/10/11 0852
Received by:

OGS Project No. 44080

Adelaide Environmental Health Associates, Inc
1511 Rte. 22, Suite C24
Brewster, NY 10509
845-278-7710
845-278-7750 - fax

31-092092

09/11/2011 06:42 2126793114 AMERISCI

Site Address:	Date:	Inspector(s)
MacCormick Secure Center	09/01/11	James Reber
300South Road	MAINTENANCE SHOP #6	
Brooktondale, NY 14817	Project #: OGS:11175.00-IN	

Sample ID #	Homogeneous Area	Floor Level	Sample Location/Description	Quantity (In Feet)	Friable NonFriable	Condition g, p, s
14	7	G	EXTERIOR - DOOR CAULK (OLD PUTTY)			

Special Instructions/ Turnaround Time:

24 hr TAT

Stop at 1st Positive per Homogenous Area
Fax Results to 845-278-7750
E-mail Results to AdelaideLabResults@adelaidellc.com

Relinquished by:
Received by:
Relinquished by: 9/10/11 0852
Received by:

OGS Project No. 44080

AmeriSci Job #: 211092091

Client Name: Adelaide Environmental Health

09/11/2011 17:23 2126793114 AMERISCI

Table I
Summary of Bulk Asbestos Analysis Results

OGS:11175.00-IN; MacCormick Secure Center; 300 South Road, Brooktondale, NY 14817; Training Bldg. #7

AmeriSci Sample #	Client Sample#	HG Area	Sample Weight (gram)	Heat Sensitive Organic %	Acid Soluble Inorganic %	Insoluble Non-Asbestos Inorganic %	** Asbestos % by PLM/DS	** Asbestos % by TEM
01	1	1	0.291	51.9	7.6	40.5	NAD	NAD
Location:	R Level, Brown Roof Shingles							
02	2	1	0.283	56.9	2.8	40.3	NAD	NAD
Location:	R Level, Brown Roof Shingles							
03	3	2	0.194	99.0	0.5	0.5	NAD	NAD
Location:	R Level, Tar Paper On Deck							
04	4	2	0.214	99.1	0.5	0.5	NAD	NAD
Location:	R Level, Tar Paper On Deck							
05	5	3	0.152	76.3	17.1	6.6	NAD	NAD
Location:	R Level, Heavy Weight Tar Paper							
06	6	3	0.201	73.1	20.9	6.0	NAD	NAD
Location:	R Level, Heavy Weight Tar Paper							
07	7	4	—	—	—	—	NAD	NA
Location:	1st Floor, Office - Drywall							
08	8	4	—	—	—	—	NAD	NA
Location:	1st Floor, Office - Drywall							
09	9	5	—	—	—	—	NAD	NA
Location:	1st Floor, Office - Joint Compound							
10	10	5	—	—	—	—	NAD	NA
Location:	1st Floor, Office - Joint Compound							

Analyzed by: Marik Peysakhov_____; Date Analyzed 9/11/2011

**Quantitative Analysis (Semi/Full); Bulk Asbestos Analysis - PLM by EPA 600/M4-82-020 per 40 CFR or ELAP 198.1 for New York friable samples or ELAP 198.6 for New York NOB samples; TEM (Semi/Full) by EPA 600/R-93/116 (not covered by NVLAP Bulk accreditation) or ELAP 198.4; for New York samples; NAD = no asbestos detected during a quantitative analysis; NA = not analyzed; Trace = <1%; Quantitation for beginning weights of <0.1 grams should be considered as qualitative only; Qualitative Analysis: Asbestos analysis results of "Present" or "NVA = No Visible Asbestos" represents results for Qualitative PLM or TEM Analysis only (no accreditation coverage available from any regulatory agency for qualitative analyses); AIHA Lab # 102843, NVLAP Lab Code 200546-0, NYSDOH ELAP Lab ID#11480.

Warning Note: PLM limitation, only TEM will resolve fibers <0.25 micrometers in diameter. TEM bulk analysis is representative of the fine grained matrix material and may not be representative of non-uniformly dispersed debris for which PLM evaluation is recommended (i.e. soils and other heterogenous materials).

Reviewed By:_____

AmeriSci New York
117 EAST 30TH ST.
NEW YORK, NY 10016
TEL: (212) 679-8600 • FAX: (212) 679-3114

PLM Bulk Asbestos Report

Adelaide Environmental Health
Attn: John Soter
1511 Rte. 22 Suite C24

Brewster, NY 10509

Date Received 09/10/11 **AmeriSci Job #** 211092091
Date Examined 09/11/11 **P.O. #**
ELAP # 11480 **Page** 1 **of** 3
RE: OGS:11175.00-IN; MacCormick Secure Center; 300 South Road, Brooktondale, NY 14817; Training Bldg. #7

Client No. / HGA	Lab No.	Asbestos Present	Total % Asbestos
1 1	211092091-01 **Location:** R Level, Brown Roof Shingles **Analyst Description:** Black, Homogeneous, Fibrous, Bulk Material **Asbestos Types:** **Other Material:** Non-fibrous 40.5 %	*No*	NAD (by NYS ELAP 198.6) by Madell E. Collins on 09/11/11
2 1	211092091-02 **Location:** R Level, Brown Roof Shingles **Analyst Description:** Black, Homogeneous, Fibrous, Bulk Material **Asbestos Types:** **Other Material:** Non-fibrous 40.3 %	*No*	NAD (by NYS ELAP 198.6) by Madell E. Collins on 09/11/11
3 2	211092091-03 **Location:** R Level, Tar Paper On Deck **Analyst Description:** Black, Homogeneous, Fibrous, Bulk Material **Asbestos Types:** **Other Material:** Non-fibrous 0.5 %	*No*	NAD (by NYS ELAP 198.6) by Madell E. Collins on 09/11/11
4 2	211092091-04 **Location:** R Level, Tar Paper On Deck **Analyst Description:** Black, Homogeneous, Fibrous, Bulk Material **Asbestos Types:** **Other Material:** Non-fibrous 0.5 %	*No*	NAD (by NYS ELAP 198.6) by Madell E. Collins on 09/11/11
5 3	211092091-05 **Location:** R Level, Heavy Weight Tar Paper **Analyst Description:** Black, Homogeneous, Fibrous, Bulk Material **Asbestos Types:** **Other Material:** Non-fibrous 6.6 %	*No*	NAD (by NYS ELAP 198.6) by Madell E. Collins on 09/11/11

See Reporting notes on last page

AmeriSci Job #: **211092091**
Client Name: Adelaide Environmental Health

PLM Bulk Asbestos Report

OGS:11175.00-IN; MacCormick Secure Center; 300 South Road, Brooktondale, NY 14817; Training Bldg. #7

Client No. / HGA	Lab No.	Asbestos Present	Total % Asbestos
6 3	211092091-06 **Location:** R Level, Heavy Weight Tar Paper **Analyst Description:** Black, Homogeneous, Fibrous, Bulk Material **Asbestos Types:** **Other Material:** Non-fibrous 6 %	***No***	NAD (by NYS ELAP 198.6) by Madell E. Collins on 09/11/11
7 4	211092091-07 **Location:** 1st Floor, Office - Drywall **Analyst Description:** Grey/Tan, Heterogeneous, Fibrous, Bulk Material **Asbestos Types:** **Other Material:** Cellulose 1 %, Fibrous glass Trace, Non-fibrous 99 %	***No***	NAD (by NYS ELAP 198.1) by Madell E. Collins on 09/11/11
8 4	211092091-08 **Location:** 1st Floor, Office - Drywall **Analyst Description:** Grey/Tan, Heterogeneous, Fibrous, Bulk Material **Asbestos Types:** **Other Material:** Cellulose 3 %, Fibrous glass Trace, Non-fibrous 97 %	***No***	NAD (by NYS ELAP 198.1) by Madell E. Collins on 09/11/11
9 5	211092091-09 **Location:** 1st Floor, Office - Joint Compound **Analyst Description:** White, Homogeneous, Non-Fibrous, Bulk Material **Asbestos Types:** **Other Material:** Non-fibrous 100 %	***No***	NAD (by NYS ELAP 198.1) by Madell E. Collins on 09/11/11
10 5	211092091-10 **Location:** 1st Floor, Office - Joint Compound **Analyst Description:** White, Homogeneous, Non-Fibrous, Bulk Material **Asbestos Types:** **Other Material:** Non-fibrous 100 %	***No***	NAD (by NYS ELAP 198.1) by Madell E. Collins on 09/11/11

See Reporting notes on last page

AmeriSci Job #: **211092091**
Client Name: Adelaide Environmental Health

PLM Bulk Asbestos Report

OGS:11175.00-IN; MacCormick Secure Center; 300 South Road, Brooktondale, NY 14817; Training Bldg. #7

Reporting Notes:

Analyzed by: Madell E. Collins

*NAD/NSD =no asbestos detected; NA =not analyzed; NA/PS=not analyzed/positive stop; PLM Bulk Asbestos Analysis by EPA 600/M4-82-020 per 40 CFR 763 (NVLAP Lab Code 200546-0), ELAP PLM Method 198.1 for NY friable samples or 198.6 for NOB samples (NY ELAP Lab ID11480); Note:PLM is not consistently reliable in detecting asbestos in floor coverings and similar non-friable organically bound materials. NAD or Trace results by PLM are inconclusive, TEM is currently the only method that can be used to determine if this material can be considered or treated as non asbestos-containing in NY State (also see EPA Advisory for floor tile, FR 59,146,38970,8/1/94) National Institute of Standards and Technology Accreditation requirements mandate that this report must not be reproduced except in full without the approval of the lab.This PLM report relates ONLY to the items tested. AIHA Lab # 102843, RI Cert#AAL-094, CT Cert#PH-0186, Mass Cert#AA000054.

Reviewed By:_____ END OF REPORT

Adelaide Environmental Health Associates, Inc
1511 Rte. 22, Suite C24
Brewster, NY 10509
845-278-7710
845-278-7750 - fax

211092091

09/11/2011 06:41 2126793114 AMERISCI

Site Address: MacCormick Secure Center
300South Road
Brooktondale, NY 14817

Date: 09/01/11
TRAINING BLDG #7
Project #: OGS:11175.00-IN

Inspector(s) James Reber

Sample ID #	Homogeneous Area	Floor Level	Sample Location/Description	Quantity (Feet)	Friable NonFriable	Condition
1	1	R	BROWN ROOF SHINGLES	3500	NF	D
2	1					
3	2		TAR PAPER ON DECK			
4	2					
5	3		HEAVY WEIGHT TAR PAPER			
6	3	R		1000SF	NF	SD
7	4	1	OFFICE - DRYWALL			
8	4	1		500SF	F	G
9	5	1	JOINT COMPOUND			
10	5	1				

Special Instructions/ Turnaround Time:

Stop at 1st Positive per Homogenous Area
Fax Results to 845-278-7750
E-mail Results to AdelaideLabResults@adelaidellc.com

24 hr TAT

Relinquished by:
Received by:
Relinquished by: 9/10/11 0812
Received by:

OGS Project No. 44080

APPENDIX B

LEAD BASED PAINT DATA SHEETS

Adelaide
Environmental Health Associates, Inc.
1511 Route 22, Suite C24, Brewster, NY 10509 Tel: 845.278.7710 Fax: 845.278.7750 www.adelaidellc.com

LEAD PAINT REPORT FORM

PROJECT NUMBER: 44080
PROJECT LOCATION: Provide Roofing and Siding
Training, Maintenance and Garage Buildings
MacCormick Secure Center
300 South Road
Brooktondale, NY 14817

DATE RECEIVED: 08/29/11
DATE COMPLETED: 09/01/11
DATE REPORTED: 09/22/11
TOTAL SAMPLE COUNT: 49
SAMPLE COLLECTOR(S): James Reber
XRF SERIAL NUMBER: 26378

SERVICES PROVIDED: Investigative Lead Paint Survey-XRF Survey

PESHOGS NO.	BLDG NUMBER	SAMPLE LOCATION, COORDINATES DESCRIPTION AND OTHER COMMENTS	COLOR	SUBSTRATE TYPE	XRF RESULT	Classification (Pos./Neg.)
11175.00 1L		SHUTTER_CAL			5.65	
11175.00 2L		SHUTTER_CAL			5.68	
11175.00 3L		CALIBRATION			0.9	Accept
11175.00 4L		CALIBRATION			1	Accept
11175.00 5L		CALIBRATION			0.9	Accept
11175.00 6L	bldg 13	WALL	RED	WOOD	0.08	Negative
11175.00 7L	bldg 13	WALL	RED	WOOD	0.05	Negative
11175.00 8L	bldg 13	WALL	RED	WOOD	0.02	Negative
11175.00 9L	bldg 13	WALL	RED	WOOD	0	Negative
11175.00 10L	bldg 13	WALL	RED	WOOD	0.09	Negative
11175.00 11L	bldg 13	WALL	RED	WOOD	0.13	Negative
11175.00 12L	bldg 13	WALL	RED	WOOD	< LOD	Negative
11175.00 13L	bldg 13	WALL	RED	WOOD	0.01	Negative

Adelaide
Environmental Health Associates, Inc.
1511 Route 22, Suite C24, Brewster, NY 10509 Tel: 845.278.7710 Fax: 845.278.7750 www.adelaidellc.com

LEAD PAINT REPORT FORM

PROJECT NUMBER: 44080
PROJECT LOCATION: Provide Roofing and Siding
Training, Maintenance and Garage Buildings
MacCormick Secure Center
300 South Road
Brooktondale, NY 14817

DATE RECEIVED: 08/29/11
DATE COMPLETED: 09/01/11
DATE REPORTED: 09/22/11
TOTAL SAMPLE COUNT: 49
SAMPLE COLLECTOR(S): James Reber
XRF SERIAL NUMBER: 26378

SERVICES PROVIDED: Investigative Lead Paint Survey-XRF Survey

PESHOGS NO.	BLDG NUMBER	SAMPLE LOCATION, COORDINATES DESCRIPTION AND OTHER COMMENTS	COLOR	SUBSTRATE TYPE	XRF RESULT	Classification (Pos./Neg.)
11175.00 14L	bldg 13	WALL	RED	WOOD	0.02	Negative
11175.00 15L	bldg 13	WINDOW FRAME	RED	WOOD	0.05	Negative
11175.00 16L	bldg 13	DOOR	WHITE	WOOD	0.7	Negative
11175.00 17L	bldg 13	DOOR	WHITE	WOOD	0.25	Negative
11175.00 18L	bldg 13	DOOR	WHITE	WOOD	0.08	Negative
11175.00 19L	bldg 13	DOOR	WHITE	WOOD	1	Null
11175.00 20L	bldg 13	DOOR	WHITE	WOOD	0.7	Negative
11175.00 21L	bldg 6	WALL	RED	WOOD	0.19	Negative
11175.00 22L	bldg 6	WALL	RED	WOOD	0.15	Negative
11175.00 23L	bldg 6	DOOR	WHITE	WOOD	0.3	Negative
11175.00 24L	bldg 6	DOOR FRAME	WHITE	WOOD	0.4	Negative
11175.00 25L	bldg 6	DOOR FRAME	WHITE	WOOD	0.17	Negative
11175.00 26L	bldg 6	DOOR	WHITE	WOOD	< LOD	Negative

Adelaide
Environmental Health Associates, Inc.
1511 Route 22, Suite C24, Brewster, NY 10509 Tel: 845.278.7710 Fax: 845.278.7750 www.adelaidellc.com

LEAD PAINT REPORT FORM

PROJECT NUMBER: 44080
PROJECT LOCATION: Provide Roofing and Siding
Training, Maintenance and Garage Buildings
MacCormick Secure Center
300 South Road
Brooktondale, NY 14817

DATE RECEIVED: 08/29/11
DATE COMPLETED: 09/01/11
DATE REPORTED: 09/22/11
TOTAL SAMPLE COUNT: 49
SAMPLE COLLECTOR(S): James Reber
XRF SERIAL NUMBER: 26378

SERVICES PROVIDED: Investigative Lead Paint Survey-XRF Survey

PESHOGS NO.	BLDG NUMBER	SAMPLE LOCATION, COORDINATES DESCRIPTION AND OTHER COMMENTS	COLOR	SUBSTRATE TYPE	XRF RESULT	Classification (Pos./Neg.)
11175.00 27L	bldg 6	WALL	RED	WOOD	0.04	Negative
11175.00 28L	bldg 6	WALL	RED	WOOD	0.07	Negative
11175.00 29L	bldg 6	WALL	RED	WOOD	0.03	Negative
11175.00 30L	bldg 6	WALL	RED	WOOD	0	Negative
11175.00 31L	bldg 6	WALL	RED	WOOD	0.02	Negative
11175.00 32L	bldg 6	WALL	RED	WOOD	0.02	Negative
11175.00 33L	bldg 6	WINDOW FRAME	WHITE	WOOD	0	Negative
11175.00 34L	bldg 6	WALL	WHITE	DRYWALL	0	Negative
11175.00 35L	bldg 6	DOOR FRAME	BLUE	WOOD	0	Negative
11175.00 36L	bldg 6	DOOR	WHITE	WOOD	0	Negative
11175.00 37L	bldg 7	WALL	GREEN	WOOD	0	Negative
11175.00 38L	bldg 7	WALL	GREEN	WOOD	0.06	Negative
11175.00 39L	bldg 7	WALL	GREEN	WOOD	0.06	Negative

Adelaide
Environmental Health Associates, Inc.
1511 Route 22, Suite C24, Brewster, NY 10509 Tel: 845.278.7710 Fax: 845.278.7750 www.adelaidellc.com

LEAD PAINT REPORT FORM

PROJECT NUMBER: 44080
PROJECT LOCATION: Provide Roofing and Siding
Training, Maintenance and Garage Buildings
MacCormick Secure Center
300 South Road
Brooktondale, NY 14817

DATE RECEIVED: 08/29/11
DATE COMPLETED: 09/01/11
DATE REPORTED: 09/22/11
TOTAL SAMPLE COUNT: 49
SAMPLE COLLECTOR(S): James Reber
XRF SERIAL NUMBER: 26378

SERVICES PROVIDED: Investigative Lead Paint Survey-XRF Survey

PESHOGS NO.	BLDG NUMBER	SAMPLE LOCATION, COORDINATES DESCRIPTION AND OTHER COMMENTS	COLOR	SUBSTRATE TYPE	XRF RESULT	Classification (Pos./Neg.)
11175.00 40L	bldg 7	WALL	GREEN	WOOD	0	Negative
11175.00 41L	bldg 7	WALL	GREEN	CONCRETE	0	Negative
11175.00 42L	bldg 7	WALL	GREEN	CONCRETE	0	Negative
11175.00 43L	bldg 7	WINDOW FRAME	GREEN	WOOD	0	Negative
11175.00 44L	bldg 7	WALL	GREEN	WOOD	0	Negative
11175.00 45L	bldg 7	DOOR FRAME	GREEN	WOOD	0	Negative
11175.00 46L	bldg 7	DOOR	GREEN	METAL	0	Negative
11175.00 47L	bldg 7	CALIBRATION			1.1	Accept
11175.00 48L	bldg 7	CALIBRATION			0.9	Accept
11175.00 49L	bldg 7	CALIBRATION			1.2	Accept

Adelaide Environmental Health Associates, Inc.
1511 Rt 22 Suite C24
Brewster, New York 10509

MacCormick Secure Center

Index	Reading No	Time	Type	Duration	Units	Sequence	COMPONENT	SUBSTRATE	SIDE	CONDITION	COLOR	SITE	INSPECTOR	FLOOR	ROOM	Res	EScale1	EscleCT	Results	Depth Index	Action Level	PbC
1	1	2011-09-01 07:04	SHUTTER_CAL	56.46	cps	Final										375.83	4.48	2.40				5.65 ± 0.00
2	2	2011-09-01 10:11	SHUTTER_CAL	56.48	cps	Final										370.33	4.48	2.39				5.68 ± 0.00
3	3	2011-09-01 10:28	PAINT	6.22	mg / cm ^2	Final	calibrate					MacCormick SC	JAMES REBER						Negative	1.00	1.00	0.90 ± 0.10
4	4	2011-09-01 10:29	PAINT	20.14	mg / cm ^2	Final	calibrate					MacCormick SC	JAMES REBER						Positive	1.08	1.00	1.00 ± 0.10
5	5	2011-09-01 10:29	PAINT	6.19	mg / cm ^2	Final	calibrate					MacCormick SC	JAMES REBER						Negative	1.00	1.00	0.90 ± 0.10
6	6	2011-09-01 10:31	PAINT	2.06	mg / cm ^2	Final	WALL	WOOD	A	POOR	RED	MacCormick SC	JAMES REBER		bldg 13				Negative	4.95	1.00	0.08 ± 0.18
7	7	2011-09-01 10:31	PAINT	1.02	mg / cm ^2	Final	WALL	WOOD	A	POOR	RED	MacCormick SC	JAMES REBER		bldg 13				Negative	1.54	1.00	0.05 ± 0.13
8	8	2011-09-01 10:32	PAINT	1.04	mg / cm ^2	Final	WALL	WOOD	A	POOR	RED	MacCormick SC	JAMES REBER		bldg 13				Negative	2.08	1.00	0.02 ± 0.09
9	9	2011-09-01 10:32	PAINT	1.04	mg / cm ^2	Final	WALL	WOOD	A	POOR	RED	MacCormick SC	JAMES REBER		bldg 13				Negative	1.00	1.00	0.00 ± 0.03
10	10	2011-09-01 10:32	PAINT	1.03	mg / cm ^2	Final	WALL	WOOD	B	POOR	RED	MacCormick SC	JAMES REBER		bldg 13				Negative	6.77	1.00	0.09 ± 0.41
11	11	2011-09-01 10:33	PAINT	1.02	mg / cm ^2	Final	WALL	WOOD	B	POOR	RED	MacCormick SC	JAMES REBER		bldg 13				Negative	7.64	1.00	0.13 ± 0.54
12	12	2011-09-01 10:33	PAINT	1.54	mg / cm ^2	Final	WALL	WOOD	B	POOR	RED	MacCormick SC	JAMES REBER		bldg 13				Negative	10.00	1.00	< LOD : 0.00
13	13	2011-09-01 10:33	PAINT	1.03	mg / cm ^2	Final	WALL	WOOD	B	POOR	RED	MacCormick SC	JAMES REBER		bldg 13				Negative	1.00	1.00	0.01 ± 0.06
14	14	2011-09-01 10:33	PAINT	1.02	mg / cm ^2	Final	WALL	WOOD	C	POOR	RED	MacCormick SC	JAMES REBER		bldg 13				Negative	2.24	1.00	0.02 ± 0.09
15	15	2011-09-01 10:34	PAINT	1.03	mg / cm ^2	Final	WINDOW FRAME	WOOD	C	POOR	RED	MacCormick SC	JAMES REBER		bldg 13				Negative	2.67	1.00	0.05 ± 0.18
16	16	2011-09-01 10:35	PAINT	4.62	mg / cm ^2	Final	DOOR	WOOD	A	POOR	WHITE	MacCormick SC	JAMES REBER		bldg 13				Negative	7.46	1.00	0.70 ± 0.30
17	17	2011-09-01 10:35	PAINT	2.05	mg / cm ^2	Final	DOOR	WOOD	A	POOR	WHITE	MacCormick SC	JAMES REBER		bldg 13				Negative	4.70	1.00	0.25 ± 0.29
18	18	2011-09-01 10:35	PAINT	2.07	mg / cm ^2	Final	DOOR	WOOD	A	POOR	WHITE	MacCormick SC	JAMES REBER		bldg 13				Negative	4.89	1.00	0.08 ± 0.18
19	19	2011-09-01 10:35	PAINT	0.52	mg / cm ^2	Final	DOOR	WOOD	A	POOR	WHITE	MacCormick SC	JAMES REBER		bldg 13				Null	6.17	1.00	1.00 ± 1.90
20	20	2011-09-01 10:36	PAINT	3.65	mg / cm ^2	Final	DOOR	WOOD	A	POOR	WHITE	MacCormick SC	JAMES REBER		bldg 13				Negative	3.81	1.00	0.70 ± 0.20
21	21	2011-09-01 10:37	PAINT	1.02	mg / cm ^2	Final	WALL	WOOD	B	POOR	RED	MacCormick SC	JAMES REBER		bldg 6				Negative	7.18	1.00	0.19 ± 0.67
22	22	2011-09-01 10:37	PAINT	1.03	mg / cm ^2	Final	WALL	WOOD	B	POOR	RED	MacCormick SC	JAMES REBER		bldg 6				Negative	7.72	1.00	0.15 ± 0.60
23	23	2011-09-01 10:38	PAINT	1.03	mg / cm ^2	Final	DOOR	WOOD	B	POOR	WHITE	MacCormick SC	JAMES REBER		bldg 6				Negative	4.22	1.00	0.30 ± 0.60
24	24	2011-09-01 10:38	PAINT	1.54	mg / cm ^2	Final	DOOR FRAME	WOOD	B	POOR	WHITE	MacCormick SC	JAMES REBER		bldg 6				Negative	6.98	1.00	0.40 ± 0.60
25	25	2011-09-01 10:38	PAINT	3.10	mg / cm ^2	Final	DOOR FRAME	WOOD	A	POOR	WHITE	MacCormick SC	JAMES REBER		bldg 6				Negative	7.12	1.00	0.17 ± 0.26
26	26	2011-09-01 10:39	PAINT	1.55	mg / cm ^2	Final	DOOR	WOOD	A	POOR	WHITE	MacCormick SC	JAMES REBER		bldg 6				Negative	10.00	1.00	< LOD : 0.00
27	27	2011-09-01 10:39	PAINT	1.02	mg / cm ^2	Final	WALL	WOOD	A	POOR	RED	MacCormick SC	JAMES REBER		bldg 6				Negative	2.06	1.00	0.04 ± 0.15
28	28	2011-09-01 10:39	PAINT	1.03	mg / cm ^2	Final	WALL	WOOD	A	POOR	RED	MacCormick SC	JAMES REBER		bldg 6				Negative	3.18	1.00	0.07 ± 0.24
29	29	2011-09-01 10:40	PAINT	1.03	mg / cm ^2	Final	WALL	WOOD	A	POOR	RED	MacCormick SC	JAMES REBER		bldg 6				Negative	2.11	1.00	0.03 ± 0.13
30	30	2011-09-01 10:40	PAINT	1.04	mg / cm ^2	Final	WALL	WOOD	D	POOR	RED	MacCormick SC	JAMES REBER		bldg 6				Negative	1.00	1.00	0.00 ± 0.02
31	31	2011-09-01 10:40	PAINT	1.03	mg / cm ^2	Final	WALL	WOOD	D	POOR	RED	MacCormick SC	JAMES REBER		bldg 6				Negative	1.67	1.00	0.02 ± 0.09
32	32	2011-09-01 10:40	PAINT	1.03	mg / cm ^2	Final	WALL	WOOD	D	POOR	RED	MacCormick SC	JAMES REBER		bldg 6				Negative	2.02	1.00	0.02 ± 0.10
33	33	2011-09-01 10:41	PAINT	1.03	mg / cm ^2	Final	WINDOW FRAME	WOOD	A	POOR	WHITE	MacCormick SC	JAMES REBER		bldg 6				Negative	1.00	1.00	0.00 ± 0.02
34	34	2011-09-01 10:42	PAINT	2.06	mg / cm ^2	Final	WALL	DRYWALL	A	INTACT	WHITE	MacCormick SC	JAMES REBER		bldg 6				Negative	1.00	1.00	0.00 ± 0.02
35	35	2011-09-01 10:42	PAINT	1.04	mg / cm ^2	Final	DOOR FRAME	WOOD	A	INTACT	BLUE	MacCormick SC	JAMES REBER		bldg 6				Negative	1.00	1.00	0.00 ± 0.03
36	36	2011-09-01 10:43	PAINT	1.04	mg / cm ^2	Final	DOOR	WOOD	A	INTACT	WHITE	MacCormick SC	JAMES REBER		bldg 6				Negative	1.00	1.00	0.00 ± 0.03
37	37	2011-09-01 10:56	PAINT	1.04	mg / cm ^2	Final	WALL	WOOD	A	INTACT	GREEN	MacCormick SC	JAMES REBER		bldg 7				Negative	1.00	1.00	0.00 ± 0.03
38	38	2011-09-01 10:56	PAINT	1.05	mg / cm ^2	Final	WALL	WOOD	A	INTACT	GREEN	MacCormick SC	JAMES REBER		bldg 7				Negative	1.37	1.00	0.06 ± 0.13
39	39	2011-09-01 10:56	PAINT	1.03	mg / cm ^2	Final	WALL	WOOD	A	INTACT	GREEN	MacCormick SC	JAMES REBER		bldg 7				Negative	1.74	1.00	0.06 ± 0.16
40	40	2011-09-01 10:57	PAINT	1.03	mg / cm ^2	Final	WALL	WOOD	A	INTACT	GREEN	MacCormick SC	JAMES REBER		bldg 7				Negative	1.00	1.00	0.00 ± 0.03
41	41	2011-09-01 10:57	PAINT	2.59	mg / cm ^2	Final	WALL	CONCRETE	A	POOR	GREEN	MacCormick SC	JAMES REBER		bldg 7				Negative	1.00	1.00	0.00 ± 0.02
42	42	2011-09-01 10:58	PAINT	2.59	mg / cm ^2	Final	WALL	CONCRETE	A	POOR	GREEN	MacCormick SC	JAMES REBER		bldg 7				Negative	1.00	1.00	0.00 ± 0.02
43	43	2011-09-01 10:58	PAINT	1.02	mg / cm ^2	Final	WINDOW FRAME	WOOD	A	POOR	GREEN	MacCormick SC	JAMES REBER		bldg 7				Negative	1.00	1.00	0.00 ± 0.03
44	44	2011-09-01 10:59	PAINT	1.03	mg / cm ^2	Final	WALL	WOOD	C	POOR	GREEN	MacCormick SC	JAMES REBER		bldg 7				Negative	1.00	1.00	0.00 ± 0.03
45	45	2011-09-01 11:01	PAINT	2.08	mg / cm ^2	Final	DOOR FRAME	WOOD	D	POOR	GREEN	MacCormick SC	JAMES REBER		bldg 7				Negative	1.00	1.00	0.00 ± 0.02
46	46	2011-09-01 11:01	PAINT	1.04	mg / cm ^2	Final	DOOR	METAL	D	CHALKING	GREEN	MacCormick SC	JAMES REBER		bldg 7				Negative	1.00	1.00	0.00 ± 0.02
47	47	2011-09-01 11:04	PAINT	10.89	mg / cm ^2	Final			CALIBRATE			MacCormick SC	JAMES REBER		bldg 7				Positive	1.10	1.00	1.10 ± 0.10
48	48	2011-09-01 11:05	PAINT	7.20	mg / cm ^2	Final			CALIBRATE			MacCormick SC	JAMES REBER		bldg 7				Negative	1.01	1.00	0.90 ± 0.10
49	49	2011-09-01 11:05	PAINT	6.21	mg / cm ^2	Final			CALIBRATE			MacCormick SC	JAMES REBER		bldg 7				Positive	1.16	1.00	1.20 ± 0.10

APPENDIX C

PCB DATA SHEETS

Adelaide
Environmental Health Associates, Inc.
1511 Route 22, Suite C24, Brewster, NY 10509 Tel: 845.278.7710 Fax: 845.278.7750
www.adelaidellc.com

POLYCHLORINATED BIPHENYL (PCB) REPORT FORM

PROJECT NUMBER: 44080
PROJECT LOCATION: Provide Roofing and Siding
Training, Maintenance and Garage Buildings
MacCormick Secure Center
300 South Road
Brooktendale, NY 14817

DATE RECEIVED: 8/29/2011
DATE COMPLETED: 9/1/2011
DATE REPORTED: 9/22/2011
NUMBER OF SAMPLES: 4
SAMPLE COLLECTOR: James Reber

SERVICES PROVIDED PCB Bulk Sampling

PESHOGS NO.	LAB ID NO.	SAMPLE LOCATION, COORDINATES DESCRIPTION AND OTHER COMMENTS	MATERIAL TYPE	PCB LEVEL (mg/kg dry)	Actionable (yes/no)
11175.00 01	11I0391-01	Garage Building Window Glazing	Glazing	ND	No
11175.00 02	11I0391-02	Garage Building Caulk @ Concrete Base	Caulk	ND	No
11175.00 03	11I0391-03	Maintenance Building Window Glazing	Glazing	ND	No
11175.00 04	**11I0391-04**	**Maintenance Building Door Caulk**	**Caulk**	**179**	**Yes**

ND = Not Detected

YORK

ANALYTICAL LABORATORIES, INC.

Technical Report

prepared for:

Adelaide Environmental Health Associates, Inc.
1511 Route 22, Suite C24
Brewster NY, 10509
Attention: Mr. John Soter

Report Date: 09/19/2011
Client Project ID: MacCormick SC
York Project (SDG) No.: 11I0391

CT License No. PH-0725 New Jersey License No. CT-005 New York License No. 10854 PA License No. 68-04440

120 RESEARCH DRIVE STRATFORD, CT 06615 (203) 325-1371 FAX (203) 357-0166

Report Date: 09/19/2011
Client Project ID: MacCormick SC
York Project (SDG) No.: 11I0391

Adelaide Environmental Health Associates, Inc.
1511 Route 22, Suite C24
Brewster NY, 10509
Attention: Mr. John Soter

Purpose and Results

This report contains the analytical data for the sample(s) identified on the attached chain-of-custody received in our laboratory on September 13, 2011 and listed below. The project was identified as your project: **MacCormick SC.**

The analyses were conducted utilizing appropriate EPA, Standard Methods, and ASTM methods as detailed in the data summary tables.

All samples were received in proper condition meeting the customary acceptance requirements for environmental samples except those indicated under the Notes section of this report.

All analyses met the method and laboratory standard operating procedure requirements except as indicated by any data flags, the meaning of which are explained in the attachment to this report, and case narrative if applicable.

The results of the analyses, which are all reported on dry weight basis (soils) unless otherwise noted, are detailed in the following pages.

Please contact Client Services at 203.325.1371 with any questions regarding this report.

York Sample ID	Client Sample ID	Matrix	Date Collected	Date Received
11I0391-01	1A-GARAGE WINDOW GLAZING	Caulk	09/01/2011	09/13/2011
11I0391-02	2A-GARAGE-CAULK @ CONCRETE	Caulk	09/01/2011	09/13/2011
11I0391-03	3A-MAINTENANCE WINDOW GLAZING	Caulk	09/01/2011	09/13/2011
11I0391-04	4A-MAINTENANCE DOOR CAULK	Caulk	09/01/2011	09/13/2011

General Notes for York Project (SDG) No.: 11I0391

1. The RLs and MDLs (Reporting Limit and Method Detection Limit respectively) reported are adjusted for any dilution necessary due to the levels of target and/or non-target analytes and matrix interference. The RL(REPORTING LIMIT) is based upon the lowest standard utilized for the calibration where applicable.
2. Samples are retained for a period of thirty days after submittal of report, unless other arrangements are made.
3. York's liability for the above data is limited to the dollar value paid to York for the referenced project.
4. This report shall not be reproduced without the written approval of York Analytical Laboratories, Inc.
5. All samples were received in proper condition for analysis with proper documentation, unless otherwise noted.
6. All analyses conducted met method or Laboratory SOP requirements. See the Qualifiers and/or Narrative sections for further information.
7. It is noted that no analyses reported herein were subcontracted to another laboratory, unless noted in the report.
8. This report reflects results that relate only to the samples submitted on the attached chain-of-custody form(s) received by York.

Approved By: **Date:** 09/19/2011

Robert Q. Bradley
Executive Vice President / Laboratory Director

YORK

YORK

ANALYTICAL LABORATORIES, INC.

Sample Information

Client Sample ID: 1A-GARAGE WINDOW GLAZING **York Sample ID:** 11I0391-01

York Project (SDG) No.	Client Project ID	Matrix	Collection Date/Time	Date Received
11I0391	MacCormick SC	Caulk	September 1, 2011 3:00 pm	09/13/2011

Polychlorinated Biphenyls (PCB) **Log-in Notes:** **Sample Notes:**

Sample Prepared by Method: EPA 3550B

CAS No.	Parameter	Result	Flag	Units	MDL	RL	Dilution	Reference Method	Date/Time Prepared	Date/Time Analyzed	Analyst
12674-11-2	Aroclor 1016	ND		mg/kg dry	0.237	0.510	1	EPA SW 846-8082	09/15/2011 08:24	09/19/2011 11:15	JW
11104-28-2	Aroclor 1221	ND		mg/kg dry	0.237	0.510	1	EPA SW 846-8082	09/15/2011 08:24	09/19/2011 11:15	JW
11141-16-5	Aroclor 1232	ND		mg/kg dry	0.237	0.510	1	EPA SW 846-8082	09/15/2011 08:24	09/19/2011 11:15	JW
53469-21-9	Aroclor 1242	ND		mg/kg dry	0.237	0.510	1	EPA SW 846-8082	09/15/2011 08:24	09/19/2011 11:15	JW
12672-29-6	Aroclor 1248	ND		mg/kg dry	0.237	0.510	1	EPA SW 846-8082	09/15/2011 08:24	09/19/2011 11:15	JW
11097-69-1	Aroclor 1254	ND		mg/kg dry	0.204	0.510	1	EPA SW 846-8082	09/15/2011 08:24	09/19/2011 11:15	JW
11096-82-5	Aroclor 1260	ND		mg/kg dry	0.204	0.510	1	EPA SW 846-8082	09/15/2011 08:24	09/19/2011 11:15	JW
37324-23-5	Aroclor 1262	ND		mg/kg dry	0.204	0.510	1	EPA SW 846-8082	09/15/2011 08:24	09/19/2011 11:15	JW
11100-14-4	Aroclor 1268	ND		mg/kg dry	0.204	0.510	1	EPA SW 846-8082	09/15/2011 08:24	09/19/2011 11:15	JW
1336-36-3	Total PCBs	ND		mg/kg dry	0.204	0.510	1	EPA SW 846-8082	09/15/2011 08:24	09/19/2011 11:15	JW

Total Solids **Log-in Notes:** **Sample Notes:**

Sample Prepared by Method: % Solids Prep

CAS No.	Parameter	Result	Flag	Units	MDL	RL	Dilution	Reference Method	Date/Time Prepared	Date/Time Analyzed	Analyst
solids	% Solids	100		%	0.100	0.100	1	SM 2540G	09/15/2011 14:39	09/15/2011 14:39	MZ

Sample Information

Client Sample ID: 2A-GARAGE-CAULK @ CONCRETE **York Sample ID:** 11I0391-02

York Project (SDG) No.	Client Project ID	Matrix	Collection Date/Time	Date Received
11I0391	MacCormick SC	Caulk	September 1, 2011 3:00 pm	09/13/2011

Polychlorinated Biphenyls (PCB) **Log-in Notes:** **Sample Notes:**

Sample Prepared by Method: EPA 3550B

CAS No.	Parameter	Result	Flag	Units	MDL	RL	Dilution	Reference Method	Date/Time Prepared	Date/Time Analyzed	Analyst
12674-11-2	Aroclor 1016	ND		mg/kg dry	0.237	0.510	1	EPA SW 846-8082	09/15/2011 08:24	09/19/2011 11:54	JW
11104-28-2	Aroclor 1221	ND		mg/kg dry	0.237	0.510	1	EPA SW 846-8082	09/15/2011 08:24	09/19/2011 11:54	JW
11141-16-5	Aroclor 1232	ND		mg/kg dry	0.237	0.510	1	EPA SW 846-8082	09/15/2011 08:24	09/19/2011 11:54	JW
53469-21-9	Aroclor 1242	ND		mg/kg dry	0.237	0.510	1	EPA SW 846-8082	09/15/2011 08:24	09/19/2011 11:54	JW
12672-29-6	Aroclor 1248	ND		mg/kg dry	0.237	0.510	1	EPA SW 846-8082	09/15/2011 08:24	09/19/2011 11:54	JW
11097-69-1	Aroclor 1254	ND		mg/kg dry	0.204	0.510	1	EPA SW 846-8082	09/15/2011 08:24	09/19/2011 11:54	JW
11096-82-5	Aroclor 1260	ND		mg/kg dry	0.204	0.510	1	EPA SW 846-8082	09/15/2011 08:24	09/19/2011 11:54	JW
37324-23-5	Aroclor 1262	ND		mg/kg dry	0.204	0.510	1	EPA SW 846-8082	09/15/2011 08:24	09/19/2011 11:54	JW
11100-14-4	Aroclor 1268	ND		mg/kg dry	0.204	0.510	1	EPA SW 846-8082	09/15/2011 08:24	09/19/2011 11:54	JW
1336-36-3	Total PCBs	ND		mg/kg dry	0.204	0.510	1	EPA SW 846-8082	09/15/2011 08:24	09/19/2011 11:54	JW

120 RESEARCH DRIVE STRATFORD, CT 06615 (203) 325-1371 FAX (203) 357-0166

YORK

ANALYTICAL LABORATORIES, INC.

Sample Information

Client Sample ID: 2A-GARAGE-CAULK @ CONCRETE **York Sample ID:** 11I0391-02

York Project (SDG) No.	Client Project ID	Matrix	Collection Date/Time	Date Received
11I0391	MacCormick SC	Caulk	September 1, 2011 3:00 pm	09/13/2011

Total Solids **Log-in Notes:** **Sample Notes:**

Sample Prepared by Method: % Solids Prep

CAS No.	Parameter	Result	Flag	Units	MDL	RL	Dilution	Reference Method	Date/Time Prepared	Date/Time Analyzed	Analyst
solids	% Solids	100		%	0.100	0.100	1	SM 2540G	09/15/2011 14:39	09/15/2011 14:39	MZ

Sample Information

Client Sample ID: 3A-MAINTENANCE WINDOW GLAZING **York Sample ID:** 11I0391-03

York Project (SDG) No.	Client Project ID	Matrix	Collection Date/Time	Date Received
11I0391	MacCormick SC	Caulk	September 1, 2011 3:00 pm	09/13/2011

Polychlorinated Biphenyls (PCB) **Log-in Notes:** **Sample Notes:**

Sample Prepared by Method: EPA 3550B

CAS No.	Parameter	Result	Flag	Units	MDL	RL	Dilution	Reference Method	Date/Time Prepared	Date/Time Analyzed	Analyst
12674-11-2	Aroclor 1016	ND		mg/kg dry	0.237	0.510	1	EPA SW 846-8082	09/15/2011 08:24	09/19/2011 12:23	JW
11104-28-2	Aroclor 1221	ND		mg/kg dry	0.237	0.510	1	EPA SW 846-8082	09/15/2011 08:24	09/19/2011 12:23	JW
11141-16-5	Aroclor 1232	ND		mg/kg dry	0.237	0.510	1	EPA SW 846-8082	09/15/2011 08:24	09/19/2011 12:23	JW
53469-21-9	Aroclor 1242	ND		mg/kg dry	0.237	0.510	1	EPA SW 846-8082	09/15/2011 08:24	09/19/2011 12:23	JW
12672-29-6	Aroclor 1248	ND		mg/kg dry	0.237	0.510	1	EPA SW 846-8082	09/15/2011 08:24	09/19/2011 12:23	JW
11097-69-1	Aroclor 1254	ND		mg/kg dry	0.204	0.510	1	EPA SW 846-8082	09/15/2011 08:24	09/19/2011 12:23	JW
11096-82-5	Aroclor 1260	ND		mg/kg dry	0.204	0.510	1	EPA SW 846-8082	09/15/2011 08:24	09/19/2011 12:23	JW
37324-23-5	Aroclor 1262	ND		mg/kg dry	0.204	0.510	1	EPA SW 846-8082	09/15/2011 08:24	09/19/2011 12:23	JW
11100-14-4	Aroclor 1268	ND		mg/kg dry	0.204	0.510	1	EPA SW 846-8082	09/15/2011 08:24	09/19/2011 12:23	JW
1336-36-3	Total PCBs	ND		mg/kg dry	0.204	0.510	1	EPA SW 846-8082	09/15/2011 08:24	09/19/2011 12:23	JW

Total Solids **Log-in Notes:** **Sample Notes:**

Sample Prepared by Method: % Solids Prep

CAS No.	Parameter	Result	Flag	Units	MDL	RL	Dilution	Reference Method	Date/Time Prepared	Date/Time Analyzed	Analyst
solids	% Solids	100		%	0.100	0.100	1	SM 2540G	09/15/2011 14:39	09/15/2011 14:39	MZ

Sample Information

Client Sample ID: 4A-MAINTENANCE DOOR CAULK **York Sample ID:** 11I0391-04

York Project (SDG) No.	Client Project ID	Matrix	Collection Date/Time	Date Received
11I0391	MacCormick SC	Caulk	September 1, 2011 3:00 pm	09/13/2011

Polychlorinated Biphenyls (PCB) **Log-in Notes:** **Sample Notes:**

Sample Prepared by Method: EPA 3550B

CAS No.	Parameter	Result	Flag	Units	MDL	RL	Dilution	Reference Method	Date/Time Prepared	Date/Time Analyzed	Analyst
12674-11-2	Aroclor 1016	ND		mg/kg dry	2.37	5.10	10	EPA SW 846-8082	09/15/2011 08:24	09/19/2011 13:38	JW
11104-28-2	Aroclor 1221	ND		mg/kg dry	2.37	5.10	10	EPA SW 846-8082	09/15/2011 08:24	09/19/2011 13:38	JW

YORK

ANALYTICAL LABORATORIES, INC.

Sample Information

Client Sample ID: 4A-MAINTENANCE DOOR CAULK

York Sample ID: 11I0391-04

York Project (SDG) No.	Client Project ID	Matrix	Collection Date/Time	Date Received
11I0391	MacCormick SC	Caulk	September 1, 2011 3:00 pm	09/13/2011

Polychlorinated Biphenyls (PCB)

Log-in Notes:

Sample Notes:

Sample Prepared by Method: EPA 3550B

CAS No.	Parameter	Result	Flag	Units	MDL	RL	Dilution	Reference Method	Date/Time Prepared	Date/Time Analyzed	Analyst
11141-16-5	Aroclor 1232	ND		mg/kg dry	2.37	5.10	10	EPA SW 846-8082	09/15/2011 08:24	09/19/2011 13:38	JW
53469-21-9	Aroclor 1242	ND		mg/kg dry	2.37	5.10	10	EPA SW 846-8082	09/15/2011 08:24	09/19/2011 13:38	JW
12672-29-6	Aroclor 1248	ND		mg/kg dry	2.37	5.10	10	EPA SW 846-8082	09/15/2011 08:24	09/19/2011 13:38	JW
11097-69-1	**Aroclor 1254**	**179**		mg/kg dry	2.04	5.10	10	EPA SW 846-8082	09/15/2011 08:24	09/19/2011 13:38	JW
11096-82-5	Aroclor 1260	ND		mg/kg dry	2.04	5.10	10	EPA SW 846-8082	09/15/2011 08:24	09/19/2011 13:38	JW
37324-23-5	Aroclor 1262	ND		mg/kg dry	2.04	5.10	10	EPA SW 846-8082	09/15/2011 08:24	09/19/2011 13:38	JW
11100-14-4	Aroclor 1268	ND		mg/kg dry	2.04	5.10	10	EPA SW 846-8082	09/15/2011 08:24	09/19/2011 13:38	JW
1336-36-3	**Total PCBs**	**179**		mg/kg dry	2.04	5.10	10	EPA SW 846-8082	09/15/2011 08:24	09/19/2011 13:38	JW

Total Solids

Log-in Notes:

Sample Notes:

Sample Prepared by Method: % Solids Prep

CAS No.	Parameter	Result	Flag	Units	MDL	RL	Dilution	Reference Method	Date/Time Prepared	Date/Time Analyzed	Analyst
solids	% Solids	100		%	0.100	0.100	1	SM 2540G	09/15/2011 14:39	09/15/2011 14:39	MZ

120 RESEARCH DRIVE STRATFORD, CT 06615 (203) 325-1371 FAX (203) 357-0166

YORK

ANALYTICAL LABORATORIES, INC.

Notes and Definitions

ND	Analyte NOT DETECTED at the stated Reporting Limit (RL) or above.
RL	REPORTING LIMIT - the minimum reportable value based upon the lowest point in the analyte calibration curve.
MDL	METHOD DETECTION LIMIT - the minimum concentration that can be measured and reported with a 99% confidence that the concentration is greater than zero. If requested or required, a value reported below the RL and above the MDL is considered estimated and is noted with a "J" flag.
NR	Not reported
RPD	Relative Percent Difference
Wet	The data has been reported o... as-received (wet weight) basis
Low Bias	Low Bias flag indicates that the recovery of the flagged analyte is below the laboratory or regulatory lower control limit. The data user should take note that this analyte may be biased low but should evaluate multiple lines of evidence including the LCS and site-specific MS/MSD data to draw bias conclusions. In cases where no site-specific MS/MSD was requested, only the LCS data can be used to evaluate such bias.
High Bias	High Bias flag indicates that the recovery of the flagged analyte is above the laboratory or regulatory upper control limit. The data user should take note that this analyte may be biased high but should evaluate multiple lines of evidence including the LCS and site-specific MS/MSD data to draw bias conclusions. In cases where no site-specific MS/MSD was requested, only the LCS data can be used to evaluate such bias.
Non-Dir.	Non-dir. flag (Non-Directional Bias) indicates that the Relative Percent Difference (RPD) (a measure of precision) among the MS and MSD data is outside the laboratory or regulatory control limit. This alerts the data user where the MS and MSD are from site-specific samples that the RPD is high due to either non-homogeneous distribution of target analyte between the MS/MSD or indicates poor reproducibility for other reasons.

Corrective Action:

...n an

120 RESEARCH DRIVE STRATFORD, CT 06615 (203) 325-1371 FAX (203) 357-0166

Print Form

YORK
ANALYTICAL LABORATORIES, INC.

120 RESEARCH DR. STRATFORD, CT 06615
(203) 325-1371 FAX (203) 357-0166

Field Chain-of-Custody Record

Page____ of____

NOTE: York's Std. Terms & Conditions are listed on the back side of this document.
This document serves as your written authorization to York to proceed with the analyses requested and your signature binds you to York's Std. Terms & Conditions unless superseded by written contract.

York Project No. 11I0391

YOUR Information	Report To:	Invoice To:	YOUR Project ID	Turn-Around Time	Report Type/Deliverbles
Company: Adirondack Environmental	Company: SAMC	Company: SAMC	MacCormick SC	RUSH - Same Day ☐	Summary Report ____
Address: 1511 RT 22 Brewster, NY	Address:	Address:	Purchase Order No. NYA	RUSH - Next Day ☐	Summary w/ QA Summary ____
Phone No. 845-278-7710	Phone No.	Phone No.		RUSH - Two Day ☐	CT RCP Package ____
Contact Person: John Soter	Attention:	Attention:		RUSH - Three Day ☐	NY ASP A Package ____
E-Mail Address: jsoter@adelaidelle.com	E-Mail Address:	E-Mail Address:	Samples from: CT___ NY___ NJ___	RUSH - Four Day ☐	ASP B Package ____
				Standard(5-7 Days) ☑	Electronic Deliverables: EDD (Specify Type) ____ Excel ____

Print Clearly and Legibly. All Information must be complete. Samples will NOT be logged in and the turn-around time clock will not begin until any questions by York are resolved.

Samples Collected/Authorized By (Signature)

JAMES RIEBER
Name (printed)

Matrix Codes
S - soil
Other - specify(oil, etc.)
WW - wastewater
GW - groundwater
DW - drinking water
Air-A - ambient air
Air-SV - soil vapor

Volatiles		Semi-Vols.	Pest/PCB/Herb	Metals	Misc. Org.	Full Lists	Common Miscellaneous Parameters		
8260 full	TICs	8270 or 625	8082PCB	RCRA8	TPH GRO	Pri.Poll.	Corrosivity	Nitrate	Color
624	Site Spec.	STARS list	8081Pest	PP13 list	TPH DRO	TCL Organics	Reactivity	Nitrite	Phenols
STARS list	Nassau Co.	BN Only	8151Herb	TAL	CT ETPH	TAL MetCN	Ignitability	TKN	Cyanide-T
BTEX	Suffolk Co.	Acids Only	CT RCP	CT15 list	NY 310-13	Full TCLP	Flash Point	Tot Nitrogen	Cyanide-A
MTBE	Ketones	PAH list	App. IX	TAGM list	TPH 1664	Full App. IX	Sieve Anal.	Ammonia-N	BOD5
TCL list	Oxygenates	TAGM list	Site Spec.	NJDEP list	Air TO14A	Part360-Routine	Heterotrophs	Chloride	CBOD5
TAGM list	TCLP list	CT RCP list	SPLP or TCLP	Total	Air TO15	Part360-Baseline	TOX	Phosphate	BOD28
CT RCP list	524.2	TCL list	TCLP Pest	Dissolved	Air STARS	Part 360-Expanded Not Detected Below	BTU/lb.	Tot. Phos.	COD
Arom. only	502.2	NJDEP list	TCLP Herb	SPLP or TCLP	Air VPH	Part 360-Expanded Full List	Aquatic Tox.	Oil&Grease	TSS
Halog. only	NJDEP list	App. IX	Chlordane	Indic.Metals	Air TICs	NYCDEP Sewer	TOC	F.O.G.	Total Solids
App.IX list	SPLP or TCLP	TCLP BNA	608 Pest	LIST Below	Methane	NYSDEC Sewer	Asbestos	pH	TDS
8021B list		SPLP or TCLP	608 PCB		Helium	TAGM	Silica	MBAS	TPH-1664

Special Instructions
Field Filtered ☐
Lab to Filter ☐

Sample Identification	Date Sampled	Sample Matrix	Choose Analyses Needed from the Menu Above and Enter Below	Container Description(s)
1A - Garage Window Glazing	9/1/11	Caulk	8082 PCB	Bag
2A - Garage - Caulk @ Concrete	↓	↓	↓	↓
3A - Maintenance Window Glazing	↓	↓	↓	↓
4A - Maintenance Door Caulk	↓	↓	↓	↓

Comments

Preservation Check those Applicable: 4°C____ Frozen____ HCl____ MeOH____ HNO_3____ H_2SO_4____ NaOH____ ZnAc____ Ascorbic Acid____ Other____

Samples Relinquished By ____ Date/Time 9/
Samples Relinquished By ____ Date/Time

Samples Received By ____ Date/Time
Samples Received in LAB by ____ Date/Time 9/13/11 1205

Temperature on Receipt ___ °C

OGS Project No. 44080

APPENDIX D

PERSONNEL AND LABORATORY CERTIFICATIONS

NEW YORK STATE - DEPARTMENT OF LABOR
DIVISION OF SAFETY AND HEALTH
LICENSE AND CERTIFICATE UNIT
STATE CAMPUS BUILDING 12
ALBANY, NY 12240

ASBESTOS HANDLING LICENSE

Adelaide Environmental Health Associates, Inc.
Suite C24
1511 Route 22

Brewster, NY 10509

FILE NUMBER: 99-0656
LICENSE NUMBER: 29305
LICENSE CLASS: RESTRICTED
DATE OF ISSUE: 06/15/2011
EXPIRATION DATE: 07/31/2012

Duly Authorized Representative – John Soter

This license has been issued in accordance with applicable provisions of Article 30 of the Labor Law of New York State and of the New York State Codes, Rules and Regulations (12 NYCRR Part 56). It is subject to suspension or revocation for a (1) serious violation of state, federal or local laws with regard to the conduct of an asbestos project, or (2) demonstrated lack of responsibility in the conduct of any job involving asbestos or asbestos material.

This license is valid only for the contractor named above and this license or a photocopy must be prominently displayed at the asbestos project worksite. This license verifies that all persons employed by the licensee on an asbestos project in New York State have been issued an Asbestos Certificate, appropriate for the type of work they perform, by the New York State Department of Labor.

Maureen A. Cox

Maureen A. Cox, Director
FOR THE COMMISSIONER OF LABOR

SH 432 (4-07)

NEW YORK STATE DEPARTMENT OF HEALTH
WADSWORTH CENTER

Expires 12:01 AM April 01, 2012
Issued April 01, 2011

CERTIFICATE OF APPROVAL FOR LABORATORY SERVICE

Issued in accordance with and pursuant to section 502 Public Health Law of New York State

MR. PAUL MUCHA
AMERICA SCIENCE TEAM NEW YORK INC
117 EAST 30TH ST
NEW YORK, NY 10016

NY Lab Id No: 11480
EPA Lab Code: NY01378

is hereby APPROVED as an Environmental Laboratory for the category
ENVIRONMENTAL ANALYSES SOLID AND HAZARDOUS WASTE
All approved subcategories and/or analytes are listed below:

Miscellaneous

Asbestos in Friable Material	EPA 600/M4/82/020
	Item 198.1 of Manual
Asbestos in Non-Friable Material-PLM	Item 198.6 of Manual (NOB by PLM)
Asbestos in Non-Friable Material-TEM	ITEM 198.4 OF MANUAL

Serial No.: 44322

Property of the New York State Department of Health. Certificates are valid only at the address shown, must be conspicuously posted, and are printed on secure paper. Continued accreditation depends on successful ongoing participation in the Program. Consumers are urged to call (518) 485-5570 to verify the laboratory's accreditation status.

STATE OF NEW YORK - DEPARTMENT OF LABOR

ASBESTOS CERTIFICATE

JAMES J REBER

CLASS(EXPIRES)

C A/TEC(02/12) D INSP(02/12)

H PM (02/12) I PD* (02/12)

CERT# 06-08268

DMV# 751422435

MUST BE CARRIED ON ASBESTOS PROJECTS

EYES BRO

HAIR BRO

HGT 5' 11"

IF FOUND RETURN TO:

NYSDOL - L&C UNIT

ROOM 161A BUILDING 12

STATE OFFICE CAMPUS

ALBANY NY 12240

United States Environmental Protection Agency

This is to certify that

Adelaide Environmental Health Associates, Inc

has fulfilled the requirements of the Toxic Substances Control Act (TSCA) Section 402, and has received certification to conduct lead-based paint activities pursuant to 40 CFR Part 745.226

In the Jurisdiction of:

New York

This certification is valid from the date of issuance and expires March 6, 2013

NY-15081-2

Certification #

APR - 8 2010

Issued On

John Gorman, Acting Chief

Pesticides & Toxic Substances Branch

OGS Project No. 44080

ThermoFisher SCIENTIFIC

Instrument Calibration

Definitions of Calibration

Calibration can mean several different things, and it is necessary to distinguish between them:

Factory Calibration

A procedure undertaken before your analyzer was shipped, or when your analyzer is serviced. A set of known standards is tested, and element concentration calibration factors are determined and uploaded into the analyzer.

Detector or Energy Scale Calibration

Upon user initiation, the analyzer will take a reading of the inside of the shutter. The energy spectra are calibrated by filtering the known peaks that are measured to their known energies. The energy scale is adjusted so that it reads correctly.

Verification of Instrument Calibration

This is actually not a calibration – it is "response verification." It is a check of whether the instrument is currently performing to specification. Readings are checked against a supplied check standard response value range.

1. In K & L mode, take a 20 nominal second sample on the front side of the paint card. (Keep in mind the instrument can read through the card to the substrate so do not place it on a surface where you suspect any lead might be present.)

   The Pb value should be within the range on the standard card.

   The PbL is the L Shell reading.

   PbK is the K shell reading.

   Pb is the algorithmically determined reported Pb Content equal to either the PbL or the PbK.

   The XRF Calibration Check Limits for the nominal 1.0 mg/cm2 standards are written on the paint standard card, "For a 20 second reading the range is...to...").

   PbL should be within this limit.

   PbK should be within this limit when its statistics error is factored in.

2. If either of the PbL or PbK do not read as specified above, repeat the test.

3. If after 2 attempts, the PbL or PbK do not read as specified above, please call Thermo Fisher Scientific customer support toll free at 800-875-1578 or 978-670-7460.

4. Repeat steps 1-3 with a test on the back of the nominal 1.0 standard which is located on the back of the card.

5. In addition, for housing inspections, the Performance Characteristic Sheet (PCS) and/or specific state requirements may be required to be followed.

ThermoFisher SCIENTIFIC
The world leader in serving science

Certificate of Calibration

Pb Only Soil QC (Service)
Document#: FRMXX
Revision: A
Revision Date: Oct. 2, 2009

Serial Number: 26378 Model: XLp 303A Software: 5.2D Date of Q.C.: 6/9/2011

Resolution: 376.01 Escale: 4.48 Source: Cd-109 Inspector: JC

One Reading Each, 90 Seconds (If XL3, Main Filter ONLY)

SIO2 Blank	Certified	Low	High	Measured	Err	
Pb	0	-30	30	-1.219	5.731	<LOD

NIST High	Certified	Low	High	Measured	Err	
Pb	5532	5362	5700	5586.465	99.323	OK

RCRA	Certified	Low	High	Measured	Err	
Pb	500	300	600	509.639	34.716	OK

This certificate is issued in accordance with Thermo Fisher Scientific factory specifications.
The measurements were found to be within specification limits at the time of manufacture and calibration.

Standards are traceable to National Institute of Standards & Technology (NIST) standards.
** - Not Certified

Signed:

ThermoFisher SCIENTIFIC

OGS Project No. 44080

Document#: FRM018
Revision: D
Revision Date: November 20, 2006

Certificate of Calibration

Serial Number:	26378	Model: Niton XLp 30 3A		Software:	5.2D-Dual	Date of Q.C.:	6/6/2011
Resolution:	375	Escale:	4.48	Source:	Cd-109	Inspector:	ED

K+L 20 Sec Readings

Std	L	Lerr	K	Kerr	DI	L Status	K Status
1.0 Surface Wood-1	1.00	0.10	1.00	0.30	1.0	OK	OK
1.0 Surface Wood-2	1.00	0.10	0.90	0.30	1.0	OK	OK
1.0 Buried Wood-1	1.00	0.10	0.90	0.30	2.3	OK	OK
1.0 Buried Wood-2	1.10	0.10	1.00	0.30	2.4	OK	OK
Blank Wood-1	0.01	0.02	0.03	0.23	1.0	OK	OK
Blank Wood-2	0.02	0.02	0.17	0.24	2.5	OK	OK
3.5 Surface Wood-1	3.60	0.20	3.40	0.40	1.2	OK	OK
3.5 Surface Wood-1	3.40	0.20	3.30	0.40	1.2	OK	OK
0.3 Surface Concrete-1	0.30	0.03	0.28	0.37	1.0	OK	OK
0.3 Surface Concrete-2	0.30	0.03	0.21	0.37	1.1	OK	OK
Steel-1	0.06	0.06	0.07	0.36	10.0	OK	OK
Steel-2	0.00	0.02	-0.01	0.36	1.8	OK	OK
Pure Pb-1	10.10	3.60	85.10	1.70	1.7	OK	OK
Pure Pb-2	10.10	6.30	84.50	1.70	1.7	OK	OK
1.0 Surface Drywall-1	1.00	0.10	1.10	0.30	1.1	OK	OK
1.0 Surface Drywall-2	1.00	0.10	1.20	0.30	1.0	OK	OK

K+L 20 Sec Readings

Std	Time	Result	
Drywall-1	1.17	0.02	OK
Drywall-2	1.75	0.00	OK
French Plaster-1	1.76	0.00	OK
French Plaster-2	1.17	0.00	OK

This certificate is issued in accordance with Thermo Fisher Scientific factory specifications.
The measurements were found to be within specification limits at the time of manufacture and calibration.

Standards are traceable to National Institute of Standards & Technology (NIST) standards.

Signed:

Keith MacKenzie
Quality Manager

Serial Number: 26378 Model: XLp 303A Software: 5.2N Date of Q.C.: 6/9/2011

Resolution: 372.85 Escale: 4.48 Source: Cd-109 Inspector: JC

Thin Film (1 reading at 30 seconds each sample)

Element:	Cert:	Read:	Error	
Blank	0	-0.033	0.221	OK
Pb	51.7	53.502	2.697	OK

37mm QC Readings (3 readings at 30 seconds each)

Element:	Cert:	Read:	Error	
Pb	37.5	38.974	8.82	OK

Dust Wipe QC Readings (Pb only) (4 readings at 30 seconds each)

Wipe Type:	Cert:	Read:	Error	
Blank:	N/A	0.371	0.588	OK
Dust Low:	32-48	43.312	10.019	OK
DustHigh:	158-237	189.706	18.777	OK

This certificate is issued in accordance with Thermo Fisher Scientific factory specifications.
The measurements were found to be within specification limits at the time of manufacture and calibration.

Standards are traceable to National Institute of Standards & Technology (NIST) standards.
**** - Not Certified**

Signed:

Valley Safety Services Associates
330 Old Enfield Road, Belchertown, MA 01007
(413) 323-9571

Sealed Source Leak Test Certificate

Sealed Source Information:

Make: IPL Model: XFB-3 Serial: TR1794

Isotope: Cd-109 Activity: 40 mCi Reference Date: 5/1/11

Device Information (Applicable only when sealed source is installed in a device):

Type: ~~ANALYZER~~ Make: NITON Model: XLp Serial: 26378

Leak Test Sample Information:

This leak test sample was acquired as described in the device user's guide or LT-952 kit instructions using Kit # 820660 By: Mike Couture

Date: 5/27/11

Company Name: **Thermo NITON Analyzers LLC (Jim Blute, RSO)**
Address: **900 Middlesex Turnpike, Bldg. 8**
Billerica, MA 01821
Telephone: **(800) 875-1578** Fax: **(978) 670-7411**

Do Not Write Below This Line

Leak Test Analysis Result

Analysis of the above test on 31 May 11 yielded the following:

☒ Statistical analysis of the radioactive count data of this leak test specimen indicated any activity present is less than 0.005 uCi (or 185 Bq). The source may be used as authorized.

☐ Statistical analysis of the radioactive count data of this leak test specimen indicated the activity present is greater than 0.005 uCi (or 185 Bq) of activity present. This source should be considered leaking. Consult your device operations manual; place this unit in storage and make the required notification to your regulatory agency.

YOUR NEXT REQUIRED LEAK TEST FOR THIS DEVICE/SOURCE IS DUE ON OR BEFORE 1 Dec 11

THIS CERTIFICATE IS AN ESSENTIAL RECORD AND SHOULD BE MAINTAINED FOR INSPECTION BY THE REGULATORY AGENCY.

CERTIFICATE #: 820660 **BY:** Jim Blute **DATE:** 31 May 11

New York

INSPECTOR

Certified Lead-Based Paint Professional

Certification No NY-I-16155-2	
Date of Birth 02/21/1982	Expiration Date 02/01/2014
Address 60 Yankee Folly Road New Paltz, NY 12561	
Badge Holder's Name James J. Reber	
Badge Holder's Signature	

If found, drop in any mailbox
Postmaster: Please return to:
US EPA
1200 Pennsylvania Ave, NW
(MC-7404OT)
Washington, DC 20460
or call 1-800-424-LEAD

NEW YORK STATE DEPARTMENT OF HEALTH
WADSWORTH CENTER

Expires 12:01 AM April 01, 2012
Issued April 01, 2011

CERTIFICATE OF APPROVAL FOR LABORATORY SERVICE

Issued in accordance with and pursuant to section 502 Public Health Law of New York State

MR. ROBERT Q. BRADLEY
YORK ANALYTICAL LABORATORIES INC
120 RESEARCH DRIVE
STRATFORD, CT 06615

NY Lab Id No: 10854
EPA Lab Code: CT00106

is hereby APPROVED as an Environmental Laboratory in conformance with the National Environmental Laboratory Accreditation Conference Standards for the category
ENVIRONMENTAL ANALYSES SOLID AND HAZARDOUS WASTE
All approved analytes are listed below:

Characteristic Testing	
Corrosivity	EPA 1110
Ignitability	EPA 1010
Reactivity	SW-846 Ch7 Sec. 7.3
Chlorinated Hydrocarbon Pesticides	
4,4'-DDD	EPA 8081A
4,4'-DDE	EPA 8081A
4,4'-DDT	EPA 8081A
Aldrin	EPA 8081A
alpha-BHC	EPA 8081A
beta-BHC	EPA 8081A
Chlordane Total	EPA 8081A
delta-BHC	EPA 8081A
Dieldrin	EPA 8081A
Endosulfan I	EPA 8081A
Endosulfan II	EPA 8081A
Endosulfan sulfate	EPA 8081A
Endrin	EPA 8081A
Endrin aldehyde	EPA 8081A
Heptachlor	EPA 8081A
Heptachlor epoxide	EPA 8081A
Lindane	EPA 8081A
Methoxychlor	EPA 8081A
Chlorinated Hydrocarbons	
1,2,4-Trichlorobenzene	EPA 8270C
2-Chloronaphthalene	EPA 8270C
Chlorinated Hydrocarbons	
Hexachlorobenzene	EPA 8270C
Hexachlorobutadiene	EPA 8270C
Hexachlorocyclopentadiene	EPA 8270C
Hexachloroethane	EPA 8270C
Chlorophenoxy Acid Pesticides	
2,4,5-T	EPA 8151A
2,4,5-TP (Silvex)	EPA 8151A
2,4-D	EPA 8151A
Dicamba	EPA 8151A
Haloethers	
Bis (2-chloroisopropyl) ether	EPA 8270C
Bis(2-chloroethoxy)methane	EPA 8270C
Metals I	
Barium, Total	EPA 6010B
Cadmium, Total	EPA 6010B
Chromium, Total	EPA 6010B
Lead, Total	EPA 6010B
Nickel, Total	EPA 6010B
Silver, Total	EPA 6010B
Metals II	
Antimony, Total	EPA 6010B
Arsenic, Total	EPA 6010B
Selenium, Total	EPA 6010B

Serial No.: 44032

Property of the New York State Department of Health. Certificates are valid only at the address shown, must be conspicuously posted, and are printed on secure paper. Continued accreditation depends on successful ongoing participation in the Program. Consumers are urged to call (518) 486-5570 to verify the laboratory's accreditation status.

NEW YORK STATE DEPARTMENT OF HEALTH
WADSWORTH CENTER

Expires 12:01 AM April 01, 2012
Issued April 01, 2011

CERTIFICATE OF APPROVAL FOR LABORATORY SERVICE

Issued in accordance with and pursuant to section 502 Public Health Law of New York State

MR. ROBERT Q. BRADLEY
YORK ANALYTICAL LABORATORIES INC
120 RESEARCH DRIVE
STRATFORD, CT 06615

NY Lab Id No: 10854
EPA Lab Code: CT00106

is hereby APPROVED as an Environmental Laboratory in conformance with the National Environmental Laboratory Accreditation Conference Standards for the category ENVIRONMENTAL ANALYSES SOLID AND HAZARDOUS WASTE
All approved analytes are listed below:

Miscellaneous	
Hydrogen Ion (pH)	EPA 9040B
	EPA 9045C
Nitroaromatics and Isophorone	
2,4-Dinitrotoluene	EPA 8270C
2,6-Dinitrotoluene	EPA 8270C
Isophorone	EPA 8270C
Nitrobenzene	EPA 8270C
Petroleum Hydrocarbons	
Diesel Range Organics	EPA 8015 B
Phthalate Esters	
Benzyl butyl phthalate	EPA 8270C
Bis(2-ethylhexyl) phthalate	EPA 8270C
Diethyl phthalate	EPA 8270C
Di-n-butyl phthalate	EPA 8270C
Di-n-octyl phthalate	EPA 8270C
Polychlorinated Biphenyls	
PCB-1016	EPA 8082
PCB-1221	EPA 8082
PCB-1232	EPA 8082
PCB-1242	EPA 8082
PCB-1248	EPA 8082
PCB-1254	EPA 8082
PCB-1260	EPA 8082
Polynuclear Aromatic Hydrocarbons	
Acenaphthene	EPA 8270C
Acenaphthylene	EPA 8270C
Benzo(a)anthracene	EPA 8270C
Benzo(a)pyrene	EPA 8270C
Benzo(b)fluoranthene	EPA 8270C
Benzo(ghi)perylene	EPA 8270C
Chrysene	EPA 8270C
Dibenzo(a,h)anthracene	EPA 8270C
Fluoranthene	EPA 8270C
Fluorene	EPA 8270C
Indeno(1,2,3-cd)pyrene	EPA 8270C
Naphthalene	EPA 8270C
Phenanthrene	EPA 8270C
Pyrene	EPA 8270C
Priority Pollutant Phenols	
2,4,6-Trichlorophenol	EPA 8270C
2,4-Dichlorophenol	EPA 8270C
2,4-Dimethylphenol	EPA 8270C
2,4-Dinitrophenol	EPA 8270C
2-Chlorophenol	EPA 8270C
2-Methyl-4,6-dinitrophenol	EPA 8270C
2-Nitrophenol	EPA 8270C
4-Chloro-3-methylphenol	EPA 8270C
4-Nitrophenol	EPA 8270C
Pentachlorophenol	EPA 8270C

Serial No.: 44032

Property of the New York State Department of Health. Certificates are valid only at the address shown, must be conspicuously posted, and are printed on secure paper. Continued accreditation depends on successful ongoing participation in the Program. Consumers are urged to call (518) 485-5570 to verify the laboratory's accreditation status.

NEW YORK STATE DEPARTMENT OF HEALTH
WADSWORTH CENTER

Expires 12:01 AM April 01, 2012
Issued April 01, 2011

CERTIFICATE OF APPROVAL FOR LABORATORY SERVICE

Issued in accordance with and pursuant to section 502 Public Health Law of New York State

MR. ROBERT Q. BRADLEY
YORK ANALYTICAL LABORATORIES INC
120 RESEARCH DRIVE
STRATFORD, CT 06615

NY Lab Id No: 10854
EPA Lab Code: CT00106

Is hereby APPROVED as an Environmental Laboratory in conformance with the National Environmental Laboratory Accreditation Conference Standards for the category ENVIRONMENTAL ANALYSES SOLID AND HAZARDOUS WASTE
All approved analytes are listed below:

Priority Pollutant Phenols	
Phenol	EPA 8270C
Volatile Aromatics	
1,2-Dichlorobenzene	EPA 8260B
1,3-Dichlorobenzene	EPA 8260B
1,4-Dichlorobenzene	EPA 8260B
Benzene	EPA 8260B
Chlorobenzene	EPA 8260B
Ethyl benzene	EPA 8260B
Toluene	EPA 8260B
Total Xylenes	EPA 8260B
Volatile Halocarbons	
1,1,1-Trichloroethane	EPA 8260B
1,1,2,2-Tetrachloroethane	EPA 8260B
1,1,2-Trichloroethane	EPA 8260B
1,1-Dichloroethane	EPA 8260B
1,1-Dichloroethene	EPA 8260B
1,2-Dichloroethane	EPA 8260B
2-Chloroethylvinyl ether	EPA 8260B
Bromodichloromethane	EPA 8260B
Bromoform	EPA 8260B
Bromomethane	EPA 8260B
Carbon tetrachloride	EPA 8260B
Chloroethane	EPA 8260B
Chloroform	EPA 8260B
Chloromethane	EPA 8260B
Volatile Halocarbons	
cis-1,3-Dichloropropene	EPA 8260B
Dibromochloromethane	EPA 8260B
Dichlorodifluoromethane	EPA 8260B
Methylene chloride	EPA 8260B
Tetrachloroethene	EPA 8260B
trans-1,3-Dichloropropene	EPA 8260B
Trichloroethene	EPA 8260B
Trichlorofluoromethane	EPA 8260B
Vinyl chloride	EPA 8260B
Sample Preparation Methods	
	EPA 1310
	EPA 1311
	EPA 3005A
	EPA 3010A
	EPA 3031
	EPA 3040A
	EPA 3050B
	EPA 3060A
	EPA 3545
	EPA 3550B
	EPA 3580
	EPA 3585
	EPA 5030B
	EPA 5035

Serial No.: 44032

Property of the New York State Department of Health. Certificates are valid only at the address shown, must be conspicuously posted, and are printed on secure paper. Continued accreditation depends on successful ongoing participation in the Program. Consumers are urged to call (518) 485-5570 to verify the laboratory's accreditation status.

NEW YORK STATE DEPARTMENT OF HEALTH
WADSWORTH CENTER

Expires 12:01 AM April 01, 2012
Issued April 01, 2011

CERTIFICATE OF APPROVAL FOR LABORATORY SERVICE

Issued in accordance with and pursuant to section 502 Public Health Law of New York State

MR. ROBERT Q. BRADLEY
YORK ANALYTICAL LABORATORIES INC
120 RESEARCH DRIVE
STRATFORD, CT 06615

NY Lab Id No: 10854
EPA Lab Code: CT00106

is hereby APPROVED as an Environmental Laboratory for the category
ENVIRONMENTAL ANALYSES SOLID AND HAZARDOUS WASTE
All approved subcategories and/or analytes are listed below:

Chlorinated Hydrocarbon Pesticides	
Toxaphene	EPA 8081A
Haloethers	
4-Bromophenylphenyl ether	EPA 8270C
4-Chlorophenylphenyl ether	EPA 8270C
Metals I	
Barium, Total	EPA 6020
Cadmium, Total	EPA 6020
Calcium, Total	EPA 6010B
Chromium, Total	EPA 6020
Copper, Total	EPA 6010B
	EPA 6020
Iron, Total	EPA 6010B
Lead, Total	EPA 6020
Magnesium, Total	EPA 6010B
Manganese, Total	EPA 6010B
	EPA 6020
Nickel, Total	EPA 6020
Potassium, Total	EPA 6010B
Silver, Total	EPA 6020
Sodium, Total	EPA 6010B
Metals II	
Aluminum, Total	EPA 6010B
	EPA 6020
Antimony, Total	EPA 6020
Metals II	
Arsenic, Total	EPA 6020
Beryllium, Total	EPA 6010B
	EPA 6020
Chromium VI	EPA 7196A
Mercury, Total	EPA 7471A
Selenium, Total	EPA 6020
Vanadium, Total	EPA 6010B
	EPA 6020
Zinc, Total	EPA 6010B
	EPA 6020
Metals III	
Cobalt, Total	EPA 6010B
	EPA 6020
Molybdenum, Total	EPA 6010B
Thallium, Total	EPA 6010B
	EPA 6020
Tin, Total	EPA 6010B
Nitrosoamines	
N-Nitrosodi-n-propylamine	EPA 8270C
Polynuclear Aromatic Hydrocarbons	
Benzo(k)fluoranthene	EPA 8270C
Priority Pollutant Phenols	
2-Methylphenol	EPA 8270C

Serial No.: 44033

Property of the New York State Department of Health. Certificates are valid only at the address shown, must be conspicuously posted, and are printed on secure paper. Continued accreditation depends on successful ongoing participation in the Program. Consumers are urged to call (518) 485-5570 to verify the laboratory's accreditation status.

NEW YORK STATE DEPARTMENT OF HEALTH
WADSWORTH CENTER

Expires 12:01 AM April 01, 2012
Issued April 01, 2011

CERTIFICATE OF APPROVAL FOR LABORATORY SERVICE
Issued in accordance with and pursuant to section 502 Public Health Law of New York State

MR. ROBERT Q. BRADLEY
YORK ANALYTICAL LABORATORIES INC
120 RESEARCH DRIVE
STRATFORD, CT 06615

NY Lab Id No: 10854
EPA Lab Code: CT00106

is hereby APPROVED as an Environmental Laboratory for the category
ENVIRONMENTAL ANALYSES SOLID AND HAZARDOUS WASTE
All approved subcategories and/or analytes are listed below:

Volatile Organics

4-Methyl-2-Pentanone EPA 8260B

Sample Preparation Methods

EPA 9010B

Serial No.: 44033

Property of the New York State Department of Health. Certificates are valid only at the address shown, must be conspicuously posted, and are printed on secure paper. Continued accreditation depends on successful ongoing participation in the Program. Consumers are urged to call (518) 485-5570 to verify the laboratory's accreditation status.

APPENDIX E

PHOTOGRAPH OF POSITIVE PCB SAMPLE

Maintenance Building Door

Maintenance Building Door Caulk

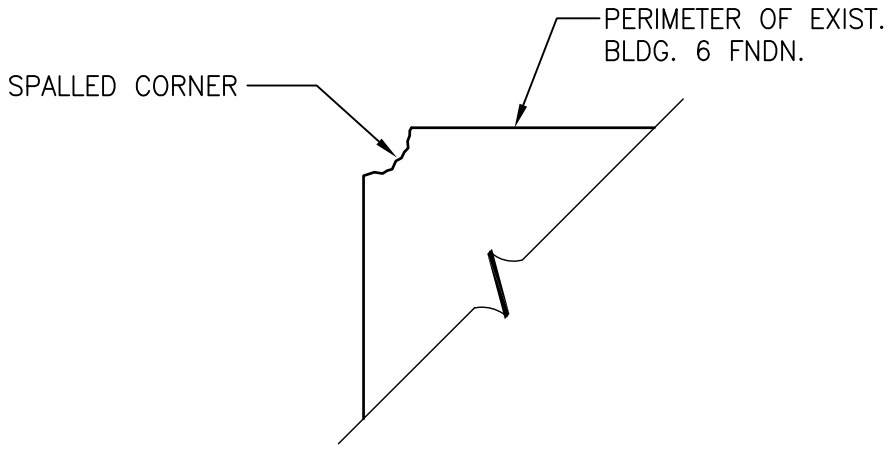

EXIST. CONDITION @ 50% OF BLDG. 6 EXTERIOR WALL LINE FNDN.

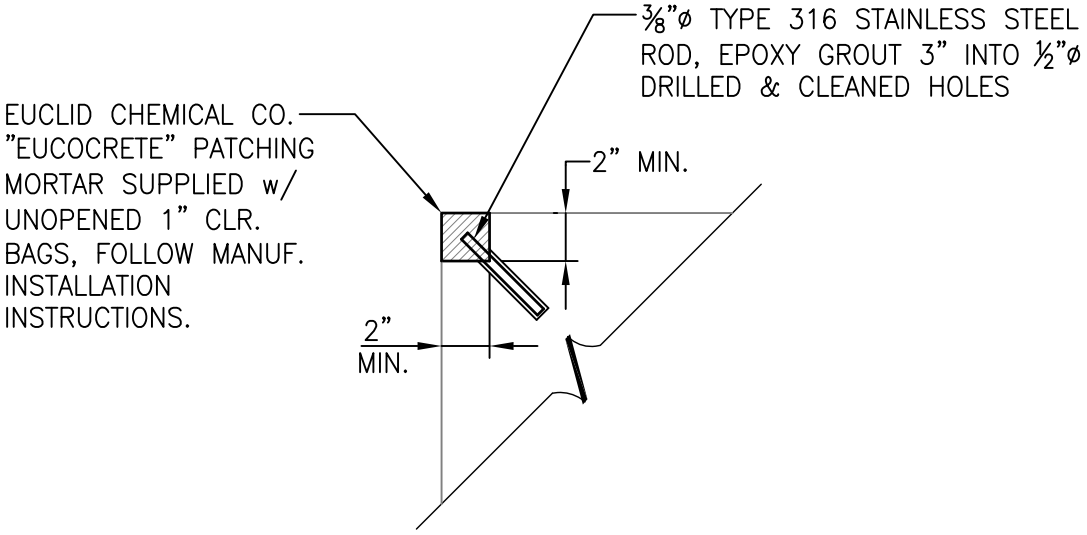

BLDG. 6 FNDN. REPAIR FOR 50% OF EXTERIOR WALL LINE FNDN.

ADDENDUM #1	1/20/12
SHEET TITLE:	BLDG. 6 FNDN. REPAIR
PROJECT:	PROVIDE ROOFING AND SIDING MacCORMICK SECURE CENTER, OFC BROOKTONDALE, NY 14817

NYS OFFICE OF GENERAL SERVICES
Serving New York

CONTRACT:	CONSTRUCTION
PROJ. NO:	44080-C
DATE:	1/20/12
DRAWN:	JN
APPROVED:	D.H.

WARNING: THE ALTERATION OF THIS MATERIAL IN ANY WAY, UNLESS DONE UNDER THE DIRECTION OF A COMPARABLE PROFESSIONAL, I.E. ARCHITECT FOR AN ARCHITECT, ENGINEER FOR AN ENGINEER OR LANDSCAPE ARCHITECT FOR A LANDSCAPE ARCHITECT, IS A VIOLATION OF THE NEW YORK STATE EDUCATION LAW AND/OR REGULATIONS AND IS A CLASS 'A' MISDEMEANOR.

DWG NO: SK-1

8.5x11 PLOT SHEET