STATE OF NEW YORK
OFFICE OF GENERAL SERVICES
DESIGN AND CONSTRUCTION GROUP
THE GOVERNOR NELSON A. ROCKEFELLER
EMPIRE STATE PLAZA
ALBANY, NY 12242

ADDENDUM NO. 3 TO PROJECT NO. 44180

CONSTRUCTION WORK, ELECTRICAL WORK, AND HVAC WORK
REPLACE SWITCHGEAR
PERRY B. DURYEA STATE OFFICE BLDG.
250 VETERANS MEMORIAL HIGHWAY
HAUPPAUGE, NY 11788

August 25, 2016

NOTE: This Addendum forms a part of the Contract Documents. Insert it in the Project Manual. Acknowledge receipt of this Addendum in the space provided on the Bid Form.

CONSTRUCTION WORK SPECIFICATION GROUP

1. SECTION 026500 – UNDERGROUND STORAGE TANK REMOVAL: Delete this Section in its entirety.

ELECTRICAL WORK SPECIFICATION GROUP

2. Page 261313-10, Subparagraph 2.06 A.10.: Delete this Subparagraph in its entirety and replace with the following:
   "10. Control Power Transformers: Provide draw-out control power transformers on each bus that include primary fuse protection and secondary breaker protection in accordance with the NEC. Control Power Transformers are for building auxiliary power only. Switchgear control power shall be from the 125VDC station battery system to be provided with the switchgear."

3. Page 261315-10, Subparagraph 1.13 B. 1.: Delete this Subparagraph in its entirety and replace with the following:
   "1. All Bus 2 breakers (M2, F2, T1 and G1) shall open."

4. Page 261216-2, Subparagraph 2.01 A.1.: Delete this Subparagraph in its entirety and replace with the following
   "1. 2000/2.699kVA AA/FA."

5. Page 261216-2, Subparagraph 2.01 A.6.: Delete this Subparagraph in its entirety and replace with the following
   "6. Insulation Temperature Rise: 80deg C, maximum rise above 40deg C."

6. SECTION 262413 – LOW VOLTAGE SWITCHGEAR: Discard the Section bound in the Project Manual and substitute the attached Section (pages 262413-1 thru 262413-14) noted "REVISED 8-24-2016".

7. SECTION 271524 – OPTICAL FIBER CABLES: Discard the Section bound in the Project Manual and substitute the attached Section (pages 271524-1 thru 271524-8) noted "REVISED 8-24-2016".

8. SECTION 283101 – PROTECTED PREMISES FIRE ALARM SYSTEM: Discard the Section bound in the Project Manual and substitute the attached Section (pages 283101-1 thru 283101-11) noted "REVISED 8-24-2016".

HVAC WORK SPECIFICATION GROUP

9. SECTION 026500 – UNDERGROUND STORAGE TANK REMOVAL: Add the attached Section (pages 026500-1 thru 026500-10) to the Project Manual.

CONSTRUCTION WORK DRAWINGS

10. Revised Drawing:
    a. Drawing No. C-101 noted "REVISED DRAWING 8-24-16" accompanies this Addendum and supersedes the same numbered originally issued drawing.

ELECTRICAL WORK DRAWINGS

11. Revised Drawings:
    a. Drawing Nos. CE-201, CE-401, CE-501, E-102, E-403, E-405, E-602, E-603, E-609, and E-610 noted "REVISED DRAWING 8-24-16" accompany this Addendum and supersede the same numbered originally issued drawings.

HVAC WORK DRAWINGS

12. Revised Drawings:
    a. Drawing No. CM-201 noted "REVISED DRAWING 8-24-16" accompanies this Addendum and supersedes the same numbered originally issued drawing.

END OF ADDENDUM

Margaret F. Larkin
Executive Director

SECTION 026500

UNDERGROUND STORAGE TANK REMOVAL

PART 1 - GENERAL

1.1 RELATED WORK SPECIFIED ELSEWHERE

A. Removals, Cutting, and Patching: Section 017329.

B. Earthwork: Section 310000.

C. Erosion and Sediment Control: Section 312500.

1.2 SUBMITTALS

A. Removal procedures and schedule.

B. Plan of Operations:

1. Include, at a minimum, a description of project approach covering methods for sampling, analysis, removal and disposal of all waste. Additionally the Plan of Operations shall include:

a. Description of soil removal methods to be employed; including excavation protection.
b. Description of a method for the decontamination of the excavator bucket prior to the procurement of soil samples at the completion of principal excavation work in each tank area.
c. Description of the waste segregation and staging methods to be used for soils, poly sheeting, and spent personal protective equipment.
d. Methods to be used for dewatering.
e. Methods to be used for cleaning of tank and piping.
f. Methods to be used for placement and compaction of backfill materials.
g. Identification of all waste transporters and disposal facilities including copies of all required certifications and permits.
h. Description methods to be employed to prevent storm water pollution from staged petroleum-contaminated soil, if encountered.
i. Required certifications and permits including copies of valid permits for all waste haulers, disposal sites, and weigh scales

2. Submit at a minimum of two (2) weeks prior to commencing work.
3. Waste shall include, but not be limited to tank, piping, ballasts, concrete pad, tank contents, wash water, soils, samples, and used personal protective equipment.

C. Copy of notifications to the New York State Department of Environmental Conservation, informing the Department of the planned closure and removal of the tank.

D. Record Documents:

1. Completed waste manifests (or bill of lading for non-hazardous materials) as described herein, accounting for all materials removed from the site.

E. Health and Safety Plan, (HASP): Including regulations for confined space entry (29 CFR 1910.146) and other applicable portions of 29 CFR 1926, that addresses exposure of workers to residual product and accumulated sludge that may need to be removed from the tanks.

1. The Owner's Representative will review and comment on the HASP but will neither approve nor disapprove it.

F. Confined Space Entry Permit and the worker training certificates required to clean out the tank once it is excavated.

G. Quality Control Submittals:

1. Excavation Procedure: Submit a lay out drawing or detailed outline of intended excavation procedure for the Owner's information.
2. This submittal will not relieve the Contractor of responsibility for the successful performance of intended excavation methods.

H. Manifests: Contractor shall submit copies of all load tickets and manifests, if applicable. Certification of destination, receipt, and disposal of demolition materials must also be submitted.

I. Landfill or scrap yard records indicating receipt and acceptance of UST and any contaminated soil by a landfill facility licensed to accept such materials.

J. UST Closure Report

1.3 REQUIRED CERTIFICATIONS AND LICENSES

A. Employees involved in hazardous waste operations shall have been trained in accordance with OSHA Final Standards to Protect Workers in Hazardous Waste Operations 29 CFR 1910.120 or most recent revision thereof.

B. Waste haulers shall maintain a valid 6 NYCRR Part 364 Permit.

1.4 REGULATORY REQUIREMENTS

A. Abide by all applicable rules and regulations, including but not limited to the following:

1. New York State Uniform Fire Prevention and Building Code.
2. New York State Petroleum Bulk Storage Regulations, 6 NYCRR Part 613.
3. New York State Department of Environmental Conservation's memorandum for Permanent Closure of Petroleum Storage Tanks (and most recent revision).

4. New York State Department of Labor.
5. NYSDEC Spill Technology and Remediation Series Memo No. 1 - Petroleum Contaminated Soil Guidance Policy 1992 (use the most current version).
6. NYSDEC Spill Technology and Remediation Series Memo No. 14 - Site Assessment at Bulk Storage Facilities (use the most current version).
7. American Petroleum Institute, Recommended Practice 1604, Second Edition, December, 1987, "Removal and Disposal of Used Underground Petroleum Storage Tanks", and revisions thereof.
8. Federal Underground Storage Tank (UST) Regulations, 40 CFR Part 280.
9. Applicable OSHA worker safety regulations.
10. State, county, and federal regulations pertaining to the handling, storage, transport, and disposal of wastes generated during the project.
11. Coordinate and obtain all permits as required by permitting authorities.

1.5 ABBREVIATIONS

A. The following terms shall have the meanings ascribed to them in this Section, wherever they appear in this Section.

1. API: American Petroleum Institute.
2. FRP: Fiberglass-Reinforced Plastic.
3. NFPA: National Fire Protection Association.
4. NYSDEC: New York State Department of Environmental Conservation.
5. NYSDOT: New York State Department of Transportation.
6. OSFM: Office of the State Fire Marshal.
7. OSHA: Occupational Safety and Health Administration.
8. PBS: Petroleum Bulk Storage.
9. USEPA: United States Environmental Protection Agency.
10. UST: Underground Storage Tank.
11. HASP: Health and Safety Plan.

1.6 NOTIFICATION

A. In accordance with 6NYCRR 613.9 (c) reporting of out-of-service tanks, the Owner’s Representative will notify New York State Department of Environmental Conservation (NYSDEC) thirty (30) days prior to permanent closure of the tank.

B. Notify (by telephone) the Owner’s Representative at least 48 hrs prior to beginning closure operations at the tank.

C. If contaminated soils are encountered, the Owner’s Representative will notify the NYSDEC Spills Hotline.

1.7 EXISTING CONDITIONS

A. Protect and safeguard from damage all existing structural systems, fencing, equipment, and surfaces that will remain. Contractor Repair any damage to structures, appurtenances or the landscape not scheduled for removal work.

1.8 ENVIRONMENTAL OVERSIGHT

A. The Owner’s Representative will secure the services of an authorized Environmental Consultant to act on his behalf for field observation and to provide analysis of wastes destined for disposal.

B. The Environmental Consultant will advise the Owner’s Representative on environmental matters.

1. Such advisement does not relieve the Contractor's obligation to comply with all applicable environmental and health and safety regulations promulgated by the federal, state, or local governments.
2. No activity on the part of the Environmental Professional represents the Contractor's compliance with applicable environmental or health and safety regulations.

PART 2 - PRODUCTS – NOT APPLICABLE

PART 3 - EXECUTION

3.1 PREPARATION

A. Contact the New York State Department of Environmental Conservation (NYSDEC) Regional Office at least 30 business days prior to the removal of the underground and aboveground petroleum storage tanks.

B. Locate and clearly mark all subsurface utilities in the area of excavation. Conduct activities to minimize interference with, and to protect the existing surfaces of, adjacent structures or utilities.

C. Provide, erect, and maintain temporary barriers and security devices.

D. Conduct operations with minimum interference to public or private thoroughfares. Do not close or obstruct drive areas or sidewalks without permits.

E. Prevent movement or settlement of adjacent structures. Provide bracing and shoring.

F. Remove and dispose of abandoned conduit or piping within excavated areas and plug ends.

1. Identify disconnection locations on Project Record Documents.

G. Perform tank removal in a manner that will minimize dust, noise, and other nuisance. Maintain haul routes for disposal of material clean and free of debris.

H. Provide monitoring equipment at site as required by the Site Health and Safety Plan. Operate and maintain in accordance with manufacturer’s recommendations.

I. Perform the Work with consideration for facility personnel and the public. Maintain barriers between work areas and adjacent facilities at all times, with necessary signs, lights, bracing and guards for the protection of all facility personnel, the public, and existing facilities.

J. Schedule the Work in advance with the Owner's Representative to coordinate work schedules.

K. Notify the Owner's Representative minimum of 30 days in advance of tank removal or abandonment.

1. Alternative arrangements must be approved in writing by the Owner's Representative.
2. The Owner's Representative will arrange and pay for a certified New York State environmental testing laboratory to analyze samples of soils, liquids, sludges and ground water destined for disposal.

3.2 STORAGE TANK LIQUID REMOVAL

A. Prior to excavation around the UST, empty the tank as follows:

1. Remove all product to its lowest draw-off point.

a. Contractor shall be responsible for heating the fuel for removal, if necessary.

2. Drain and flush piping into the tank (one or two gallons of water should be sufficient).
3. Pump out the liquid below the draw-off point (tank bottom).

a. Use an explosion-proof hand or vacuum pump.
b. Assume 50 gallons of fuel remain in each tank below the lowest draw-off point.
c. Pump out the entire tank bottom including the remaining product layer.

4. Bond equipment to tank and ground tank to a separate ground when purging tank with compressed air or inert gas under pressure.
5. Turn over product removed from tank to the State as directed by Owner's Representative.

a. If contents are to be disposed, tank contents shall be properly disposed of in accordance with NYSDEC, NYSDOT and local regulations.
b. Provide proof of proper disposal to Environmental Consultant and Owner's Representative.

3.3 TANK AND PIPING REMOVAL

A. Inert the interior atmosphere before extracting the tank from its location.

B. Excavation around existing UST:

1. Excavate to the top of the tank and stockpile soil as specified in Section 310000, Earthwork. In the event contaminated soil and/or groundwater is discovered remove and temporarily stockpile the material as specified herein this Section.
2. Dig down to expose upper half of tank. During excavation, exercise extreme caution in order to maintain the integrity of the UST.
3. Perform excavation in the presence of the Owner's Representative who will check material for possible contamination using a organic vapor meter (OVM). Place excavated material in a separate stockpile as directed, pending disposal.

C. Disconnect suction, inlet, gauge and all other tank fixtures, except the vent line.

D. Temporarily plug all tank openings, complete the excavation, and remove the tank, placing it in a secure location. Tank must be blocked to prevent movement.

E. Inspect the aboveground storage tank concrete pad for signs of contamination. If it is found to be contaminated, demolish and remove the concrete pad. Stockpile as directed by the Owner's Representative.

F. Spills or drips shall be contained to prevent contamination of soils during removal.

G. Excavate to uncover existing piping associated with the tank.

1. Remove all underground piping.
2. Do not rupture tank or pipelines.
3. Pipe trenches shall remain open for inspection by Owner's Representative.

H. Install the new underground fuel tanks according to Section 231313.

I. Backfill the tank and pipe excavations with clean Type 2 fill material, compact, grade, place topsoil and seed or pavement to restore area to original condition. Refer to Section 310000.

J. Cease operations and notify the Owner's Representative immediately if adjacent structures appear to be endangered. Do not resume operations until corrective measures are taken, and written approval is received by the Owner's Representative.

K. Except where noted otherwise, immediately remove demolished material from site.

L. Do not burn or bury materials on site.

M. Excavate, segregate, stockpile, and protect soils with evidence of possible petroleum contamination (by visible staining, odors, or by the readings on the Environmental Consultant's field instrumentation) in accordance with NYSDEC STARS No. 1 and other applicable NYSDEC guidance.

1. Such soils shall be placed on poly sheeting (6-mil minimum) bermed to prevent run-off, covered with same type of poly to keep precipitation off of the staged soil, and the cover shall be secured to keep the pile dry.

N. Remove and properly dispose of all tank fluids. Remove underground tank, components, and piping.

O. Clean tank, components, and piping in accordance with applicable regulations and remove tank, components, and piping from site.

P. Assist the Environmental Consultant with sampling of soils in the proximity of the tanks in accordance with NYSDEC STARS No. 1 and other applicable NYSDEC guidance. Provide excavator with bucket for gathering samples; decontaminate bucket prior to collecting each sample.

Q. Backfill additional areas excavated to remove of petroleum-contaminated soils, as directed by the Owner's Representative.

R. Rough grade, and compact areas affected by underground storage tank removals and resurface in accordance with Section 310000 Earthwork.

S. Dispose of removed materials from the site as Work progresses. Leave site in clean condition.

T. Dispose of all wastewater off-site in accordance with applicable federal, state, and local regulations.

U. Stockpile petroleum-contaminated soil encountered during the work.

V. Coordinate with the Owner's Representative and Environmental Consultant in providing soil samples for lab testing and analysis by Environmental Consultant.

W. Submit waste disposal documents. Organize and index records, and include the following:

1. Waste characterization and waste profiles submitted to each permitted disposal facility. Include documentation of waste stream acceptance by the disposal facility.
2. Bills of lading or receipts or certifications and weigh tickets generated during the handling and disposal process.
3. Copies of all written approvals from duly authorized persons and agencies for the discharge of wastewater, where allowed, into storm or sanitary sewer systems, onto the ground, or into the groundwater.
4. Copies of 6 NYCRR Part 364 permits for waste haulers used in the work, with a separate listing of the material hauled by each entity listed and the final disposal locations of each waste material removed from the site.

3.4 FUEL OIL PIPE FLUSHING AND ABANDONMENT

A. General:

1. Contractor shall coordinate work between all Subcontractors, sections, and trades

required for the proper completion of the work.

2. Contractor is responsible for the health and safety of all Subcontractor workers during progress of the work.
3. Contractor is solely responsible for providing coordination and obtaining permits with owners of the various utilities serving, or present at, the Project Site as required to complete termination and demolition work. Coordinate as required for termination of service, temporary termination of service, relocation of facilities, abandonment of facilities, demolition of facilities, cutting, capping, and bracing. Comply at all times

B. Submittals:

1. Abandonment procedures required by the owner of each utility prior to performing the work of utility termination/cutting/capping/plugging.
2. Material specifications and shop drawings for all materials and equipment furnished under this section, prior to performing the work of utility abandonment.
3. As-built drawings showing locations of all terminated/cut/capped/plugged utilities and service disconnections at or before project close-out.

C. Backfill:

1. Replace soil material excavated for utility removal, termination or abandonment in accordance with applicable Specifications.

   a. Backfilling to grade is required with Compacted Granular Fill.

2. Provide OSHA-compliant barriers or smooth edges of all excavations to produce a stable slope, with smooth grade transitions and no vertical cuts from top of slope to lower limits of the excavation in compliance with the requirements of OSHA. Maximum slope into any excavated area under ideal soil conditions shall be 1 to 1 ½, vertical : horizontal.

D. Protection:

1. Subcontractor shall take measures to protect from damage those utilities, or portions thereof, which are designated to remain. Provide protection as required such as marking, blocking, bracing, stabilizing, supporting, and retaining.
2. Utilities to remain damaged by Subcontractor shall be repaired/replaced to the satisfaction of the utility owner at Contractor’s expense.

E. Documentation:

1. Contractor shall provide as-built documentation for each utility termination, including location, depth, and method and material of construction for termination. Such asbuilt documentation shall be on the appropriate site plans.
2. Contractor shall physically mark the location of each subsurface utility termination with a surveyor’s stake, with such stake identifying the utility type and depth below grade. Where the use of stakes at a utility termination location may be inappropriate, Subcontractor shall provide staking at an adjacent location(s) and include appropriate offset dimensions or other suitable

demarcation.

3.5 STORAGE TANK CLEANING

A. Conduct tank cleaning procedures in accordance with NYSDEC guidance documents and API Recommended Practice 1604.

B. Measure levels of combustible vapors and oxygen with a Combustible Gas Indicator (CGI), and initiate ventilation of the tank, if needed:

1. Ventilate tank using a small gas exhauster until the vapor concentration is reduced to 10 percent or less of the lower explosive limit (LEL).
2. Oxygen content shall range from 19.5 to 23.5 percent.

C. Ensure final vapor and oxygen concentrations are within the requirements noted above before proceeding to cut and dismantle the tank for its disposal.

1. Methods for ensuring the tank has been made safe are outlined in Section 7 of NYSDEC's PBS guidance document "Permanent Closure of Petroleum Storage Tanks."

D. Cut openings in tank to facilitate tank cleaning after vapor and oxygen concentrations have been met.

1. Total surface area of holes cut into tank shall be minimum of 2% of total surface area of tank, or a minimum of 9 square feet each opposite side or end.
2. Maintain a minimum of two fire extinguishers on-site during cutting of tank.

E. Perform tank cleaning activities twenty-four (24) hours of tank removal from excavation site.

F. Tank Cleaning: Include mopping, scraping and sweeping the interior of the tank. If applicable, comply with OSHA's confined space entry regulations.

G. Collect, contain and place residuals in a United States Department of Transportation approved drum for transporting and disposal.

3.6 CONTAMINATED MATERIAL DISPOSAL DOCUMENTATION

A. Submit contaminated material disposal documentation prior to payment of any units involving disposal of contaminated materials.

3.7 DISPOSAL OF TANKS AND PIPING

A. Dispose of tanks and all removed appurtenances from the premises as quickly as possible, preferably the same day as removed from the excavation.

B. Legally dispose or recycle the removed tanks and appurtenances in accordance with all local, State and Federal regulations.

C. Obtain disposal facility receipts noting proper tank and cleaning material disposal. Submit receipts to the Owner's Representative.

END OF SECTION

SECTION 262413

LOW VOLTAGE SWITCHGEAR

PART 1 GENERAL

1.01 REFERENCES

A. ANSI C37.20.1, NEMA, and UL 1558.

1.02 DEFINITIONS

A. ITIC (Information Technology Industry Council) Curve: Describes how much or how little voltage IT equipment can sustain without damage and over what length of time.

1.03 SUBMITTALS

A. Waiver of Submittals: The "Waiver of Certain Submittal Requirements" in Section 013300 does not apply to this Section.

B. Submittals Package: Submit the shop drawings, product data, and quality control submittals specified below at the same time as a package.

C. Shop Drawings; include the following for each switchgear:
   1. Front and plan view with overall dimensions.
   2. Details showing type of construction and available conduit space.
   3. Voltage rating, and continuous current rating of the through bus and distribution sections.
   4. One line diagram including normal and fault ratings, phase rotations, and major component locations.
   5. Bill of material with Manufacturers' names and model numbers for major components.
   6. Enclosure details including paint color.
   7. Enumeration of each circuit breaker including frame size, ATE, number of poles, and interrupting capacity.
      a. Indicate circuit breakers are suitable for the switchgears' fully rated equipment rating. Series rated combinations will not be considered.
   8. A coordinated selective scheme between the main device and feeder devices so that under fault conditions the feeder device clears the fault while the main device remains closed. Submit time current characteristic curves for each overcurrent protective device contained within the switchgear on a single log-log graph. Zone selective interlocking shall be installed for all switchgear rated above 1600A.
   9. A statement for each switchgear indicating if it will, or will not, bear a UL label. If a section cannot bear a UL label, state the specific reasons why it is not qualified to bear the UL label.
   10. Terminal locations and details for phase, neutral and ground connections.
   11. Phase-to-phase clearances and phase-to-ground clearances.
   12. Bus bar connection and support details and bus materials.

13. Insulator and barrier details and materials.
14. Circuit breaker, trip unit, and current sensor descriptions.
15. Trip unit time-current characteristic curves.
16. Circuit breaker controls details, schematic and connection diagrams, and sequences of operation.
17. Secondary metering description, including details on the current transformers, potential transformers, ammeters, voltmeters, and meter switches.
18. Schematic and connection diagrams for the secondary metering systems.
19. Schematic and connection diagrams for the high resistance grounding system.

20. Nameplate engraving.

D. Product Data:
1. Catalog sheets, specifications and installation instructions.
   a. For devices equipped with ground fault protection, include information sheets describing system testing instructions and test form which comply with UL 891 requirements.
2. Bill of materials.
3. Name, address and telephone number of nearest fully equipped service organization.

E. Quality Control Submittals:
1. Company Field Advisor Data: Include:
   a. Name, business address and telephone number of Company Field Advisor secured for the required services.
   b. Certified statement from the Company listing the qualifications of the Company Field Advisor.
   c. Services and each product for which authorization is given by the Company listed specifically for this project.
2. Factory Test Reports

F. Contract Closeout Submittals:
1. System acceptance test report.
2. Certificate: Affidavit, signed by the Company Field Advisor and notarized, certifying that the system meets the contract requirements and is operating properly.
3. Operation and Maintenance Data: Deliver 2 copies, covering the installed products, to the Director's Representative.
   a. Switchgear As-Built Drawings

1.04 QUALITY ASSURANCE

A. Equipment Qualifications For Products Other Than Those Specified:
1. At the time of submission provide written notice to the Director of the intent to propose an “or equal” for products other than those specified. Make the “or equal” submission in a timely manner to allow the Director sufficient time to review the proposed product, perform inspections and witness test demonstrations.
2. If products other than those specified are proposed for use furnish the name, address, and telephone numbers of at least 5 comparable

installations that can prove the proposed products have performed satisfactorily for 3 years. Certify in writing that the owners of the 5 comparable installations will allow inspection of their installation by the Director's Representative and the Company Field Advisor.

a. Make arrangements with the owners of 2 installations (selected by the Director) for inspection of the installations by the Director's Representative. Also obtain the services of the Company Field Advisor for the proposed products to be present. Notify the Director a minimum of 3 weeks prior to the availability of the installations for the inspection, and provide at least one alternative date for each inspection.

b. Only references from the actual owner or owner's representative (e.g., Maintenance Supervisor, etc.) will be accepted. References from dealers, system installers or others, who are not the actual owners of the proposed products, are not acceptable.

1) Verify the accuracy of all references submitted prior to submission and certify in writing that the accuracy of the information has been confirmed.

3. The product manufacturer shall have test facilities available that can demonstrate that the proposed products meet the contract requirements.

a. Make arrangements with the test facility for the Director's Representative to witness test demonstrations. Also obtain the services of the Company Field Advisor for the proposed product to be present at the test facility. Notify the Director a minimum of 3 weeks prior to the availability of the test facility, and provide at least one alternative date for the testing.

4. Provide written certification from the manufacturer that the proposed products are compatible for use with all other equipment proposed for use for this system and meet all contract requirements.

B. Company Field Advisor: Secure the services of a Company Field Advisor for a minimum of 8 working hours for the following:

1. Render advice regarding switchgear installation, and final adjustment and testing of the switchgear devices.
2. Witness final system test and then certify with an affidavit that the switchgear is installed in accordance with the contract documents and is operating properly.
3. Train facility personnel on the operation and maintenance of the switchgear devices (minimum of two 1 hour sessions).
4. Explain available service programs to facility supervisory personnel for their consideration.

C. Service Availability: A fully equipped service organization shall be available to service the completed Work.

1.05 DELIVERY, STORAGE AND HANDLING

A. Protection: Provide supplemental heating devices, such as incandescent lamps or low wattage heaters within the enclosure or under a protective cover to control dampness. Maintain this protection from the time equipment is delivered to the site until it is energized.

B. Deliver the equipment in shipping split sizes that can be moved past obstructions in delivery path. This will be coordinated with the Electrical Contractor.

C. The Electrical Contractor shall coordinate delivery of the unit substations to allow movement into designated space. The Electrical Contractor is responsible for all rigging required to off-load the equipment from the delivery truck and move it to the location shown on the drawings or to a designated staging area.

PART 2 PRODUCTS

2.01 SWITCHGEAR

A. The listing of specific manufacturers does not imply acceptance of their products that do not meet the specified ratings, features and functions. Manufacturers listed are not relieved from meeting these specifications in their entirety. Manufacturer for 480V Low Voltage Switchgear shall be the same manufacturer as the Medium Voltage Metal Clad Switchgear.

B. Eaton Corp.'s Magnum DS, Square D Co.'s Power Zone 4, General Electric Co.'s AKD-20, Siemens Type WL, having:

1. Factory assembled and tested and complying with IEEE C37.20.1, C37.20.7. All live components shall be contained in a grounded metal enclosure.
2. Indoor Enclosure Material: Steel.
3. Ratings as indicated on drawings.
4. UL label "SUITABLE FOR USE AS SERVICE EQUIPMENT".
5. Rear (and front) accessibility.
6. Sections flush at front and rear.
7. Circuit-breaker compartments shall be equipped to house drawout-type circuit breakers and shall be fitted with hinged outer doors.
8. Fully rated silver plated copper bus bars.
9. Full length copper ground bus.
10. Full capacity copper neutral bus.
11. Insulating/isolating barriers for feeder devices, so that:
    a. Bus is not exposed in feeder compartment (only exposed lugs for feeder connection).
    c. Individual devices are isolated from each other (horizontal insulating barriers).
    d. Vertical sections are isolated (vertical barriers).
12. Circuit breaker and rear cable terminal compartment nominal depth shall be a minimum of 84 inches. This dimension includes additional space for training, bending, and terminating cables. The cable bending space shall meet or exceed the requirements of the National Electrical Code.
13. Sections that are designated "space" or "provision for future breaker" equipped with all accessories required to accept a future circuit breaker.
14. Auxiliary Compartments: Match and align with basic switchgear assembly. Include the following:
    a. Busbar transition sections as required to accommodate the layout shown on the Drawings.
    b. Hinged front panels for access to metering, accessory, and blank compartments.

15. Bus bars connect between vertical sections and between compartments. Cable connections are not permitted. Busbars shall be fully isolated from the circuit breaker instrument and auxiliary compartments.
17. Circuit-Breaker Load Terminals: Silver-plated copper bus extensions equipped with bolted connectors for incoming and outgoing circuit conductors. Provide cable boots for each load terminal.
18. Busbars shall be insulated with non-hygroscopic fire-resistant insulating sleeves. Insulating tape shall not be used.
19. The vertical bus shall be held rigid in a support structure of non-hygroscopic and flame retardant molded glass reinforced polyester.
20. Vertical and horizontal busbars shall be isolated from the cable compartment by steel barriers. No live busbars shall be accessible from the rear cable compartments except the circuit breaker load side terminations.
21. Where a sectionalizing (tie) circuit breaker is present, the busbars on the two sides of that circuit breaker shall be isolated from each other. Where an incoming line or main circuit breaker is present, the incoming line conductors shall be isolated from the switchgear main busbars.
22. Circuit Breakers:
    a. Mounting: Stationary, individually mounted.
    b. Style: Molded case, or power circuit breakers, as required to accommodate the circuit breaker components.
    c. Trip Device: Programmable solid state.
    d. Interrupting Capacity: Equal to, or greater than, the short circuit rating required for the switchgear.
    e. Component Description: See switchgear schedule for specific components required for each circuit breaker. In addition to the specific components, equip each circuit breaker with additional components as required to achieve a coordinated selective scheme between the main device and the feeder devices.
    f. Zone Selective Interlocking: Zone selective interlocking shall be provided for all switchgears rated 1600A or higher.

2.02 COMPONENTS

A. Instrument Transformers: Comply with IEEE C57.13.
   1. Potential Transformers: Secondary-voltage rating of 120 V and NEMA accuracy class of 0.3 with burdens of W, X, and Y shall be provided on the bus side of the main breaker.
   2. Metering Current Transformers: Ratios as required for the application, burden, and accuracy class suitable for connected meters and instruments.
   3. Protection Current Transformers: Integral to circuit breaker rating plug assembly. Rating plugs shall be removable for increasing/decreasing trip unit rating without removing or replacing the trip unit itself.

B. Control Power Supply: 120VAC for closing, tripping, metering, and switching controls.
   1. Two dry-type transformers in separate compartments; each transformer connected to line side of associated main circuit breaker.
   2. Control Power Fuses: Primary and secondary fuses with current-limiting and overload protection.

C. Control Wiring: Factory installed type SIS rated 600 volt, 90 degrees C, furnished with wire markers at each termination except where installation environments (temperature and chemical) require specialized insulation systems. Wires shall terminate on terminal blocks with marker strips numbered in agreement with detailed connection diagrams complete with bundling, lacing, and protection. Complying with the following:

1. Flexible stranded conductors for No. 12 AWG and larger.
2. Minimum size of #14 AWG for 120VAC circuits.
3. All current transformer circuits shall be #10 AWG and wired through shorting type terminal blocks.
4. Each control wire shall be uniquely numbered at each end and at each termination point.
5. No more than two wires shall be connected at a single wiring terminal. Thread on wire nuts or split bolt connectors are not permitted. In-line control wire splices are not acceptable.
6. Terminal block shall be provided for all conductors requiring connection to circuits external to the specified equipment, where internal circuits cross shipping splits, and where equipment part replacement and maintenance will be facilitated.

g. Leave slack in bundled conductors at hinges and interconnections between shipping units. Wiring traversing hinges or other forms of flexible constructions shall be high stranded and shall traverse the area of bending normal to the plane of rotation so as to impart a twisting rather than a bending motion to the cable or wire bundle.

D. Circuit Breaker Cubicles: Each power circuit-breaker shall be mounted in an individual compartment with the following features:

1. Each compartment shall have grounded metal barriers at the top, bottom, front, and sides with flame retardant, track-resistant glass-reinforced polyester barrier at the rear.
2. Each compartment shall be dead-front. Shutters shall close automatically as a breaker is racked out of the “connected” position. Control contacts shall be “made” when the breaker is in the “test” or “connected” position.
3. Each compartment shall be equipped with drawout rails, stationary circuit breaker contacts, mechanical interlocks, and control and indicating devices as shown on the Drawings and specified herein.
4. A guide rail system shall be used to ensure accurate alignment of the breaker primary and secondary disconnects during drawout operation.
5. The drawout mechanism shall retain the removable element in the connected position and shall overcome the mechanical resistance of making and breaking the contacts of the self-coupling primary and secondary disconnects.
6. Positive mechanical interlocks shall prevent the circuit breaker from being racked in or out unless the circuit breaker is open, and shall prevent the circuit breaker from being closed while it is being racked in or out. The circuit breaker shall not be permitted to close except in the “connected” and “test” positions.
7. The drawout mechanism shall provide for four distinct positions of the circuit breaker: “connected”, “test”, “disconnected”, and “withdrawn”. The circuit breaker shall be capable of being withdrawn from the “connected” position to the “withdrawn” position without opening the

cubicle door. An indicator shall be provided on the front of the circuit breaker to show the position of the circuit breaker.

8. Each circuit breaker cubicle shall contain a positive rejection mechanism so that only the circuit breaker frame for which the cubicle was designed can be inserted.
9. Anti-pumping mechanism shall be provided.
10. Compartment doors shall have padlocking hasps.
11. Circuit breakers shall be capable of being padlocked in the drawn-out position.
12. Main, Tie, and Feeder Circuit Breaker Compartments: Shutters shall be supplied to cover circuit breaker primary line and load disconnects when the circuit breaker carriage is removed from its compartment.

E. Circuit Breakers

1. Circuit breakers shall be individually mounted, drawout, 600 volt (nominal) power circuit breakers in compliance with ANSI C37.13, C37.16, C37.17, C37.50, NRTL-listed and labeled to UL-1066. Circuit breakers shall have the following features:
   a. Circuit breakers shall be three-pole as shown on the Drawings.
   b. Circuit breakers shall have electric motor-driven spring charging, with optional manual charging and features and accessories described below.
   c. Circuit breakers shall be equipped with a circuit breaker control switch and ET-16 LED indicating lights.
   d. Circuit breakers shall be equipped with removable arcing contacts and operation counters.
   e. Circuit breakers shall have a maximum voltage rating of 635 volts 60 Hz, and shall carry 100% of the circuit breaker frame current rating of the circuit breaker continuously in a 40 deg C ambient.
   f. Circuit breakers shall be metal enclosed frame construction. The interrupting mechanism shall contain arc chutes constructed to suppress arcs and cool vented gases. Inter-phase barriers of insulating material shall be provided to isolate each pole of the circuit breaker.
   g. Each circuit breaker shall have true 30 cycle withstand capability equal to its short time interrupting rating. The circuit breaker shall not use a hidden instantaneous or making-current release to achieve its short time withstand rating.
   h. Circuit breakers shall contain a true two-step, stored energy mechanism providing quick-make, quick-break operation capable of charging-after-close operation. It shall be possible to discharge the closing springs without closing the main contacts. Maximum closing time shall be 5 cycles at nominal control voltage.
   i. Each circuit breaker shall include a flush-mounted, retractable charging handle and trip/close pushbuttons, and a non-resettable mechanical operations counter.
   j. The manual spring charging handle shall be able to complete charging of an electrically operated circuit breaker in the event control power is lost during the electric motor-driven spring charging operation.

k. The tie breaker shall be identical to the main breakers and shall be capable of being exchanged with either main breaker.

2. Control voltage for circuit breaker electrical spring charging mechanism shall be 120 VAC.
   a. Manual spring charging operators and close and trip pushbuttons shall be accessible from the front of the circuit breaker when it is installed in a cubicle, with the cubicle door closed.
   b. The following circuit breaker operating status mechanical indicators at the front door of each circuit breaker compartment:
      1) Closing spring status (charged/discharged).
      2) Circuit breaker main contact status (open/closed).
      3) Circuit breaker drawout position (connect/test/disconnect).
3. Standard padlocking provisions, on the front of the circuit breaker, to lock the circuit breaker open and mechanically trip-free. The padlock provision shall accept up to three padlocks with 1/4 to 3/8 inch diameter shank.
4. Each circuit breaker shall have provisions for multiple, secondary disconnect points. All circuit breaker control circuits, as well as inputs and outputs for the trip unit shall be wired through the secondary disconnects. Secondary disconnect points shall be self-aligning and automatically couple with mating points in the circuit breaker cubicle when the circuit breaker is in the “test” or “connect” position.
5. Provide circuit breaker mechanism operated contacts (MOC) and truck operated contacts (TOC) as required for implementation of the specified control logic.
6. Circuit breakers shall utilize a rejection system that will only allow circuit breakers of the correct ampere rating to be installed in the cubicle. A circuit breaker with a higher short circuit interrupting rating shall be allowed to be mounted in the cubicle provided it has the same frame rating.
7. Circuit breakers shall be equipped with a guide bar that will ensure alignment of the primary and secondary disconnects as the circuit breaker is being racked into “test” and “connect” positions.
8. Circuit breakers shall be equipped with wheels that allow the circuit breaker to be rolled into the cubicle once it is installed on the drawout rails.
9. Mechanical interlocks shall be provided to prevent moving the circuit breaker from the connect, test, or disconnect position unless the circuit breaker main contacts are open. The circuit breaker shall be prevented from being closed during any racking operation and shall remain trip-free except when it is in the test or connect positions.
10. A mechanical interlock shall discharge any energy stored in the closing springs before the circuit breaker can be withdrawn from its cubicle.
11. A test position shall be provided to permit operating the circuit breaker while it is disconnected from the power circuit.
12. Trip Unit: Each circuit breaker shall be equipped with overcurrent protective trip units to open the circuit breaker for overloads and short circuits in accordance with the coordination curves in the approved coordination study furnished by the Engineer. Trip units shall consist of a solid-state, microprocessor-based trip unit, current sensors, trip

actuator, and interchangeable rating plugs. The circuit breaker trip unit shall be front mounted and shall allow full access to all trip unit information including trip status, pickup and delay settings and trip targets without opening the circuit breaker cubicle door. Trip units shall have coil clearing (52b) contacts.

a. Functions: Long-time-delay, short-time-delay, and instantaneous-trip functions, independent of each other in both action and adjustment.
b. Temperature Compensation: Ensures accuracy and calibration stability from minus 5 to plus 40 deg C.
c. Field-adjustable, time-current characteristics.
d. Current Adjustability: Dial settings and rating plugs on trip units or sensors on circuit breakers, or a combination of these methods.
e. Three bands, minimum, for long-time- and short-time-delay functions; marked "minimum," "intermediate," and "maximum."
f. Pickup Points: Five minimum, for long-time- and short-time-trip functions. Equip short-time-trip function for switchable I^2t operation.
g. Pickup Points: Five minimum, for instantaneous-trip functions.
h. Trip Indication: Labeled, battery-powered lights or mechanical targets on trip device to indicate type of fault.
i. Trip units for all feeder circuit breakers shall provide integral metering functions.
j. Undervoltage Trip Devices for breakers indicated on the drawings: Adjustable time-delay and pickup voltage.
l. The trip units shall be equipped to provide Loss of Phase or Phase Imbalance protection.
m. All Trip units shall be provided with zone selective interlocking schemes.
n. Toroidal current sensors shall be mounted on the circuit breaker frame and shall have encapsulated construction to protect against damage and moisture.
o. All trip units shall have non-volatile memory to maintain all settings, trip indications and fault data during a power outage. Batteries should not be required to maintain the memory.

F. Circuit-Breaker Removal Apparatus: Overhead-circuit-breaker lifting device, track mounted at top front of switchgear and complete with hoist and lifting yokes matching each size of drawout circuit breaker installed.

2.03 SURGE PROTECTIVE DEVICES

A. General: Where indicated on the drawings, the switchgears shall be provided with factory installed directly to bus, internal modular Surge Protective Device (SPD) equipment having:

1. ANSI/UL 1449 3rd Edition compliant – Listed Category C, Type 2 with protected modes for 3 phase, 4 wire Wye configured system: L-G, L-N, L-L and N-G.
2. Rating (ANSI / IEEE C62.41 location Category C): The minimum surge current capacity the device is capable of withstanding shall be 250 kA per phase, 125 kA per mode minimum.

2.04 MICROPROCESSOR BASED MULTIFUNCTION POWER AND ENERGY METERS

A. Where indicated on the drawings, provide a factory installed Panel Mounted Power and Energy Meter on switchgears with main bus bars rated 2500 amperes or above with the following parameters:

1. Same manufacturer as the switchgear.
2. Single piece design: Transducer with graphic display module.
3. 120 VAC control power.
4. True RMS voltage and current measurement.
5. Metered parameters:
   a. Instantaneous, average, minimum, and maximum: Phase current, neutral current, ground current, line voltage, phase voltage, frequency, power factor per phase and three phase total, real power per phase and total, reactive power per phase and total, apparent power per phase and total.
   b. Real energy per phase and total, reactive energy per phase and total, apparent energy per phase and total.
   c. Phasors.
   d. User configured sliding window for real, reactive and apparent power peak demand with date and time stamp.
   e. Phase voltage percent total harmonic distortion.
   f. Phase current percent total harmonic distortion.
6. Accuracy:
   a. Energy, and demand power: 0.2% in accordance with ANSI C12.20.
7. Instrument current transformers shall be factory wired to shorting blocks or other approved method to prevent open-circuiting the current transformers. The meter shall also be user programmable for current to any CT ratio.
8. Capable of metering up to 600 volts without external potential transformers. The meter shall also be user programmable for voltage range to any PT ratio.
9. Embedded web server that includes real time circuit information in both numeric and graphical visual formats.
10. Communications: Ethernet TCP/IP, 10/100 Base T, RJ-45 connection.
11. The meter shall have a real-time clock with the added capability to synchronize with a network time server to maintain time accuracy.
12. Out of limit event triggers and logging.
13. Sampling Rate: The meter shall provide sampling at a minimum of 512 samples per cycle per channel.
14. The embedded web server shall provide a graphic plot of specific events against an ITIC curve.
15. Sag, swell and waveform recording: Recorded at 512 samples per cycle, contain pre and post event data, and shall include the ability to zoom and to scroll horizontally. The meter shall store waveform data on the meter ftp server in COMTRADE format and be accessible via a web browser.

16. Historical Trending: Historical trend logging for graphical viewing from an embedded WEB server and the graphic display module. The graphical views of historical data shall support both pan and zoom functions.
17. Memory: 10 MB minimum.
18. The meter shall have I/O expandability provisions through an optional card slot on the back.

B. Where indicated on the drawings, provide a factory installed Panel Mounted Power and Energy Meter on switchgears with main bus bars rated below 2500 amperes with the following parameters:
1. Same manufacturer as the switchgear. 120 VAC control power.
2. LCD or LED display.
3. True RMS voltage and current measurement.
4. Metered parameters:
   a. Instantaneous, minimum, and maximum: Phase current, neutral current, line voltage, phase voltage, frequency, power factor per phase and three phase total, real power per phase and total, reactive power per phase and total, apparent power per phase and total.
   b. Total real energy, reactive energy, apparent energy.
   c. User configured sliding window for real, reactive and apparent power peak demand with date and time stamp.
   d. Phase voltage percent total harmonic distortion.
   e. Phase current percent total harmonic distortion.
5. Accuracy:
   a. Energy, and demand power: 0.2% in accordance with ANSI C12.20.
6. Instrument current transformers shall be factory wired to shorting blocks or other approved method to prevent open-circuiting the current transformers under energized conditions. The meter shall also be user programmable for current to any CT ratio.
7. Capable of metering up to 600 volts without external potential transformers. The meter shall also be user programmable for voltage range to any PT ratio.
8. Embedded web server that includes real time circuit information in both numeric and graphical visual formats.
9. Communications: Ethernet TCP/IP, 10/100 Base T, RJ-45 connection.
10. The meter shall have a real-time clock with the added capability to synchronize with a network time server to maintain time accuracy.
11. Out of limit event triggers and logging.
12. Historical Trending: Historical trend logging for graphical viewing from an embedded WEB server. The graphical views of historical data shall support both pan and zoom functions.
13. The meter shall have I/O expandability provisions through an optional card slot on the back.

2.05 480V AUTOMATIC CONTROL SYSTEM

A. Refer to the Sequence of Operations specification section for the requirements for the 480V control system.

B. All circuit breakers in the 480V Switchgear E-1 and E-2 lineups shall be capable of remote operation from a PLC based control system. The PLC control system shall be supplied and programmed by the Medium Voltage Switchgear manufacturer and who shall also be responsible for implementation and integration of the Sequence of Operation.

2.06 SOURCE QUALITY CONTROL

A. Factory Tests: Perform design and routine tests according to standards specified for components. Conduct switchgear tests according to ANSI C37.51.

B. Factory Tests: Perform the following factory-certified tests on each switchgear:
   1. The switchgear shall be completely assembled, wired, adjusted and tested at the factory.
   2. After assembly, the complete switchgear shall be tested to ensure the accuracy of the wiring and the functioning of all equipment.

PART 3 EXECUTION

3.01 INSTALLATION

A. Install switchgears in accordance with NEMA Publication No. PB2.1 "Instructions for Proper Handling, Installation, Operation and Maintenance of Deadfront Distribution Switchgears".
   1. Set and program the switchgear devices in accordance with the approved coordinated selective scheme.

B. Install foundation channels for anchoring and leveling of each switchgear.

C. Identification:
   1. Install on the front of each circuit breaker, a phenolic nameplate indicating load served by circuit breaker.
   2. Stencil on front of each switchgear with white paint in 1/2 inch lettering "SB-1, etc." corresponding to switchgear designations on the drawings, and electrical parameters (phase, wire, voltage).

3.02 CLEANING

A. The Electrical Contractor shall after completing equipment installation and before energizing, inspect unit components. Remove paint splatters and other spots, dirt, and debris. Repair damaged finish to match original finish. Vacuum interiors of secondary unit substation sections.

3.03 FIELD QUALITY CONTROL

A. Provide a factory-authorized service representative to perform the following inspections, checks, and supervision of testing:
   1. Inspect field-assembled components, equipment installation, and electrical connections for compliance with the switchgear manufacturer’s installation recommendations and requirements.
   2. Assist in testing and adjusting controls and safety devices. Replace damaged and malfunctioning controls and components.

3. Witness initial energization and supervise startup services.

B. System Acceptance Test:
1. Preparation: Notify the Director's Representative at least 3 working days prior to the test so arrangements can be made prior to the test to have a Facility Representative witness the test.
2. Testing: Engage a qualified testing and inspecting agency to perform the following field test and inspections and prepare test reports.
3. The Electrical Contractor shall prepare for and a third party testing agent shall perform the following field tests and inspections:
   a. Perform visual and mechanical inspection and electrical tests according to NETA ATS, Section 7, as it applies to all installed systems and devices. Certify compliance with the following test parameters:
      i. Load-Interrupter Switch: Section 7.5.
      ii. Transformer: Section 7.2.
      iii. Switchgear: Perform tests and inspections stated in NETA ATS, Section 7.1.
      iv. Circuit Breakers: Perform tests and inspections stated in NETA ATS, Section 7.6.
      v. Protective Relays: Perform tests and inspections stated in NETA ATS, Section 7.9.
      vi. Instrument Transformers: Perform tests and inspections stated in NETA ATS, Section 7.10.
      vii. Metering and Instrumentation: Perform tests and inspections stated in NETA ATS, Section 7.11.
      viii. Ground-Fault Systems: Perform tests and inspections stated in NETA ATS, Section 7.14.
      ix. Surge Arresters: Perform tests and inspections stated in NETA ATS, Section 7.19.
   b. After installing secondary unit substation but before primary is energized, verify that grounding system at the substation tested at the specified value or less.
   c. The Testing Agent shall set field-adjustable switches and circuit breaker trip ranges as indicated by the Engineer.
   d. The Electrical Contractor shall correct malfunctioning units on site, where possible, and the Testing Agent shall retest to demonstrate compliance; otherwise, replace with new units and retest.
   e. The Testing Agent shall prepare written report to record the following:
      i. Inspections and checks carried out on site.
      ii. Test procedures used.
      iii. Test results that comply with requirements.
      iv. Test results that do not comply with requirements and corrective action taken to achieve compliance with requirements.
      v. “As Left” settings for all protection devices.

4. Submit written report of test results signed by the Company Field Advisor and the Director's Representative. Mount a copy of the final report in a plexiglass enclosed frame assembly in a conspicuous location on the switchgear.

3.04 DEMONSTRATION AND TRAINING

A. Training shall commence only after switchgear has been completely installed, connected, tested, and is deemed fully operational.

B. Engage a factory-authorized service representative to train Director’s Representative's maintenance personnel to adjust, operate, and maintain switchgear.

1. Train Director’s Representative's maintenance personnel for a minimum of 24 hours on procedures and schedules for energizing and de-energizing, troubleshooting, servicing, and maintaining equipment and schedules. Videotape training session(s) and provide recording on dvd to Director’s Representative for use in training additional personnel.
2. Review data in maintenance manuals.
3. Schedule training with Director’s Representative, through Engineer, with at least 15 days advance notice.

END OF SECTION

SECTION 271524

OPTICAL FIBER CABLES

PART 1 GENERAL

1.01 DEFINITIONS

Note: For this Section, the definition below supersedes the definition in Section 014200 for Company Field Advisor.

A. Company Field Advisor - An individual meeting the requirements of 1 or 2 below:
   1. An employee of the company producing the optical fiber cables, who is certified in writing by the company to be technically qualified in design, installation, servicing and testing of the required products. Personnel involved solely in sales do not qualify.
   2. An individual employed by an organization, other than the company producing the optical fiber cables, certified in writing by the company producing the optical fiber cables, that the individual is technically qualified in design, installation, servicing and testing of the required products and is capable to act as company field advisor in their behalf. Personnel involved solely in sales do not qualify.

1.02 SUBMITTALS

A. Waiver of Submittals: The "Waiver of Certain Submittal Requirements" in Section 013300 does not apply to this Section.

B. Submittals Package: Submit the product data, samples, and quality control submittals specified below at the same time as a package.

C. Product Data:
   1. Catalog sheets, specifications and installation instructions for all products.
   2. Complete manufacturer's construction details and specifications for the cables. Include for each type of cable:
      a. Physical and optical characteristics of the optical fibers.
         1) Cable manufacturer's certified test data (attenuation, bandwidth).
      b. Physical characteristics of strength members, and jackets.
      c. Maximum pulling strain allowed.
      d. Crush resistance.
      e. Overall dimension of cable.
   3. Splicing and termination data, including the following:
      a. List of materials.
      b. Method of connecting cables.
      c. Details of cable preparation.
      d. Method of applying materials, including quantities.

e. Precautionary measures.
f. Drawings showing method of splicing complete with dimensions.
g. Written statement from cable manufacturer that splices and terminations submitted are acceptable for use with their cable.
h. Written statement from splicing/termination manufacturer that the connectors submitted are suitable for the proposed application.
i. Written statement from cable manufacturer that the cable breakout and splitter kits submitted are acceptable for use with their cable.

4. Statement from the Company producing the optical fiber transmitter and receiver system for which the optical fiber cables are proposed to be used, indicating that the optical characteristics meet the requirements of the Company.
5. Written statement from cable manufacturer indicating recommended pulling compounds.

D. Samples:
1. Two foot sample of each type cable proposed for use.
2. One sample of each connector proposed for use.
3. One sample of each breakout and splitter kit proposed for use.

E. Quality Control Submittals:
1. Cable Installer's Qualifications Data:
a. Name of each person who will be performing the Work and their employer's name, business address and telephone number.
b. Name and addresses of the required number of similar projects worked on which meet the experience criteria.
2. Company Field Advisor Qualifications Data:
a. Name, business address and telephone number of Company Field Advisor secured for the required services.
b. Certified statement from the Company listing the qualifications of the Company Field Advisor.
c. Services and each product for which authorization is given by the Company, listed specifically for this project.
3. Cable Splicer's Qualifications Data:
a. Name of each person who will be performing the Work and their employer's name, business address and telephone number.
b. All information required showing that the experience criteria have been met.

F. Contract Closeout Submittals:
1. Post installation test report.

1.03 QUALITY ASSURANCE

A. Equipment Qualifications For Products Other Than Those Specified:
1. At the time of submission provide written notice to the Director of the intent to propose an "or equal" for products other than those specified.

Make the “or equal” submission in a timely manner to allow the Director sufficient time to review the proposed product, perform inspections and witness test demonstrations.

2. If products other than those specified are proposed for use furnish the name, address, and telephone numbers of at least 5 comparable installations that can prove the proposed products have performed satisfactorily for 3 years. Certify in writing that the owners of the 5 comparable installations will allow inspection of their installation by the Director's Representative and the Company Field Advisor.
    a. Make arrangements with the owners of 2 installations (selected by the Director) for inspection of the installations by the Director's Representative. Also obtain the services of the Company Field Advisor for the proposed products to be present. Notify the Director a minimum of 3 weeks prior to the availability of the installations for the inspection, and provide at least one alternative date for each inspection.
    b. Only references from the actual owner or owner’s representative (Security Supervisor, Maintenance Supervisor, etc.) will be accepted. References from dealers, system installers or others, who are not the actual owners of the proposed products, are not acceptable.
        1) Verify the accuracy of all references submitted prior to submission and certify in writing that the accuracy of the information has been confirmed.
3. The product manufacturer shall have test facilities available that can demonstrate that the proposed products meet the contract requirements.
    a. Make arrangements with the test facility for the Director's Representative to witness test demonstrations. Also obtain the services of the Company Field Advisor for the proposed product to be present at the test facility. Notify the Director a minimum of 3 weeks prior to the availability of the test facility, and provide at least one alternative date for the testing.
4. Provide written certification from the manufacturer that the proposed products are compatible for use with all other equipment proposed for use for this system and meet all contract requirements.

B. Cable Installer’s Qualifications: The persons installing the Work of this Section and their Supervisor shall be personally experienced in optical fiber cable systems and shall have been engaged in the installation of optical fiber cable systems for a minimum of 3 years.
    1. Furnish to the Director the names and addresses of 5 similar projects that the foregoing people have worked on during the past 3 years.

D. Cable Splicers’ Qualifications: The persons installing the optical fiber splices and/or terminations, and their Supervisor, shall be personally experienced in splicing and terminating optical fiber cable systems and shall have been engaged in the installation of optical fiber cable systems for a minimum of 3 years.
    1. Experience should be in the same types of splices and terminations proposed for this project and each project listed should be of similar size, as this project requires.

2. Furnish to the Director the following information on 5 similar projects that the foregoing people have worked on during the past 3 years.
   a. Qualifications Data should include:
      1) Names and addresses of the similar projects.
      2) Types of splices and terminations performed on the similar projects.
      3) Number of each type of splices and terminations for each of the listed projects.

1.04 DELIVERY, STORAGE AND HANDLING

A. Cable Delivery:
   1. No cable over one year old when delivered to the site will be accepted.
   2. Keep ends of cables sealed at all times, except when making splices or terminations. Use methods approved by cable manufacturer.
   3. Include the following data durably marked on each reel:
      a. Reel number.
      b. Facility name and address.
      c. Contractor's name.
      d. Project title and number.
      e. Date of manufacture.
      f. Manufacturer's name.
      g. Linear feet.
      h. Location where cable is to be installed (i.e., Between manholes No. _____ and _____).
   4. Include the following factory test data for each cable, showing the following:
      a. The reel number that the cable is on.
      b. The cable manufacturer's specified optical parameters for the type of fiber installed in the cable.
      c. Test readings for all fibers in the cable, showing that all fibers have been tested and that each fiber meets or exceeds the cable manufacturer's specified optical parameters for that fiber type.

B. Cable Storage: Store cable at temperature recommended by cable manufacturer for optimum workability.

PART 2 PRODUCTS

2.01 NONCONDUCTIVE OPTICAL FIBER CABLES - 50 MICRON/125 MICRON (CORE/CLAD)

A. Provide products from one of the following manufacturers:
   1. AMP Netconnect
   2. Belden
   3. Berk-Tek Leviton
   4. ComScope, Inc
   5. Corning Cable Systems
   6. General Cable

B. General: 50/125 Micrometer, Multimode,12 fiber, nonconductive, tight buffer, fiber optic cable (OM2)
   1. Maximum Attenuation: 3.5 dB/km at 850nm; 1.5 dB/km at 1300nm.
   2. Minimum overfilled Modal Bandwith-length Product: 500 MHz-km at 850nm; 500 MHz-km at 1300nm.
   3. Jacket:
      a. Jacket Color: Orange
      b. Cable cordage jacket, fiber, unit, and group color shall be according to TIA-598-D.
      c. Imprinted with fiber count, fiber type, and aggregate length at regular intervals not to exceed 40 inches (1000 mm).
   4. Comply with ICEA S-87-640 for mechanical properties.
   5. Comply with TIA-568-B.3 for performance specifications.
   6. Comply with TIA-492AAAB for detailed specifications.
   7. Listed and labeled by an NRTL acceptable to authorities having jurisdiction as complying with UL 444, UL 1651, and NFPA 70 for the following types:
      a. General Purpose, Nonconductive: Type OFN, or Type OFNG in metallic conduit.
   8. Cables shall be rated for outdoor installations and submersion in water.

2.02 OPTICAL FIBER PATCH PANELS

A. Optical fiber patch panels shall be 12-port wall mount, NEMA 12 enclosures.

B. Each enclosure shall contain ‘SC’ style Connector Panels rated in performance and colored for the optical fiber types specified herein, Blank Panels, cable routing, and labeling accessory kits.

C. Panels shall be constructed of rugged 16 gauge heavy steel.

D. Panels shall be black in color.

2.03 CONNECTORS AND SPLICING

A. Cable Connecting Hardware:
   1. Comply with Optical Fiber Connector Intermateability Standards (FOCIS) specifications of TIA-604-2-B for Type ST connectors, TIA-604-3-B for Type SC connectors, TIA-604-10-B for Type LC connectors, TIA/EIA-604-12 for Type MT-RJ connectors, and TIA-604-5-D for Type MPO connectors. Comply with TIA-568-C.3.

   2. Anaerobic ‘SC’ style connector for single mode with zirconia ceramic ferrule and bend limiting strain relief.

B. Splicing: All fiber optic splices shall be via fusion splicing.

2.04 UTP CABLE

A. Provide products from one of the following manufacturers:

1. 3M
2. AMP Netconnect
3. Belden
4. Berk-Tek Leviton
5. ComScope, Inc

B. Description: 100-ohm, four-pair UTP, formed into 25-pair, binder groups covered with a blue thermoplastic jacket.
   1. Comply with ICEA S-90-661 for mechanical properties.
   2. Comply with TIA/EIA-568-B.1 for performance specifications.
   3. Comply with TIA/EIA-568-B.2, Category 6A
   4. Listed and labeled by an NRTL acceptable to authorities having jurisdiction as complying with UL 444 and NFPA 70 for the following types:
      a. Communications, General Purpose: Type CM or CMG.

2.05 UTP CABLE HARDWARE

A. Provide products from the same manufacturer as UTP cable.

B. General Requirements for Cable Connecting Hardware: Comply with TIA/EIA-568-B.2, IDC type, with modules designed for punch-down caps or tools. Cables shall be terminated with connecting hardware of same category or higher.

C. Connecting Blocks: 110-style IDC for Category 6. Provide blocks for the number of cables terminated on the block plus 25 percent spare. Integral with connector bodies, including plugs and jacks where needed.

D. Patch Panel: Modular panels housing multiple-numbered jack units with IDC-type connectors at each jack for permanent termination of pair groups of installed cables.

E. Patch Panel: Modular panels housing multiple-numbered jack units with IDC-type connectors at each jack for permanent termination of pair groups of installed cables.

2.06 ACCESSORIES

A. Pulling Compounds: As recommended by cable manufacturer.

B. Tags: Precision engrave letters and numbers with uniform margins, character size minimum 3/16 inches high.
   1. Phenolic: Two color laminated engraver’s stock, 1/16 inch minimum thickness, machine engraved to expose white inner core color.
   2. Aluminum: Standard aluminum alloy plate stock, minimum .032 inches thick, engraved areas enamel filled or background enameled with natural aluminum engraved characters.

C. Markers:

1. Premarked self-adhesive: W.H. Brady Co.'s B940, Thomas and Betts Co.'s E-Z code WSL self-laminating, Ideal Industries' Mylar/Cloth wire markers, or Markwick Corp.'s permanent wire markers.
2. Flexible sleeve markers: Plastic Extruded Parts Inc.'s FS series.
3. Snap-on markers: Plastic Extruded Parts Inc.'s RS series.

PART 3 EXECUTION

3.01 PREPARATION

A. Prior to installing cable, test the cable on the reels to verify that the cable's fibers are intact.
   1. At the contract site, perform a continuity test on each fiber in each cable to confirm light passes through each fiber.
   2. Remove defective cable from the Site.
   3. Identify the existing fiber optic cable and verify type prior to interruption to service.

3.02 INSTALLATION

A. Installing Cables:
   1. Install cables in conduit after conduit system is completed.
   2. Keep ends of cables sealed watertight at all times, except when making splices or terminations.
   3. No grease, oil, lubricant other than approved pulling compound may be used to facilitate the pulling-in of cables.
   4. Use pulling attachment connected to the cable strength member for pulling in cables. Seal the pulling attachment watertight.
   5. Incorporate into the pull line at the pulling attachment a tension-control swivel containing a shear pin designed to fail if the pre-determined maximum cable strain is applied.
   6. Pull cables with a dynamometer or strain gage incorporated into the pulling equipment. Do not pull cables unless the Director's Representative is present to observe readings on the dynamometer or strain gage during the time of actual pulling. Do not exceed cable manufacturer's recommended pulling strain.
   7. Provide 2 meters of slack in each cable, at the first and last manhole that the cable is running through.
   8. Provide 1 to 2 meters of slack in each cable, in the enclosures that the cable terminates or is spliced.

B. Splices and Terminations:
   1. Splice, where allowed, and terminate cable in accordance with manufacturer's approved installation instructions.
   2. No splicing of optical fiber cables will be allowed except:
      a. Fusion splicing.

C. Identification of Optical Fiber Cables: Identify cables in manholes, pullboxes and in equipment to which they connect:

1. Install tags on each cable indicating cable number, month and year installed, type of cable, and manufacturer. Attach tags to cables with non-ferrous metal wire or brass chain.
2. Use markers to identify each optical fiber in equipment to which they connect.

3.03 FIELD QUALITY CONTROL

A. Post Installation Test:

1. Perform test on each active and spare optical fiber after cable has been installed complete with connectors, and prior to placing cable into service.
   a. Demonstrate that the amount of attenuation and connector losses through the fiber is no greater than 75 percent of the parameters allowed by the optical fiber transmitter/receiver manufacturer for wavelengths of 850nm and 1300nm.
      1) Example: If the optical fiber transmitter/receiver manufacturer allows a 12db loss between the transmitter and receiver. The amount of loss that would be allowed across the fiber should not be more than 8db.
      2) If the amount of attenuation measured across a fiber is above 75 percent, then that fiber is to be tested to determine the cause of the high measurement, faulty connector, damaged fiber, etc., and corrective actions are to be made to correct the problem
2. Perform test in the presence of the Director's Representative.
3. Supply equipment necessary for performing test.
4. Submit written report of test results signed by Company Field Advisor and Director's Representative. Mount a copy of the final report in a plexiglass enclosed frame assembly adjacent to the security console.

END OF SECTION

SECTION 283101

PROTECTED PREMISES FIRE ALARM SYSTEM

PART 1 GENERAL

1.01 REFERENCES

A. Underwriters Laboratories Inc.

B. National Fire Protection Association Standard 72.

1.02 DEFINITIONS

A. Initiating Device Circuit: A circuit to which automatic or manual initiating devices are connected where the signal received does not identify the individual device operated. Example:
   1. Circuits from FACP to non-addressable signal initiating devices.

B. Notification Appliance Circuit: A circuit or path directly connected to a notification appliance. Example:
   1. Circuits from FACP to notification appliances.

C. Signaling Line Circuit: A circuit or path between any combination of circuit interfaces, control units, or transmitters over which multiple system input signals or output signals, or both are carried. Examples:
   1. Circuits from FACP to addressable devices.

D. Operating Mode:
   1. Public Mode: Audible and visible signaling to occupants or inhabitants of the area protected by the fire alarm system.

1.03 SYSTEM DESCRIPTION

A. The first alarm detection and notification system in the Switchgear House shall interface with the existing Simplex Fire Alarm Control Panel located in the Duryea Office Building Security Office. The new system shall consist of only notification and detection devices that are loop powered from the existing FACP.

1.04 SUBMITTALS

A. Waiver of Submittals: The “Waiver of Certain Submittal Requirements” in Section 013300 does not apply to this Section.

B. Preliminary Submittal: Existing system test report.

C. Submittals Package: Submit the shop drawings, product data, and quality control submittals specified below at the same time as a package.

1. Company Field Advisor Letter: With the submittals package include a letter from the Company Field Advisor stating that he/she has reviewed the Submittals Package for accuracy and completeness, and approves all materials and installation methods included in the Submittals Package.

D. Shop Drawings:
1. Composite wiring and/or schematic diagrams of the complete system as proposed to be installed (standard diagrams will not be acceptable).
   a. Indicate circuits which are power-limited if power-limited wiring is proposed for use.
   b. For 2-hour fire rated cable assemblies show proposed routes and installation details (include UL classification data, listing and system number).
   c. Include transient surge and lightning protection grounding details for signaling line circuits, initiating device circuits, and ac power conductors entering and leaving each fire alarm control panel.
2. Interconnection details between new system and existing sub-systems.

E. Product Data:
1. Catalog sheets, specifications and installation instructions.
2. Bill of materials.
3. Detailed description of system operation.
4. Sample procedure, programming and print-out for alarm, acknowledgment, and system reset.
5. Total electrical load of the complete system in supervisory and alarm conditions.
   a. Include for each system component that utilizes batteries the battery ampere-hour capacity recommended for each component by the Company producing the system, for the specified duration.
6. Statement from the Company producing the system, for each size and type of single conductor and multiconductor cable proposed for use, indicating that the electrical characteristics meet the requirements of the Company.
7. Data from the Company furnishing the products, proving that detection devices that receive their power from the initiating device circuit or a signaling line circuit of a fire alarm control unit are UL listed for use with the control unit.
   a. Submit copy of the control unit “Installation Manual Wiring Diagrams” that were a part of the UL “UOJZ” approval process showing that the proposed products, circuits, and wiring diagrams are UL listed “Control Units System (UOJZ)” for use with the control panel.
   b. Submit data proving that the software and firmware is listed for use with the control panel.
   c. Submit data proving that the initiating devices are listed for the intended application. Also for specific applications, such as:

d. Submit data proving that relays and appliances connected to the fire alarm system, which are used to initiate control of fire safety functions, are listed for the purpose.

e. Submit data proving that the method(s) of monitoring the connection between the fire alarm system and controlled electrical and mechanical systems for integrity are listed for the purpose.

8. Detailed description of procedure proposed to test individual initiating devices.

a. Include product information pertaining to the test equipment that will be used to perform the tests.

b. Include certified statement that the proposed test method meets the test requirements of NFPA 72 and UL 268 (cite reference to the applicable NFPA and UL paragraphs).

9. Name, address and telephone number of nearest fully equipped service organization.

a. Include list of service technicians who are NICET Level II or higher Fire Alarm Systems certified.

F. Quality Control Submittals:

1. Copy of license required by New York State General Business Law Article 6-D for installing Fire Alarm Systems.

a. Also include copy of identification card issued by the Licensee for each person who will be performing the Work.

2. Company Field Advisor Data: Include:

a. Name, business address and telephone number of Company Field Advisor secured for the required services.

b. Certified statement from the Company listing the qualifications of the Company Field Advisor.

c. Copy of NICET Letter of Approval indicating Level III or higher Fire Alarm Systems certification.

d. Services and each product for which authorization is given by the Company, listed specifically for this project.

G. Contract Closeout Submittals:

1. System acceptance test report.

2. Certificates:

a. Affidavit, signed by the Company Field Advisor and notarized, certifying that the system meets the contract requirements and is operating properly.

b. NFPA Record of Completion (NFPA 72 Figure 1-6.2.1).

3. Operation and Maintenance Data:

a. Deliver 2 copies, covering the installed products, to the Director's Representative. Include:

1) Operation and maintenance data for each product.

2) Complete point to point wiring diagrams of entire system as installed. Identify all conductors and show all terminations and splices. (Identification shall correspond to markers installed on each conductor.)

3) Name, address, and telephone number of nearest fully equipped service organization.

1.05 QUALITY ASSURANCE

A. Equipment Qualifications For Products Other Than Those Specified:

1. At the time of submission provide written notice to the Director of the intent to propose an “or equal” for products other than those specified. Make the “or equal” submission in a timely manner to allow the Director sufficient time to review the proposed product, perform inspections and witness test demonstrations.
2. If products other than those specified are proposed for use furnish the name, address, and telephone numbers of at least 5 comparable installations that can prove the proposed products have performed satisfactorily for 3 years. Certify in writing that the owners of the 5 comparable installations will allow inspection of their installation by the Director's Representative and the Company Field Advisor.
   a. Make arrangements with the owners of 2 installations (selected by the Director) for inspection of the installations by the Director's Representative. Also obtain the services of the Company Field Advisor for the proposed products to be present. Notify the Director a minimum of 3 weeks prior to the availability of the installations for the inspection, and provide at least one alternative date for each inspection.
   b. Only references from the actual owner or owner’s representative (Security Supervisor, Maintenance Supervisor, etc.) will be accepted. References from dealers, system installers or others, who are not the actual owners of the proposed products, are not acceptable.
      1) Verify the accuracy of all references submitted prior to submission and certify in writing that the accuracy of the information has been confirmed.
3. The product manufacturer shall have test facilities available that can demonstrate that the proposed products meet the contract requirements.
   a. Make arrangements with the test facility for the Director's Representative to witness test demonstrations. Also obtain the services of the Company Field Advisor for the proposed product to be present at the test facility. Notify the Director a minimum of 3 weeks prior to the availability of the test facility, and provide at least one alternative date for the testing.
4. Provide written certification from the manufacturer that the proposed products are compatible for use with all other equipment proposed for use for this system and meet all contract requirements.

B. UL Listing: The system shall be listed in the UL Fire Protection Equipment Directory under product category “Control Units System (UOJZ)”.

C. Test Facility: The Company producing the system shall have test facilities available that can demonstrate that the proposed system meets contract requirements.

D. Company Field Advisor: Company Field Advisor shall be National Institute for Certification in Engineering Technologies (NICET) certified as Level III or higher Fire Alarm Protection/Fire Alarm Systems Engineering Technician.
   1. Secure the services of a Company Field Advisor for a minimum of 40 working hours at the contract site for the following:
      a. Render advice regarding installation and final adjustment of the system.
      b. Assist in initial programming of the system.
      c. Render advice on the suitability of each signal initiating device for its particular application.
      d. Witness final system test and then certify with an affidavit that the system is installed in accordance with the contract documents and is operating properly.

E. Company Field Advisor (Existing Sub-Systems): Secure the services of a Company Field Advisor from the Company of each existing sub-system for a minimum of 8 working hours at the contract site for the following:
   1. Render advice and witness test of existing sub-systems.
   2. Render advice on the interconnection of existing sub-systems with the new system.
   3. Witness the final test of the combined new system and existing sub-systems.

1.06 MAINTENANCE

A. Service Availability: A fully equipped service organization capable of guaranteeing response time within 8 hours to service calls shall be available 24 hours a day, 7 days a week to service the completed Work.
   1. Service organization personnel shall include service technicians who are National Institute for Certification in Engineering Technologies (NICET) certified as Level II or higher Fire Alarm Protection/Fire Alarm System Engineering Technician.

PART 2 PRODUCTS

2.01 INITIATING DEVICES

A. General:
   1. Fire detection devices that receive their power from the initiating device circuit or a signaling line circuit of a fire alarm control unit shall be listed for use with the control unit.
   2. Where individually identifiable (addressable) devices are required, but not available from the Company producing the system, either:
      a. Use non-addressable devices and individually wire each device to the FACP's as separate monitor points, making each non-addressable device individually identifiable, or:
      b. Employ remote addressable network modules to make each non-addressable device individually addressable.

B. Ceiling Mounted Detecting devices (Non-Addressable, Non-Intelligent):
1. General:
   a. Heat detectors, ionization type smoke detectors, and photoelectric type smoke detectors shall have common mounting base that accommodates interchanging of the different type detectors.
2. Smoke Detectors:
   a. Photoelectric Type.
      1) With 135 degrees F Thermal Device and LED: Simplex's 2098-9202.
      2) With LED: Simplex's 2098-9201.
      3) Photoelectric type smoke detectors shall have sensitivity level of 3.2.

C. Ceiling Mounted Sensors (Intelligent, Addressable, Analog):
1. General:
   a. Heat sensors, ionization smoke sensors, and photoelectric smoke sensors shall have common mounting base that accommodates interchanging of the different type sensors.
2. Smoke Sensors:
   a. Photoelectric Type: Simplex's 4098-9714/9798.
      1) Photoelectric type smoke sensor shall have initial sensitivity level of 3.2.

I. Manual Fire Alarm Boxes:
1. Non-Addressable:
   a. Single Action Pull Type: Simplex's 2099-9754 Series.
2. Addressable:
   a. Single Action Pull Type: Simplex's 2099-9795.

2.03 NOTIFICATION APPLIANCES

A. General:
1. Provide UL 464 listed audible signal appliances:
   a. Classified "Public" or "Private Mode Only" to suit application.
   b. Marked "F. A. Service" or "F. A. Service - Private Mode Only" to suit application.
2. Provide UL listed visible signal devices:
   a. For private mode applications, UL 1638 "Fire Protective Visible Signaling Appliance".
   b. For public mode applications, UL 1971 "Signaling Devices for the Hearing Impaired".
   c. For wall mounting or ceiling mounting to suit application.

B. Combination Audible/Visible Appliances - Wall Mounted:

1. Type AV: Simplex's TrueAlert Series:
   a. Xenon flashtube strobe:
      1) AV-15: 15 candela.
      2) AV-75: 75 candela.

3) AV-110: 110 candela.

b. Clear lens having FIRE imprinted thereon in red letters, or clear lens with red base having FIRE imprinted thereon in white letters.

c. Audible alarm notification appliance as indicated on the drawing.

1) Horn.
2) Speaker.
3) Bell.
4) Chime (Electro/Mechanical).
5) Chime (Electronic).

d. Surface or flush wall mounted as indicated on the Drawings.

C. Visible Appliances - Wall Mounted:

1. Type V: Simplex's TrueAlert Series:

a. Xenon flashtube strobe:

1) V-15: 15 candela.
2) V-75: 75 candela.
3) V110: 110 candela.

b. Clear lens having FIRE imprinted thereon in red letters, or clear lens with red base having FIRE imprinted thereon in white letters.

c. Surface or flush wall mounted as indicated on the Drawings.

D. Audible Appliances - Wall Mounted:

1. Horns:

a. Type H: Simplex's TrueAlert Series:

1) Surface or flush wall mounted as indicated on the Drawings.
2) Selectable multiple tone signals.
3) Suitable for damp and wet locations.

2.04 NONPOWER-LIMITED FIRE ALARM CIRCUIT CONDUCTORS

A. All electrical characteristics shall meet the requirements of the Company producing the system (conductor to conductor capacitance, dc resistance, velocity of propagation, etc.).

B. Conductors twisted, shielded and jacketed as recommended by the Company producing the system.

C. Single Conductors:

1. No. 18 and No. 16 AWG: Insulated copper conductors suitable for 600 volts, N.E.C. types KF-2, KFF-2, PAFF, PTFF, PF, PFF, PGF, PGFF, RFH-2, RFHH-2, RFHH-3, SF-2, SFF-2, TF, TFF, TFN, TFFN, ZF, ZFF.
2. Larger Than No. 16 AWG: Insulated copper conductors suitable for 600 volts, in compliance with NFPA 70 Article 310.

3. Conductors with other types and thickness of insulation may be used if listed for nonpower-limited fire alarm circuit use.

D. Multiconductor Cables NFPA 70 Types NPLFP, NPLFR, NPLF:
   1. Conductors:
      a. Conductor Sizes No. 18 and No. 16 AWG: Insulated copper conductors rated 600 volts, NFPA 70 types KF-2, KFF-2, PAFF, PTFF, PF, PFF, PGF, PGFF, RFH-2, RFHH-2, RFHH-3, SF-2, SFF-2, TF, TFF, TFN, TFFN, ZF, ZFF.
      b. No. 14 AWG and Larger: Insulated copper conductors suitable for 600 volts, one of the types listed in NFPA 70 Table 310-13 or one that is identified for nonpower-limited fire alarm circuit use.
   2. Cable Listing and Marking: NPLFP, NPLFR, and NPLF marked to suit listings and may be marked with a maximum usage voltage rating of 150 volts.

2.05 SIGNS, LABELS, MARKERS, AND NAMEPLATES

A. Procedure Sign: Card holder with aluminum or stainless steel frame, plexiglass front and sheet aluminum card backing plate. Minimum size card 8 x 10 inches. For each procedure sign furnish l blank card in holder and 5 spare blank cards suitable for typing future procedures thereon.

B. Alarm Notification Locator: Card holder with aluminum or stainless steel frame, plexiglass front and sheet aluminum card backing plate. Minimum size card 8 x 10 inches. Type on card the switch numbers and location of notification appliances controlled by each switch.

C. Nameplates: Precision engrave letters and numbers with uniform margins, character size minimum 3/16 inch high.
   1. Phenolic: Two color laminated engraver's stock, 1/16 inch minimum thickness, machine engraved to expose inner core color (white).
   2. Aluminum: Standard aluminum alloy plate stock, minimum .032 inches thick, engraved areas enamel filled or background enameled with natural aluminum engraved characters.
   3. Materials for Outdoor Applications: As recommended by nameplate manufacturer to suit environmental conditions.

2.06 ACCESSORIES

A. Include accessories required to perform the functions summarized in SYSTEM DESCRIPTION and indicated on the drawings.

2.07 FIRE EXTINGUISHER

A. CO2 type fire extinguisher, minimum 20 pound unit by Amerex Corp., Ansul Inc., Fire-End and Croker Corp., or Walter Kidde Portable Equipment, Inc.

PART 3 EXECUTION

3.01 INTERRUPTIONS TO EXISTING SUB-SYSTEMS

A. Maintain the existing sub-systems in their present condition to the extent possible while installing new Work.

B. Prior to making changes or removals relative to the existing sub-systems, notify the Director's Representative and have procedures approved.

C. When changes or removals are required to the existing fire alarm system such that it's ability to act as a fire alarm system is impaired, provide a temporary fire alarm system so that the building is protected at all times by a functioning fire alarm system. Notify Building Supervisor (thru Director's Representative) of proposed temporary measures and scheduling. Both the proposed temporary measures and the scheduling must be approved by the Director's Representative.

D. Provide signs, instructions and alternate methods for reporting a fire.

3.02 INSTALLATION

A. Install system in accordance with the Company's printed instructions unless otherwise indicated.

B. Do not install smoke detecting devices until the Work (including cleaning) of all trades in the area has been completed. Protect installed smoke detecting devices from airborne dust and debris.

C. Mount smoke detecting devices, and seal air holes in the back of the devices (including interior of raceways and holes associated with installation of boxes and raceways) so that air flow from inside of housing or from the periphery of the housing will not prevent entry of smoke during a fire or test condition. Seal air holes with gaskets, expanding silicone foam, or other sealants as approved.

D. Wiring For Survivability:
   1. Signals from manual fire alarm boxes and other fire alarm initiating devices within a building transmitted over the same signaling line circuit shall not interfere with the manual fire alarm box signals when both types of initiating devices are operated at the same time.
   2. Failure of equipment or a fault on one or more installation wiring conductors of one notification appliance circuit shall not result in functional loss of any other notification appliance circuit.
   3. Splices in wiring in vertical risers is prohibited.
   4. Avoid splices in horizontal runs. When splices are necessary, use junction boxes. Exception: For 2-hour fire rated cable assembly, use UL listed methods to maintain 2-hour rating.
      a. Make splices with mechanical or hydraulic type pressure connectors. The use of wire nuts is prohibited.
      b. Paint cover of junction boxes fire department red.

5. Wiring Class A, Style 6, 7, D, E, or Z Signaling Line Circuits, Initiating Device Circuits and Notification Appliance Circuits: Do not install both legs of Class A, Style 6, 7, D, E, or Z circuits in same cable assembly, enclosure, or raceway back to MFACP or ICU's.
    a. Run return legs along another route to obtain maximum benefit of these alternate path circuits.

E. Identification, Labeling, Marking:

1. Nameplates:
    a. Install on each manual fire alarm box a nameplate stating: Floor number, and location (1st Fl, east, etc.).

3.03 FIELD QUALITY CONTROL

A. Preliminary System Test:
1. Preparation: Have the Company Field Advisor adjust the completed system and then operate it long enough to assure that it is performing properly.
2. Run a preliminary test for the purpose of:
    a. Determining whether the system is in a suitable condition to conduct an acceptance test.
    b. Checking and adjusting equipment.
    c. Training facility personnel.

B. System Acceptance Test:
1. Preparation: Notify the Director's Representative at least 3 working days prior to the test so arrangements can be made to have a Facility Representative witness the test.
2. Supply all equipment necessary for system adjustment and testing.
3. Make the following tests:
    a. Test the system in accordance with NFPA 72, Chapter 7.
        1) Follow test methods stated in Table 7-2.2.
        2) Record results on NFPA 72 Figure 1-6.2.1 Record of Completion.
    b. Test system operation step by step as summarized in SYSTEM DESCRIPTION.
4. Submit written report of test results signed by Company Field Advisor and the Director's Representative. Also complete an NFPA Record of Completion.
    a. Mount a copy of the written report of test results, and the NFPA 72 Record of Completion in plexiglass enclosed frame assemblies adjacent to the MFACP (one framed assembly for each report).

C. Conduct tests that are disruptive to facility personnel after normal working hours as directed.

3.04 INSULATED CONDUCTOR SCHEDULE - TYPES AND USE

A. Signaling Line Circuits, Initiating Device Circuits and Notification Appliance Circuits:
   1. Nonpower-Limited Circuits: For interior wiring (in raceways) use nonpower-limited fire alarm circuit single conductors or multiconductor cable types specified in PART 2 except where a 2-hour fire rated cable assembly is required.
      a. Number of conductors and conductor size as recommended by the Company producing the system, except that conductor size shall not be less than No. 18 AWG for signaling line circuits, not less than No. 16 AWG for initiating device circuits, and not less than No. 14 AWG for notification appliance circuits.

B. Control Circuits: Associated with the Fire Alarm System: Use Class 1, 2, and 3 wiring specified in Section 260519.

C. Primary Supply Circuits and Secondary Supply Wiring:
   1. Use electric light and power wiring specified in Section 260519.

END OF SECTION

DRAWING LEGEND		
DEMOLITION LEGEND		
SYMBOL	DESCRIPTION	NOTES
—— T ——	REMOVE EXISTING COMMUNICATION CONDUIT	1
	REMOVE EXISTING GROUND LIGHT	2
	REMOVE EXISTING 1,000 GALLON UNDERGROUND FUEL OIL STORAGE TANK (H CONTRACT)	3 (1)
	REMOVE EXISTING TREE	4
—— F ——	REMOVE EXISTING FUEL OIL PIPING (H CONTRACT)	5 (1)

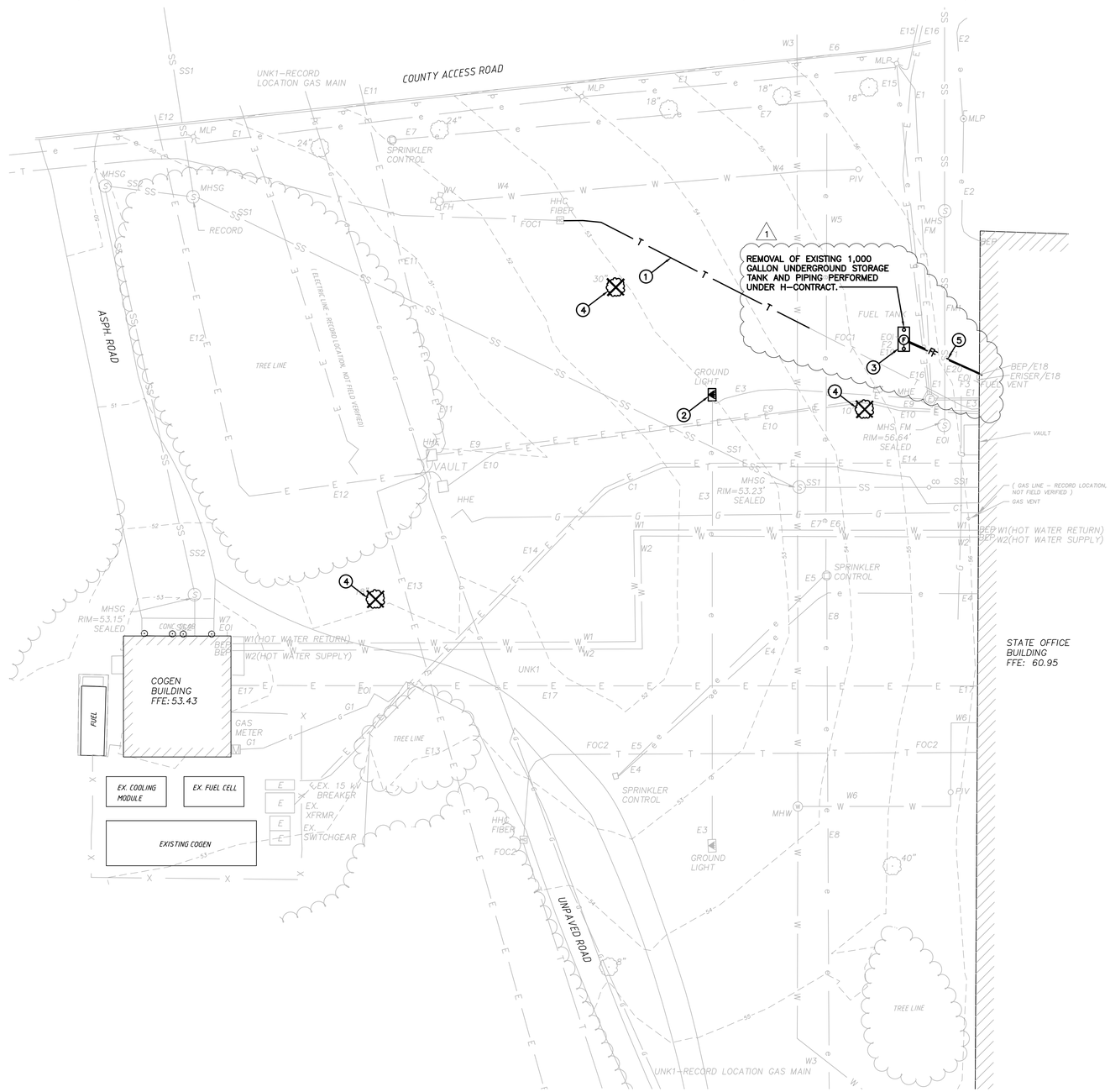

DEMOLITION PLAN

SCALE: 1" = 20-0'

GRAPHIC SCALE
20 10 0 20 40
SCALE: 1"=20'-0"
UNIT OF MEASURE: FEET

REVISED DRAWING 8-9-2016

NYS OFFICE OF GENERAL SERVICES
Serving New York
ANDREW M. CUOMO
Governor
ROANN M. DESTITO
Commissioner

CONSULTANT

RMF ENGINEERING, P.C.
5520 RESEARCH PARK DR., SUITE 300
BALTIMORE, MD 21228

WARNING:
THE ALTERATION OF THIS MATERIAL IN ANY WAY, UNLESS DONE UNDER THE DIRECTION OF A COMPARABLE PROFESSIONAL, I.E. ARCHITECT FOR AN ARCHITECT, ENGINEER FOR AN ENGINEER OR LANDSCAPE ARCHITECT FOR A LANDSCAPE ARCHITECT, IS A VIOLATION OF THE NEW YORK STATE EDUCATION LAW AND/OR REGULATIONS AND IS A CLASS "A" MISDEMEANOR.

STATE OF NEW YORK
JAMES KENYON RIGGS
No. 091491
LICENSED PROFESSIONAL ENGINEER

CONTRACT: CONSTRUCTION

TITLE: REPLACE SWITCHGEAR

LOCATION:
PERRY B. DURYEA STATE OFFICE BLDG.
250 VETERANS MEMORIAL HIGHWAY,
HAUPPAUGE, NY 11788

CLIENT:
NYS OFFICE OF GENERAL SERVICES

MARK	DATE	DESCRIPTION
1	8-24-2016	ADDENDUM NO. 3
	6-22-2016	FINAL SUBMISSION

PROJECT NUMBER:	44180-C
DESIGNED BY:	SRB
DRAWN BY:	SRB
FIELD CHECK:	SRB
APPROVED:	WAE

SHEET TITLE:
DEMOLITION PLAN

DRAWING NUMBER:
C-101

SHEET 3 OF 25

DRAWING LEGEND	
SITE PLAN LEGEND	
SYMBOL	DESCRIPTION
	SWITCHGEAR BUILDING (C CONTRACT)
—— T ——	COMMUNICATION CONDUIT
	POWER DUCTBANK
	TELECOM HANDHOLE
—— F ——	FUEL OIL PIPING (H CONTRACT)
X / CX.XX	SECTION CUT
X / CX.XX	PROFILE CALLOUT

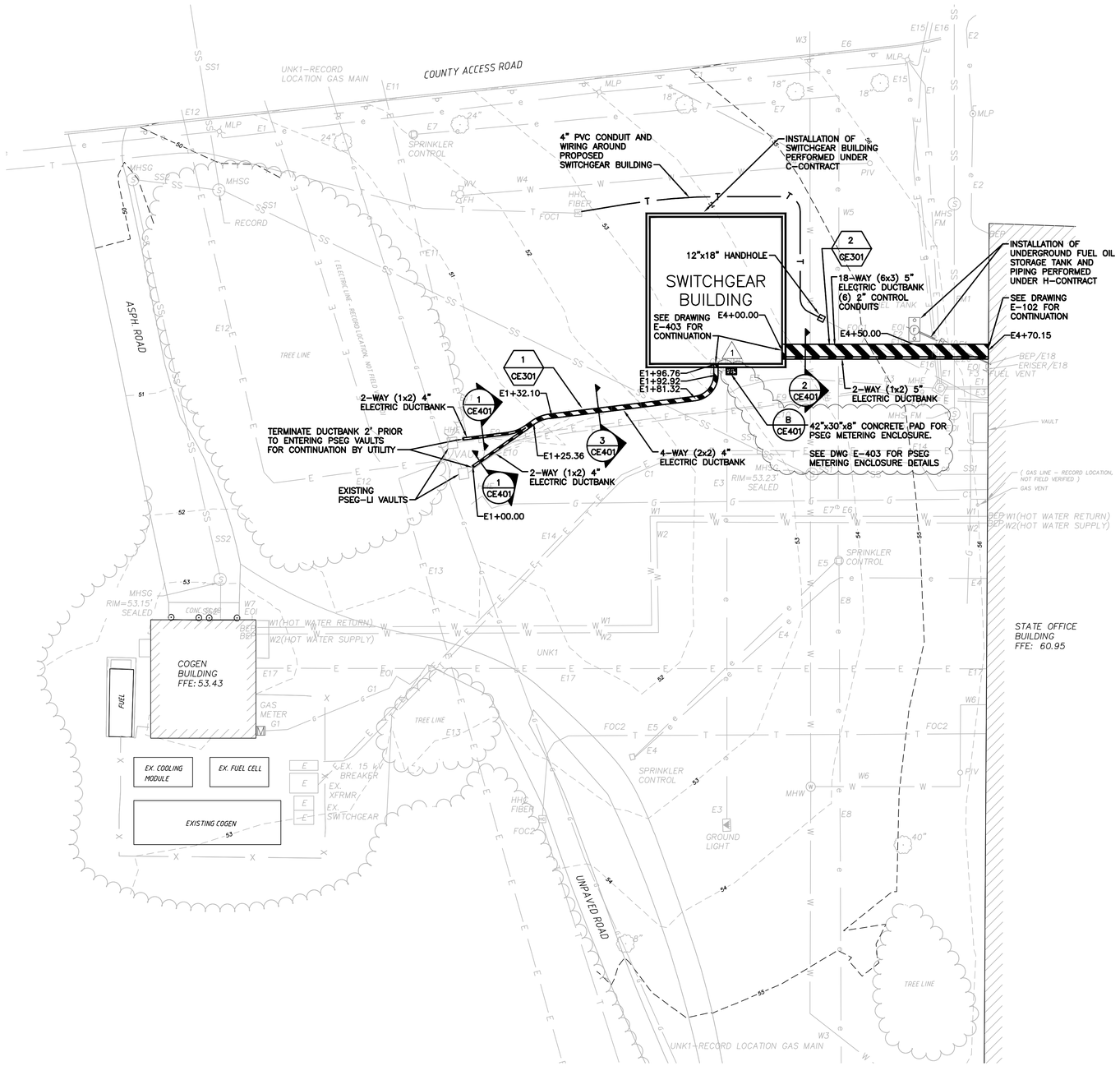

ELECTRIC SITE PLAN

SCALE: 1" = 20-0'

GRAPHIC SCALE
20 10 0 20 40
SCALE: 1"=20'-0"
UNIT OF MEASURE: FEET

REVISED DRAWING 8-9-2016

NYS OFFICE OF GENERAL SERVICES
Serving New York
ANDREW M. CUOMO
Governor
ROANN M. DESTITO
Commissioner

CONSULTANT

RMF ENGINEERING, P.C.
5520 RESEARCH PARK DR., SUITE 300
BALTIMORE, MD 21228

WARNING:
THE ALTERATION OF THIS MATERIAL IN ANY WAY, UNLESS DONE UNDER THE DIRECTION OF A COMPARABLE PROFESSIONAL, I.E. ARCHITECT FOR AN ARCHITECT, ENGINEER FOR AN ENGINEER OR LANDSCAPE ARCHITECT FOR A LANDSCAPE ARCHITECT, IS A VIOLATION OF THE NEW YORK STATE EDUCATION LAW AND/OR REGULATIONS AND IS A CLASS "A" MISDEMEANOR.

STATE OF NEW YORK · JAMES KENYON BIGGS · No. 091491 · LICENSED PROFESSIONAL ENGINEER

CONTRACT: ELECTRICAL

TITLE: REPLACE SWITCHGEAR

LOCATION: PERRY B. DURYEA STATE OFFICE BLDG. 250 VETERANS MEMORIAL HIGHWAY, HAUPPAUGE, NY 11788

CLIENT: NYS OFFICE OF GENERAL SERVICES

MARK	DATE	DESCRIPTION
1	08-24-2016	ADDENDUM NO. 3
	6-22-2016	FINAL SUBMISSION

PROJECT NUMBER:	44180-E
DESIGNED BY:	SRB
DRAWN BY:	SRB
FIELD CHECK:	SRB
APPROVED:	WAE

SHEET TITLE: ELECTRIC SITE PLAN

DRAWING NUMBER: CE-201

SHEET 03 OF 25

REVISED 8-24-16

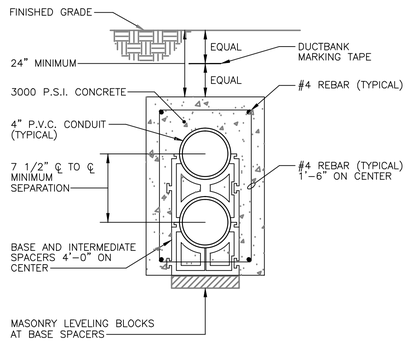

1 CE401 **2-WAY (2x1) 4" ELECTRIC DUCTBANK**
SCALE: NONE

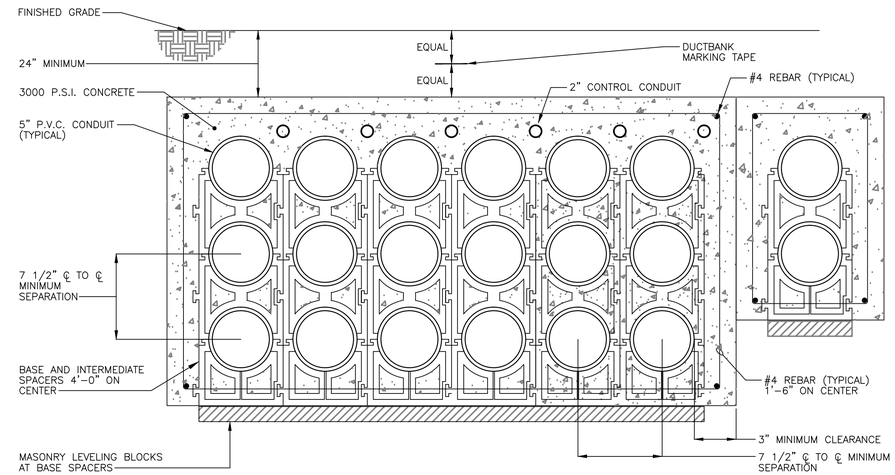

2 CE401 **18-WAY (6x3) AND 2-WAY (1x2) 5" ELECTRIC DUCTBANK**
SCALE: NONE

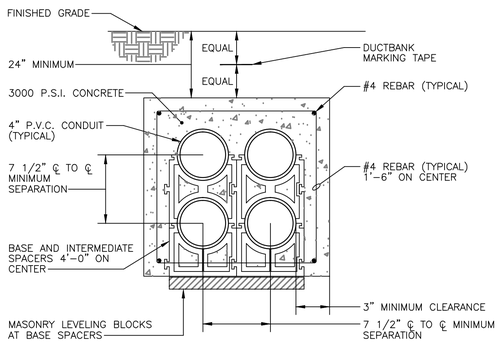

3 CE401 **4-WAY (2x2) 4" ELECTRIC DUCTBANK**
SCALE: NONE

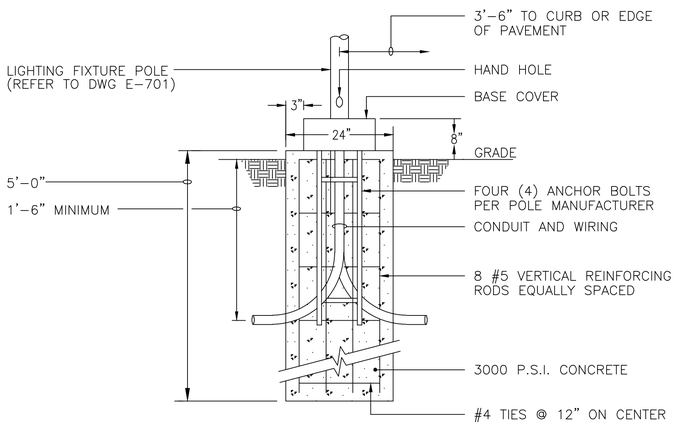

A CE401 **LIGHT POLE BASE**
SCALE: NONE

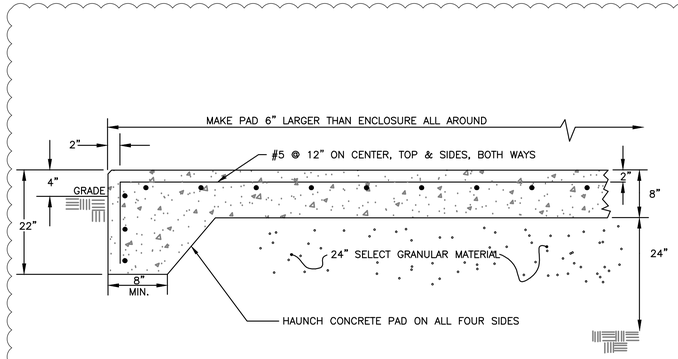

NOTES:

1. SEE CE-201 FOR PAD DIMENSIONS.
2. CONTRACTOR SHALL INSTALL 24" OF #57 STONE OR APPROVED EQUAL BENEATH PAD.

B CE401 **CONCRETE PAD**
SCALE: NONE

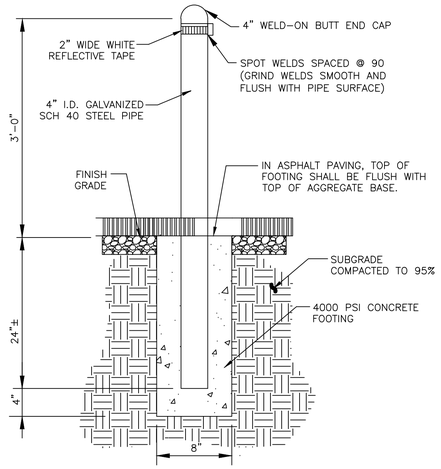

C CE401 **PIPE BOLLARD**
SCALE: NONE

1

SITE ELECTRIC DETAILS
SCALE: AS SHOWN

REVISED DRAWING 8-9-2016

NYS OFFICE OF GENERAL SERVICES
Serving New York
ANDREW M. CUOMO
Governor
ROANN M. DESTITO
Commissioner

CONSULTANT

RMF ENGINEERING, P.C.
5520 RESEARCH PARK DR., SUITE 300
BALTIMORE, MD 21228

WARNING:
THE ALTERATION OF THIS MATERIAL IN ANY WAY, UNLESS DONE UNDER THE DIRECTION OF A COMPARABLE PROFESSIONAL, I.E. ARCHITECT FOR AN ARCHITECT, ENGINEER FOR AN ENGINEER OR LANDSCAPE ARCHITECT FOR A LANDSCAPE ARCHITECT, IS A VIOLATION OF THE NEW YORK STATE EDUCATION LAW AND/OR REGULATIONS AND IS A CLASS "A" MISDEMEANOR.

STATE OF NEW YORK · JAMES KENYON BIGGS · LICENSED PROFESSIONAL ENGINEER

CONTRACT: ELECTRICAL
TITLE: REPLACE SWITCHGEAR
LOCATION: PERRY B. DURYEA STATE OFFICE BLDG. 250 VETERANS MEMORIAL HIGHWAY, HAUPPAUGE, NY 11788
CLIENT: NYS OFFICE OF GENERAL SERVICES

MARK	DATE	DESCRIPTION
1	08-24-2016	ADDENDUM NO. 3
	6-22-2016	FINAL SUBMISSION

PROJECT NUMBER:	44180-E
DESIGNED BY:	SRB
DRAWN BY:	SRB
FIELD CHECK:	SRB
APPROVED:	WAE

SHEET TITLE: SITE ELECTRIC DETAILS

DRAWING NUMBER: CE-401

SHEET 05 OF 25

DRAWING LEGEND	
RESTORATION LEGEND	
SYMBOL	DESCRIPTION
	ASPHALT PAVEMENT (C–CONTRACT)
	INTERMEDIATE CONTOUR (C–CONTRACT)
	LIGHT POLE
e	DIRECT BURIED 2" PVC CONDUIT
	PIPE BOLLARD 1

NOTES:

1. PROPOSED DUCTBANK ALIGNMENTS AND SWITCHGEAR BUILDING ARE SHOWN FOR REFERENCE ONLY.
2. SEE PANEL SCHEDULE ON DWG E–609 FOR SITE LIGHTING CIRCUIT.

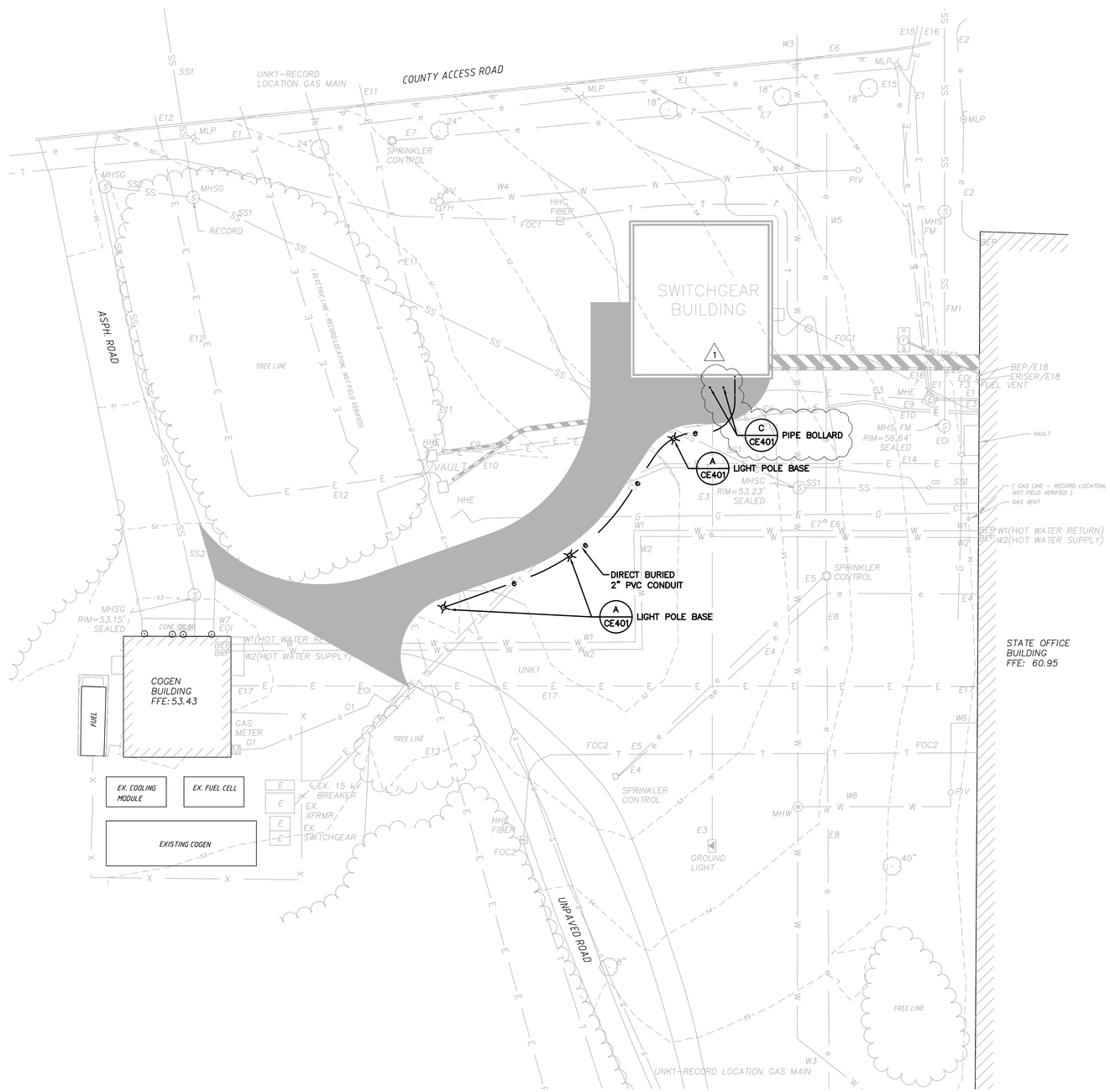

ELECTRIC RESTORATION PLAN

SCALE: 1" = 20–0'

GRAPHIC SCALE
20 10 0 20 40
SCALE: 1"=20'–0"
UNIT OF MEASURE: FEET

REVISED DRAWING 8-9-2016

NYS OFFICE OF GENERAL SERVICES
Serving New York
ANDREW M. CUOMO
Governor
ROANN M. DESTITO
Commissioner

CONSULTANT

RMF ENGINEERING, P.C.
5520 RESEARCH PARK DR., SUITE 300
BALTIMORE, MD 21228

WARNING:
THE ALTERATION OF THIS MATERIAL IN ANY WAY, UNLESS DONE UNDER THE DIRECTION OF A COMPARABLE PROFESSIONAL, I.E. ARCHITECT FOR AN ARCHITECT, ENGINEER FOR AN ENGINEER OR LANDSCAPE ARCHITECT FOR A LANDSCAPE ARCHITECT, IS A VIOLATION OF THE NEW YORK STATE EDUCATION LAW AND/OR REGULATIONS AND IS A CLASS "A" MISDEMEANOR.

STATE OF NEW YORK
JAMES KENYON RIGGS
NO. 091491
LICENSED PROFESSIONAL ENGINEER

CONTRACT: ELECTRICAL

TITLE: REPLACE SWITCHGEAR

LOCATION:
PERRY B. DURYEA STATE OFFICE BLDG.
250 VETERANS MEMORIAL HIGHWAY,
HAUPPAUGE, NY 11788

CLIENT:
NYS OFFICE OF GENERAL SERVICES

MARK	DATE	DESCRIPTION
1	08–24–2016	ADDENDUM NO. 3
	6–22–2016	FINAL SUBMISSION

PROJECT NUMBER:	44180–E
DESIGNED BY:	SRB
DRAWN BY:	SRB
FIELD CHECK:	SRB
APPROVED:	WAE

SHEET TITLE:
ELECTRIC RESTORATION PLAN

DRAWING NUMBER:
CE-501

SHEET 06 OF 25

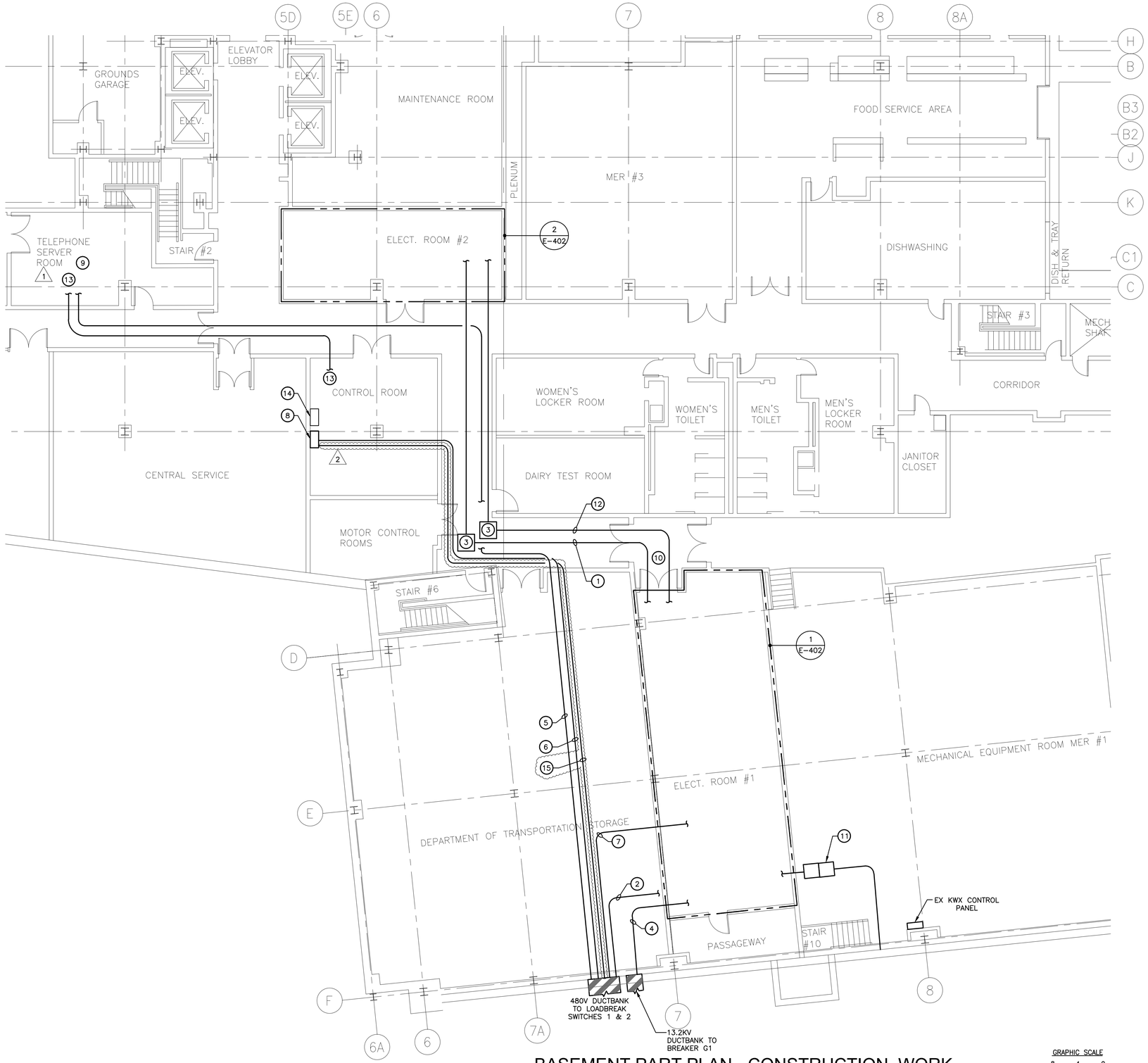

BASEMENT PART PLAN - CONSTRUCTION WORK

SCALE: 1/8" = 1-0'

GRAPHIC SCALE

8 4 0 8 16

SCALE: 1/8"=1'-0"
UNIT OF MEASURE: FEET

GENERAL NOTES:

1. MODIFICATIONS TO THE EXISTING HALLWAY CEILING FOR CONDUIT INSTALLATION SHALL BE COMPLETED UNDER THE " C CONTRACT".
2. AS PART OF CEILING REMOVAL FOR CONDUITS INSTALLATION, DISCONNECT 1 CAMERA, 6 (2X4) LIGHTING FIXTURES AND 2 SMOKE DETECTORS. ONCE THE CEILING IS FINISHED, RECONNECT THE ABOVE DEVICES. SEE ARCHITECTURAL DRAWING A-100 IN C-CONTRACT.

DRAWING NOTES:

1. FIELD ROUTE 2000A FEEDER FROM 480V SWITCHGEAR E-1 TO 480V SWITCHGEAR E-2. CONDUITS SHALL BE TRAPEZE MOUNTED ABOVE THE DROP CEILING IN THE EXISTING HALLWAY. UTILIZE THE SPARE 4" CONDUIT TO ROUTE THE TEMPORARY 13.2KV FEEDER TO THE SUBSTATION #2 TRANSFORMER. REMOVE FEEDER UPON REMOVAL OF THE SUBSTATION TRANSFORMERS AND SPLICE TO THE COGENERATION FEED PER DRAWING NOTE 4 ON THIS PAGE.
2. FIELD ROUTE 4000A SERVICE ENTRANCE FEEDERS TO 480V MAIN SWITCHGEAR. CONDUITS SHALL BE TRAPEZE MOUNTED FROM THE DOT STORAGE CEILING.
3. GALVANIZED STEEL PULL BOX 32"X32"X18" TO BE MOUNTED ABOVE THE HALLWAY DROP CEILING.
4. 13.2KV FEEDER FROM SWITCHGEAR BREAKER G1. FEED TO BE FIELD ROUTED TO THE PRIMARY SIDE OF SUBSTATION 1 TRANSFORMER AND JUMPERED TO THE PRIMARY SIDE OF SUBSTATION 2 TRANSFORMER TO SERVE AS A TEMPORARY FEED PER THE PHASING PLAN IN THE PROJECT MANUAL. UPON REMOVAL OF THE EXISTING SUBSTATION TRANSFORMERS, CONTRACTOR SHALL SPLICE TO THE EXISTING COGENERATION FEED CURRENTLY FEEDING THE LOAD BREAK SWITCH IN THE MECHANICAL EQUIPMENT ROOM.
5. (1, 2) ROUTE 1-2" RGS CONDUIT TO SECURITY OFFICE FOR CONNECTION TO EXISTING CCTV SYSTEM. ALSO ROUTE 1-2" RGS CONDUIT TO SECURITY OFFICE FOR CONNECTION TO EXISTING FIRE ALARM SYSTEM. CCTV CABLE SHALL BE 16 FIBER 50/125 MULTIMODE FIBER OPTIC CABLE. PROVIDE FIBER OPTIC PATCH PANEL IN SECURITY OFFICE ADJACENT TO AN EXISTING RECEPTACLE AND TERMINATE FIBER OPTIC CABLE FOR FUTURE EXTENSION BY THE STATE.
6. ROUTE 2-2" RGS CONDUITS TO CONTROL ROOM FOR SCADA MONITORING OF SUBSTATION EQUIPMENT.
7. ROUTE 2-2" RGS CONDUITS TO ELECTRICAL ROOM #1 FOR CONNECTION TO REMOTE PLC CONTROL SYSTEM FOR 480V SWITCHGEAR.
8. SUBSTATION MIMIC PANEL TO BE INSTALLED IN CONTROL ROOM.
9. EXISTING SECURITY OFFICE LOCATED ON FLOOR ABOVE TELEPHONE SERVER ROOM.
10. PROVIDE AND INSTALL 2-2X4 FLUORESCENT LIGHT FIXTURES IN NEW CEILING WIRED FROM EXISTING 20A, 120V LIGHTING CIRCUIT.
11. EXISTING SWITCH TO BE USED AS PULLBOX FOR COGEN FEEDER.
12. ROUTE 6-3.5", 2-2.5" AND 1-2" RGS METAL CONDUITS VIA TRAPEZE MOUNTING ABOVE EXISTING DROP CEILING. FOR EXISTING SUBSTATION 2 RELOCATE LOADS TO SWITCHGEAR E-1.
13. (1, 2) ROUTE CAT6A CABLE WITH OVERALL SHIELD IN 3/4" RGS CONDUIT FROM SECURITY OFFICE TO CONTROL ROOM FOR CCTV MONITOR. PROVIDE 10' SPARE CABLE COILED AT EACH END OF CONDUIT FOR FACILITY USE. TERMINATE CAT6A CABLE ON EACH END WITH RJ45 CONNECTORS.
14. EXISTING MASTER CONTROL PANEL.
15. (2) ROUTE 3-#8 AWG FOR DC POWER IN A 2" RGS CONDUIT TO PLC SUBSTATION MIMIC PANEL FOR POWER SOURCE.

REVISED DRAWING 8-9-2016

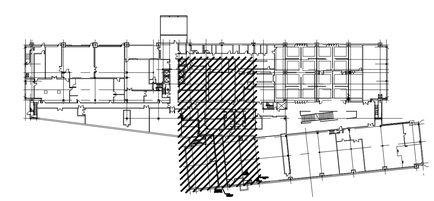

KEY PLAN

SCALE: NONE

N

NYS OFFICE OF GENERAL SERVICES

Serving New York

ANDREW M. CUOMO
Governor
ROANN M. DESTITO
Commissioner

CONSULTANT

RMF ENGINEERING, P.C.
5520 RESEARCH PARK DR., SUITE 300
BALTIMORE, MD 21228

WARNING:

THE ALTERATION OF THIS MATERIAL IN ANY WAY, UNLESS DONE UNDER THE DIRECTION OF A COMPARABLE PROFESSIONAL, I.E. ARCHITECT FOR AN ARCHITECT, ENGINEER FOR AN ENGINEER OR LANDSCAPE ARCHITECT FOR A LANDSCAPE ARCHITECT, IS A VIOLATION OF THE NEW YORK STATE EDUCATION LAW AND/OR REGULATIONS AND IS A CLASS "A" MISDEMEANOR.

STATE OF NEW YORK · ANDREW JONATHAN HAY · No. 089313-1 · LICENSED PROFESSIONAL ENGINEER · 6/17/16

CONTRACT: ELECTRICAL

TITLE: REPLACE SWITCHGEAR

LOCATION: PERRY B. DURYEA STATE OFFICE BLDG. 250 VETERANS MEMORIAL HIGHWAY, HAUPPAUGE, NY 11788

CLIENT: NYS OFFICE OF GENERAL SERVICES

MARK	DATE	DESCRIPTION
2	08-24-2016	ADDENDUM NO. 3
1	08-09-2016	ADDENDUM NO. 1
	06-22-2016	FINAL SUBMISSION

PROJECT NUMBER:	44180-E
DESIGNED BY:	JTM
DRAWN BY:	KT
FIELD CHECK:	JTM
APPROVED:	WAE

SHEET TITLE: BASEMENT PART PLAN - ELECTRICAL - CONSTRUCTION WORK

DRAWING NUMBER: E-102

SHEET 08 OF 27

REVISED 8-23-16

GENERAL NOTES:

1. PROVIDE 4" HOUSEKEEPING PADS FOR ALL ELECTRICAL EQUIPMENT SHOWN.
2. ALL UNIT HEATERS, THERMOSTATS, EXHAUST FANS, CONTROL PANELS, EYE WASH STATIONS, AIR CONDITIONERS AND HEAT PUMPS TO BE INSTALLED BY THE 'H CONTRACT' AND WIRED BY THE 'E CONTRACT'.
3. REFER TO DRAWING E-609 FOR PANELBOARD PP-AUX SCHEDULE.
4. ALL EXTERIOR CONDUIT TO BE ROUTED AS CLOSE TO THE ROOF AS POSSIBLE IN A STRAIGHT

DRAWING NOTES:

1. CONDUIT FROM 13.2kV SWITCHGEAR TO XFMRS T-1 AND T-2 SHALL BE UNDERSLAB.
2. EF-1 AND EF-2 VFD'S TO BE FURNISHED BY H CONTRACT, E CONTRACT SHALL PROVIDE ALL WIRING AND CONDUITS.
3. 3'X3'X5' NEMA 3R REVENUE METERING ENCLOSURE WITH HINGED DOOR, PREVISION FOR PADLOCKING TO BE PROVIDED BY CONTRACTOR. FURNISH ENCLOSURE WITH LIGHT SWITCH RECEPTACLE, THERMOSTAT AND STRIP HEATER. ROUTE 2-1" RGS CONDUITS FROM EACH 13.2KV SWITCHGEAR REVENUE METERING CUBICLES TO THE REMOTE METERING ENCLOSURE AND ASSOCIATED PT AND CT WIRING PER THE CONDUCTOR SCHEDULE ON DRAWING E-610. METERS AND TOTALIZER TO BE PROVIDED BY PSEG-LI. WIRING FROM SECONDARY SIDE OF METERING PTS AND CTS TO BE TERMINATED BY PSEG-LI AT THE METERS. ENCLOSURE TO BE MOUNTED AGAINST EXTERIOR WALL. SEAL ALL PENETRATIONS.
4. ROUTE 3-#8 AWG FOR DC POWER IN A 2" RGS CONDUIT TO PLC SUBSTATION MIMIC PANEL FOR POWER SOURCE.

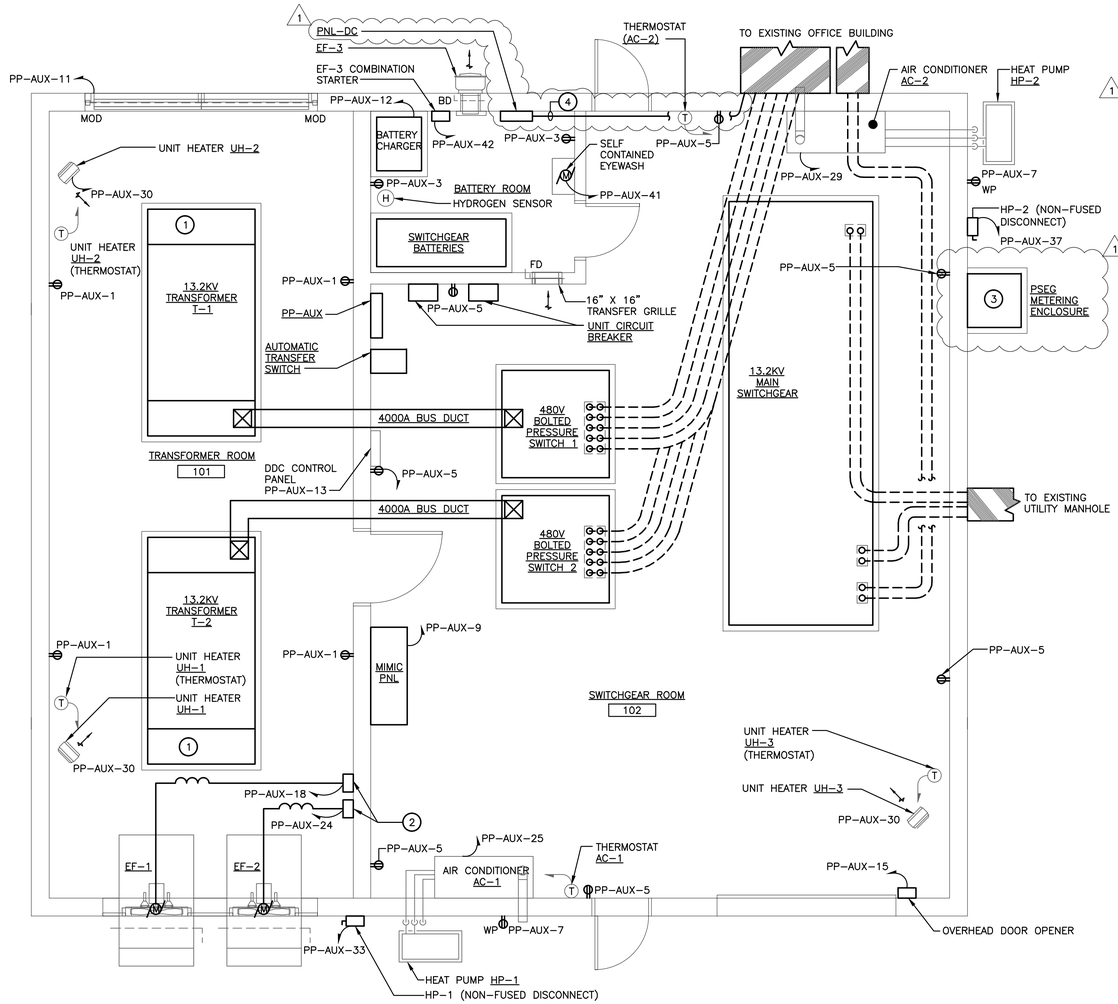

SWITCHGEAR HOUSE – ELECTRICAL – CONSTRUCTION WORK

SCALE: 1/4" = 1'-0"

REVISED DRAWING 8-9-2016

GRAPHIC SCALE
4 2 0 4 8
SCALE: 1/4"=1'-0"
UNIT OF MEASURE: FEET

NYS OFFICE OF GENERAL SERVICES
Serving New York
ANDREW M. CUOMO
Governor
ROANN M. DESTITO
Commissioner

CONSULTANT

RMF ENGINEERING, P.C.
5520 RESEARCH PARK DR., SUITE 300
BALTIMORE, MD 21228

WARNING:
THE ALTERATION OF THIS MATERIAL IN ANY WAY, UNLESS DONE UNDER THE DIRECTION OF A COMPARABLE PROFESSIONAL, I.E. ARCHITECT FOR AN ARCHITECT, ENGINEER FOR AN ENGINEER OR LANDSCAPE ARCHITECT FOR A LANDSCAPE ARCHITECT, IS A VIOLATION OF THE NEW YORK STATE EDUCATION LAW AND/OR REGULATIONS AND IS A CLASS 'A' MISDEMEANOR.

STATE OF NEW YORK · ANDREW JONATHAN HAY · No. 089313-1 · LICENSED PROFESSIONAL ENGINEER · 6/17/16

CONTRACT: ELECTRICAL

TITLE: REPLACE SWITCHGEAR

LOCATION: PERRY B. DURYEA STATE OFFICE BLDG. 250 VETERANS MEMORIAL HIGHWAY, HAUPPAUGE, NY 11788

CLIENT: NYS OFFICE OF GENERAL SERVICES

MARK	DATE	DESCRIPTION
1	08-24-2016	ADDENDUM NO. 3
	06-22-2016	FINAL SUBMISSION

PROJECT NUMBER:	44180-E
DESIGNED BY:	JTM
DRAWN BY:	JNS
FIELD CHECK:	JTM
APPROVED:	WAE

SHEET TITLE: SWITCHGEAR HOUSE - CONSTRUCTION WORK

DRAWING NUMBER: E-403

SHEET 11 OF 27

REVISED 8-23-16

GENERAL NOTES:

1. CCTV CAMERAS SHALL BE TIED INTO EXISTING SECURITY SYSTEM FOR REMOTE MONITORING FROM THE OFFICE BUILDING SECURITY OFFICE AND FROM THE BUILDING MANAGER'S OFFICE. OFFICE OF GENERAL SERVICES (OGS) WILL FURNISH THE CAMERAS FOR INSTALLATION BY THE CONTRACTOR. FINAL CONNECTIONS TO BE MADE BY OGS.
2. FIRE ALARM SYSTEM SHALL BE TIED INTO EXISTING SIMPLEX FIRE ALARM CONTROL PANEL LOCATED IN THE CONTROL ROOM IN THE FIRST FLOOR SECURITY OFFICE.
3. ALL NEW DEVICES TO BE LOOP POWERED BY EXISTING CONTROL PANELS. ALL NEW WIRING SHALL BE IN 3/4" RGS CONDUIT.

DRAWING NOTES:

1. FIBER OPTIC PATCH PANEL TO BE PROVIDED BY ELECTRICAL CONTRACTOR. TERMINATE FIBER OPTIC CABLE FOR CCTV SYSTEM FROM SECURITY OFFICE IN PATCH PANEL. ROUTE CAT6A CABLE IN 3/4" RGS CONDUIT FROM PATCH PANEL TO EACH CCTV CAMERA LOCATION. EACH END OF CAT6A CABLE SHALL BE TERMINATED WITH RJ-45 CONNECTOR AND HAVE 6' OF COILED SPARE CABLE.

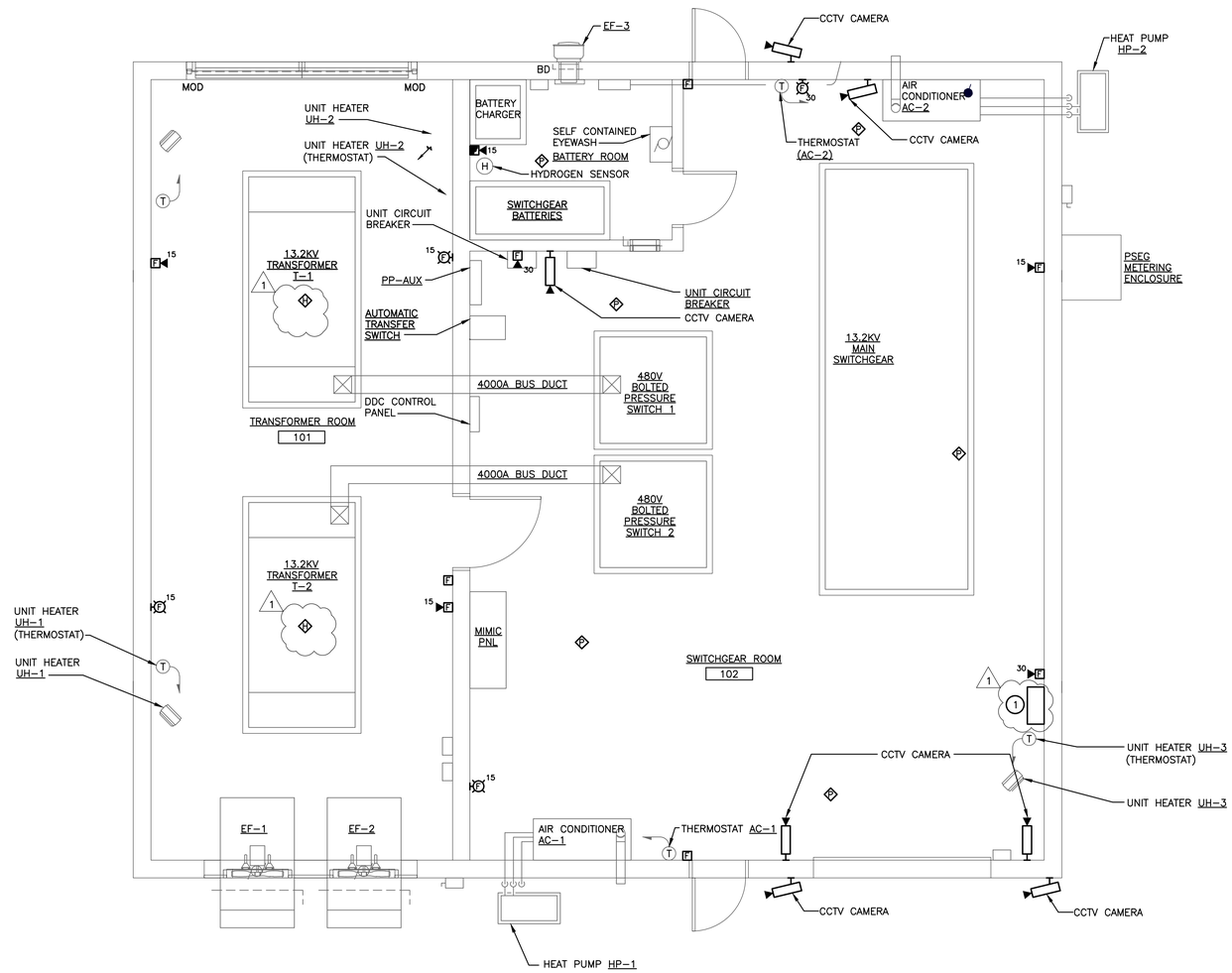

SWITCHGEAR HOUSE – SPECIAL SYSTEMS – CONSTRUCTION WORK

SCALE: 1/4" = 1'-0"

REVISED DRAWING 8-9-2016

GRAPHIC SCALE
4 2 0 4 8
SCALE: 1/4"=1'-0"
UNIT OF MEASURE: FEET

NYS OFFICE OF GENERAL SERVICES
Serving New York
ANDREW M. CUOMO
Governor
ROANN M. DESTITO
Commissioner

CONSULTANT

RMF ENGINEERING, P.C.
5520 RESEARCH PARK DR., SUITE 300
BALTIMORE, MD 21228

WARNING:
THE ALTERATION OF THIS MATERIAL IN ANY WAY, UNLESS DONE UNDER THE DIRECTION OF A COMPARABLE PROFESSIONAL, I.E. ARCHITECT FOR AN ARCHITECT, ENGINEER FOR AN ENGINEER OR LANDSCAPE ARCHITECT FOR A LANDSCAPE ARCHITECT, IS A VIOLATION OF THE NEW YORK STATE EDUCATION LAW AND/OR REGULATIONS AND IS A CLASS 'A' MISDEMEANOR.

STATE OF NEW YORK
ANDREW JONATHAN HAY
No. 089313-1
LICENSED PROFESSIONAL ENGINEER
6/17/16

CONTRACT: ELECTRICAL

TITLE: REPLACE SWITCHGEAR

LOCATION: PERRY B. DURYEA STATE OFFICE BLDG. 250 VETERANS MEMORIAL HIGHWAY, HAUPPAUGE, NY 11788

CLIENT: NYS OFFICE OF GENERAL SERVICES

MARK	DATE	DESCRIPTION
1	08-24-2016	ADDENDUM NO. 3
	06-22-2016	FINAL SUBMISSION

PROJECT NUMBER: 44180-E
DESIGNED BY: JTM
DRAWN BY: JNS
FIELD CHECK: JTM
APPROVED: WAE

SHEET TITLE: SWITCHGEAR HOUSE - SPECIAL SYSTEMS - CONSTRUCTION WORK

DRAWING NUMBER: E-405

SHEET 13 OF 27

REVISED 8-23-16

GENERAL NOTES:

1. SIWTCHGEAR MIMIC PANEL CAPABLE OF MONITORING STATUS OF ALL BREAKERS, OPERATING ALL BREAKERS, AND METERING ALL INCOMING AND OUTGOING FEEDERS SHALL BE PROVIDED IN THE SWITCHGEAR BUILDING. THIS PANEL SHALL REPORT BACK TO THE EXISTING SCADA SYSTEM IN THE OFFICE BUILDING.
2. AUTOMATIC LOAD TRANSFER SHALL BE PROVIDED ON THE 13.2KV MAIN SWITCHGEAR AND 480V SWITCHGEAR E–1.
3. REFER TO DRAWING C–201 FOR OUTDOOR EQUIPMENT LOCATIONS.
4. REFER TO DRAWING E–603 FOR RELAYING, INSTRUMENT TRANSFORMERS AND METERING.

DRAWING NOTES:

1. 1 SET OF 4 – # 2 AWG + # 8 AWG GROUND IN 1 1/4" RGS CONDUIT.
2. SPLICE TO EXISTING COGENERATION FEEDER IN EXISTING 15KV SWITCH CUBICLE.
3. GENERATOR FEEDER TO BE UTILIZED AS TEMPORARY FEEDER TO SUBSTATION TRANSFORMERS 1 & 2 IN OFFICE BUILDING. SPLICE TEMPORARY FEEDER TO EXISTING COGENERATION FEEDER TO SERVE AS PERMANENT GENERATOR FEEDER TO THE 13.2KV SWITCHGEAR PER THE PROJECT PHASING PLAN IN THE PROJECT MANUAL.
4. PROVIDE A 4–POLE BREAKER FOR LM1 AND LM2.
5. PROVIDE CONTROL POWER TRANSFORMER FOR SWITCHGEAR CONTROL. CPT SHALL BE CONNECTED ON LINE SIDE OF MAIN BREAKER.
6. INTERLOCK MAIN BREAKERS AND TIE BREAKER (LM1, LM2, LT) ELECTRICALLY SUCH THAT ONLY TWO BREAKERS CAN BE CLOSED AT ANY GIVEN TIME.

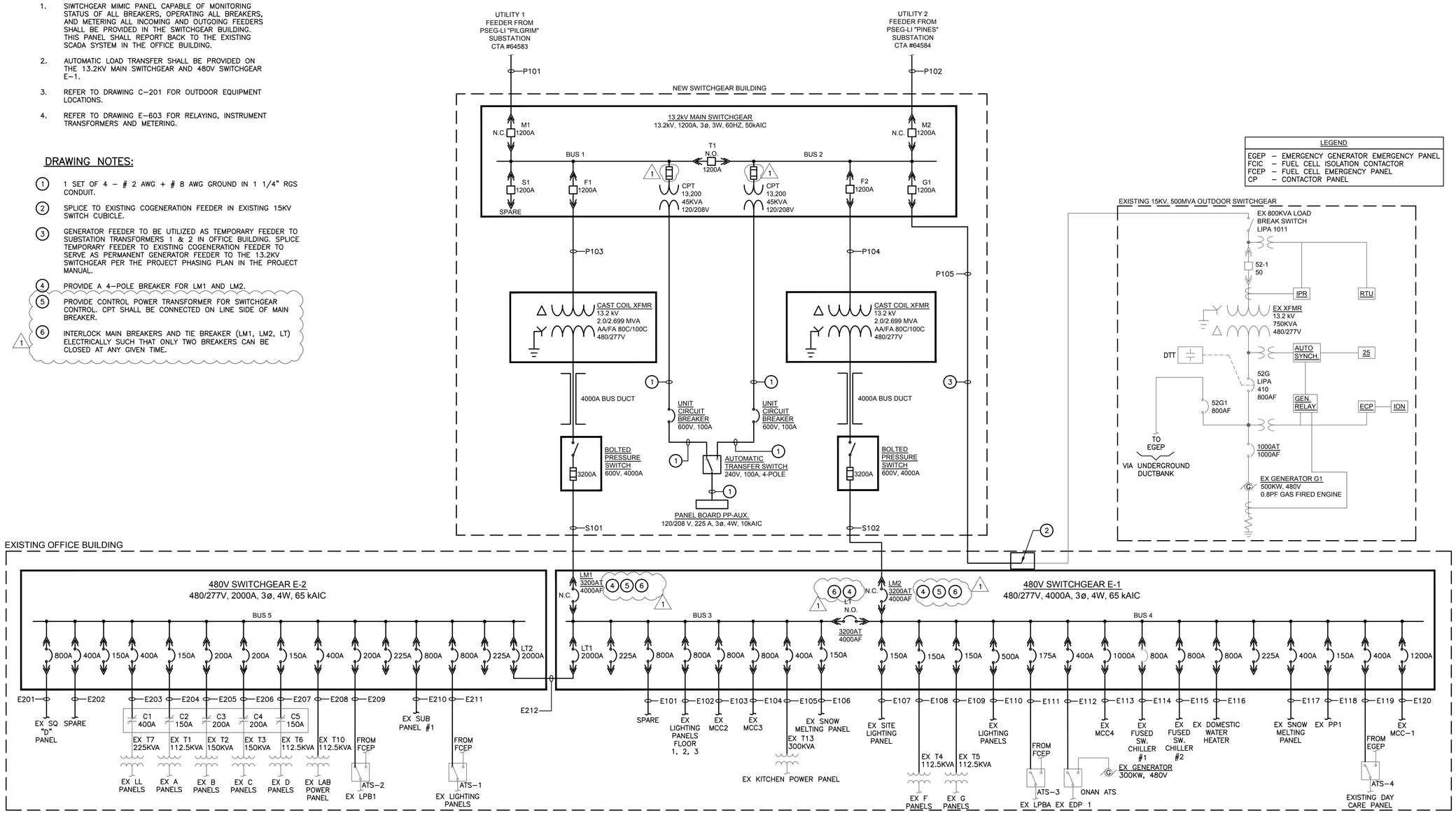

LEGEND	
EGEP	– EMERGENCY GENERATOR EMERGENCY PANEL
FCIC	– FUEL CELL ISOLATION CONTACTOR
FCEP	– FUEL CELL EMERGENCY PANEL
CP	– CONTACTOR PANEL

REVISED DRAWING 8-9-2016

NYS OFFICE OF GENERAL SERVICES
Serving New York
ANDREW M. CUOMO, Governor
ROANN M. DESTITO, Commissioner

CONSULTANT

RMF ENGINEERING, P.C.
5520 RESEARCH PARK DR., SUITE 300
BALTIMORE, MD 21228

WARNING:
THE ALTERATION OF THIS MATERIAL IN ANY WAY, UNLESS DONE UNDER THE DIRECTION OF A COMPARABLE PROFESSIONAL, I.E. ARCHITECT FOR AN ARCHITECT, ENGINEER FOR AN ENGINEER OR LANDSCAPE ARCHITECT FOR A LANDSCAPE ARCHITECT, IS A VIOLATION OF THE NEW YORK STATE EDUCATION LAW AND/OR REGULATIONS AND IS A CLASS "A" MISDEMEANOR.

STATE OF NEW YORK · ANDREW JONATHAN KAY · No. 089313-1 · LICENSED PROFESSIONAL ENGINEER

CONTRACT: ELECTRICAL

TITLE: REPLACE SWITCHGEAR

LOCATION: PERRY B. DURYEA STATE OFFICE BLDG. 250 VETERANS MEMORIAL HIGHWAY, HAUPPAUGE, NY 11788

CLIENT: NYS OFFICE OF GENERAL SERVICES

MARK	DATE	DESCRIPTION
1	08–24–2016	ADDENDUM NO. 3
	06–22–2016	FINAL SUBMISSION

PROJECT NUMBER:	44180–E
DESIGNED BY:	JTM
DRAWN BY:	KT
FIELD CHECK:	JTM
APPROVED:	WAE

SHEET TITLE: SINGLE LINE DIAGRAM - CONSTRUCTION WORK

DRAWING NUMBER: E-602

SHEET 17 OF 27

DRAWING NOTES:

1. SWITCHGEAR E–1 AND E–2 TO BE PROVIDED WITH ZONE SELECTIVE INTERLOCKING.
2. PROVIDE PROVISIONS INCLUDING DOOR CUT–OUT, CT'S WITH SHORTING BLOCKS, AND PT TERMINALS FOR CONNECTION TO EXISTING ION 7650 METER.
3. REVENUE METER AND TOTALIZER TO BE PROVIDED AND INSTALLED BY PSEG–LI. CONTRACTOR TO PROVIDE METERING ENCLOSURE AND ALL ASSOCIATED CONDUIT AND WIRING FROM THE SWITCHGEAR REVENUE METERING CUBICLES TO THE METERING ENCLOSURE. PSEG–LI TO MAKE ALL TERMINATIONS AT METERS.
4. METERING PT'S AND CT'S TO BE FURNISHED BY PSEG–LI AND INSTALLED BY THE ELECTRICAL CONTRACTOR IN A DEDICATED UTILITY METERING CUBICLE. TERMINATIONS TO PT AND CT SECONDARY SHALL BE MADE BY PSEG–LI.

GENERAL NOTES:

1. 13.2KV SWITCHGEAR AND 480V SWITCHGEAR TO BE PROVIDED BY SAME MANUFACTURER. IT SHALL BE THIS MANUFACTURER'S RESPONSIBILITY TO PROVIDE AN INTEGRATED PLC CONTROL SYSTEM CAPABLE OF METERING ALL 13.2KV FEEDERS AS WELL AS 480V MAIN AND TIE BREAKERS, REMOTELY OPERATE ALL CIRCUIT BREAKERS IN THE 13.2KV AND 480V SWITCHGEAR, AND AUTOMATICALLY SOURCE TRANSFER AT THE 13.2KV AND 480V LEVEL IN ACCORDANCE WITH THE SEQUENCE OF OPERATIONS PROVIDED IN THE PROJECT MANUAL. A MIMIC PANEL SHALL BE PROVIDED IN THE SWITCHGEAR HOUSE AS WELL AS IN THE OFFICE BUILDING THAT WILL DISPLAY REAL TIME STATUS OF ALL CIRCUIT BREAKERS AND GIVE THE ABILITY FOR REMOTE OPERATION. THE SCADA SYSTEM SHALL COMMUNICATE ALL DATA TO THE EXISTING OFFICE BUILDING CONTROL SYSTEM.

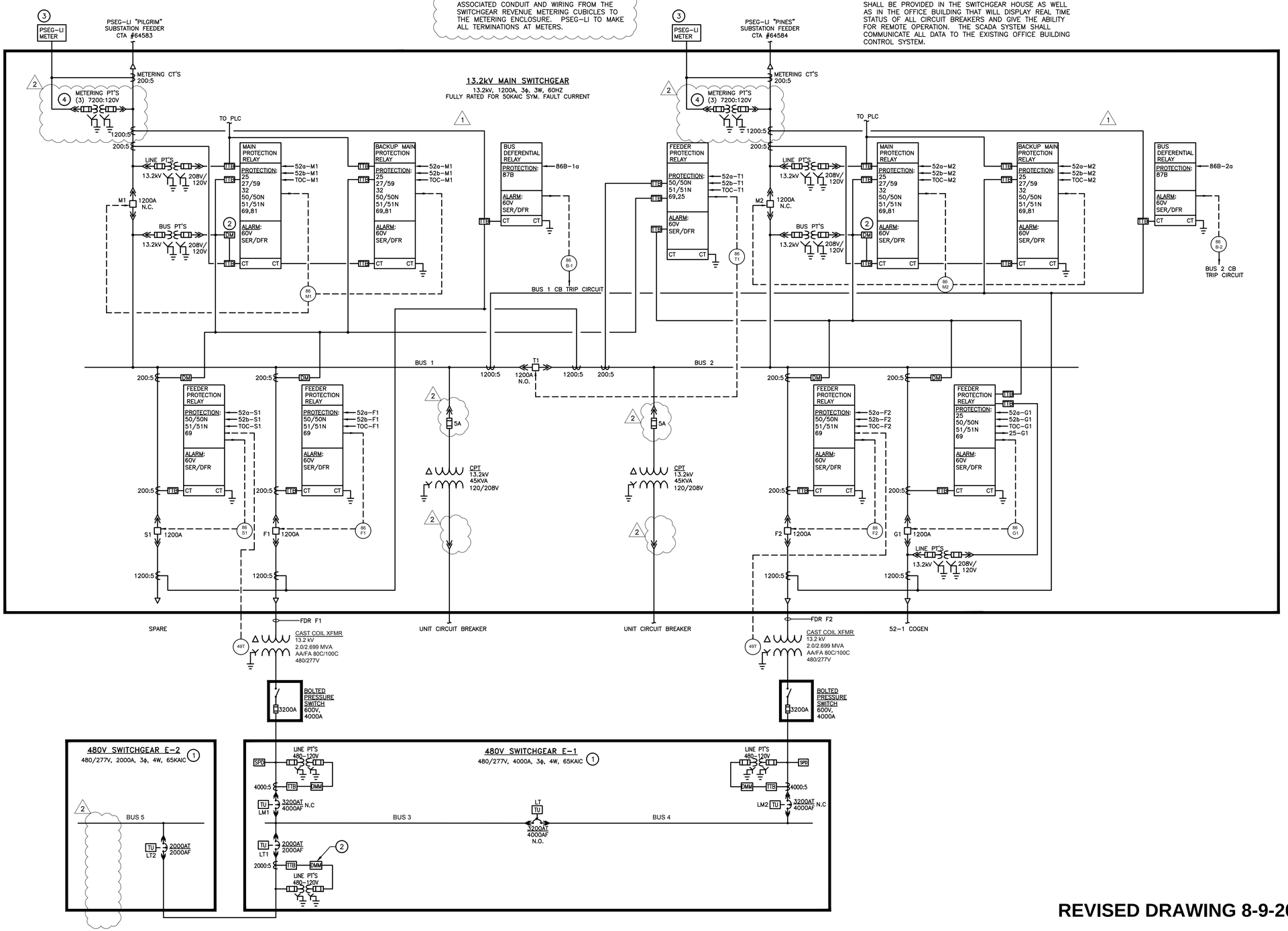

REVISED DRAWING 8-9-2016

NYS OFFICE OF GENERAL SERVICES
Serving New York
ANDREW M. CUOMO, Governor
ROANN M. DESTITO, Commissioner

CONSULTANT

RMF ENGINEERING, P.C.
5520 RESEARCH PARK DR., SUITE 300
BALTIMORE, MD 21228

WARNING:
THE ALTERATION OF THIS MATERIAL IN ANY WAY, UNLESS DONE UNDER THE DIRECTION OF A COMPARABLE PROFESSIONAL, I.E. ARCHITECT FOR AN ARCHITECT, ENGINEER FOR AN ENGINEER OR LANDSCAPE ARCHITECT FOR A LANDSCAPE ARCHITECT, IS A VIOLATION OF THE NEW YORK STATE EDUCATION LAW AND/OR REGULATIONS AND IS A CLASS "A" MISDEMEANOR.

STATE OF NEW YORK · ANDREW JONATHAN HAY · No. 089313-1 · LICENSED PROFESSIONAL ENGINEER · 6/17/16

CONTRACT: ELECTRICAL

TITLE: REPLACE SWITCHGEAR

LOCATION: PERRY B. DURYEA STATE OFFICE BLDG. 250 VETERANS MEMORIAL HIGHWAY, HAUPPAUGE, NY 11788

CLIENT: NYS OFFICE OF GENERAL SERVICES

MARK	DATE	DESCRIPTION
2	08–24–2016	ADDENDUM NO. 3
1	08–09–2016	ADDENDUM NO. 1
	06–22–2016	FINAL SUBMISSION

PROJECT NUMBER:	44180–E
DESIGNED BY:	JTM
DRAWN BY:	PRC
FIELD CHECK:	JTM
APPROVED:	AJH

SHEET TITLE: 13.2kV ELECTRICAL SYSTEM RELAY DIAGRAM - CONSTRUCTION WORK

DRAWING NUMBER: E-603

SHEET 18 OF 27

REVISED 8-23-16

RACEWAY AND CONDUCTOR SCHEDULE

CKT. NO:	FROM:	TO:	CONDUIT NUMBER OF SETS	CONDUIT SIZES	QUANTITY OF PHASE AND NEUTRAL CONDUCTORS	SIZE OF EACH PHASE AND NEUTRAL CONDUCTOR	EQUIP. GROUNDING CONDUCTOR	CONTROL WIRING	NOTES:
13.2kV Feeders									
P101	LIPA "PILGRIM" SUBSTATION	13.2KV MAIN SWITCHGEAR	1	4	3	#1/0	#6		
P102	LIPA "PINES" SUBSTATION	13.2KV MAIN SWITCHGEAR	1	4	3	#1/0	#6		
P103	13.2KV MAIN SWITCHGEAR	CAST COIL XFMR	1	4	3	#1/0	#6		
P104	13.2KV MAIN SWITCHGEAR	CAST COIL XFMR	1	4	3	#1/0	#6		
P105	13.2KV MAIN SWITCHGEAR	TO EXISTING GENERATOR G-1	1	4	3	#1/0	#6		
480V SWGR E-1									
S-101	Bolted Pressure Switch	480V SWGR E-1	7	4"	3+N	7-750kcmil	500kcmil		
S-102	Bolted Pressure Switch	480V SWGR E-1	7	4"	3+N	7-750kcmil	500kcmil		
E-101	480V Switchgear E-1	SPARE	-	-	-	-	-		
E-102	480V Switchgear E-1	EXISTING LIGHTING PANELS	2	3.5"	3+N	2-500kcmil	#1/0		
E-103	480V Switchgear E-1	EXISTING MCC 2	2	3.5"	3+N	2-500kcmil	#1/0		
E-104	480V Switchgear E-1	EXISTING MCC 3	2	3.5"	3+N	2-500kcmil	#1/0		
E-105	480V Switchgear E-1	EXISTING KITCHEN POWER PANEL	2	2.5"	3+N	2-#4/0	#3		
E-106	480V Switchgear E-1	EXISTING SNOWMELTING PANEL	1	2"	3+N	#2/0	#6		
E-107	480V Switchgear E-1	EXISTING SITE LIGHTING PANEL	1	2"	3+N	#2/0	#6		
E-108	480V Switchgear E-1	EXISTING F PANELS	1	2"	3+N	#2/0	#1/0		
E-109	480V Switchgear E-1	EXISTING G PANELS	1	2"	3+N	#2/0	#1/0		
E-110	480V Switchgear E-1	EXISTING LIGHTING PANELS	2	2.5"	3+N	2-300 kcmil	#2		
E-111	480V Switchgear E-1	ESISTING LPBA	1	2"	3+N	#3/0	#6		
E-112	480V Switchgear E-1	EXISTING EDP 1	1	3.5"	3+N	500kcmil	#3		
E-113	480V Switchgear E-1	EXISTING MCC 4	3	3.5"	3+N	3-500 kcmil	#1/0		
E-114	480V Switchgear E-1	EXISTING FUSED SWITCH CHILLER # 1	2	3.5"	3+N	2-500kcmil	#1/0		
E-115	480V Switchgear E-1	EXISTING FUSED SWITCH CHILLER # 2	2	3.5"	3+N	2-500kcmil	#1/0		
E-116	480V Switchgear E-1	EXISTING DOMESTIC WATER HEATER	2	3.5"	3+N	2-500kcmil	#1/0		
E-117	480V Switchgear E-1	EXISTING SNOWMELTING PANEL	2	2.5"	3+N	2-#4/0	#3		
E-118	480V Switchgear E-1	EXISTING PP 1	3	3.5"	3+N	4-500 kcmil	#1/0		
E-119	480V Switchgear E-1	EXISTING DAY CARE PANEL	1	2"	3+N	#2/0	#6		
E-120	480V Switchgear E-1	EXISTING MCC 1	4	3.5"	3+N	4-500 kcmil	#2/0		
480V SWGR E-2									
E-201	480V Switchgear E-2	EXISTING SQ "D" PANEL	3	3"	3+N	3-350 kcmil	#1/0		
E-202	480V Switchgear E-2	SPARE	-	-	-	-	-		
E-203	480V Switchgear E-2	EXISTING LL PANELS	1	2.5"	3+N	#4/0	#6		
E-204	480V Switchgear E-2	EXISTING A PANELS	1	2"	3+N	#2/0	#6		
E-205	480V Switchgear E-2	EXISTING B PANELS	1	2.5"	3+N	#4/0	#6		
E-206	480V Switchgear E-2	EXISTING C PANELS	1	2.5"	3+N	#4/0	#6		
E-207	480V Switchgear E-2	EXISTING D PANELS	1	2"	3+N	#2/0	#6		
E-208	480V Switchgear E-2	EXISTING LAB POWER PANEL	1	1.25"	3+N	#2	#8		
E-209	480V Switchgear E-2	EXISTING LPB1	1	2.5"	3+N	#4/0	#6		
E-210	480V Switchgear E-2	EXISTING SUB PANEL # 1	2	3.5"	3+N	2-500kcmil	#1/0		
E-211	480V Switchgear E-2	EXISTING LIGHTING PANELS	2	3.5"	3+N	2-500kcmil	#1/0		
E-212	480V Switchgear E-2	480V SWITCHGEAR E-1	5	4"	3+N	5-600kcmil	250kcmil		

PANEL NO.: **PP-AUX**
USAGE: **POWER PANELBOARD**
LOCATION: **Switchgear House**
PHASE / FREQUENCY: **3 60 Hz**
L-L VOLTS **208**
L-G VOLTS **120**
BUS AMPS **225**
FAULT CURRENT RATIN **10,000**
MAIN CB AMPS **225**
AMBIENT TEMP. deg. C.: **40**

MOUNTING: **SURFACE**
PANEL TYPE: **SEE SPECIFICATIONS**

PANEL NOTES:
EQUIPPED WITH GROUND BUS
EQUIPPED WITH FULL SIZE NEUTRAL BUS
* - INDICATES C.B. EQUIPPED WITH "LOCK-ON" DEVICE
** - INDICATES C.B. IS GFCI TYPE 5 mA FOR RECEPTACLE CIRCUITS, 30 mA FOR HEAT TRACING CIRCUITS

CONDUIT TYPE	CONDUIT SIZE	PHASE & NEUTRAL SIZE	EGC SIZE	CKT AMPS	LOAD DESCRIPTION	C.B. POLES	C.B. TRIP	CIRCUIT NUMBER A B C	C.B. TRIP	C.B POLES	LOAD DESCRIPTION	CKT AMPS	CONDUIT SIZE	PHASE & NEUTRAL SIZE	EGC SIZE	CONDUIT TYPE
RMC	3/4"	#12	#12	**6.00**	XFMR RM. REC.	1	20	**1 A 2**	20	1	SWGR RM. LIGHTS	**11.17**	3/4"	#12	#12	RMC
RMC	3/4"	#12	#12	**3.00**	BATT. RM. REC.	1	20	**3 B 4**	20	1	BATT. ROOM LIGHTS	**0.92**	3/4"	#12	#12	RMC
RMC	3/4"	#12	#12	**9.00**	SWGR RM. REC.	1	20	**5 C 6**	20	1	XFMR ROOM LIGHTS	**5.60**	3/4"	#12	#12	RMC
RMC	3/4"	#12	#12	**3.00**	OUTDOOR REC.	1	20	**7 A 8**	20	1	OUTDOOR LIGHTS	**2.69**	3/4"	#12	#12	RMC
RMC	3/4"	#12	#12	**8.33**	SPARE	1	20	**9 B 10**	20	1	EM. LIGHTS	**8.33**	3/4"	#12	#12	RMC
RMC	3/4"	#12	#12	**8.33**	DAMPERS	1	20	**11 C 12**	50	3	BATT. CHARGER	**38.46**	3/4"	#6	#10	RMC
RMC	3/4"	#12	#12	**8.33**	DDC PANEL	1	20	**13 A 14**	-	-		**0.00**	-	-	-	RMC
RMC	3/4"	#12	#12	**8.33**	OVERHEAD DOOR	1	20	**15 B 16**	-	-		**0.00**	-	-	-	RMC
RMC	3/4"	#12	#12	**8.33**	OUTDOOR LIGHTS	1	20	**17 C 18**	20	3	EF-1	**5.91**	3/4"	#12	#12	RMC
RMC	3/4"	#10	#10	**20.83**	XFMR AUX	3	30	**19 A 20**	-	-		**0.00**	-	-	-	RMC
RMC	-	-	-	**0.00**		-	-	**21 B 22**	-	-		**0.00**	-	-	-	RMC
RMC	-	-	-	**0.00**		-	-	**23 C 24**	20	3	EF-2	**6.92**	3/4"	#12	#12	RMC
RMC	3/4"	#10	#12	**15.38**	AC-1	2	20	**25 A 26**	-	-		**0.00**	-	-	-	RMC
RMC	-	-	-	**0.00**		-	-	**27 B 28**	-	-		**0.00**	-	-	-	RMC
RMC	3/4"	#12	#12	**13.33**	AC-2	2	20	**29 C 30**	35	3	UH-1, -2, -3	**26.33**	3/4"	#8	#10	RMC
RMC	-	-	-	**0.00**		-	-	**31 A 32**	-	-		**0.00**	-	-	-	RMC
RMC	3/4"	#10	#10	**19.92**	HP-1	2	30	**33 B 34**	-	-		**0.00**	-	-	-	RMC
RMC	-	-	-	**0.00**		-	-	**35 C 36**	20	1	SITE LTG.	**7.50**	3/4"	#12	#12	RMC
RMC	3/4"	#10	#10	**19.92**	HP-2	2	30	**37 A 38**	20	1	SPARE	**0.00**	-	-	-	RMC
RMC	-	-	-	**0.00**		-	-	**39 B 40**	20	1	SPARE	**0.00**	-	-	-	RMC
RMC	3/4"	#12	#12	**8.75**	EYE WASH	1	20	**41 C 42**	20	1	EF-3	**8.33**	3/4"	#12	#12	RMC

REVISED DRAWING 8-9-2016

NYS OFFICE OF GENERAL SERVICES
Serving New York
ANDREW M. CUOMO
Governor
ROANN M. DESTITO
Commissioner

CONSULTANT

RMF ENGINEERING, P.C.
5520 RESEARCH PARK DR., SUITE 300
BALTIMORE, MD 21228

WARNING:
THE ALTERATION OF THIS MATERIAL IN ANY WAY, UNLESS DONE UNDER THE DIRECTION OF A COMPARABLE PROFESSIONAL, I.E. ARCHITECT FOR AN ARCHITECT, ENGINEER FOR AN ENGINEER OR LANDSCAPE ARCHITECT FOR A LANDSCAPE ARCHITECT, IS A VIOLATION OF THE NEW YORK STATE EDUCATION LAW AND/OR REGULATIONS AND IS A CLASS "A" MISDEMEANOR.

STATE OF NEW YORK · ANDREW JONATHAN KAY · No. 089213-1 · LICENSED PROFESSIONAL ENGINEER · 6/17/16

CONTRACT: ELECTRICAL
TITLE: REPLACE SWITCHGEAR
LOCATION: PERRY B. DURYEA STATE OFFICE BLDG. 250 VETERANS MEMORIAL HIGHWAY, HAUPPAUGE, NY 11788
CLIENT: NYS OFFICE OF GENERAL SERVICES

MARK	DATE	DESCRIPTION
1	08-24-2016	ADDENDUM NO. 3
	06-22-2016	FINAL SUBMISSION

PROJECT NUMBER: 44180-E
DESIGNED BY: JTM
DRAWN BY: KT
FIELD CHECK: JTM
APPROVED: WAE
SHEET TITLE: ELECTRICAL SCHEDULES
DRAWING NUMBER: E-609
SHEET 24 OF 27

CONTROL CONDUCTOR SCHEDULE

CKT. NO:	FROM:	TO:	QUANTITY CONDUCTORS	USED FOR:	SIZE	COLOR
Typical Medium Voltage Breaker Control/ Status (Typical of 7 Circuit Breakers)						
CC-BS	13.2kV SWGR	PLC Controller	12	52a Contact	#14	Black
				52a Contact	#14	Red
				52b Contact	#14	Blue
				52b Contact	#14	Orange
				PLC TOC Contact	#14	Yellow
				PLC TOC Contact	#14	Brown
				PLC Trip	#14	Red-Stripe Black
				PLC Trip	#14	Blue-Stripe Black
				PLC Close	#14	Orange-Stripe Black
				PLC Close	#14	Yellow-Stripe Black
				Lockout Relay N.O.	#14	Brown-Stripe Black
				Lockout Relay N.C.	#14	Black-Stripe Red
13.2kV SWGR PT Wiring						
CC-M1PT	13.2kV SWGR	PLC Controller	4	M1 Line PT	#14	Black
				M1 Line PT	#14	Red
				M1 Line PT	#14	Blue
				Spare	#14	Orange
CC-M2PT	13.2kV SWGR	PLC Controller	4	M2 Line PT	#14	Black
				M2 Line PT	#14	Red
				M2 Line PT	#14	Blue
				Spare	#14	Orange
CC-B1PT	13.2kV SWGR	PLC Controller	4	Bus 1 Bus PT	#14	Black
				Bus 1 Bus PT	#14	Red
				Bus 1 Bus PT	#14	Blue
				Spare	#14	Orange
CC-B2PT	13.2kV SWGR	PLC Controller	4	Bus 2 Bus PT	#14	Black
				Bus 2 Bus PT	#14	Red
				Bus 2 Bus PT	#14	Blue
				Spare	#14	Orange
13.2kV SWGR PSEG-LI Meter Wiring						
CC-U1PT	13.2kV SWGR	PSEG Meter	4	M1 Meter PT	#14	Black
				M1 Meter PT	#14	Red
				M1 Meter PT	#14	Blue
				Spare	#14	Orange
CC-U2PT	13.2kV SWGR	PSEG Meter	4	M2 Meter PT	#14	Black
				M2 Meter PT	#14	Red
				M2 Meter PT	#14	Blue
				Spare	#14	Orange
CC-U1CT	13.2kV SWGR	PSEG Meter	4	M1 Phase A CT	#12	Black
				M1 Phase B CT	#12	Red
				M1 Phase C CT	#12	Blue
				Common	#12	Orange
CC-U2CT	13.2kV SWGR	PSEG Meter	4	M2 Phase A CT	#12	Black
				M2 Phase B CT	#12	Red
				M2 Phase C CT	#12	Blue
				Common	#12	Orange
Bus Differential Lockout 86B Status to PLC						
CC-B1LO	13.2kV SWGR	PLC Controller	2	86N.O.	#14	Black
				86N.O.	#14	Red
CC-B2LO	13.2kV SWGR	PLC Controller	2	86N.O.	#14	Black
				86N.O.	#14	Red
13.2kV Main SWGR to Master Control Panel						
CC-MCP	EX MCP	13.2KV SWGR	12	M1 52a Contact	#14	Black
				M1 52a Contact	#14	Red
				M2 52a Contact	#14	Blue
				M2 52a Contact	#14	Orange
				M1 52b Contact	#14	Yellow
				M1 52b Contact	#14	Brown
				M2 52b Contact	#14	Red-Stripe Black
				M2 52b Contact	#14	Blue-Stripe Black
				SEL-751 M1 Output	#14	Orange-Stripe Black
				SEL-751 M1 Output	#14	Yellow-Stripe Black
				SEL-751 M2 Output	#14	Brown-Stripe Black
				SEL-751 M2 Output	#14	Black-Stripe Red
CC-NESC	EX MCP	13.2KV SWGR	4	43 NESC Trip	#6	Black
				43 NESC Trip	#6	Red
				Spare	#6	Blue
				Spare	#6	Orange
Typical Low Voltage Breaker Control/ Status (Typical of 25 Circuit Breakers in SWGR E-1)						
CC-LVBS	SWGR E-1	PLC Controller	6	Remote Close	#14	Black
				Remote Close	#14	Red
				Remote Trip	#14	Blue
				Remote Trip	#14	Orange
				Breaker Status	#14	Yellow
				Breaker Status	#14	Brown
Typical Low Voltage Breaker Control/ Status (Typical of 15 Circuit Breakers in SWGR E-2)						
CC-LVBS	SWGR E-2	PLC Controller	6	Remote Close	#14	Black
				Remote Close	#14	Red
				Remote Trip	#14	Blue
				Remote Trip	#14	Orange
				Breaker Status	#14	Yellow
				Breaker Status	#14	Brown

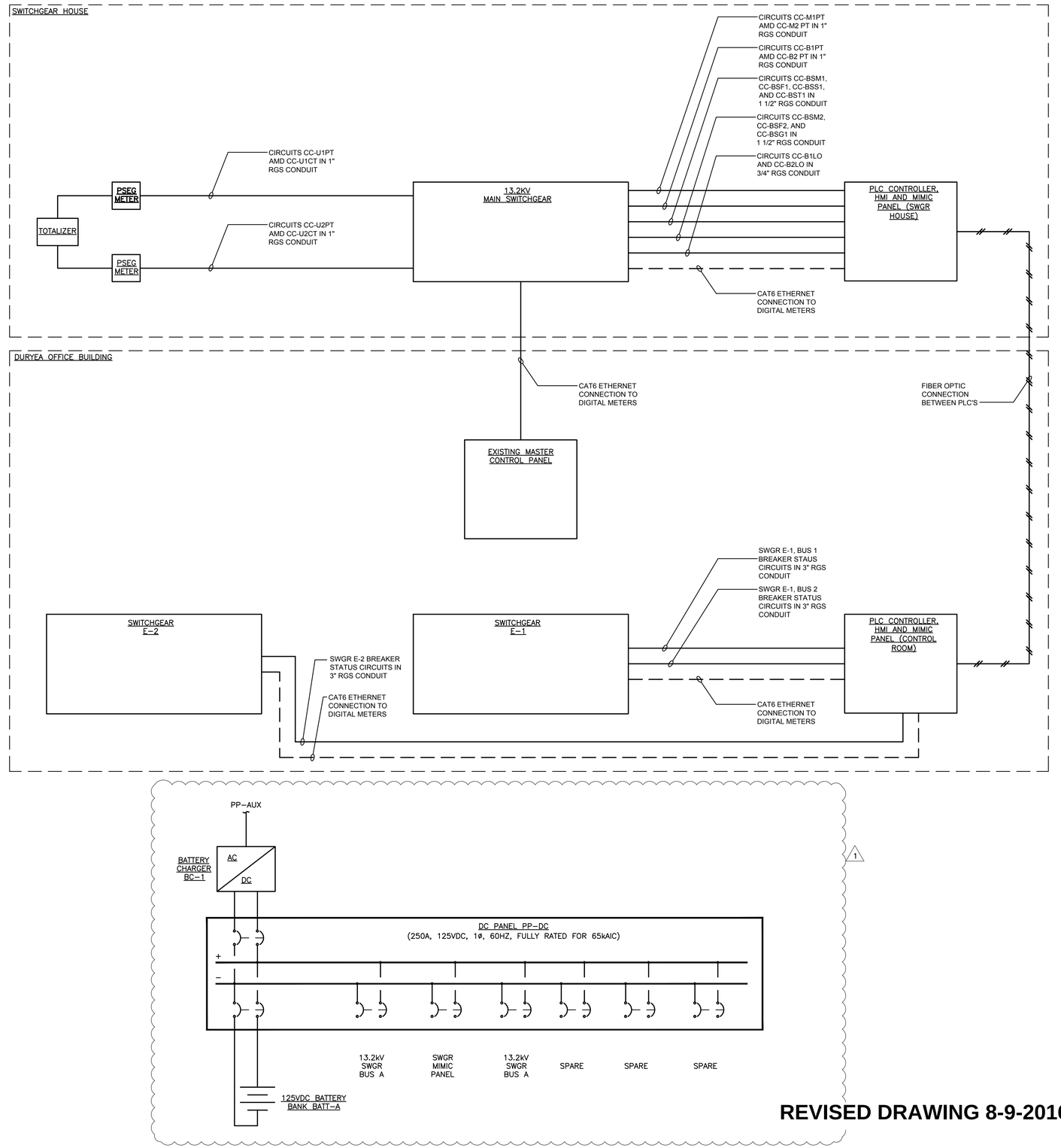

REVISED DRAWING 8-9-2016

NYS OFFICE OF GENERAL SERVICES

Serving New York

ANDREW M. CUOMO
Governor
ROANN M. DESTITO
Commissioner

CONSULTANT

RMF ENGINEERING, P.C.
5520 RESEARCH PARK DR., SUITE 300
BALTIMORE, MD 21228

WARNING:

THE ALTERATION OF THIS MATERIAL IN ANY WAY, UNLESS DONE UNDER THE DIRECTION OF A COMPARABLE PROFESSIONAL, I.E. ARCHITECT FOR AN ARCHITECT, ENGINEER FOR AN ENGINEER OR LANDSCAPE ARCHITECT FOR A LANDSCAPE ARCHITECT, IS A VIOLATION OF THE NEW YORK STATE EDUCATION LAW AND/OR REGULATIONS AND IS A CLASS "A" MISDEMEANOR.

STATE OF NEW YORK · ANDREW JONATHAN KAY · No. 089313-1 · LICENSED PROFESSIONAL ENGINEER · 6/17/16

CONTRACT: ELECTRICAL

TITLE: REPLACE SWITCHGEAR

LOCATION: PERRY B. DURYEA STATE OFFICE BLDG. 250 VETERANS MEMORIAL HIGHWAY, HAUPPAUGE, NY 11788

CLIENT: NYS OFFICE OF GENERAL SERVICES

MARK	DATE	DESCRIPTION
1	08-24-2016	ADDENDUM NO. 3
	06-22-2016	FINAL SUBMISSION

PROJECT NUMBER:	44180-E
DESIGNED BY:	JTM
DRAWN BY:	KT
FIELD CHECK:	JTM
APPROVED:	WAE

SHEET TITLE: CONTROL ARCHITECTURE DIAGRAM

DRAWING NUMBER: E-610

SHEET 25 OF 27

DRAWING LEGEND	
SITE PLAN LEGEND	
SYMBOL	DESCRIPTION
	SWITCHGEAR BUILDING (C CONTRACT)
—— T ——	COMMUNICATION CONDUIT (E CONTRACT)
	POWER DUCTBANK (E CONTRACT)
□	TELECOM HANDHOLE (E CONTRACT)
—— F ——	FUEL OIL PIPING

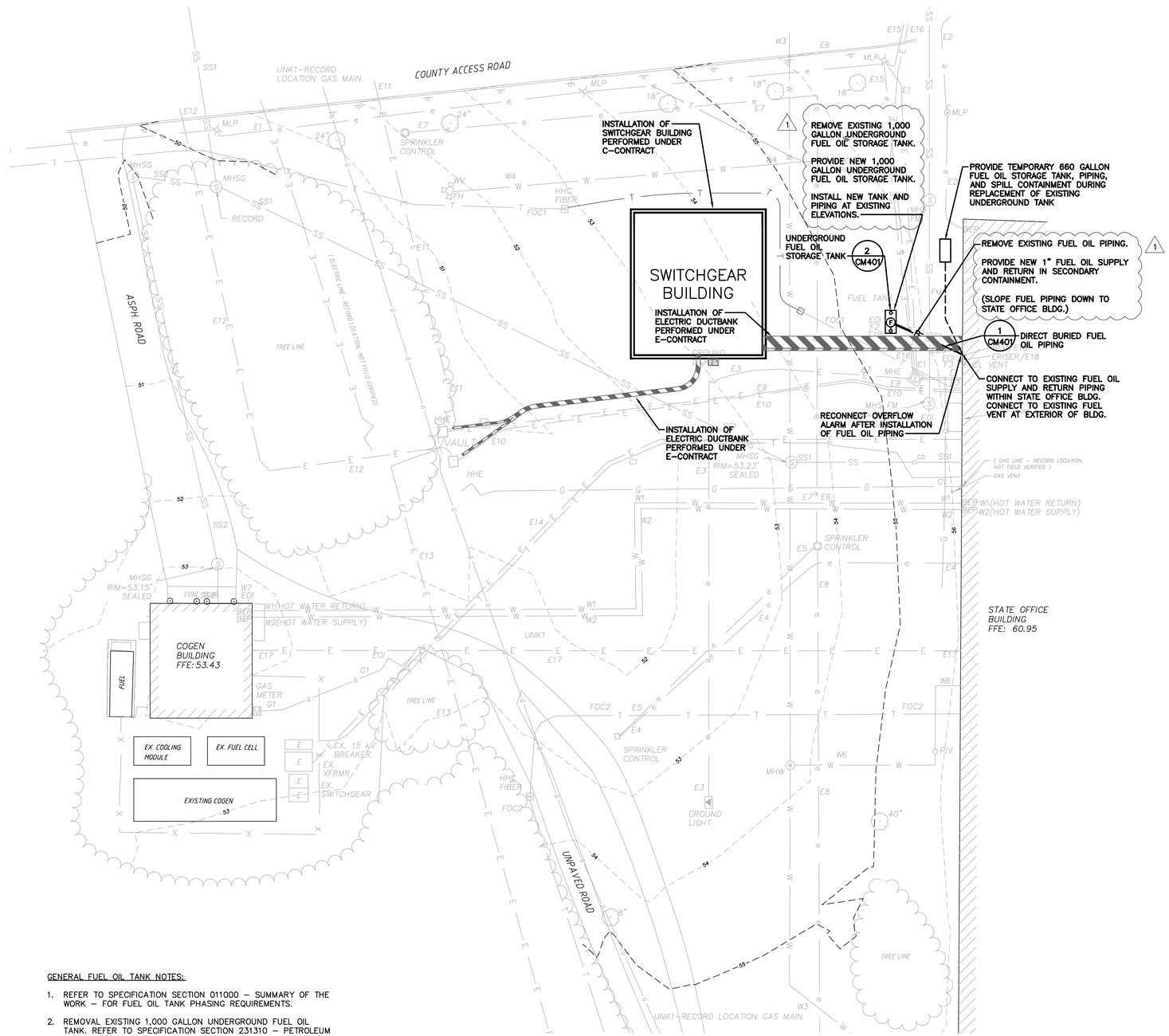

GENERAL FUEL OIL TANK NOTES:

1. REFER TO SPECIFICATION SECTION 011000 – SUMMARY OF THE WORK – FOR FUEL OIL TANK PHASING REQUIREMENTS.
2. REMOVAL EXISTING 1,000 GALLON UNDERGROUND FUEL OIL TANK. REFER TO SPECIFICATION SECTION 231310 – PETROLEUM TANK CLEANING AND INSPECTION, FOR STEPS TO BE TAKEN PRIOR TO THE REMOVAL OF THE UNDERGROUND STORAGE TANK.
3. (1) REFER TO SPECIFICATION SECTION 026500 FOR REMOVAL OF UNDERGROUND STORAGE TANK.
4. TEMPORARY FUEL OIL TANK (660 GALLONS) SHALL BE INSTALLED FOR THE ENTIRE DURATION OF UNDERGROUND FUEL OIL TANK REMOVAL AND INSTALLATION. PROVIDE DOUBLE WALL PIPING, HOSES, AND SPILL CONTAINMENT REQUIRED. COMPLY WITH OSHA, SUFFOLK COUNTY, AND NY DEC REGULATIONS.
5. COORDINATE TEMPORARY FUEL OIL TANK INSTALLATION, UNDERGROUND FUEL OIL TANK REMOVAL, AND UNDERGROUND FUEL OIL TANK INSTALLATION WITH OWNER. COORDINATE PHASING WITH OWNER PRIOR TO BEGINNING ALL FUEL OIL TANK WORK. NOTIFY OWNER AT LEAST ONE WEEK IN ADVANCE.

MECHANICAL SITE PLAN

SCALE: 1" = 20–0'

GRAPHIC SCALE
20 10 0 20 40
SCALE: 1"=20'–0"
UNIT OF MEASURE: FEET

REVISED DRAWING 8-9-2016

NYS OFFICE OF GENERAL SERVICES
Serving New York
ANDREW M. CUOMO
Governor
ROANN M. DESTITO
Commissioner

CONSULTANT

RMF ENGINEERING, P.C.
5520 RESEARCH PARK DR., SUITE 300
BALTIMORE, MD 21228

WARNING:
THE ALTERATION OF THIS MATERIAL IN ANY WAY, UNLESS DONE UNDER THE DIRECTION OF A COMPARABLE PROFESSIONAL, I.E. ARCHITECT FOR AN ARCHITECT, ENGINEER FOR AN ENGINEER OR LANDSCAPE ARCHITECT FOR A LANDSCAPE ARCHITECT, IS A VIOLATION OF THE NEW YORK STATE EDUCATION LAW AND/OR REGULATIONS AND IS A CLASS 'A' MISDEMEANOR.

STATE OF NEW YORK
JAMES KENYON BIGGS
LICENSED PROFESSIONAL ENGINEER
No. 091491

CONTRACT: HVAC
TITLE: REPLACE SWITCHGEAR
LOCATION: PERRY B. DURYEA STATE OFFICE BLDG. 250 VETERANS MEMORIAL HIGHWAY, HAUPPAUGE, NY 11788
CLIENT: NYS OFFICE OF GENERAL SERVICES

MARK	DATE	DESCRIPTION
1	8–24–2016	ADDENDUM NO. 3
	6–22–2016	FINAL SUBMISSION

PROJECT NUMBER:	44180–H
DESIGNED BY:	SRB
DRAWN BY:	SRB
FIELD CHECK:	SRB
APPROVED:	WAE

SHEET TITLE: MECHANICAL SITE PLAN

DRAWING NUMBER: CM-201

SHEET 2 OF 25