STATE OF NEW YORK
OFFICE OF GENERAL SERVICES
DESIGN AND CONSTRUCTION GROUP
THE GOVERNOR NELSON A. ROCKEFELLER
EMPIRE STATE PLAZA
ALBANY, NY 12242

ADDENDUM NO. 1 TO PROJECT NO. 44288

CONSTRUCTION WORK, HVAC WORK, PLUMBING WORK, ELECTRICAL WORK
REPAIR UNDERGROUND STEAM TUNNELS
WILLARD DRUG TREATMENT CENTER
7116 COUNTY ROUTE 132
WILLARD, NY

February 22, 2013

NOTE: This Addendum forms a part of the Contract Documents. Insert it in the Project Manual. Acknowledge receipt of this Addendum in the space provided on the Bid Form.

C, H, P and E DRAWINGS

1. Drawing number G-001 noted "REVISED DRAWING 2/22/2013" accompanies this Addendum and supersedes the same originally issued drawing.

CONSTRUCTION SPECIFICATIONS

1. DOCUMENT 000101 – Project Manual Cover Page: Change the Pre-Bid Site Visit Date to March 7, 2013.

2. DOCUMENT 000105: Replace DOCUMENT 000105 in the Project Manual with the accompanying document 000105, printed 2/19/2013 (1 page).

3. DOCUMENT 000110 TABLE OF CONTENTS:
   a. Add "DIVISION 09 FINISHES" under the FACILITY CONSTRUCTION SUBGROUP.
   b. Add "099101 Construction Painting" under "DIVISION 09 FINISHES" heading.

4. SECTION 028213: Replace SECTION 028213 in the Project Manual with the accompanying document 028213, printed 2/21/2013 (13 pages).

5. SECTION 099101 CONSTRUCTION PAINTING: Add the accompanying SECTION 099101, printed 2/21/2013 (8 pages) to the Project Manual.

CONSTRUCTION DRAWINGS

1. The following drawing numbers noted "REVISED DRAWING 2/22/2013" accompany this Addendum and supersede the same originally issued drawing:

G-002	S-102A	S-101D	S-502	S-509	S-519
G-003	S-103A	S-101G	S-503	S-513	S-520
G-101	S-106A	S-101H	S-504	S-514	S-602
G-102	S-112A	S-101M	S-505	S-515	
G-103	S-124A	S-101N	S-506	S-516	
H-101	S-129A	S-101P	S-507	S-517	
S-101A	S-101C'	S-501	S-508	S-518	

HVAC SPECIFICATIONS

1. DOCUMENT 000105: Replace DOCUMENT 000105 in the Project Manual with the accompanying document 000105, printed 2/19/2013 (1 page).

2. SECTION 230593: Replace SECTION 230593 in the Project Manual with the accompanying section 230593, printed 2/21/2013 (5 pages).

3. SECTION 230700: Replace SECTION 230700 in the Project Manual with the accompanying section 230700, printed 2/21/2013 (7 pages).

4. SECTION 232000: Replace SECTION 232000 in the Project Manual with the accompanying section 232000, printed 2/21/2013 (11 pages).

HVAC DRAWINGS

1. Drawing numbers M-101, M-102, M-103, and M-501noted "REVISED DRAWING 2/22/2013" accompany this Addendum and supersede the same originally issued drawing.

PLUMBING SPECIFICATIONS

1. DOCUMENT 000105: Replace DOCUMENT 000105 in the Project Manual with the accompanying document 000105, printed 2/19/2013 (1 page).

PLUMBING DRAWINGS

1. Drawing numbers P-101, P-102, P-103 and P-501 noted "REVISED DRAWING 2/22/2013" accompany this Addendum and supersede the same originally issued drawing.

ELECTRICAL SPECIFICATIONS

1. DOCUMENT 000105: Replace DOCUMENT 000105 in the Project Manual with the accompanying document 000105, printed 2/19/2013 (1 page).

ELECTRICAL DRAWINGS

1. No revisions.

END OF ADDENDUM

James Dirolf, P.E.
Director of Design

PROJECT NO.44288

CONSTRUCTION WORK

REPAIR UNDERGROUND STEAM TUNNELS
WILLARD DRUG TREATMENT CENTER
7116 COUNTY ROUTE 132
WILLARD, NY

PREPARED BY
Greenman-Pedersen, Inc.
80 Wolf Road
Suite 300
Albany, NY 12205

FEBRUARY 6, 2013

CLIENT: DIVISION OF CORRECTIONS AND COMMUNITY SUPERVISION

PROJECT TEAM LEADER: MICHAEL K. ERNST, P.E.

ASBESTOS PROJECT DESIGNER:

Kevin P. Janik, P.E.
NYSDOL Certification #96-05138

PREPARED FOR
State of New York
Office of General Services
35th Floor, Corning Tower
The Governor Nelson A. Rockefeller
Empire State Plaza
Albany, NY 12242
Phone (518) 474-0203
FAX (518) 473-7862

STATE OF NEW YORK
KEVIN P. JANIK
082957
LICENSED PROFESSIONAL ENGINEER

STATE OF NEW YORK
JOHN G. RIZZO, JR.
077511
LICENSED PROFESSIONAL ENGINEER

NOTE:....THE OFFICE OF GENERAL SERVICES REQUIRES GOOD FAITH EFFORTS ON THE PART OF ITS CONTRACTORS TO SOLICIT AND OBTAIN THE PARTICIPATION OF MINORITIES AND WOMEN AS SUBCONTRACTORS, AND EMPLOYEES IN ITS PROGRAMS.

PROJECT NO.44288-E

ELECTRICAL WORK

REPAIR UNDERGROUND STEAM TUNNELS
WILLARD DRUG TREATMENT CENTER
7116 COUNTY ROUTE 132
WILLARD, NY

FEBRUARY 6, 2013

CLIENT: DEPARTMENT OF CORRECTIONS AND COMMUNITY SUPERVISION

PROJECT TEAM LEADER: MICHAEL K. ERNST, P.E.

PREPARED BY
Greenman-Pedersen, Inc.
80 Wolf Road
Suite 300
Albany, NY 12205

PREPARED FOR
State of New York
Office of General Services
35th Floor, Corning Tower
The Governor Nelson A. Rockefeller
Empire State Plaza
Albany, NY 12242
Phone (518) 474-0203
FAX (518) 473-7862

STATE OF NEW YORK
JAMES EDWARD PRUGER SR.
080688-1
LICENSED PROFESSIONAL ENGINEER

2/6/13

NOTE:....THE OFFICE OF GENERAL SERVICES REQUIRES GOOD FAITH EFFORTS ON THE PART OF ITS CONTRACTORS TO SOLICIT AND OBTAIN THE PARTICIPATION OF MINORITIES AND WOMEN AS SUBCONTRACTORS, AND EMPLOYEES IN ITS PROGRAMS.

PROJECT NO.44288 - H

HVAC WORK

REPAIR UNDERGROUND STEAM TUNNELS
WILLARD DRUG TREATMENT CENTER
7116 COUNTY ROUTE 132
WILLARD, NY

PREPARED BY
Greenman-Pedersen, Inc.
80 Wolf Road
Suite 300
Albany, NY 12205

FEBRUARY 6, 2013

CLIENT: DEPARTMENT OF CORRECTIONS AND COMMUNITY SUPERVISION

PROJECT TEAM LEADER: MICHAEL K. ERNST, P.E.

PREPARED FOR
State of New York
Office of General Services
35th Floor, Corning Tower
The Governor Nelson A. Rockefeller
Empire State Plaza
Albany, NY 12242
Phone (518) 474-0203
FAX (518) 473-7862

STATE OF NEW YORK
STEPHEN CARL
082710
PROFESSIONAL ENGINEER

2/6/13

NOTE:....THE OFFICE OF GENERAL SERVICES REQUIRES GOOD FAITH EFFORTS ON THE PART OF ITS CONTRACTORS TO SOLICIT AND OBTAIN THE PARTICIPATION OF MINORITIES AND WOMEN AS SUBCONTRACTORS, AND EMPLOYEES IN ITS PROGRAMS.

PROJECT NO.44288 - P

PLUMBING WORK

REPAIR UNDERGROUND STEAM TUNNELS
WILLARD DRUG TREATMENT CENTER
7116 COUNTY ROUTE 132
WILLARD, NY

FEBRUARY 6, 2013

CLIENT: DEPARTMENT OF CORRECTIONS AND COMMUNITY SUPERVISION

PROJECT TEAM LEADER: MICHAEL K. ERNST, P.E.

PREPARED BY
Greenman-Pedersen, Inc.
80 Wolf Road
Suite 300
Albany, NY 12205

PREPARED FOR
State of New York
Office of General Services
35th Floor, Corning Tower
The Governor Nelson A. Rockefeller
Empire State Plaza
Albany, NY 12242
Phone (518) 474-0203
FAX (518) 473-7862

STATE OF NEW YORK
STEPHEN CARL DALLAS
082710
LICENSED PROFESSIONAL ENGINEER
2/6/13

NOTE:....THE OFFICE OF GENERAL SERVICES REQUIRES GOOD FAITH EFFORTS ON THE PART OF ITS CONTRACTORS TO SOLICIT AND OBTAIN THE PARTICIPATION OF MINORITIES AND WOMEN AS SUBCONTRACTORS, AND EMPLOYEES IN ITS PROGRAMS.

SECTION 028213

ASBESTOS ABATEMENT

1.01 SUMMARY

A. This Section specifies the procedures for disturbance and removal of existing asbestos-containing materials (ACM) and disposal of removed materials. The results of the testing for ACM are listed in the Pre-Renovation Survey for Asbestos-Containing Materials, Poly-Chlorinated Biphenyls in Caulk, Lead-Based Paint, and Microbial Contamination dated November 2011. Also see Document 003126.

1. The Building Asbestos Survey report was compiled by a licensed firm, utilizing an ELAP certified laboratory.
2. In order to determine asbestos content, samples were analyzed by polarized light microscopy (PLM) and/or transmission electron microscopy (TEM).
3. The report is intended for State Design and estimate purposes only, and is included to provide bidders with the same information available to the State.
4. The Bulk Samples are representative of like materials in the Work area. All ACM may not have been sampled.
5. ACM materials are indicated on Drawing H-101 and the Pre-Renovation Survey Report. Locations of access manholes and vaults providing access to the tunnel system are provided on Drawing H-101.

A. Vaults and Manholes

ACM-tar paper is present on the exterior of the tunnels. This material is likely to be encountered on the exterior of the access manholes and vault hatches. The contractor shall handle any tar paper on the exterior of manholes and vault hatches to be repaired or rebuilt as ACM material.

1) Contractor shall remove and properly dispose of ACM tar paper on the outside of designated manholes and vaults for their reconstruction. Designated manholes and vaults are to be excavated and exposed for reconstruction. Contractor shall excavate to expose the designated manholes and vaults to avoid damage. Designated manholes are MH7, MH15 and MH18. Designated vaults for riser reconstruction are MH22 and MH23.
2) Contractor shall remove and properly dispose of ACM tar paper at approximately one foot square areas on the outside of the tunnels at locations proposed for new sump pumps, steam line and electrical penetrations into the tunnel system. Contractor shall excavate to expose the tunnel walls to avoid damage. Locations are to be coordinated with Plumbing, HVAC and electrical contractors.

B. Steam Line Tunnels Interior

<u>Tunnel A</u>

1) 326 stanchions to be repaired. TSI to be removed at all 326 stanchions. Pipe diameters vary from 2 inch to 15 inch. Approximately 2,445 linear feet of pipe insulation will need to be abated.
2) Approximately 3,055 square feet of ACM-expansion joint tar paper is present on the tunnel expansion joint exterior at 176 joints. Contractor shall remove non-ACM joint filler board, tar and ACM tar paper at each expansion joint. The ACM tar paper occurs on the exterior of all tunnel expansion joints. The tunnel walls are approximately eight (8) inches thick. All removed expansion joint filler

board, tar and removed ACM tar paper shall be properly disposed of as ACM debris. Work must be done from inside of the tunnel.

3) Protect existing TSI on pipes not abated at designated areas for repair to the concrete tunnel joints, wall, ceiling and/or floors.

4) Approximately 20 linear feet ACM debris on the tunnel floor at the eastern terminus of Tunnel A at the junction of Tunnel P shall be removed and disposed of. After removal of the debris 30 feet of the tunnel floor shall be properly cleaned and decontaminated.

5) Three feet of TSI shall be removed from all piping at the eastern terminus of Tunnel A at the junction with Tunnel A' and Tunnel P to allow for tie-in for new piping.

6) Contractor shall make all necessary provisions to pump water from the eastern terminus of Tunnel A at the junction with Tunnel P. All necessary provisions shall be made to pump three (3) inches of water daily from the tunnel. Pumped water shall be discharged at storm water manholes as approved by the Director's representative, assuming a distance of approximately 500 feet from the tunnel access.

Tunnel B

1) No stanchions to be repaired. Thus no ACM-pipe insulation abatement for stanchion repair required.

2) Approximately 98 square feet of ACM-expansion joint tar paper is present on the tunnel expansion joint exterior at seven (7) joints. Contractor shall remove non-ACM joint filler board, tar and ACM tar paper at each expansion joint. The ACM tar paper occurs on the exterior of all tunnel expansion joints. The tunnel walls are approximately eight (8) inches thick. All removed expansion joint filler board, tar and removed ACM tar paper shall be properly disposed of as ACM debris. Work must be done from inside of the tunnel.

3) Protect existing TSI on pipes not abated at designated areas for repair to the concrete tunnel joints, wall, ceiling and/or floors.

Tunnel C

1) No stanchions to be repaired. Thus no ACM-pipe insulation abatement for stanchion repair required.

2) No ACM-expansion joint tar paper expansion joint abatement required.

3) No ACM pipe wrap is present in Tunnel C.

Tunnel C'

1) Tunnel C' shall be blocked off at the entrance to Tunnel A and at the west exit from Tunnel C' with the construction of hard wall isolation barriers. Contractor shall construct and plasticize the hard wall isolation barriers per Code Rule 56-7.11(b). The hard wall barriers shall be constructed of 3/8" thick pressure treated plywood or pressure treated oriented strand board with pressure treated wood stud framing. Studs shall be spaced 18 inches. The perimeter of the hard wall isolation barriers to the tunnel wall shall be sealed with non-toxic silicone caulk. An access hatch shall be incorporated into the eastern hard wall isolation barrier, at the junction with Tunnel A. The hard wall isolation barriers shall remain in place after completion of abatement work. Asbestos hazard warning signs shall be placed on each barrier.

2) All TSI on pipes in Tunnel C' shall be abated and disposed of as ACM debris. ACM TSI insulation is present on four pipes. Pipe diameters vary from two to eight inches. Approximately 960 linear feet of pipe insulation will require abatement from Tunnel C'. No stanchions proposed to be repaired in Tunnel C'.

3) No ACM-expansion joint tar paper expansion joint abatement required in Tunnel C'. Tunnel C' is constructed of set stone blocks with no expansion joints.
4) Approximately 20 linear feet ACM debris on the dirt floor to Tunnel C'. Contractor shall remove and dispose of approximately 20 linear feet ACM debris on the tunnel floor.
5) After the removal of all ACM debris from the floor of Tunnel C', remove two (2) inches of soil and dispose of as ACM debris. After removal of the ACM debris, two (2) inches of soil and all visual occurrence of ACM debris in the soil, two (2) layers of 6-mil poly sheeting shall be placed on the tunnel floor. The poly sheeting shall extend six inches up the sides of the tunnel wall and shall be affixed using non-toxic construction adhesive.

Tunnel D

1) 6 stanchions to be repaired. However, All ACM piping previously removed from Tunnel D. Thus no ACM-pipe insulation abatement required.
2) Approximately 98 square feet of ACM-expansion joint tar paper is present on the tunnel expansion joint exterior at seven (7) joints. Contractor shall remove non-ACM joint filler board, tar and ACM tar paper at each expansion joint. The ACM tar paper occurs on the exterior of all tunnel expansion joints. The tunnel walls are approximately eight (8) inches thick. All removed expansion joint filler board, tar and removed ACM tar paper shall be properly disposed of as ACM debris. Work must be done from inside of the tunnel.
3) Protect existing TSI on pipes not abated at designated areas for repair to the concrete tunnel joints, wall, ceiling and/or floors

Tunnel E (Previous Burial, No Work Required)

1) No ACM-pipe insulation abatement required.
2) No ACM-expansion joint tar paper expansion joint abatement required.

Tunnel F

1) TSI to be removed at 1 stanchion location to be repaired. Approximately 12 linear feet of ACM-black asphalt pipe wrap, friable white pipe insulation and ACM elbows, approximately 4 inch diameter**.**
2) Approximately 28 square feet of ACM-expansion joint tar paper is present on the tunnel expansion joint exterior at two (2) joints. Contractor shall remove non-ACM joint filler board, tar and ACM tar paper at each expansion joint. The ACM tar paper occurs on the exterior of all tunnel expansion joints. The tunnel walls are approximately eight (8) inches thick. All removed expansion joint filler board, tar and removed ACM tar paper shall be properly disposed of as ACM debris. Work must be done from inside of the tunnel.
3) Protect existing TSI on pipes not abated at designated areas for repair to the concrete tunnel joints, wall, ceiling and/or floors.

Tunnel G

1) TSI to be removed at 15 stanchions location to be repaired. Approximately 90 linear feet of ACM-black asphalt pipe wrap, friable white pipe insulation and ACM elbows, approximately 4 inch diameter.
2) Approximately 113 square feet of ACM-expansion joint tar paper is present on the tunnel expansion joint exterior at seven (7) joints. Contractor shall remove non-ACM joint filler board, tar and ACM tar paper at each expansion joint. The ACM tar paper occurs on the exterior of all tunnel expansion joints. The tunnel walls are approximately eight (8) inches thick. All removed expansion joint filler board, tar and removed ACM tar paper shall be properly disposed of as ACM debris. Work must be done from inside of the tunnel.

3) Protect existing TSI on pipes not abated at designated areas for repair to the concrete tunnel joints, wall, ceiling and/or floors.

Tunnel H

1) No stanchions to be repaired. Thus no ACM-pipe insulation abatement for stanchion repair required.
2) Approximately 141 square feet of ACM-expansion joint tar paper is present on the tunnel expansion joint exterior at ten (10) joints. Contractor shall remove non-ACM joint filler board, tar and ACM tar paper at each expansion joint. The ACM tar paper occurs on the exterior of all tunnel expansion joints. The tunnel walls are approximately eight (8) inches thick. All removed expansion joint filler board, tar and removed ACM tar paper shall be properly disposed of as ACM debris. Work must be done from inside of the tunnel.
3) Protect existing TSI on pipes not abated at designated areas for repair to the concrete tunnel joints, wall, ceiling and/or floors.

Tunnel I

1) Contractor shall remove and properly dispose of nine feet of existing TSI from each of five pipes in the space at the end of Tunnel I. The butt ends of the TSI shall be repaired with wettable cloth.
2) No stanchions to be repaired. Thus no ACM-pipe insulation abatement for stanchion repair required. Protect existing TSI on pipes.
3) Approximately 15 square feet of ACM-expansion joint tar paper is present on the tunnel expansion joint exterior at one (1) joint. Contractor shall remove non-ACM joint filler board, tar and ACM tar paper at each expansion joint. The ACM tar paper occurs on the exterior of all tunnel expansion joints. The tunnel walls are approximately eight (8) inches thick. All removed expansion joint filler board, tar and removed ACM tar paper shall be properly disposed of as ACM debris. Work must be done from inside of the tunnel.
4) No repair work to the concrete required in Tunnel I.
5) Protect existing TSI on pipes not abated at designated areas for repair to the concrete tunnel joints, wall, ceiling and/or floors

Tunnel J

1) No stanchions to be repaired. Thus no ACM-pipe insulation abatement for stanchion repair required.
2) Approximately 15 square feet of ACM-expansion joint tar paper is present on the tunnel expansion joint exterior at one (1) joint. Contractor shall remove non-ACM joint filler board, tar and ACM tar paper at each expansion joint. The ACM tar paper occurs on the exterior of all tunnel expansion joints. The tunnel walls are approximately eight (8) inches thick. All removed expansion joint filler board, tar and removed ACM tar paper shall be properly disposed of as ACM debris. Work must be done from inside of the tunnel.
3) Protect existing TSI on pipes not abated at designated areas for repair to the concrete tunnel joints, wall, ceiling and/or floors.

Tunnel K

1) TSI to be removed at 20 stanchions location to be repaired. Approximately 300 linear feet of ACM-black asphalt pipe wrap, friable white pipe insulation and ACM elbows, approximately 4 inch diameter to 10 inch diameter.
2) Approximately 141 square feet of ACM-expansion joint tar paper is present on the tunnel expansion joint exterior at three (3) joints. Contractor shall remove non-ACM joint filler board, tar and ACM tar paper at each expansion joint. The ACM tar paper occurs on the exterior of all tunnel expansion joints. The tunnel

walls are approximately eight (8) inches thick. All removed expansion joint filler board, tar and removed ACM tar paper shall be properly disposed of as ACM debris. Work must be done from inside of the tunnel.

3) Protect existing TSI on pipes not abated at designated areas for repair to the concrete tunnel joints, wall, ceiling and/or floors.

Tunnel L

1) TSI to be removed at 11 stanchions locations to be repaired. Approximately 165 linear feet of ACM-black asphalt pipe wrap, friable white pipe insulation and ACM elbows, approximately 4 inch diameter.
2) Approximately 96 square feet of ACM-expansion joint tar paper is present on the tunnel expansion joint exterior at two (2) joints. Contractor shall remove non-ACM joint filler board, tar and ACM tar paper at each expansion joint. The ACM tar paper occurs on the exterior of all tunnel expansion joints. The tunnel walls are approximately eight (8) inches thick. All removed expansion joint filler board, tar and removed ACM tar paper shall be properly disposed of as ACM debris. Work must be done from inside of the tunnel.
3) Protect existing TSI on pipes not abated at designated areas for repair to the concrete tunnel joints, wall, ceiling and/or floors.

Tunnel M

1) No stanchions to be repaired. Thus no ACM-pipe insulation abatement for stanchion repair required.
2) Approximately 15 square feet of ACM-expansion joint tar paper is present on the tunnel expansion joint exterior at one (1) joint. Contractor shall remove non-ACM joint filler board, tar and ACM tar paper at each expansion joint. The ACM tar paper occurs on the exterior of all tunnel expansion joints. The tunnel walls are approximately eight (8) inches thick. All removed expansion joint filler board, tar and removed ACM tar paper shall be properly disposed of as ACM debris. Work must be done from inside of the tunnel.
3) No repair work to the concrete required in Tunnel M.
4) Protect existing TSI on pipes not abated at designated areas for repair to the concrete tunnel joints, wall, ceiling and/or floors

Tunnel N

1) No stanchions to be repaired. Thus no ACM-pipe insulation abatement for stanchion repair required.
2) Approximately 56 square feet of ACM-expansion joint tar paper is present on the tunnel expansion joint exterior at four (4) joints. Contractor shall remove non-ACM joint filler board, tar and ACM tar paper at each expansion joint. The ACM tar paper occurs on the exterior of all tunnel expansion joints. The tunnel walls are approximately eight (8) inches thick. All removed expansion joint filler board, tar and removed ACM tar paper shall be properly disposed of as ACM debris. Work must be done from inside of the tunnel.
3) Protect TSI on pipes not abated at designated areas for repair to the concrete tunnel wall joints, ceiling and/or floors.

Tunnel O

1) TSI to be removed at 16 stanchion locations to be repaired. Approximately 144 linear feet of ACM-black asphalt pipe wrap, friable white pipe insulation and ACM elbows, varies from 2 inch to 4 inch in diameter.
2) Approximately 113 square feet of ACM-expansion joint tar paper is present on the tunnel expansion joint exterior at eight (8) joints. Contractor shall remove non-ACM joint filler board, tar and ACM tar paper at each expansion joint. The

ACM tar paper occurs on the exterior of all tunnel expansion joints. The tunnel walls are approximately eight (8) inches thick. All removed expansion joint filler board, tar and removed ACM tar paper shall be properly disposed of as ACM debris. Work must be done from inside of the tunnel.

3) Protect TSI on pipes not abated at designated areas for repair to the concrete tunnel wall, joints, ceiling and/or floors.
4) Clean and decontaminate entire tunnel area.
5) Contractor shall make all necessary provisions to pump water from Tunnel O. All necessary provisions shall be made to pump three (3) inches of water daily from the tunnel. Pumped water shall be discharged at storm water manholes as approved by the Director's representative, assuming a distance of approximately 500 feet from the tunnel access.

Tunnel O'

1) No stanchions to be repaired. Thus no ACM-pipe insulation abatement for stanchion repair required.
2) Approximately 184 square feet of ACM-expansion joint tar paper is present on the tunnel expansion joint exterior at 13 joints. Contractor shall remove non-ACM joint filler board, tar and ACM tar paper at each expansion joint. The ACM tar paper occurs on the exterior of all tunnel expansion joints. The tunnel walls are approximately eight (8) inches thick. All removed expansion joint filler board, tar and removed ACM tar paper shall be properly disposed of as ACM debris. Work must be done from inside of the tunnel.
3) Approximately 80 linear feet ACM debris on the tunnel floor shall be removed and properly disposed of.
4) Protect TSI on pipes not abated at designated areas for repair to the concrete tunnel wall joints, ceiling and/or floors.
5) Clean and decontaminate entire tunnel area.
6) Contractor shall make all necessary provisions to pump water from Tunnel O'. All necessary provisions shall be made to pump three (3) inches of water daily from the tunnel. Pumped water shall be discharged at storm water manholes as approved by the Director's representative, assuming a distance of approximately 500 feet from the tunnel access.

Tunnel P

1) TSI to be removed at 44 stanchion locations to be repaired. Approximately 264 linear feet of ACM-black asphalt pipe wrap, friable white pipe insulation and ACM elbows, 2 inch to 4 inch in diameter.
2) Approximately 342 square feet of ACM-expansion joint tar paper is present on the tunnel expansion joint exterior at 23 joints. Contractor shall remove non-ACM joint filler board, tar and ACM tar paper at each expansion joint. The ACM tar paper occurs on the exterior of all tunnel expansion joints. The tunnel walls are approximately eight (8) inches thick. All removed expansion joint filler board, tar and removed ACM tar paper shall be properly disposed of as ACM debris. Work must be done from inside of the tunnel.
3) Protect TSI on pipes not abated at designated areas for repair to the concrete tunnel joints, wall, ceiling and/or floors.

Tunnel A' (Clay Arch Section)

1) Remove and properly disposed of three feet of existing TSI on all pipes at tie-in location for new piping at the junction of Tunnel P and Tunnel A', and remove three feet of TSI on all pipes at the access manhole to Tunnel A' where a block wall will be constructed to abandon the tunnel. Removed TSI shall be disposed of as ACM debris.

2) Remove and properly dispose of existing asbestos TSI ground debris on the floor of service vaults at MH1, MH2, MH3, MH4, MH5 and MH6. After removal of debris properly clean accessible tunnel segments 10 feet past the occurrence of ACM debris. After completion of debris cleanup, contractor shall dispose of all porous, non-cleanable asbestos contaminated items.

B. Type of Asbestos Abatement Project:

1. Large Asbestos Abatement Project: An asbestos project involving the removal, disturbance, repair or handling of more than 160 square feet or 260 linear feet of ACM.

1.02 RELATED WORK SPECIFIED ELSEWHERE

A. Existing Hazardous Material Information: Document 003126.

B. Summary of the Work: Section 011000.

C. Construction Facilities and Temporary Controls: Section 015000.

D. Removals, Cutting, and Patching: Section 017329.

1.03 REFERENCES

A. New York State Department of Environmental Conservation (DEC) 6NYCRR:
1. Part 360 Solid Waste Management Facilities.
2. Part 364 Waste Transporter Permits.
3. Part 370 Hazardous Waste Management System-General.
4. Part 371 Identification and Listing of Hazardous Wastes.
5. Part 372 Hazardous Waste Manifest System and Related Standards for Generators, Transporters and Facilities.
6. Part 373 Hazardous Waste Management Facilities.

B. Occupational Safety and Health Administration (OSHA): Asbestos Regulations (29 CFR Part 1926.1101).

C. U.S. Environmental Protection Agency (USEPA):
1. National Emission Standards for Hazardous Air Pollutants; Asbestos NESHAP Revision; Final Rule.
2. Asbestos Emergency Response Act (AHERA) (40 CFR Part 763, Subpart E).

D. New York State Department of Labor (DOL): Industrial Code Rule 56.

1.04 DEFINITIONS

A. Authorized Personnel: Facility or the Director's Representative, and all other personnel who are authorized officials of any regulating agency, be it State, Local, Federal or Private entity who possess legal authority for enforcement or inspection of the work.

B. Clearance Criteria: Shall be determined and established by a Certified Asbestos Project Monitor with an independent testing lab employed by the Director's Representative, conforming to all standards set forth by all authorities having jurisdiction, mentioned in the references, and issue the certification of cleaning.

C. Site Specific Variance: Relief in accordance with section 30 of the Labor Law from specific sections of Industrial Code Rule 56 for a specific project.

D. Phase I & II: Asbestos Project phases as defined and subcategorized in ICR 56-2.

1.05 ABBREVIATIONS

A. ASTM: American Society for Testing and Materials
1916 Race Street
Philadelphia, PA 19103

B. CFR: Code of Federal Regulations
Government Printing Office
Washington, DC 20402

C. DOL: New York State Department of Labor
Harriman State Office Building Campus
Albany, NY 12240

D. NIOSH: National Institute for Occupational Safety and Health
Building J.N.E. Room 3007
Atlanta, GA 30333

E. OSHA: Occupational Safety and Health Administration
200 Constitution Avenue
Washington, DC 20210

F. USEPA: United States Environmental Protection Agency
401 M Street SW
Washington, DC 20460

1.06 ASBESTOS SITE SPECIFIC VARIANCE

A. If an additional site specific variance is sought, the application must be submitted by the contractor's NYS DOL Certified Asbestos Project Designer with 14 days after the Contract Agreement is approved by the Comptroller. Forward the required forms to the Department of Labor for their action.

1.07 SUBMITTALS

A. Asbestos Site Specific Variance Submittals; if an additional site specific variance is sought submit the following:
1. One copy of the completed DOSH-751 and DOSH-465 forms.
2. One copy of the New York State Department of Labor site specific variance decision.

B. Quality Control Submittals:
1. Notification Compliance Data: Within 2 days after notification is sent to the regulatory agencies submit one copy of each notice sent to each regulatory agency (USEPA and DOL).
2. Asbestos Removal Company Data: Name and address of proposed asbestos removal company and abatement contractor license issued by DOL.
3. Asbestos Worker Certification Data: Name and address of proposed asbestos abatement workers and licenses issued by DOL.
4. Work Plan: For information only, submit one copy of the work plan required under Quality Assurance Article.

5. Waste Transporter Permit: One copy of transporter's current waste transporter permit from NYS DEC (NYS Part 364 Permit).
6. Landfill: Landfill to be used for ACM disposal shall be licensed to receive asbestos waste by NYS DEC (NYS Part 360 Permit) and by USEPA. Out of state landfills shall provide licenses from local agencies having jurisdiction.
7. Negative Air Pressure Equipment: Copy of manufacturer's and performance data of all units and HEPA filters used.

C. Asbestos Work Closeout Submittals:
1. Waste Shipment Records and Disposal Site Receipts: Copy of waste shipment record and disposal site receipt showing that the ACM has been properly disposed.
a. Waste shipment record and disposal site receipt must be received within 35 days of the ACM waste leaving the Site. If receipts are not received within the specified time period, the Director's Representative will notify USEPA in writing within 45 days of the ACM waste leaving the Site.

D. Contract Closeout Submittals:
1. Daily Log: Submit copy of Project Monitor's daily air sample log and a copy of Asbestos Abatement Contractor's Daily project log.
2. Air Monitoring Data: Submit copy of air test results and chain of custody.

1.08 QUALITY ASSURANCE

A. Regulatory Requirements: Comply with the referenced standards.

B. Pre-Work Conference: Before the Work of this Section is scheduled to commence, a conference will be held by the Director's Representative at the Site for the purpose of reviewing the Contract Documents, discussing requirements for the Work, and reviewing the Work procedures.
1. The conference shall be attended by the Contractor, the asbestos removal subcontractor, and the testing laboratory employed by the Director.

C. Work Plan: At the conclusion of the pre-work conference, before the physical abatement Work begins, prepare a detailed work plan.
1. The work plan shall include, but not be limited to, work procedures, types of equipment, details of equipment used, decontamination unit locations, crew size, and emergency procedures for fire and medical emergencies and for failure of containment barriers.
2. If a site specific variance is sought, do not finalize the work plan until the Department of Labor decision is received.

1.09 PROJECT CONDITIONS

A. In addition to the postings required by law, post at the entrance to the abatement area the following documents:
1. Copy of the printed Work plan.
2. Copy of Industrial Code Rule 56.

B. Shut-down of Air Handling System: Complete the Work of this Section within the time limitation allowed for shut-down of the air handling system serving the work area.
1. The air handling system will not be restarted until approval of the air monitoring tests following the last cleaning.
2. If total shut down of the system is not acceptable, follow all regulations for local isolation and provision for temporary HVAC as per DOL regulations.

C. Maintain electric services to those portions of the building and remaining facility not a part of the asbestos abatement work area at all times. Follow all regulations for electric power shut down exemptions as per DOL regulations.

D. Do not obstruct any aisle or passageway so as to reduce its required width as an exit.

1.10 HEALTH AND SAFETY

A. Where in the performance of the work, workers, supervisory personnel or sub-contractors may encounter, disturb, or otherwise function in the immediate vicinity of contaminated items and materials, all personnel shall take appropriate continuous measures as necessary to protect all ancillary building occupants from the potential ACM exposure.
   1. Such measures shall include the procedures and methods described herein and shall be in compliance with all applicable regulations of Federal, State and Local agencies.

1.11 FIRE PROTECTION, EMERGENCY EGRESS AND SECURITY

A. Establish emergency and fire exits from the work area containment. Provide first aid kits and two full sets of protective clothing and respirators for use by qualified emergency personnel outside of the work area.

B. Provide a logbook throughout the entire term of the project. All persons who enter the regulated abatement work area or enclosure shall sign the logbook. Document any intrusion or incident in the log book.

1.12 PERSONAL PROTECTIVE CLOTHING AND EQUIPMENT

A. Workers must wear personal protective equipment for all projects as per OSHA and DOL regulations. Provide respiratory protection in accordance with OSHA regulation 1910.134 and ANSI Z88.2.

B. Workers must be trained as per OSHA and DOL requirements, have medical clearance and must have recently received pulmonary function test (PFT) and respirator fit tested by a trained professional.
   1. A personal air sampling program shall be in place as required by OSHA.
   2. The use of respirators must also follow a complete respiratory protection program as specified by OSHA.

PART 2 PRODUCTS

2.01 DISPOSAL BAGS

A. Type: Minimum 6 mil thick, black, and preprinted with a Caution Label.

2.02 EQUIPMENT

A. Temporary lighting, heating, hot water heating units, ground fault interrupters, and all other equipment on site shall be UL listed.

B. All electrical equipment shall be in compliance with the National Electric Code, Article 305 - Temporary Wiring.

2.04 GLOVE BAGS

A. Type: Minimum 6 mil thick, clear, fire retardant polyethylene. Select glove bag sizes appropriate for the size and location of the project.

2.05 NEGATIVE AIR PRESSURE UNITS

A. Type: Local exhaust system, capable of maintaining negative air pressure within the containment, and provides for HEPA filtration of efficiency not less than 99.97 percent with 0.3 micron particles. Equip the unit with filter alarms lights and operation time meter.

2.06 PLASTIC SHEETS

A. Type: Minimum 6 mil thick, clear, fire retardant polyethylene.

2.07 RESPIRATORS

A. Type: As approved by the Mine Safety and Health Administration (MSHA), Department of Labor, or the National Institute for Occupational Safety and Health (NIOSH), Department of Health and Human Services.

2.08 VACUUM CLEANERS

A. Type: Vacuums equipped with HEPA filters.

PART 3 EXECUTION

3.01 ASBESTOS-CONTAINING MATERIAL HANDLING AND REMOVAL PROCEDURES

A. Comply with the standards referenced in Part 1 of this Section.

3.02 CLEAN UP PROCEDURES

A. Comply with the standards referenced in Part 1 of this Section.

3.03 PROJECT AIR SAMPLING, MONITORING AND ANALYSIS

A. Air Sampling and Analysis: The Director will employ the services of an independent testing laboratory to perform air sample monitoring. The laboratory shall use the methods described in standards referenced in Part 1 of this Section.
   1. The equipment, duration, flow rate, calibration of equipment, number and location of samples are as per ICR 56-4.
   2. Air sampling technician shall be on site to observe and maintain air sampling equipment for the duration of the air sampling collection.
   3. Period of time permitted between completion of air sample collection and receipt of results on the project site shall be equal or less than 48 hours.

B. If air samples collected outside the regulated work area indicate airborne fiber concentrations at or above 0.01 fibers per cubic centimeter, or the established background level, which ever is greater, work shall stop immediately for inspection of barriers and negative air ventilation systems. Clean up surfaces outside the regulated work area using HEPA filter equipped vacuums and wet cleaning methods. Work methods shall be altered to reduce fiber concentrations to acceptable levels.

C. Elevated air sample results, if any, along with background and all other air sample results collected during Phase IIA through Phase IIC shall be submitted to the Commissioner of appropriate Asbestos Control Bureau within the same business day of receipt of results.

3.04 FINAL CLEANING AND CLEARANCE PROCEDURES

A. Negative Pressure Ventilation: Negative air pressure machines if used, shall remain in continuous operation during the entire length of the project.

B. Cleaning and Visual Inspection: After first, second, third cleaning and required waiting/settling and drying periods, perform a final visual inspection.
   1. Final clearance air sampling shall commence after the waiting/settling and drying time as per ICR 56 has elapsed.

C. Project Monitor Visual Inspection: The Director will employ the services of a DOL certified asbestos project monitor employed by an independent testing laboratory to perform visual inspection as required by ICR 56.

D. Final Clearance Air Sampling: The Director will employ the services of an independent testing laboratory to perform final air sampling.
   1. The laboratory shall use the methods described in standards referenced in Part 1 of this Section.
   2. The equipment, duration, flow rate, calibration of equipment, number and location of samples are as per ICR 56-4.
   3. If initial Post-Abatement (Clearance Air) Monitoring results do not comply with the standards referenced in Part 1 of this Section the Contractor shall either re-clean or order a full set of TEM analysis.
      a. Results of the TEM analysis will be conclusive, and if the results do not comply with the standards referenced in Part 1 of this Section, the Contractor shall re-clean and additional full set of air samples will be collected and analyzed until the standards are met.
      b. All satisfactory PCM clearance air sample results along with background air sample results, if they are greater than or equal to 0.01 fibers per cubic centimeter, shall be submitted to the Commissioner of appropriate Asbestos Control Bureau within two business days of receipt of satisfactory clearance air results.
      c. All satisfactory TEM results of previously unsatisfactory PCM clearance air sample results, along with the unsatisfactory PCM results shall be submitted to the Commissioner of appropriate Asbestos Control Bureau within two business days of receipt of satisfactory clearance air results.
   4. Prior to removal of isolation barriers the Director's Representative at the site will receive an affidavit from the air monitoring laboratory certifying the final air samples comply with the standards referenced in Part 1 of this Section.

E. Dismantling of Regulated Abatement Work Area:
   1. Remove all tools and equipment after proper decontamination as per Part 1 of this section.
   2. Dismantle and remove each tent enclosure and air lock and any barriers only after final clearance air monitoring has been performed and satisfactory results obtained.
   3. All remaining polyethylene, duct tape, expandable foam and other barrier materials shall be bagged, wrapped, containerized and labeled as asbestos waste.
   4. Remove all temporary hard walled barriers from site.

5. Dismantle any remote decontamination units and plastic sheeting shall be disposed as asbestos waste.
6. Remove all waste generated to the holding area, lockable trailer or dumpster.
7. Contractor's Supervisor shall certify in writing to the Director that abatement work is complete and no debris/residue remains.

3.05 DISPOSAL OF ASBESTOS-CONTAINING MATERIAL AND RELATED DEBRIS

A. Remove all waste generated as part of the asbestos project from the project site within ten calendar days from the site after completion of Phase IIC of the project or within one day of the waste disposal container/trailer becomes full, whichever occurs first.

B. Transport and dispose of all the asbestos-containing waste, related debris, and waste water to the approved disposal site.

C. All generated waste removed from the site must be documented, accounted for and disposed of in compliance with the requirements of USEPA NESHAP.

D. Comply also with the standards referenced in Part 1 of this Section.

3.06 RESTORATION

A. Remove temporary decontamination facilities and restore area designated for these facilities to its original condition or better.

B. Where existing work is damaged or contaminated, restore work to its original condition or better.

END OF SECTION

SECTION 099101

CONSTRUCTION PAINTING

PART 1 GENERAL

1.01 DEFINITIONS

A. The word "paint" in this Section refers to substrate cleaners, fillers, sealers, primers, undercoats, enamels, stains, varnishes and other first, intermediate, last or finish coatings.

B. The word "primer" in this Section refers to substrate cleaners, fillers, sealers, undercoats, and other first or intermediate coats beneath the last or finish coating.

C. The words "finish paint" in this Section refers to the last or final coat and previous coats of the same material or product directly beneath the last or final coat.

D. Finish Paint Systems: Finish paint and primers applied over the same substrate shall be considered a paint system of products manufactured or recommended by the finish coat manufacturer.
   1. Finish paint products shall meet or exceed specified minimum physical properties.

1.02 SUBMITTALS

A. Painting Schedule: Cross-referenced Painting Schedule listing all exterior and interior substrates to be painted and specified finish paint type designation; product name and manufacturer, recommended primers and product numbers, and finish paint color designation for each substrate to be painted.
   1. Designate exterior substrates by building name and number, substrate to be painted and surface location.
   2. Designate interior substrates by building name and number, floor, room name and number, and surface to be painted.

B. Product Data Sheets: Manufacturer's published product data sheets describing the following for each finish paint product to be applied:
   1. Percent solids by weight and volume, solvent, vehicle, weight per gallon, ASTM D 523 gloss/reflectance angle, recommended wet and dry film thickness, volatile organic compound (VOC) content in lbs/gallon, product use limitations and environmental restrictions, substrate surface preparation methods, directions and precautions for mixing and thinning, recommended application methods, square foot area coverage per gallon, storage instructions, and shelf-life expiration date.
   2. Manufacturer's recommended primer for each finish paint product and substrate to be painted.
   3. Manufacturer's complete range of available colors for each finish paint product to be applied.

C. Finish Paint Samples: Two finish paint samples applied over recommended primers for each substrate to be painted.
   1. Samples shall be in the designated color and specified ASTM D 523 reflectance.
   2. Label each sample with the following information:
      a. Project number and Painting Schedule designation describing substrate location represented by the sample.
      b. Finish paint and primer manufacturer, product names and numbers, finish paint color and reflectance.
   3. Leave a 1 inch wide exposed strip of unpainted substrate, primer, intermediate coatings, and finish paint specified.
   4. Sample Sizes:
      a. Bar and Tubular Metals: 8 inch long bars or tubular stock.

D. Quality Control Submittals:
   1. Test Reports:, Furnish certified test results from an independent testing laboratory showing that products submitted comply with the specifications, if requested by the Director's Representative.
   2. Certificates: Furnish certificates of compliance required under QUALITY ASSURANCE Article.

1.03 QUALITY ASSURANCE

A. Volatile Organic Compounds (VOCs) Regulatory Requirements: Chapter III of Title 6 of the official compilation of Codes, Rules and Regulations of the State of New York (Title 6 NYCRR), Part 205 Architectural Surface Coatings.
   1. Certificate of Compliance: List of each paint product to be delivered and installed. List shall include written certification stating that each paint product listed complies with the VOC regulatory requirements in effect at the time of job site delivery and installation.

B. Container Labels: Label each product container with paint manufacturer's name, product name and number, color name and number, thinning and application instructions, date of manufacture and shelf-life expiration, required surface preparation, recommended coverage per gallon, wet and dry film thickness, drying time, and clean up procedures.

C. Compatibility of Paint Materials: Primers and intermediate paints shall be products manufactured or recommended by the finish paint manufacturer.

D. Performance Criteria:
   1. The following criteria are REQUIRED for products included in this section:
      a. Paints and coatings manufactured within 500 miles (by air) of the project site shall be documented in accordance with Submittal Requirements of Item 1.03.F.
      b. Architectural paints and coatings applied to interior walls and ceilings must not exceed the volatile organic compound (VOC) content limits established in Green Seal Standard GS-11, Paints.

c. Anti-corrosive and anti-rust paints applied to interior ferrous metal substrates must not exceed the VOC content limit established in Green Seal Standard GC-03, AntiCorrosive Paints.

d. Clear wood finishes, floor coatings, stains, primers, and shellacs applied to interior elements must not exceed the VOC content limits established in South Coast Air Quality Management District (SCAQMD) Rule 1113, Architectural Coatings.

2. Volatile Organic Compounds: The VOC concentrations (in grams per liter) of the product shall not exceed those listed below as determined by U. S. Environmental Protection Agency (EPA) Reference Test Method 24 and the standards referenced in 1.04.E.1.

a. Interior Paints and Coatings:

1. Non-flat: 150
2. Flat: 50

b. Anti-Corrosive Paints (if used in interior applications):

1. Gloss: 250
2. Semi-gloss: 250
3. Flat: 250

c. Exclude water and tinting color added at the point of sale in the calculation of VOC concentrations.

3. Chemical Component Limitations: Aromatic Compounds: the product must contain no more than 1.0% by weight of the sum total of aromatic compounds. Testing for the concentration of these compounds will be performed if they are determined to be present in the product during a materials audit.

4. Chemical Component Limitations, Other Chemicals: The manufacturer shall demonstrate that the following chemical compounds are not used as ingredients in the manufacture of the product:

a. Halomethanes: Methylene chloride.

b. Chlorinated ethanes: 1,1,1-trichloroethane.

c. Aromatic solvents: benzene, toluene (methylbenzene), ethylbenzene.

d. Chlorinated ethylenes: Vinyl chloride.

e. Polynuclear aromatics: Naphthalene.

f. Chlorobenzenes: 1,2-dichlorobenzene.

g. Phthalate esters: Di (2-ethylhexyl) phthalate, butyl benzyl phthalate, di-n-butyl phthalate, di-n-octyl phthalate, diethyl phthalate, dimethyl phthalate.

h. Miscellaneous semi-volatile organics: Isophorone.

i. Metals and their compounds: antimony, cadmium, hexavalent chromium, lead, mercury

j. Preservatives (antifouling agents): formaldehyde

k. Ketones: methyl ethyl ketone, methyl isobutyl ketone

l. Miscellaneous volatile organics: acrolein, acrylonitrile

1.04 DELIVERY, STORAGE, AND HANDLING

A. Delivery: Deliver materials to the Site in original, unopened containers and cartons bearing manufacturer's printed labels. Do not deliver products which have exceeded their shelf life, are in open or damaged containers or cartons, or are not properly labeled as specified.

B. Storage and Handling: Store products in a dry, well ventilated area in accordance with manufacturer's published product data sheets. Storage location shall have an ambient air temperature between 45 degrees F and 90 degrees F.

1.05 PROJECT CONDITIONS

A. Environmental Requirements:
   1. Ambient Air Temperature, Relative Humidity, Ventilation, and Surface Temperature: Comply with paint manufacturer's published product data sheet or other printed product instructions.
   2. If paint manufacturer does not provide environmental requirements, use the following:
      a. Ambient Air Temperature: Between 45 degrees F and 75 degrees F.
      b. Relative Humidity: Below 75 percent.
      c. Ventilation: Maintain the painting environment free from fumes and odors throughout the Work of this Section.
      d. Surface Temperature: At least 5 degrees F above the surface dewpoint temperature.
   3. Maintain environmental requirements throughout the drying period.

B. The following items are not to be painted unless otherwise specified, noted or directed:
   1. Factory prefinished items.

PART 2 PRODUCTS

2.01 PAINT MANUFACTURERS

A. Where noted, the following finish paint manufacturers produce the paint types specified.
   1. Benjamin Moore and Co., 51 Chestnut Ridge Rd., Montvale, NJ 07645, (201) 573-9600.
   2. ICI Dulux Paints, 4000 Dupont Cr., Louisville, KY 40207, (800) 984-5444.
   3. Sherwin-Williams Co., Cleveland, OH 44101, (800) 321-8194.

2.02 PAINT PRODUCTS

A. Cleaning Solvents: Low toxicity with flash point in excess of 100 degrees F.

B. Color Pigments: Pure, nonfading, finely ground pigments with at least 99 percent passing a 325 mesh sieve.
   1. Use lime-proof color pigments on masonry, concrete and plaster.
   2. Use exterior pigments in exterior paints.

C. Mineral Spirits: Low odor type recommended by finish paint manufacturer.

D. Turpentine: ASTM D 13.

2.03 FINISH PAINT TYPES

A. Physical Properties:
   1. Specified percent solids by weight and volume, pigment by weight, wet and dry film thickness per coat, and weight per gallon are minimum physical properties of acceptable materials.
      a. Opaque Pigmented Paints: Physical properties specified are for white titanium dioxide base before color pigments are added.
      b. Specified minimum wet and dry film thickness per coat are for determining acceptable finish paint products. Minimum wet and dry film thickness per coat to be applied shall comply with approved finish paint manufacturer's product data sheets.
   2. Gloss or Reflectance: The following ASTM D 523 specified light levels and angles of reflectance:
      a. Flat: Below 15 at 85 degrees.
      b. Eggshell: Between 5 and 20 at 60 degrees.
      c. Satin: Between 15 and 35 at 60 degrees.
      d. Semigloss: Between 30 and 65 at 60 degrees.
      e. Gloss: Over 65 at 60 degrees.

B. High Performance Paint Types:
   1. Paint Type AU: Aliphatic Urethane, Gloss Finish.
      a. Solids by Volume, Mixed: 48.0 percent.
      b. Weight Per Gallon: 8.0 lbs.
      c. Wet Film Thickness: 3.6 mils.
      d. Dry Film Thickness: 1.3 mils.
      e. Manufacturers: Benjamin Moore, ICI Dulux Paints, Sherwin-Williams.

C. Colors: Provide paint colors either shown on contract drawings or to be selected by the Director from finish paint manufacturers available color selections.
   1. Approved finish paint manufacturers to match designated colors of other manufacturers where colors have been shown on the contract documents.
   2. Safety Colors: Industry Standard ANSI Safety Colors.

PART 3 EXECUTION

3.01 EXAMINATION

A. Examine surfaces to be prepared, primed, or painted for compliance with contract documents, required environmental conditions, manufacturer's product data sheets, product label instructions and other written requirements.

1. Do not begin any phase of the work without first checking and verifying that surfaces and environmental conditions are acceptable for such work and that any earlier phase deficiencies and discrepancies have been properly corrected.
   a. The commencement of new work shall be interpreted to mean acceptance of surfaces to be affected.

3.02 PREPARATION

A. Protection: Cover and protect both surfaces to be painted and adjacent surfaces not to be painted from existing paint removals, airborne sanding particles, cleaning fluids and paint spills using suitable drop cloths, barriers and other protective devices.

1. Adjacent exterior surface protections include roofs, walls, landscaping, driveways and walkways. Interior protections include floors, walls, furniture, furnishings and electronic equipment.
2. Remove and replace removable hardware, lighting fixtures, telephone equipment, other devices and cover plates over concealed openings in substrates to be painted.
   a. Cover and neatly mask permanently installed hardware, lighting fixtures, cover plates and other devices which cannot be removed and are not scheduled for painting.
3. Schedule and coordinate surface preparations so as not to interfere with work of other trades or allow airborne sanding dust particle to fall on freshly painted surfaces.
4. Provide adequate natural or mechanical ventilation to allow surfaces to be prepared and painted in accordance with product manufacturer's instructions and applicable regulations.
5. Provide and maintain "Wet Paint" signs, temporary barriers and other protective devices necessary to protect prepared and freshly painted surfaces from damages until Work has been accepted.

B. Clean and prepare surfaces to be painted in accordance with specifications, paint manufacturer's approved product data sheets and printed label instructions. In the event of conflicting instructions or directions, the more stringent requirements shall apply.

1. Cleaners: Use only approved products manufactured or recommended by finish paint manufacturer. Unless otherwise recommended by cleaner manufacturer, thoroughly rinse with clean water to remove surface contaminants and cleaner residue

C. Surfaces:

1. Existing Structural Steel, Metal Decks and Stairs:

a. Prepare existing steel to be painted by cleaning in accordance with Structural Steel Painting Council (SSPC) standards:
   1) SSPC-SP6: Remove all visible rust, mill scale, paint, and foreign matter by commercial blast cleaning until at least two-thirds of each element of the surface is free of all visible residues.
b. Inspect for exposed or rusted steel reinforcement and contact Director's representative for an on-site survey of repairs to made before painting. Do not paint over exposed steel reinforcement without first repairing both deteriorated reinforcement and protective concrete covering.

2. Other Substrates: See finish paint manufacturer's recommendations.

D. Painting Material Preparations:
1. Prepare painting materials in accordance with manufacturer's approved product data sheets and printed label instructions.
   a. Stir materials before and during application for a consistent mixture of density. Remove container surface paint films before stirring and mixing.
   b. Slightly tint first opaque finish coat where primer and finish coats are the same color.
   c. Do not thin paints unless allowed and directed to do so in writing within limits stated on approved product data sheets.

3.03 APPLICATION

A. Environmental Conditions:
1. Water-based Paints: Apply when surface temperatures will be 50 degrees Fahrenheit to 90 degrees Fahrenheit throughout the drying period.
2. Other Paints: Apply when surface temperatures will be 45 degrees Fahrenheit to 95 degrees Fahrenheit throughout the drying period.
3. Apply exterior paints during daylight hours free from rain, snow, fog and mist when ambient air conditions are more than 5 degrees above the surface dewpoint temperature and relative humidity less than 85 percent.
   a. When exterior painting is allowed or required during nondaylight hours, provide portable outdoor weather recording station with constant printout showing hourly to diurnal air temperature, humidity, and dewpoint temperature.
4. Exterior Cold Weather Protection: Provide heated enclosures necessary to maintain specified temperature and relative humidity conditions during paint application and drying periods.

B. Install approved paints where specified, or shown on the drawings, and to match approved field examples.
1. Paint Applicators: Brushes, rollers or spray equipment recommended by the paint manufacturer and appropriate for the location and surface area to be painted.
   a. Approved minimum wet and dry film thicknesses shall be the same for different application methods and substrates.

C. Paint Type Coats To Be Applied: Unless specified otherwise by finish paint manufacturer's product data sheet, the number of coats to be applied for each paint type are as follows:

1. Paint Type AU: Apply in accordance with paint manufacturer's product data sheet and printed label instructions.

3.04 FIELD QUALITY CONTROL

A. Paint Samples: Assist the Director's Representative in obtaining random one quart paint samples for testing at any time during the Work.

1. Notify the Director's Representative upon delivery of paints to the Site.
2. Furnish new one quart metal paint containers with tight fitting lids and suitable labels for marking.
   a. Furnish labor to thoroughly mix paint before sampling and provide assistance with sampling when required.

3.05 ADJUSTING AND CLEANING

A. Reinstall removed items after painting has been completed.

1. Restore damaged items to a condition equal to or better than when removed. Replace damaged items that cannot be restored.

B. Touch up and restore damaged finish paints. Touch up and restoration paint coats are in addition to the number of specified finish paint coats.

C. Remove spilled, splashed, or spattered paint without marring, staining or damaging the surface. Restore damaged surfaces to the satisfaction of the Director's representative.

D. Remove temporary barriers, masking tape, and other protective coverings upon completion of painting, cleaning and restoration work.

END OF SECTION

SECTION 230593

CLEANING AND TESTING

PART 1 GENERAL

1.01 RELATED WORK SPECIFIED ELSEWHERE

A. Balancing of Systems: Section 230594.

1.02 SUBMITTALS

A. Quality Control Submittals

1. Test Reports (Field Tests):

a. Low Pressure Steam or Hot Water Heating Boilers: Submit test results on Boiler Test Record, Form BDC-360, a sample of which can be obtained from the Director's Representative, or a similar test report form, which includes the data shown on Form BDC-360.

1.03 QUALITY ASSURANCE

A. Regulatory Requirements:

1. Perform factory testing of factory fabricated equipment in complete accordance with the agencies having jurisdiction.

2. Perform field testing of piping systems in complete accordance with the local utilities and other agencies having jurisdiction and as specified.

1.04 PROJECT CONDITIONS

A. Protection: During test Work, protect controls, gages and accessories which are not designed to withstand test pressures. Do not utilize permanently installed gages for field testing of systems.

1.05 SEQUENCING AND SCHEDULING

A. Transmit written notification of proposed date and time of operational tests to the Director's Representative at least 5 days in advance of such tests.

B. Perform cleaning and testing Work in the presence of the Director's Representative.

C. Pressure test piping systems inside buildings, at the roughing-in stage of installation, before piping is enclosed by construction Work, and at other times as directed. Perform test operations in sections as required and directed, to

progress the Work in a satisfactory manner and not delay the general construction of the building. Valve or cap-off sections of piping to be tested, utilizing valves required to be installed in the permanent piping systems, or temporary valves or caps as required to perform the Work.

PART 2 PRODUCTS

2.01 MATERIALS

A. Test Equipment and Instruments: Type and kind as required for the particular system under test.

B. Test Media (air, gas, refrigerant, dry nitrogen, vacuum, water): As specified for the particular piping or system under test.

C. Cleaning Agent (chemical solution, steam, water): As specified for the particular piping, apparatus or system being cleaned.

PART 3 EXECUTION

3.01 PRELIMINARY WORK

A. Thoroughly clean pipe and tubing prior to installation. During installation, prevent foreign matter from entering systems. Prevent if possible and remove stoppages or obstructions from piping and systems.

3.02 PRESSURE TESTING OF PIPING

A. Piping shall be tight under test and shall not show loss in pressure or visible leaks, during test operations or after the minimum duration of time as specified. Remove piping which is not tight under test; remake joints and repeat test until no leaks occur.

B. General:

1. Pressure test piping systems inside buildings, at the roughing-in stage of installation, before piping is enclosed by construction Work, and at other times as directed.

2. Perform test operations in sections as required and directed, to progress the Work in a satisfactory manner and not delay the general construction of the building.

3. Valve or cap-off sections of piping to be tested, utilizing valves required to be installed in the permanent piping systems, or temporary valves or caps as required to perform the Work.

4. Isolate existing piping from pressure testing.

5. Pressure test only new piping unless otherwise specified or directed by Director's Representative.

C. Steam, Condensate Return and Pump Discharge Piping: Before final connections are made perform hydrostatic test at 1-1/2 times maximum working pressure, but not less than 150 psig for one hour.

3.03 PRESSURE TESTING OF POWER HOUSE PIPING

A. Hydrostatically test all non boiler external piping in accordance with Paragraph 137 of the ASME B31.1 Power Piping Code.

B. General:

1. Provide temporary equipment for testing, including pump and gages.

2. Test gage shall be accurate to within 3 psig and shall be calibrated within six months of the test as recorded on a sticker on the gage.

3. Test piping system before insulation is installed.

4. Perform pressure testing following the completion of postweld heat treatment, nondestructive examinations, and all other fabrication, assembly, and erection activities required to the provide the system or portions thereof subjected to the pressure test with pressure retaining capability.

5. Remove control devices before testing.

6. Test each natural section of each piping system independently but do not use piping system valves to isolate sections where test pressure exceeds valve pressure rating.

7. Fill each section with water and pressurize for indicated pressure and time.

8. Provide air vents at all high points in the system to purge air pockets while the system is filling.

C. Test Pressure:

1. The hydrostatic test pressure shall be as defined in Paragraph 137 of the ASME B31.1 Power Piping Code. If in doubt, refer to the Director's Representative.

2. Continuously maintain the test pressure for a minimum time of 2 hours. During this 2 hour period, no pressure drop shall be measured.

3. After the 2 hour period, if necessary, reduce the pressure to design pressure, and hold for such time as may be necessary to continue to conduct examinations for leakage.

4. Make examinations for leakage on all joints and connections.

5. The piping system shall show no visual evidence of weeping or leaking.

6. Hydrostatic testing shall be witnessed by the Director's Representative.

7. Repeat tests after any leaks are found, and then corrected.

D. Test Blinds:

1. Provide test blinds in any part of the piping when required during the field testing of piping.

2. Equip test blinds with a long handle.

3. Submit a written description of the location of test blinds before testing.

4. Remove all test blinds after testing.

E. Repair piping systems sections which fail required piping test, by disassembly and re-installation, using new materials to extent required to overcome leakage.

1. Do not use chemicals, stop-leak compounds, mastics, or other temporary repair methods.

F. Records:

1. Maintain accurate, updated records of all hydrostatic testing.

a. Submit a final log of all hydrostatic testing for the Director's Representative's records.

2. Maintain a constantly updated listed of the following for all hydrostatic tests:

a. Date and time of test.
b. Hydrostatic test pressure.
c. Piping system tested.
d. Extent of piping system tested so that it can be clearly identified up to what point a piping system has been tested.
e. Test results. All failures shall be indicated with the cause explicitly stated.
f. The Director's Representative and the Contractor shall witnesses each test.

3.04 TESTING OF EQUIPMENT, APPARATUS AND APPURTENANCES

A. Low Pressure Steam Boilers: Perform hydrostatic test at l5 psig after installation with all piping connections shut-off.

B. Relief Valves: Increase pressure in equipment or apparatus to relief valve setting, to test opening of valves at required relief pressures.

3.05 HEATING, VENTILATING AND AIR CONDITIONING SYSTEMS - CLEANING AND OPERATIONAL TESTING

A. Steam Heating Systems:

1. Cleaning:

   a. Upon completion of pressure test(s), place the system in automatic operation, at a minimum 15 psig steam pressure unless otherwise directed by the Director's Representative.
   b. Maintain this pressure for a minimum of 4 hours to remove dirt, sludge and foreign substances from the system.
   c. During this time waste the condensate. Provide temporary piping to transport to transport condensate to blowdown tank.
   d. Allow condensate to cool below 140 degrees F before wasting into sanitary drains.
   e. Periodically blow down strainers during cleaning operations and totally clean strainers and trap elements at end of blow down.
   f. Do not flush.

2. Operational Test:

   a. Run system in an automatic mode for a minimum of 120 consecutive hours, with final connections made to apparatus, equipment and accessories.
   b. Make final adjustments.

END OF SECTION

SECTION 230700

PIPING INSULATION

PART 1 GENERAL

1.01 RELATED WORK SPECIFIED ELSEWHERE

A. Through Penetration Firestops: Section 078400.

B. Painting: Section 099103.

C. Pipe Hangers and Supports: Section 230529.

1.02 ABBREVIATIONS

A. FS: Federal Specification.

B. K: Thermal Conductivity, i.e., maximum Btu per inch thickness per hour per square foot.

C. pcf: Pounds per cubic foot.

D. PVC: Polyvinylchloride.

1.03 SUBMITTALS

A. Product Data: Manufacturer's catalog sheets, specifications and installation instructions for the following:
   1. Insulation Materials.
   2. Jacket Materials.

B. Quality Control Submittals:
   1. Installers Qualification Data:
      a. Name of each person who will be performing the Work, and their employer's name, business address and telephone number.
      b. Furnish names and addresses of the required number of similar projects that each person has worked on which meet the qualifications.

1.04 QUALITY ASSURANCE

A. Qualifications: The persons installing the Work of this Section and their Supervisor shall be personally experienced in mechanical insulation work and shall have been regularly employed by a company installing mechanical insulation for a minimum of 5 years.

B. Regulatory Requirements:

1. Insulation installed inside buildings, including laminated jackets, mastics, sealants and adhesives shall have a Fire Spread/Smoke Developed Rating of 25/50 or less based on ASTM E 84.

PART 2 PRODUCTS

2.01 PIPING INSULATION

A. Fibrous Glass (Mineral Fiber) Insulation: Composed principally of fibers manufactured from rock, slag, or glass, with or without binders, and asbestos free.
   1. Preformed Pipe Insulation: Minimum density 3 pcf; ASTM C 547:
      a. Class 1 (Suitable for Temperatures Up to 450 degrees F): K of 0.26 at 75 degrees F.
   2. Premolded Fitting Insulation: Minimum density 4.0 pcf, K of 0.26 at 75 degrees F; ASTM C 547, Class 1.
   3. Insulation Inserts for PVC Fitting Jackets: Minimum density 1.5 pcf, K of 0.28 at 75 degrees F; ASTM C 553, Type III.
      a. Suitable for temperatures up to 450 degrees F.
   4. Cement: ASTM C 449/C 449M.

2.02 INSULATION JACKETS

A. Laminated Vapor Barrier Jackets for Piping: Factory applied by insulation manufacturer, conforming to ASTM C 1136, Type I.
   1. Type I: Reinforced white kraft and aluminum foil laminate with kraft facing out.
      a. Pipe Jackets: Furnished with integral 1-1/2 inch self sealing longitudinal lap, and separate 3 inch wide adhesive backed butt strips.
   2. Laminated vapor barrier jackets are not required for flexible elastomeric foam insulation.

B. Premolded PVC Fitting Jackets:
   1. Constructed of high impact, UV resistant PVC.
      a. ASTM D 1784, Class 14253-C.
      b. Working Temperature: 0-150 degrees F.

2.03 ADHESIVES, MASTICS, AND SEALERS

A. Lagging Adhesive (Canvas Jackets): Childers' CP-50A, Epolux's Cadalag 336, Foster's 30-36.

B. Vapor Seal Adhesive (Fibrous Glass Insulation): Childers' CP-82, Epolux's Cadoprene 400, Foster's 85-75 or 85-20.

C. Vapor Barrier Mastic/Joint Sealer (Fibrous Glass Insulation): Childers' CP-30, Epolux's Cadalar 670, Foster's 95-44 or 30-35.

D. Adhesive (Flexible Elastomeric Foam): Armstrong's 520, Childers' CP-80, Epolux's Cadoprene 488, Foster's 82-40.

2.04 MISCELLANEOUS MATERIALS

A. Pressure Sensitive Tape for Sealing Laminated Jackets:
   1. Acceptable Manufacturers: Alpha Associates, Childers, Ideal Tape, Morgan Adhesive.
   2. Type: Same construction as jacket.

PART 3 EXECUTION

3.01 PREPARATION

A. Perform the following before starting insulation Work:
   1. Install hangers, supports and appurtenances in their permanent locations.
   2. Complete testing of piping.
   3. Clean and dry surfaces to be insulated.

3.02 INSTALLATION, GENERAL

A. Install the Work of this Section in accordance with the manufacturer's printed installation instructions unless otherwise specified.

B. Provide continuous piping insulation and jacketing when passing thru interior wall, floor, and ceiling construction.
   1. At Through Penetration Firestops: Coordinate insulation densities with the requirements of approved firestop system being installed. See Section 078400.
      a. Insulation densities required by approved firestop system may vary with the densities specified in this Section. When this occurs use the higher density insulation.

C. Do not intermix different insulation materials on individual runs of piping.

3.03 INSTALLATION AT HANGERS AND SUPPORTS

A. Reset and realign hangers and supports if they are displaced while installing insulation.

B. Install high density jacketed insulation inserts at hangers and supports for insulated piping.

C. Insulation Inserts For Use with Fibrous Glass Insulation:
   1. Where clevis hangers are used, install insulation shields and high density jacketed insulation inserts between shield and pipe.
      a. Where insulation is subject to compression at points over 180 degrees apart, e.g. riser clamps, U-bolts, trapezes, etc.; fully encircle pipe with 2 protection shields and 2 high density

jacketed fibrous glass insulation inserts within supporting members.

1) Exception: Locations where pipe covering protection saddles are specified for hot service piping, 6 inch and larger.

D. Insulation Inserts For Use with Flexible Elastomeric Foam Insulation:

1. Where clevis hangers are used, install insulation shields with hardwood filler pieces, same thickness as adjoining insulation, inserted in undersized die cut or slotted holes in insulation at support points.
2. Contour hardwood blocks to match the curvature of pipe, and shield.
3. Coat dowels and blocks with insulation adhesive, and insert while still wet.
4. Vapor seal outer surfaces of dowels and blocks with adhesive after insertion.
5. Install filler pieces as follows:

PIPE/TUBING SIZE	FILLER PIECES	POSITION
Thru 1-1/2”	2 dowel plugs	6 o’clock; in tandem
2” thru 4”	1 block, 2 dowel plugs	6 o’clock, and 4 & 8 o’clock respectively
6” thru 8”	2 blocks, 4 dowel plugs	6 o’clock; in tandem and 4 & 8 o’clock; in tandem

3.04 INSTALLATION OF FIBROUS GLASS HOT SERVICE INSULATION

A. Install insulation materials with field or factory applied ASTM C 1136 Type I laminated vapor barrier jacket unless otherwise specified.

B. Canvas Jackets on Piping, Fittings, Valves, Flanges, Unions, and Irregular Surfaces:

1. For Piping 2 inch Size and Smaller: 4 oz per sq yd unless otherwise specified.
2. For Piping Over 2 inch Size: 6 oz per sq yd unless otherwise specified.

C. Piping:

1. Butt insulation joints together, continuously seal minimum 1-1/2 inch wide self-sealing longitudinal jacket laps and 3-inch wide adhesive backed butt strips.
   a. Substitution: 3 inch wide pressure sensitive sealing tape, of same material as the jacket, may be used in lieu of butt strips.
2. Fill voids in insulation at hanger with insulating cement.
3. Exceptions:
   a. Piping in Accessible Shafts, Attic Spaces, Crawl Spaces, Unfinished Spaces and Concealed Piping: Butt insulation joints together and secure minimum 1-1/2 inch wide longitudinal jacket laps and 3 inch wide butt strips of same material as jacket,

with outward clinching staples on maximum 4 inch centers. Fill voids in insulation at hangers with insulating cement.

b. Piping in Tunnels: Butt insulation joints together and secure minimum 1-1/2 inch wide longitudinal jacket laps and 3 inch wide butt strips, of same material as jacket, with outward clinching staples on maximum 4 inch centers and 16 gage wires a minimum of 4 loops per section. Fill voids in insulation with insulating cement.

D. Fittings, Valves, Flanges and Irregular Surfaces:

1. Insulate with mitre cut or premolded fitting insulation of same material and thickness as insulation.
2. Secure in place with 16-gage wire, with ends twisted and turned down into insulation.
3. Butt fitting, valve and flange insulation against pipe insulation, and fill voids with insulating cement.
4. Insulate valves up to and including bonnets, without interfering with packing nuts.
5. Apply leveling coat of insulating cement to smooth out insulation and cover wiring.
6. After insulating cement has dried, coat insulated surface with lagging adhesive, and apply 4 oz or 6 oz canvas jacket as required by pipe size.
   a. Lap canvas jacket on itself and adjoining pipe insulation at least 2 inches.
   b. Size entire canvas jacket with lagging adhesive.
7. Exceptions:
   a. In Types E, F, and G Service Piping Systems: Valves, fittings and flanges may be insulated with premolded PVC fitting jackets, with fibrous glass insulation inserts.
      1) Additional insulation inserts are required for services with operating temperatures over 250 degrees F or where insulation thickness exceeds 1-1/2 inches. The surface temperature of PVC fitting jacket must not exceed 150 degrees F.
   b. In Types E, F, and G Service Piping Systems: Insulate fittings, valves, and irregular surfaces 3 inch size and smaller with insulating cement covered with 4 oz or 6 oz canvas jacket as required by pipe size.
      1) Terminate pipe insulation adjacent to flanges and unions with insulating cement, trowelled down to pipe on a bevel.
   c. Fittings, Valves, Flanges, and Irregular Surfaces In Concealed Piping, Piping in Accessible Shafts, Attic Spaces, Crawl Spaces, Unfinished Rooms, Unfinished Spaces, and Tunnels: Sizing of canvas surface is not required.
   d. Type H Service Piping Systems: Insulate fittings, valves, flanges, unions, and irregular surfaces 3 inch size and smaller with insulating cement covered with 4 oz or 6 oz canvas jacket as required by pipe size.

3.05 FIELD QUALITY CONTROL

A. Field Samples: The Director's Representative, may at his discretion, take field samples of installed insulation for the purpose of checking materials and application. Reinsulate sample cut areas.

3.06 PIPING INSULATION SCHEDULE

A. Insulate all cold service and hot service piping, and appurtenances except where otherwise specified.

3.07 HOT SERVICE INSULATION MATERIAL SCHEDULE

	SERVICE AND TEMPERATURES	INSULATION MATERIAL	PIPE SIZES (INCHES)	MINIMUM (NOMINAL) INSULATION THICKNESS (INCHES)
E	Water and other fluids 105 F to140 F.	Flex. Elastomeric Foam or Fibrous Glass	1-1/2 & Less Over 1-1/2	1 2
F	Water and other fluids 141 F to 250 F.	Fibrous Glass	6 & Less 8 & Up	2 2-1/2
F	Steam (LPS) to 15 psig	Fibrous Glass	1-1/2 & Less 2 & Up	1-1/2 3
G	Water and other fluids 251 F to 350 F.	Fibrous Glass	1 & Less 1-1/4 to 4 5 and Up	2 2-1/2 3-1/2
G	Steam (MPS) to 16 to 125 psig	Fibrous Glass	1 & less 1-1/4 to 4 5 & Up	2 3 3-1/2
H	Water and other fluids Above 350 F.	Fibrous Glass	2 & less 2-1/2 to 4 5 & Up	2-1/2 3 3-1/2

	SERVICE AND TEMPERATURES	INSULATION MATERIAL	PIPE SIZES (INCHES)	MINIMUM (NOMINAL) INSULATION THICKNESS (INCHES)
H	Steam (HPS) to 126 psig and Above	Fibrous Glass	1-1/2 & less 2 to 4 5 & Up	2-1/2 3 3-1/2

A. **NOTES:**

1. Insulate piping in tunnels and conduits with insulation of thickness as follows:
   a. Types E, F, and G Service: Minimum 2 inch thick unless greater thickness is specified in Hot Service Insulation material Schedule above.
   b. Type H Service: Minimum 4 inch thickness.

3.08 SCHEDULE OF METAL JACKETING FOR INSULATED PIPE

A. Jacket exposed insulated risers with preformed sectional aluminum metal jacketing, in piping systems with service temperatures 105-450 degrees F, installed in finished rooms or finished spaces above Basement Floor Level.

B. Piping in Tunnel Manholes: Jacket insulated piping with circumferentially corrugated aluminum jacketing.
   1. Lap longitudinal and circumferential joints a minimum of 2 inches.
   2. Secure jacketing in place with 1/2 inch x 0.020 inch thick aluminum bands secured with aluminum wing type seals, on maximum 12 inch centers.
   3. Jacketing is not required on fittings, valves, flanges, and irregular surfaces.
   4. Install jacketing so as to avoid trapping condensation and precipitation.
   5. Extend jacketing a minimum of 10 feet inside tunnels in all directions.

END OF SECTION

SECTION 232000

HVAC PIPING

PART 1 GENERAL

1.01 RELATED WORK SPECIFIED ELSEWHERE

A. Through Penetration Firestops: Section 078400.

B. Sealants: Section 079200.

1.02 SUBMITTALS

A. Product Data:
   1. Catalog sheets and specifications indicating manufacturer name, type, applicable reference standard, schedule, or class for specified pipe and fittings.
   2. Material Schedule: Itemize pipe and fitting materials for each specified application in Pipe and Fittings Schedule in Part 3 of this Section. Where optional materials are specified indicate option selected.

B. Quality Control Submittals:
   1. Installers Qualification Data:
      a. Welder Qualification Data: Copies of certification; include names, home addresses.
      b. Welding Procedures:
         1) Copy of QW-482 "Suggested Format for Welding Procedure Specification (WPS)" for all welders for all weld types.
         2) Copy of QW-483 "Suggested Format for Procedure Qualification Record (PQR)" as specified in Welding Quality Assurance below for all weld types.
      c. Welders' Certificates:
         1) Copy of QW-484 "Suggested Format for Manufacturer's Record of Welder or Welding Operator Qualification Tests (WPQ)" for all welders for all weld types.
      d. Brazer Qualification Data for Refrigerant Piping: State refrigerant piping brazing experience; include names, home addresses and social security numbers of brazers.
   2. Quality Control Submittals (for Hydraulic Press Joints, if used): Copy of hydraulic press fitting manufacturer's printed field inspection procedures for hydraulic press joints in copper tubing.
   3. Manufacturer's Data: Copy of mill certificates, laboratory test and manufacturing reports relating to chemical and physical properties of pipe, fittings, and related materials.
   4. Welding Procedure Submittals: Submit the following:
      a. Welding Procedure Specifications: Provide for each weld type.

1) Recommended to use ASME Form E00006, QW-482 "Suggested Format for Welding Procedure Specification (WPS)".

b. Procedure Qualification Records: Provide for each weld type.

1) Recommended to use ASME Form E00007, QW-483 "Suggested Format for Procedure Qualification Record (PQR)".

5. Contract Closeout Submittals:

a. Copy of Final Hydrostatic Testing Record Log.

1.03 QUALITY ASSURANCE

A. Qualifications of Welding Procedures, Welders and Welding Operators: Comply with the following:

1. Section IX ASME Boiler and Pressure Vessel Code, Part QW Welding.
2. American Welding Society Standard AWS B 2.1.

B. Welding Procedures:

1. Record in detail, and qualify the Welding Procedure Specifications for every welding procedure that is proposed to be used for the Project.
2. Develop procedures for all metals included in the work.
3. Qualify the procedures for making transition welds between different materials, or between plates or pipes of different wall thickness.
4. Qualification for each welding procedure shall conform to the requirements of ASME B31.1, and as specified herein.
5. Describe the method for each system including the number of beads, the volts, the amperes, and the welding rod for various pipe thicknesses and materials.
6. The welding procedures shall specify end preparation for butt welds including cleaning, alignment, and root openings.
7. Preheat, interpass temperature control, and postheat treatment of welds shall be as required by approved welding procedures, unless otherwise indicated or specified.
8. Approval of any procedure does not relieve the Contractor of the sole responsibility for producing acceptable welds.
9. Welding procedures shall be identified individually and shall be clearly referenced to the type of welding required for this project.
10. These procedures shall be the same as those used for all pipe welder qualification tests, all shop welds, and all field welds.
11. Provide procedure qualification records for all proposed Welding Procedure Specifications (WPS).

C. Welder Qualification:

1. WPQs:

a. Provide welder qualifications for each welder for each weld type.

b. Recommended to use ASME Form E00008, QW-484 "Suggested Format for Manufacturer's Record of Welder or Welding Procedure Qualification Tests (WPQ)."

2. Perform WPQs under the witness of an independent agency.

a. The witness shall be a representative of an independent testing agency, Authorized Inspector, or consultant, any of which must be approved by the National Certified Pipe Welding Bureau.
b. The qualifying test segment must be a 2 inch nominal pipe size with wall thickness within range of the WPS.
c. Tests position shall be "6G" per ASME Section IX.

3. Evidence of Continuity: Welder qualifications must be current.
   a. If the qualification test is more than 6 months old, provide record of welding continuity for each welder.
   b. Record of welding continuity shall show that the welder in question has performed welding to the procedure in question without a 6 month continuous span of inactivity since the date that the welder qualification test was passed for the submitted welding procedure.
   c. Record of welding continuity shall include, at a minimum, the welder's employer name and address, the date the welder qualification test was passed, and the dates indicating welding continuity including welding procedure for each date.

D. Weld Records:
1. For all welding within the scope of ASME B31.1, submit for approval an administrative procedure for recording, locating, monitoring, and maintaining the quality of all welds to be performed on the project.
   a. The weld record shall include but not be limited to drawings and schedules identifying location of each weld by individual number, identification of welder who performed each weld by individual welder's name, stamp number, date and WPS used.
2. After achieving qualification, but before being assigned work, each qualified person shall be assigned an identifying number by the Contractor to be used to identify all of his welds.
   a. A list of qualified persons with their respective numbers shall be submitted and maintained accurately with deletions and additions reported promptly.
3. Upon completing a joint, the welder shall mark the pipe not more than 6 inches from the weld with the identifying number and the last two digits of the year in which the work was performed.
   a. Make identification marks with a rubber stamp or felt-tipped marker with permanent, weatherproof ink or other methods approved by the Director's Representative that do not deform the metal.
   b. Place identification marks for seam welds adjacent to the welds at 3-foot intervals.
   c. Identification by die stamps or electric etchers is not acceptable.
   d. Provide required markers. Substitution of a map of welds with welders' names is not acceptable.
4. Maintain a constantly updated log available to the Director's Representative at all times.

E. Qualifications of Brazers: Comply with the following:
1. Section IX ASME Boiler and Pressure Vessel Code, Part QB Brazing.

3. Refrigerant Piping: The persons performing the brazing and their Supervisors shall be personally experienced in refrigerant piping brazing procedures.

1.04 DELIVERY, STORAGE, AND HANDLING

A. Pipe Storage:
1. Upon the receipt of each shipment of pipe on the job, maintain the pipe marking, and store pipe in accordance with ASTM material specifications, and method of manufacture (seamless, etc.) of each length of pipe.
2. Pipe markings shall be clearly readable at the time of pipe installation.
3. If at the time of its installation, any length of pipe not readily identifiable will be subject to rejection, or arbitrary downgrading by the Director's Representative to the lowest grade which has been received on the job to that date.
4. Provide factory-applied plastic end-caps on each length of pipe and tube, except for concrete, corrugated metal, bell and-spigot, and clay pipe.
   a. Maintain end-caps through shipping, storage and handling to prevent pipe-end damage and prevent entrance of dirt, debris, and moisture.

PART 2 PRODUCTS

2.01 STEEL PIPE AND FITTINGS

A. Extra Heavy Weight Schedule 80, Black or Galvanized Steel: ASTM A 53, Grade B, Type E or S, or ASTM A 135.
1. Applications over 400 psig: ASTM A 106.

B. Flanges, Welding Neck Type, Same Pressure Rating as Adjoining Pipe: ASME B16.5.

C. Weld Fittings, Carbon Steel:
1. Butt Welding Type: ASME B16.9.
   a. Allied Piping Products Co., Inc.'s Branchlets, Type 1 or 2.
   b. Bonney Forge Corp.'s Weldolets.
2. Socket Welding Type: ASME B16.11.
   a. Allied Piping Products Co., Inc.'s Branchlets, Type 1 or 2.
   b. Bonney Forge Corp.'s Thredolets or Sockolets.

D. Cast Iron Fittings:
1. Steam Pattern, Threaded: ASME B16.4.
   a. Extra Heavy Weight: Class 250.
2. Flanged Fittings and Threaded Flanges: ASME B16.1.
   a. Extra Heavy: Class 250.

E. Unions: Malleable iron, 250 lb class, brass to iron or brass to brass seats.

F. Couplings: Same material and pressure rating as adjoining pipe, conforming to standards for fittings in such pipe. Use taper tapped threaded type in screwed pipe systems operating in excess of 15 psig.

G. Nipples: Same material and strength as adjoining pipe, except nipples having a length of less than one inch between threads shall be extra heavy.

H. Fittings: By same manufacturer as couplings, having pressure ratings equal to or greater than couplings. Comply with the following standards:
1. Steel: ASTM A 53 or A106, Grade B.
2. Malleable Iron: ASTM A 47.
3. Ductile Iron: ASTM A 536.

4. Manufacturer for the intended service; Series 2000 MP by Ameron, or Green Thread CR Series by NOV Fiberglass Systems.
5. Epoxy Adhesive: As recommended and furnished by the pipe and fitting manufacturer for the intended service.

2.02 JOINING AND SEALANT MATERIALS

A. Thread Sealant:
1. LA-CO Industries', Slic-Tite Paste with Teflon.
2. Loctite Corp.'s No. 565 Thread Sealant.
3. Thread sealants for potable water shall be NSF approved.

B. Electrodes and Welding Rods:
1. Electrodes for Use in Arc Welding: Heavily coated, not larger than 3/16 inch diameter exclusive of coating, unless otherwise approved.
2. Welding Rods: Free flowing when fused, so as to avoid excessive puddling.
3. Electrodes for Welding Stainless Steels: Coated and used with reverse polarity.
4. Filler material shall conform to the appropriate AWS-ASTM specification.

C. Flange Gasket Material:
1. For use with Steam, Feedwater, Blow-Off and Natural Gas: Spirally wound, Type 304 stainless steel with non-asbestos filler material, and carbon steel outer ring.
   a. Maximum Operating Pressure: 600 psi at 700 degrees F.
   b. Thickness: 1/16 thick, conforming to the flange face on which they are used.
   c. Acceptable Gaskets: Flexitallic Style CG with Flexite Super Filler by Flexitallic Inc., Deer Park, TX; (281) 479-3491.

D. Flange Bolts, Washers and Nuts
1. Bolts: High strength, ASTM A 193 B7.
2. Washers: ASTM F436 Structural Type 1 hardened steel flat hot dipped galvanized.
3. Nuts: ASTM A194 2H.

2.03 PACKING MATERIALS FOR BUILDING CONSTRUCTION PENETRATIONS

A. Mechanical Modular Seals: Thunderline Corp.'s Link Seal wall and floor seals designed for the service of piping system in which installed.

2.04 DIELECTRIC CONNECTORS

A. Dielectric Fitting: Bronze ball valve with end connections and pressure rating to match associated piping.
   1. Nipples with inert non-corrosive thermoplastic linings are not acceptable.

B. Flange Electrical Insulation Kit: Consisting of dielectric sleeves and washers, and dielectric gasket.
   1. Steam Applications:
      a. Rated 200 psi at 388 degrees F: ANSI Class 300, full faced durlon gasket with bolt holes, double pyrox washers, and pyrox sleeves; Model 300 by APS, Lafayette, LA 70596, (337) 233-6116.

2.05 PIPE SLEEVES

A. Type A: Schedule 40 steel pipe.

B. Type B: No. 16 gage galvanized sheet steel.

C. Type C: Schedule 40 steel pipe with 1/4 inch steel collar continuously welded to pipe sleeve. Size steel collars as required to span a minimum of one cell or corrugation, on all sides of the rough opening thru the metal deck.

PART 3 EXECUTION

3.01 INSTALLATION - GENERAL

A. Install piping at approximate locations indicated, and at maximum height.

B. Install piping clear of door swings, and above sash heads.

C. Make allowances for expansion and contraction.

D. Allow for a minimum of one inch free air space around pipe or pipe covering, unless otherwise specified.

E. Install vertical piping plumb.

F. Use fittings for offsets and direction changes, except for Type K soft annealed copper tube.

G. Cut pipe and tubing ends square; ream before joining.

H. Threading: Use American Standard Taper Pipe Thread Dies.
   1. Thread brass pipe with special threading dies.

I. Make final connections to equipment with unions, flanges, or mechanical type joint couplings.

3.02 STEAM PIPING SYSTEMS

A. Install to permit complete drainage.

B. Pitch:
   1. Pitch horizontal steam mains, return mains and branches downward, 1/4 inch per 10 feet in direction of flow.
   2. Pitch steam runouts and connections to risers upward, 3/16 inch per foot in direction of flow.
   3. Pitch return branches and runouts downward, 1/4 inch per 10 feet in direction of flow.

C. Use eccentric reducers flat on bottom in horizontal piping.

D. Install drip legs with traps at low points, ends of mains, bottoms of risers and ahead of pressure regulators and control valves.

3.03 PIPE JOINT MAKE-UP

A. Threaded Joint: Make up joint with a pipe thread compound applied in accordance with the manufacturer's printed application instructions for the intended service.

B. Flanged Pipe Joint:
   1. Install threaded companion flanges on steel pipe; flanges on galvanized pipe are not required to be galvanized.
   2. Provide a gasket for each joint.
      a. Hot Water Pipe Gasket: Coat with a thin film of oil before making up joint.
      b. Compressed, Control, and Instrument Air Pipe Gasket: Coat with a thin film of oil before making up joint.
   3. Flange Bolt Installation:
      a. Clean and coat nuts, bolt threads and washers with anti-seize lubricant before making up joint.
      b. With each bolt; one hardened steel washer is required under the nut.
      c. With each stud; one hardened steel washer is required under the nut at each end.
      d. Torque Requirements: Stress bolts to 30,000 psi.
      e. Check torque with a calibrated breaking action torque wrench on the final torque round.
      f. Bolts shall be cold and hot torqued.

g. Torque Pattern: Cross or star pattern with at least four passes. Limit each pass to 30 percent of full torque increases.

h. Hot torque: Re-torque the flange bolts with the system at normal operating pressure, and operating temperature for minimum of 12 to 15 hours.

4. Coat bolt threads and nuts with anti-seize lubricant before making up joint.

C. Welded Pipe Joint:

1. General:

a. Weld pipe joints only when ambient temperature is above 0 degree F where possible.

b. Bevel pipe ends at a 37.5 degree angle where possible, smooth rough cuts, and clean to remove slag, metal particles, and dirt.

c. Use pipe clamps or tack-weld joints with 1 inch long welds; 4 welds for pipe sizes to 10 inches, 8 welds for pipe sizes 12 inches to 20 inches.

d. Build up welds with stringer-bead pass, followed by hot pass, followed by cover or filler pass.

e. Eliminate valleys at center and edges of each weld.

f. Weld by procedures which will ensure elimination of unsound or unfused metal, cracks, oxidation, blow-holes, and non-metallic inclusions.

g. Do not weld-out piping system imperfections by tack-welding procedures. Refabricate as required to comply with requirements.

h. If piping component ends are bored, such boring shall not result in the finished wall thickness after welding less than the minimum design thickness.

i. Align the inside diameters of piping components to be butt-welded as accurately as is practicable within existing commercial tolerances on diameters, wall thickness and out of roundness.

j. Preserve alignment during welding. The internal misalignment of the ends to be joined shall not exceed 0.05 inch.

2. Welding Processes:

a. All welding on metal piping systems shall be performed using qualified welding procedures and qualified welders and welding operators in accordance with Section IX of the ASME Boiler and Pressure Vessel Code.

b. All welding shall be performed by a process that is compatible with the work being welded and the working conditions. Shielded metal-arc welding (SMAW) shall not be used on work less than 3/16 inch thick.

c. Welding shall be performed by using only one of the following processes:

1) Shielded Metal Arc Welding (SMAW), also know as "Stick" Welding.
2) Gas Tungsten Arc Welding (GTAW), also known as TIG and Heliarc Welding.
3) Submerged Arc Welding (SAW).

d. Where a specific welding process is called for in the piping group, it shall govern.

e. All stainless steel work less than 3/16 inch thick shall be welded by the gas tungsten-arc (GTAW) process with the back side purged with argon. Work thicker than 3/16 inch shall have a root pass by the GTAW Process with the back purged with argon and the balance of the weld may be completed by SMAW Process or any other suitable process.

3. Welding Grooves:

a. Bevel the ends of steel pipe and fittings to be erected with butt welded joints to form welding grooves in accordance with ANSI B16.25, except where otherwise noted herein, or on the Contract Drawings.

b. Bevel welding grooves for butt welded joints in pipe of unequal wall thickness in accordance with ASME Code for Pressure Piping B31.1 - latest edition, latest revision and section that is applicable.

4. Backing Rings: Backing rings or consumable inserts are not acceptable.

5. Cleaning of Welding: Completely remove all slag or flux remaining on the bead of welding before laying down the next successive bead and at the completion of the weld.

a. Wire brush all completed welds a minimum of 2 inches on both sides and coated with one coat of high temperature (minimum rated 500 deg. F) primer prior to being insulated.

6. Preheating of Welded Joints: Pipe adjacent to joints before and during welding shall be preheated by any suitable method in accordance with the qualified welding procedure, and in all cases shall be in accordance with ASME B31.1, Paragraph 131.

7. Weld Quality:

a. All welds shall have full penetration and complete fusion with a minimum of weld metal protruding on the inside of the pipe.

b. The finished weld contour shall be uniform, with the toe or edge of the weld merging smoothly into the base material.

c. Butt welds shall have a slight reinforcement build-up gradually from the toe or edge toward the center of the weld.

d. The limitation on butt weld reinforcement shall be in accordance with ASME B31.1, Table 127.4.2 and shall apply separately to both inside and outside surfaces of the joint.

e. Fillet welds may be slightly concave on the furnished surface.

8. Identification of Welders:

a. Upon completing a joint, the welder shall mark the pipe not more than 6 inches from the weld with the identifying number and the last two digits of the year in which the work was performed.

b. Make Identification marks with a rubber stamp or felt-tipped marker with permanent, weatherproof ink or other methods approved by the Director's Representative that do not deform the metal.

c. Place identification marks for seam welds adjacent to the welds at 3-foot intervals.

d. Identification by die stamps or electric etchers is not acceptable.

e. Provide required markers. Substitution of a map of welds with welders' names is not acceptable.

9. Postheat Treatment of Welded Joints In Carbon and Ferritic Alloy Steel Pipe:

a. Postheat treatment of welded joints in carbon and ferritic alloy steel piping shall be in accordance with ASME B31.1, as specified in the piping group, or on the Contract Drawings, except the cooling rate for stress relieving shall not exceed 200 degrees F per hour down to 600 degrees F.

1) In each case, the temperature given is a minimum and where a higher temperature is called for in the welding procedure, the welding procedure shall govern.

b. Perform stress relieving by one of the following methods:

1) Electrical resistance or induction coil heating is the preferred method for field use.

a) Record the temperature by pyrometer from the start of the heating operation until 600 degrees F. is reached during cooling.

2) The gas, natural or liquid petroleum, torch stress relieving procedure may be used only where approved by Director's Representative.

a) Maintain temperature record from the start of the heating operation until 600 degrees F. is reached during cooling.

b) Place two measuring thermocouples 180 degrees apart at the centerline of the weld and two measuring thermocouples each placed 90 degrees away from the centerline thermocouples at a distance from the centerline of the weld equal to three times the wall thickness.

3 Furnace postheat treatment may be employed when desirable to treat several welded or formed assemblies simultaneously.

a) Temperature range, heating conditions, holding time, and cooling conditions shall be as outlined above but shall satisfy the requirements for the thickest section, etc. of the load.

b) When this method is used, adequately support pipe and pipe assemblies to minimize distortion.

1) Piping Conveying Materials up to 140 degrees F other than Fuel Oil System Piping: Type 1C (one part).
2) Piping Conveying Materials over 140 degrees F: Type 4.
3) Fuel Oil System Piping: Type 1C (2 part).

3.05 PIPE AND FITTING SCHEDULE

A. Abbreviations: The following abbreviations are applicable to the Pipe and Fitting Schedule:

BS	Black steel.
SW	Standard weight.
WE	Weld end.
XH	Extra heavy weight.

B. Where options are given, choose only one option for each piping service. No deviations from selected option will be allowed.

C. Schedule of Pipe and Fittings for the different piping services is as follows:
1. Steam (HPS) 126 to 250 psig:
   a. 1-1/2 inch and less: SW BS pipe, with SE XH CI fittings, or WE & SW ST fittings.
   b. 2 inch and up: SW BS pipe with WE SW ST fittings.

2. Vents (V):
   a. 4 inch and less: SW BS pipe, with SE SW CI fittings, or GE fittings.
   b. 5 inch and up: SW BS pipe, with WE SW ST fittings, or GE fittings.

END OF SECTION

REPAIR UNDERGROUND STEAM TUNNELS
WILLARD DRUG TREATMENT CENTER
7116 COUNTY ROUTE 132, WILLARD, NEW YORK

O.G.S. PROJECT NO. 44288-C, H, P, E

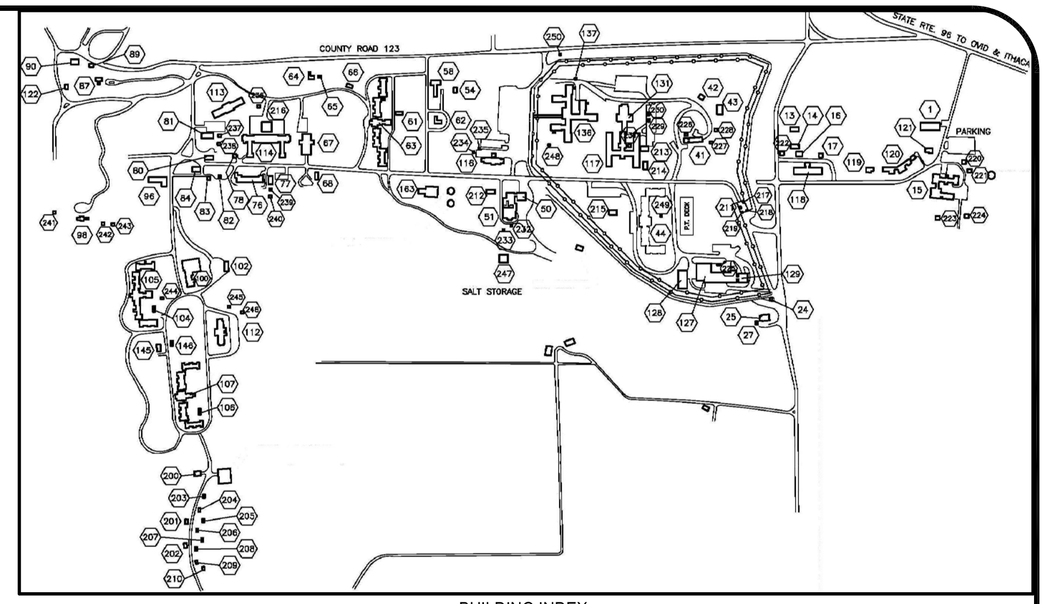

BUILDING INDEX

1. REGIONAL TRAINING
13. STAFF RESIDENCE
14. STAFF RESIDENCE
15. GRANDVIEW
16. STAFF GARAGE
17. STAFF GARAGE
24. TRANSFORMER ROOM
25. GRANGE HOUSE
27. STAFF GARAGE
41. GREENHOUSE
42. STORAGE
43. STORAGE BUILDING
44. SUNNYCROFT
50. FIREHOUSE
51. POWER PLANT
54. FARM SHED
58. FARM BUILDING
61. MAPLES STORAGE
62. STORAGE BARN
63. MAPLES
64. STAFF RESIDENCE
65. STAFF GARAGE
66. STORAGE
67. HADLEY HALL
68. RECREATION CENTER
76. TRANS. GARAGE
77. GARAGE
78. STAFF GARAGE
80. STORAGE
81. JACKSON BUILDING
82. STAFF RESIDENCE
83. MORGUE
84. GROUNDS
87. BLEAKER HOUSE
89. SEWAGE LIFT STATION
90. STORAGE
96. STORAGE
98. BROOKSIDE
100. RECYCLE
102. STORAGE
104. STORAGE
105. PINES BUILDING
106. STORAGE
107. EDGEMERE
112. ALCOHOL REHAB
113. NORTH HOME
114. ELLIOT HALL
116. SENECA HOME
117. BIRCHES
118. CAYUGA HOME
119. STAFF RESIDENCE
120. 5 FAMILY APT
121. STAFF RESIDENCE
122. PUMP HOUSE
127. STOREHOUSE
128. DRAFT
129. MAINTENANCE STORAGE
131. CENT KITCHEN
136. HATCH BUILDING
137. DUMPSTER SHED
145. STAFF RESIDENCE
146. STAFF RESIDENCE
163. WATER TREATMENT PLANT
200. CAMP EDGEMERE LODGE
201. KITCHEN CABIN
202. BATH CABIN
203. SPRUCE CABIN
204. OAK CABIN
205. LOCUST CABIN
206. HEMLOCK CABIN
207. BIRCH CABIN
208. MAPLES CABIN
209. PINES CABIN
210. WILLOW CABIN
211. TRUCK TRAP OFFICE
212. STORAGE WORKSHOP
213. PAVILION
214. PAVILION
215. PAVILION
216. KITCHEN ADDITION
217. TRUCK TRAP STORAGE
218. TRUCK TRAP STORAGE
219. OFFICE POST TRUCK TRAP
220. STORAGE
221. STORAGE
222. SCHOOL BUS STOP
223. SHOOTING RANGE BUILDING
224. SHOOTING RANGE BUILDING
225. BLDG WITH WEIGHT SCALE
226. GREENHOUSE
227. STORAGE
228. STORAGE
229. RECYCLING STORAGE
230. RECYCLING STORAGE
231. STORAGE
232. OXYGEN
233. ACETYLENE
234. EQUIPMENT STORAGE
235. EQUIPMENT STORAGE
236. GARBAGE STORAGE
237. JACKSON STORAGE
238. JACKSON STORAGE
239. MAINTENANCE STORAGE
240. MAINTENANCE STORAGE
241. STORAGE
242. STORAGE
243. STORAGE
244. STORAGE
245. STORAGE
246. BIO-HAZARD BUILDING
247. SALT STORAGE
248. RECYCLE STORAGE
249. RECYCLE STORAGE
250. RECYCLE STORAGE

KEY PLAN

INDEX OF DRAWINGS

CONSTRUCTION

G-001	COVER SHEET
G-002 TO G-003	GENERAL NOTES
G-101 TO G-103	SITE PLAN
H-101	HAZARDOUS MATERIALS REMOVAL PLAN
S-101A	TUNNEL A REPAIR PLAN & TYP SECTS A0+00 TO A19+30
S-102A	TUNNEL A REPAIR PLAN & TYP SECTS A19+30 TO A45+52
S-103A	TUNNEL A REPAIR PLAN & TYP SECTS A45+52 TO A56+27
S-104A TO S-174A	TUNNEL A REPAIRS A0+00 TO A56+27
S-101B	TUNNEL B REPAIR PLAN & TYP SECT B0+00 TO B1+80
S-102B TO S-104B	TUNNEL B REPAIRS B0+00 TO B1+80
S-101C	TUNNEL C REPAIR PLAN & TYP SECT C0+00 TO C0+59
S-102C TO S-104C	TUNNEL C REPAIRS C0+00 TO C0+59
S-101C' 1	TUNNEL C' REPAIR PLAN & TYP SECT C'0+00 TO C'2+46
S-102C'	TUNNEL C' REPAIRS C'0+00 TO C'2+46
S-101D	TUNNEL D REPAIR PLAN & TYP SECT D0+00 TO D2+54
S-102D TO S-104D	TUNNEL D REPAIRS D0+00 TO D2+54
S-101F	TUNNEL F REPAIR PLAN & TYP SECT F0+00 TO F0+60
S-102F	TUNNEL F REPAIRS F0+00 TO F0+60
S-101G	TUNNEL G REPAIR PLAN & TYP SECTS G0+00 TO G2+86
S-102G TO S-105G	TUNNEL G REPAIRS G0+00 TO G2+86
S-101H	TUNNEL H REPAIR PLAN & TYP SECT H0+00 TO H3+59
S-101I	TUNNEL I REPAIR PLAN & TYP SECT I0+00 TO I0+55
S-102I	TUNNEL I REPAIRS I0+00 TO I0+55
S-101J	TUNNEL J REPAIR PLAN & TYP SECTS J0+00 TO J0+20.5
S-102J	TUNNEL J REPAIRS J0+00 TO J0+20.5
S-101K	TUNNEL K REPAIR PLAN & TYP SECT K0+00 TO K3+00
S-102K TO S-105K	TUNNEL K REPAIRS K0+00 TO K3+00
S-101L	TUNNEL REPAIR PLAN & TYP SECT L0+00 TO L1+84
S-102L TO S-104L	TUNNEL REPAIRS L0+00 TO L1+84
S-101M	TUNNEL M REPAIR PLAN & TYP SECT M0+00 TO M0+23
S-102M	TUNNEL M REPAIRS M0+00 TO M0+23
S-101N	TUNNEL N REPAIR PLAN & TYP SECT N0+00 TO N1+19.5
S-102N TO S-103N	TUNNEL N REPAIRS N0+00 TO N1+19.5
S-101O	TUNNEL O REPAIR PLAN & TYP SECT O0+00 TO O2+40
S-102O TO S-104O	TUNNEL O REPAIRS O0+00 TO O2+40
S-101O'	TUNNEL O' REPAIR PLAN & TYP SECT O'0+00 TO O'3+82
S-102O' TO S-106O'	TUNNEL O' REPAIRS O'0+00 TO O'3+82
S-101P	TUNNEL P REPAIR PLAN & TYP SECT P0+00 TO P8+85
S-102P TO S-112P	TUNNEL P REPAIRS P0+00 TO P8+85
S-501	CONCRETE DETAIL AND NOTES
1 S-502 AND S-503	MANHOLE DETAILS
S-504	MANHOLE DETAILS AND SECTIONS
S-505	ACCESS HATCH PLAN AND SECTION
S-506	TUNNEL A VAULT HATCH REMOVAL & RECONSTRUCTION
S-507	TUNNEL A VAULT RISER REMOVAL PLAN & SECTIONS
S-508	TUNNEL A VAULT RECONSTRUCTION PLAN & SECTIONS
S-509	TUNNEL A VAULT RECONSTRUCTION DETAILS & SECTIONS
S-510	TUNNEL A CROSSOVER BRIDGES ELEVATIONS & SECTIONS
S-511	TUNNEL K EXISTING AND PROPOSED SHIPS LADDER
S-512	STANCHION REPAIR DETAILS
S-513	TUNNEL I BULK HEAD DETAILS
S-514	TUNNEL P CLOSURE DETAILS
S-515	SERVICE VAULT 1 DETAILS
S-516	SERVICE VAULT 2 DETAILS
S-517	SERVICE VAULT 3 DETAILS
S-518	SERVICE VAULT 4 DETAILS
S-519	SERVICE VAULT 5 DETAILS
S-520	SERVICE VAULT 6 DETAILS
1 S-521	MISCELLANEOUS DETAILS
S-522	UTILITY MANHOLE DETAILS
S-601 TO S-603	STANCHION REPAIR SCHEDULE

HVAC

M-001	LEGEND, ABBREVIATIONS AND GENERAL NOTES
M-101	SITE PIPING PLAN
M-102	STEAM PIPING PLAN
M-103	STEAM VALVE INSULATION PLAN
M-501	HVAC DETAILS

PLUMBING

P-001	LEGEND, ABBREVIATIONS AND GENERAL NOTES
P-101	SITE PLAN
1 P-102 AND P-103	TUNNEL SUMP PUMP PLANS
P-501	DETAILS, SECTIONS AND SCHEDULE

ELECTRICAL

E-001	LEGEND, ABBREVIATIONS, SYMBOLS, DETAILS, AND NOTES
E-101	TUNNEL ELECTRICAL REMOVAL PLAN
E-102 TO E-104	PARTIAL TUNNEL ELECTRICAL REMOVAL PLAN
E-105	PARTIAL TUNNEL REMOVAL PLAN
E-106 TO E-109	PARTIAL TUNNEL ELECTRICAL REMOVEL PLAN
E-110	TUNNEL LIGHTING PLAN
E-111 TO E-118	PARTIAL TUNNEL LIGHTING PLAN
E-601	ELECTRICAL ONE-LINE DIAGRAMS
E-602	ELECTRICAL PANELBOARD SCHEDULES

STATE OF NEW YORK
DEPARTMENT OF CORRECTIONS AND COMMUNITY SUPERVISION
BRIAN FISCHER **COMMISSIONER**

NYS OFFICE OF GENERAL SERVICES
Serving New York

ANDREW M. CUOMO
Governor

ROANN M. DESTITO
Commissioner

REVISED DRAWING
2/22/2013

G-001

Feb 21,2013 - 9:21am
E:\2008\2008061.00 NYSOGS Structural Term Assignment\2008061.06 Willard DTC Tunnel Rehab\Drawings\ADDENDUM 1_FEB2013\44288_G-001.dwg
36x24 PLOT SHEET

LEGEND

NORTH ARROW

SECTION (X / X-XXX / SECTION / DWG No.)

ELEVATION (A, B, C, D, S-519)

BREAK LINE

CONTRACT LIMIT LINE (CLL) OR GRADING LIMIT LINE (GLL)

UNDERGROUND STEAM TUNNEL

CENTERLINE

DIRECTION OF FLOW

DETAIL (# / X-XXX)

REVISION NUMBER

REPAIR TYPE 1, DWG. NO. S-501

REPAIR TYPE 2, DWG. NO. S-501

REPAIR TYPE 3, DWG. NO. S-501

REPAIR TYPE 4, DWG. NO. S-501

JOINT REPAIR, DWG. NO. S-501

STRUCTURAL FILL

CONCRETE

LARGE MASTIC WRAPPED PIPE (15" TO 18" DIAMETER INCLUDES IINSULATION MATERIAL)

MEDIUM MASTIC WRAPPED PIPE (9" TO 12" DIAMETER INCLUDES INSULATION MATERIAL)

SMALL MASTIC WRAPPED PIPE (3" TO 6" DIAMETER INCLUDES INSULATION MATERIAL)

FIBERGLASS WRAPPED PIPE

UNINSULATED PIPE

CONDUIT

ABBREVIATIONS

APPROX	APPROXIMATE(LY)
BLDG	BUILDING
C	CONDUIT
C.I.P.	CAST-IN-PLACE
CJ	CONTROL JOINT
DWG	DRAWING
E	EXPANSION JOINT
FD	FLOOR DRAIN
FT	FOOT OR FEET
GALV	GALVANIZED
IIN	INCH
MAX	MAXIMUM
MIN	MINIMUM
MH	MANHOLE
NIC	NOT IN CONTRACT
NTS	NOT TO SCALE
OC	ON CENTER
OD	OUTSIDE DIAMETER
REV	REVISION
SAN	SANITARY SEWER
SF	SQUARE FOOT
SP	SUMP PUMP
SR	STAIR REPAIR
T/	TOP OF (SLAB OR WALL)
TYP	TYPICAL
VIF	VERIFY IN FIELD
W/	WITH

GENERAL NOTES:

1. CONSTRUCTION IS TO BE PERFORMED IN ACCORDANCE WITH THE STATE AND FEDERAL CODES.

2. PLANS AND ELEVATIONS HAVE BEEN DEVELOPED FROM EXISTING DRAWINGS PREPARED FOR PROJECT 3346, ENTITLED ADDITIONS AND ALTERATIONS TO POWER PLANT SERVICE CONNECTION, AND DATED AUGUST 18, 1933 AND A SITE INSPECTION OF THE TUNNEL SYSTEM PERFORMED IN SEPTEMBER 2011 AND OCTOBER 2012.

3. THE CONTRACTOR SHALL EXAMINE AND VERIFY IN THE FIELD ALL EXISTING CONDITIONS AND DIMENSIONS WITH THOSE SHOWN ON THE PLANS. IF FIELD CONDITIONS OR DIMENSIONS DIFFER FROM THOSE SHOWN ON THE PLANS, THE CONTRACTOR SHALL REPORT ANY DISCREPANCIES WITH THE CONTRACT DOCUMENTS TO THE DIRECTOR'S REPRESENTATIVE.

4. PROVIDE TEMPORARY SHORING AT EXISTING CONSTRUCTION AS REQUIRED FOR REMOVALS AND RECONSTRUCTION.

5. THE CONTRACTOR SHALL OBTAIN THE SERVICES OF A NEW YORK STATE LICENSED PROFESSIONAL ENGINEER TO DESIGN THE SHORING SPECIFIED ON THE CONTRACT DRAWINGS. THE ENGINEER IS TO VERIFY SHORING REQUIREMENTS AND LOADS AT THE THE SITE BEFORE PREPARING STAMPED SHORING DRAWINGS. CONTRACTOR SHALL SUBMIT STAMPED DRAWINGS AND CALCULATIONS FOR RECORD. THE ACTUAL SHORING TYPE, CONSTRUCTION AND DETAILS SHALL BE INCLUDED IN THE CONTRACTOR'S SUBMISSION. SEE S-101A THRU S-103A.

6. THE CONTRACTOR SHALL PROTECT EXISTING MECHANICAL, ELECTRICAL, AND TELECOMMUNICATION EQUIPMENT FROM DAMAGE DURING CONSTRUCTION OPERATIONS AND ALLOW EQUIPMENT TO REMAIN OPERABLE.

7. USE SUITABLE METHODS TO LIMIT DUST AND DIRT RISING AND SCATTERING IN THE AIR. CLEAN ADJACENT SURFACES DIRTIED BY THE REMOVALS.

8. PROVIDE FOR THE PROPER OFF-SITE DISPOSAL OF ALL CONSTRUCTION DEBRIS AND/OR EXCAVATED MATERIALS IN COMPLIANCE WITH LOCAL, NEW YORK STATE AND FEDERAL LAWS AND REQUIREMENTS.

9. REMOVE DEBRIS FROM WORK AREA AT THE END OF EACH WORK DAY.

13. CONTRACTOR IS RESPONSIBLE FOR PROPER FIELD FITTING OF WORK. THE CONTRACTOR SHALL TAKE FIELD MEASUREMENTS AS REQUIRED AND BE RESPONSIBLE FOR FITTING NEW CONSTRUCTION TO EXISTING CONSTRUCTION.

14. HAZARDOUS MATERIALS HAVE BEEN IDENTIFIED IN THE WORK ZONES. THE CONTRACTOR SHALL TAKE ALL NECESSARY PRECAUTIONS IN ACCORDANCE WITH ALL APPLICABLE REGULATIONS TO PROTECT HIS WORKERS, THE PUBLIC, INMATES, NEW YORK STATE EMPLOYEES AND THE ENVIRONMENT WHEN WORK EFFORTS ARE RELATED TO HAZARDOUS MATERIALS. FOR ADDITIONAL INFORMATION SEE THE COMPLETE ASBESTOS, PCB, LEAD AND MICROBIAL REPORTS PERFORMED BY WATTS ARCHITECTURE & ENGINEERING, P.C. OF BUFFALO NY, IN THE APPENDIX OF THE PROJECT MANUAL.

15. IT IS THE CONTRACTOR'S RESPONSIBILITY TO EXAMINE ALL DRAWINGS AND SPECIFICATIONS AND COORDINATE WORK WITH ALL OTHER CONTRACTOR'S.

16. CONTRACTOR CAN ANTICIPATE THE FOLLOWING SITE AND SOIL CONDITIONS:
    A. SOIL OVERBURDEN CONSISTS OF CLAY, SILT AND GRAVEL. DEPTH AND COMPOSITION VARY ACROSS THE SITE.

    B. UNDERLYING THE SOIL OVERBURDEN IS WEATHERED, RIPPABLE SHALE. THE DEPTH AND EXTENT OF RIPPABLE SHALE IS UNKNOWN. AS SUCH THE CONTRACTOR SHALL MAKE PROVISIONS FOR 120 CUBIC YARDS OF ROCK REMOVAL IN ACCORDANCE WITH ROCK REMOVAL SPECIFICATION FOUND WITHIN THE PROJECT MANUAL.

    C. PERCHED WATER CONDITIONS EXISTS THROUGHOUT THE SITE. CONTRACTOR IS RESPONSIBLE FOR ALL MATERIALS, EQUIPMENT AND LABOR TO PERFORM DEWATERING OPERATIONS IN SUPPORT OF THE WORK.

17. CONTRACTOR IS RESPONSIBLE FOR MAINTAINING A SECURE WORK ZONE IN ACCORDANCE WITH FACILITY SECURITY REQUIREMENTS.

18. DISPOSE OF EXISTING STEEL STANCHION COMPONENTS, NOT SHOWN TO REMAIN OR TO BE RE-USED, BY RECYCLING.

GENERAL DESCRIPTION OF WORK:

- TUNNEL CLEANING
- ASBESTOS ABATEMENT
- PIPE INSULATION
- CONCRETE TUNNEL REPAIR: REMOVAL, FORMING, SELF-CONSOLIDATING CONCRETE AND REINFORCEMENT
- STEAM PIPE STANCHION REPAIRS/REPLACEMENTS
- TUNNEL DRAINAGE IMPROVEMENTS – FLOOR DRAIN GROUTING AND SUMP PIT INSTALLATIONS, PIPING, EXCAVATION AND BACKFILL
- CONCRETE TUNNEL JOINT REPAIRS
- CONCRETE TUNNEL CRACK REPAIRS
- DIRECT BURY STEAM LINE – TRENCH EXCAVATION AND BACKFILL
- ACCESS STAIR INSTALLATIONS
- MANHOLE LADDER REPAIRS
- ADJUST MANHOLE RIM ELEVATIONS
- MANHOLE AND VAULT RISER RECONSTRUCTION
- VAULT ACCESS DOOR REPLACEMENTS
- CLOSING OFF ENDS OF TUNNELS INTO ABANDONED BUILDINGS

GENERAL TUNNEL CONDITION NOTES:

1. THE CONDITION OF THE EXISTING LIGHTING SYSTEM WITHIN THE TUNNEL HAS A BASIC LIGHTING SYSTEM OF WHICH SEVERAL LOCATIONS ARE NON-FUNCTIONING.

2. THE TUNNEL WAS CHALK STATIONED UNDER THE ON-SITE INSPECTION. THE CONSTRUCTION CONTRACTOR SHALL PROVIDE AND MAINTAIN A STATION LINE FOR THE PROJECT.

3. THE TUNNEL SYSTEM AT WILLARD DRUG TREATMENT CENTER IS CLASSIFIED AS CONFINED SPACE FOR THE WORK TO BE COMPLETED UNDER THIS CONTRACT AND ASSOCIATED CONTRACTS.

4. DURING THE ON-SITE INSPECTION OF THE TUNNEL SYSTEM, TEMPERATURES ABOVE 100 F WERE ENCOUNTERED.

5. CONTRACTOR SHALL BE AWARE THAT THE PROPOSED WORK IS IN PROXIMITY TO HIGH TEMPERATURE AND HIGH PRESSURE INSULATED AND UNINSULATED STEAM PIPES. BOTH UNINSULATED AND INSULATED STEAM PIPES SHALL BE COVERED WITH THERMAL BLANKETS TO PROTECT THEM FROM THE REQUIRED WORK AND TO PROTECT THE WORKERS.

6. DURING THE ON-SITE INSPECTION, VARIOUS DEPTHS OF WATER WERE ENCOUNTERED IN THE TUNNEL SYSTEM. WATER LEVELS VARIED FROM DAMP TO TWELVE (12) INCHES DEEP. THE MAJORITY OF THE TUNNEL WAS DRY OR DAMP WITH NO STANDING WATER PRESENT. THE WATER LEVELS ARE KNOWN TO VARY WITH SEASON AND PRECIPITATION.

7. PRIOR TO ANY EXCAVATION, CONSTRUCTION CONTRACTOR SHALL RETAIN THE SERVICES OF A UTILITY LOCATION CONTRACTOR TO MARK OUT UTILITIES IN THE WORK ZONES IN ACCORDANCE WITH DOCCS SECURITY PROCEDURES.

8. CONTRACTOR TO DISPOSE OF ANY EXISTING DEBRIS AND SOIL DEPOSITS THAT ARE ENCOUNTERED PRIOR TO STARTING WORK IN ANY GIVEN AREA. THE ENTIRE INTERIOR SURFACE OF EACH TUNNEL SHALL BE PRESSURE WASHED TO REMOVE ANY DIRT OR DEBRIS PRIOR TO THE START OF ANY CONSTRUCTION ACTIVITIES AND AFTER ALL WORK IS COMPLETED. CONTRACTOR SHALL MAKE PROVISIONS FOR REMOVAL OF 10 CY DEBRIS FROM THE TUNNEL.

NYS OFFICE OF GENERAL SERVICES
Serving New York
ANDREW M. CUOMO
Governor
ROANN M. DESTITO
Commissioner

CONSULTANT

GPI
GREENMAN-PEDERSEN, INC.
CONSULTING ENGINEERS
80 WOLF ROAD, SUITE 300
ALBANY, NY 12205
TEL: (518) 453-9431
FAX: (518) 453-9458
WWW.GPINET.COM

WARNING:
THE ALTERATION OF THIS MATERIAL IN ANY WAY, UNLESS DONE UNDER THE DIRECTION OF A COMPARABLE PROFESSIONAL, I.E. ARCHITECT FOR AN ARCHITECT, ENGINEER FOR AN ENGINEER OR LANDSCAPE ARCHITECT FOR A LANDSCAPE ARCHITECT, IS A VIOLATION OF THE NEW YORK STATE EDUCATION LAW AND/OR REGULATIONS AND IS A CLASS 'A' MISDEMEANOR.

STATE OF NEW YORK · JOHN G. RIZZO · 077511 · LICENSED PROFESSIONAL ENGINEER

CONTRACT: CONSTRUCTION

TITLE: REPAIR UNDERGROUND STEAM TUNNELS

LOCATION: WILLARD DRUG TREATMENT CENTER, 7116 COUNTY ROUTE 132, WILLARD, NEW YORK

CLIENT: DEPARTMENT OF CORRECTIONS AND COMMUNITY SUPERVISION

REVISED DRAWING 2/22/2013

MARK	DATE	DESCRIPTION
1	02/22/2013	ADDENDUM 1
	02/06/2013	BID DOCUMENT

PROJECT NUMBER:	44288-C
DESIGNED BY:	M. BORGEL
DRAWN BY:	F. CUOCCIO
FIELD CHECK:	
APPROVED:	

SHEET TITLE: GENERAL NOTES

DRAWING NUMBER: G-002

GENERAL CONCRETE REPAIR NOTES:

1. ACCEPTABLE CONCRETE REMOVAL METHODS INCLUDE CHIPPING (15 LB MAXIMUM CHIPPING HAMMERS), HYDRO DEMOLITION AND SCARIFICATION. THE CONTRACTOR SHALL TAKE NOTE OF THE RESTRICTIVE WORKING AREA. CONTRACTOR SHALL NOT DAMAGE ANY INFRASTRUCTURE THAT IS TO REMAIN, INCLUDING BUT NOT LIMITED TO STANCHIONS, ELECTRICAL OR TELECOMMUNICATION LINES, PIPES AND PIPE INSULATION DURING REMOVAL. SHIELDING OF PIPES AND INSULATION IS NECESSARY TO PERFORM WORK.

2. THE CONCRETE REMOVAL PROCESS SHALL PRODUCE A SURFACE THAT IS ROUGHENED WITH AN OPEN PORE STRUCTURE TO PROMOTE BONDING OF FRESH CONCRETE. THE SURFACE SHALL BE HYDRO OR ABRASIVELY BLASTED TO PROVIDE A CLEAN SURFACE PROFILE. CONCRETE SHALL BE FREE OF CORROSION, OILS, DIRT, AND ANY OTHER FOREIGN CONTAMINANTS PRIOR TO CONCRETE PLACEMENT.

3. WHERE A MINIMUM OF 3/4" OF CONCRETE COVER CANNOT BE OBTAINED WITH THE ORIGINAL WALL PROFILE, PROVIDE 1 ½" BEYOND THE ORIGINAL WALL PROFILE. SEE DETAIL 4 ON DWG. NO. S-501, CONCRETE REPAIR WITH ADDITIONAL COVER.

4. CONTRACTOR SHALL TAKE THE NECESSARY ACTIONS TO ENSURE THAT SURROUNDING CONCRETE SURFACE IS NOT DAMAGED DURING JOINT REPLACEMENT.

5. BARS SHALL BE REPLACED IN KIND WHEN LESS THAN 75% OF ORIGINAL BAR DIAMETER IS PRESENT.

6. ALL CONCRETE REPAIR DETAILS ON DWG. NO. S-501 SHALL HAVE BIRDMOUTH CUTS ON THE BOTTOM AND SIDE LIMITS FOR REPAIR.

REINFORCEMENT SCHEDULE

BAR SIZE	ORIGINAL BAR DIAMETER, IN.	IF LESS THAN DIAMETER BELOW ADD BAR IN KIND	WELD SPLICE 1-SIDED FLARE V-GROOVE, MIN. LENGTH PER SPLICE LOCATION, INCHES
3	0.375	0.2813	7
4	0.500	0.3750	6
5	0.625	0.4688	5
6	0.750	0.5625	4
7	0.875	0.6563	3.5
8	1.000	0.750	3

GENERAL CRACK REPAIR NOTES:

1. CRACK REPAIR BY EPOXY INJECTION SHALL BE USED WHEN THE CRACK IS LESS THAN 1/32" WIDE AND GREATER THAN 1/64" AND FREE OF VISIBLE SIGNS OF LEAKING. CRACK REPAIR BY URETHANE INJECTION SHALL BE USED WHEN THE CRACK IS GREATER THAN 1/32" WIDE AND/OR WHERE THERE ARE VISIBLE SIGNS OF LEAKING.

1 2. WHERE THE CRACK REPAIR IS LESS THAN 1/32" WIDE AND HAS VISIBLE SIGNS OF LEAKING. THE CONCRETE SURFACE WITH CRACK SHALL BE REMOVED TO A LIMIT OF 3" BEYOND THE CRACK IN EACH DIRECTION. THE DEPTH OF REMOVAL SHALL BE TO THE DEPTH OF THE CRACK BUT NOT GREATER THAN HALF THE CONCRETE WALL THICKNESS. SEE CONCRETE REPAIR 3 ON DWG. NO. S-501.

GENERAL FLOOR DRAIN GROUTING NOTES:

1. TEN (10) FLOOR DRAINS SHALL BE GROUTED TO TAKE THEM OUT OF SERVICE AT THE FOLLOWING LOCATIONS: 1

TUNNEL A:
A0+00±
A6+69±
A21+00±
A38+76±
A45+50±

TUNNEL G:
G2+78±

TUNNEL H:
H3+45± (VIF)

TUNNEL I:
I0+50±

TUNNEL L:
@ BUILDING NO. 136 FACE

TUNNEL O':
O'3+82±

2. THE EXISTING FLOOR DRAIN SHALL BE CLEANED IN PREPARATION FOR GROUT PLACEMENT.

3. VISUAL INSPECTION OF DRAIN PIPE SHALL BE PERFORMED PRIOR TO GROUTING TO DETERMINE IF THE DRAIN PIPE CONNECTS TO OTHER WORKING DRAINS.

4. BASED ON VISUAL INSPECTION PLACE A PLUG IN FLOOR DRAIN PIPE AT THE PREDETERMINED EN LOCATIONS TO PROVIDE A MIN. LENGTH OF GROUTED PIPE OF 5 FEET OR AT THE TIE IN LOCATION AND SO AS NOT TO PLUG ANY CONNECTED ACTIVE PIPING.

5. THE DRAIN SHALL BE SEALED SO THAT NO GROUT IS EXPELLED DURING THE CURING PROCESS.

6. THE FLOOR DRAIN SHALL BE GROUTED FLUSH WITH THE SURROUNDING AREA.

GENERAL SUMP PUMP PITS NOTES:

1 1. PROVIDE SUMP PUMP PITS AT THE FOLOWING LOCATIONS:

TUNNEL A:
A6+43
A21+00
A49+75

TUNNEL D:
D2+30

TUNNEL P:
P2+58

GENERAL STAIR REPAIR NOTES:

1. PROVIDE STRUCTURES AT THE FOLLOWING LOCATIONS:

TUNNEL A:
A32+19±
A47+20±

TUNNEL K:
K2+96±

GENERAL TELECOMMUNICATION CABLE NOTES:

1. LOCATIONS, EXISTING COMMUNICATIONS CABLE SHALL BE RE-ATTACHED TO THE TUNNEL WALL AT APPROXIMATELY THE SAME HEIGHT AS THE EXISTING ATTACHMENT SYSTEM AS DIRECTED BY DIRECTOR'S REPRESENTATIVE. RE-ATTACH THE COMMUNICATIONS CABLES USING AN UNISTRUT J1230N (PLASTIC COATED) "J" CONDUIT AND PIPE HANGER (VERIFY SIZE IN FIELD) SPACED AT 3'-0" OR AN APPROVED EQUAL.

TUNNEL A:
A21+20 TO A23+00
A52+83 TO A54+50

GENERAL TEMPORARY SHORING NOTES:

1. TEMPORARY SHORING OF THE TUNNEL ROOF IS REQUIRED BETWEEN THE FOLLOWING STATIONS IN THE EXPANSION LOOPS WHEN WORK IS BEING PERFORMED ON THE CENTER TUNNEL A DIVIDING WALL:

A9+25 TO A9+99

A20+19 TO A21+71

A25+50 TO A26+50

A37+40 TO A38+80

A54+40 TO A56+10

2. THE TUNNEL OVERBURDEN IS ESTIMATED TO BE 5'-0". CONTRACTOR TO FIELD VERIFY.

GENERAL SECURITY GATES NOTES:

1. THERE ARE SECURITY GATES AT STATION A45+50.5 AND A45+68.

2. THE SECURITY GATES RESTRICT ACCESS TO SECTIONS OF TUNNEL A AND TUNNEL K.

3. THE TUNNEL SYSTEM SHALL BE MAINTAINED SECURED AT ALL TIMES IN ACCORDANCE WITH THE FACILITY SECURITY REQUIREMENTS, AND AS ORDERED BY THE DIRECTOR'S REPRESENTATIVE.

*SEE SPECIFICATION 055100 FOR LADDER REQUIREMENTS.

MANHOLE AND VAULT REPAIR/RECONSTRUCTION SCHEDULE

MANHOLE/ VAULT NO.	TUNNEL LOCATION	STATION	PROVIDE VENTILATION CAP	PROVIDE PERFORATED PLATE AND HOLD DOWN BAR	RAISE RIM ELEVATION	RECONSTRUCT MANHOLE RISER	REPLACE VAULT ACCESS DOORS AND FRAMES	RECONSTRUCT VAULT RISER	*ACCESS LADDER REPLACEMENT	DETAIL REFERENCE
8	P	6+33		X	X					1,3/S-504
7	P	2+06		X		X				1/S-502
9	A	56+14			X				X	1/S-504
11	A	52+83					X			1,5/S-505 1,2 & 3/S-506
13	A	45+81.5					X		X	1,5/S-505 1,2 & 3/S-506
15	A	42+92.5				X			X	1/S-502
16	A	38+82.5					X		X	1,5/S-505 1,2 & 3/S-506
17	A	34+48							X	–
18	A	28+83.5				X				1/S-503
22	A	20+18.5			X		X	X	X	1/S-505, 3/S-506, 1/S-507, 1/S-508
23	A	16+21					X	X	X	1/S-505, 3/S-506, 1/S-507, 1/S-508
24	A	12+67.5					X			1,5/S-505 1,2 & 3/S-506
25	A	10+60							X	–
26	A	6+73	X							1,3/S-504
27	A	4+20					X			1,5/S-505 1,2 & 3/S-506
30	A	0+3					X			1,5/S-505 1,2 & 3/S-506

NYS OFFICE OF GENERAL SERVICES
Serving New York
ANDREW M. CUOMO
Governor
ROANN M. DESTITO
Commissioner

CONSULTANT

GPI
GREENMAN-PEDERSEN, INC.
CONSULTING ENGINEERS
80 WOLF ROAD, SUITE 300
ALBANY, NY 12205
TEL: (518) 453-9431
FAX: (518) 453-9458
WWW.GPINET.COM

WARNING:
THE ALTERATION OF THIS MATERIAL IN ANY WAY, UNLESS DONE UNDER THE DIRECTION OF A COMPARABLE PROFESSIONAL, I.E. ARCHITECT FOR AN ARCHITECT, ENGINEER FOR AN ENGINEER OR LANDSCAPE ARCHITECT FOR A LANDSCAPE ARCHITECT, IS A VIOLATION OF THE NEW YORK STATE EDUCATION LAW AND/OR REGULATIONS AND IS A CLASS 'A' MISDEMEANOR.

STATE OF NEW YORK · JOHN G. RIZZO · 077511 · LICENSED PROFESSIONAL ENGINEER

CONTRACT:
CONSTRUCTION

TITLE:
REPAIR UNDERGROUND STEAM TUNNELS

LOCATION:
WILLARD DRUG TREATMENT CENTER
7116 COUNTY ROUTE 132
WILLARD, NEW YORK

CLIENT:
DEPARTMENT OF CORRECTIONS AND COMMUNITY SUPERVISION

REVISED DRAWING
2/22/2013

MARK	DATE	DESCRIPTION
1	02/22/2013	ADDENDUM 1
	02/06/2013	BID DOCUMENT

PROJECT NUMBER:	44288-C
DESIGNED BY:	M. BORGEL
DRAWN BY:	F. CUOCCIO
FIELD CHECK:	
APPROVED:	

SHEET TITLE:
GENERAL NOTES

DRAWING NUMBER:
G-003

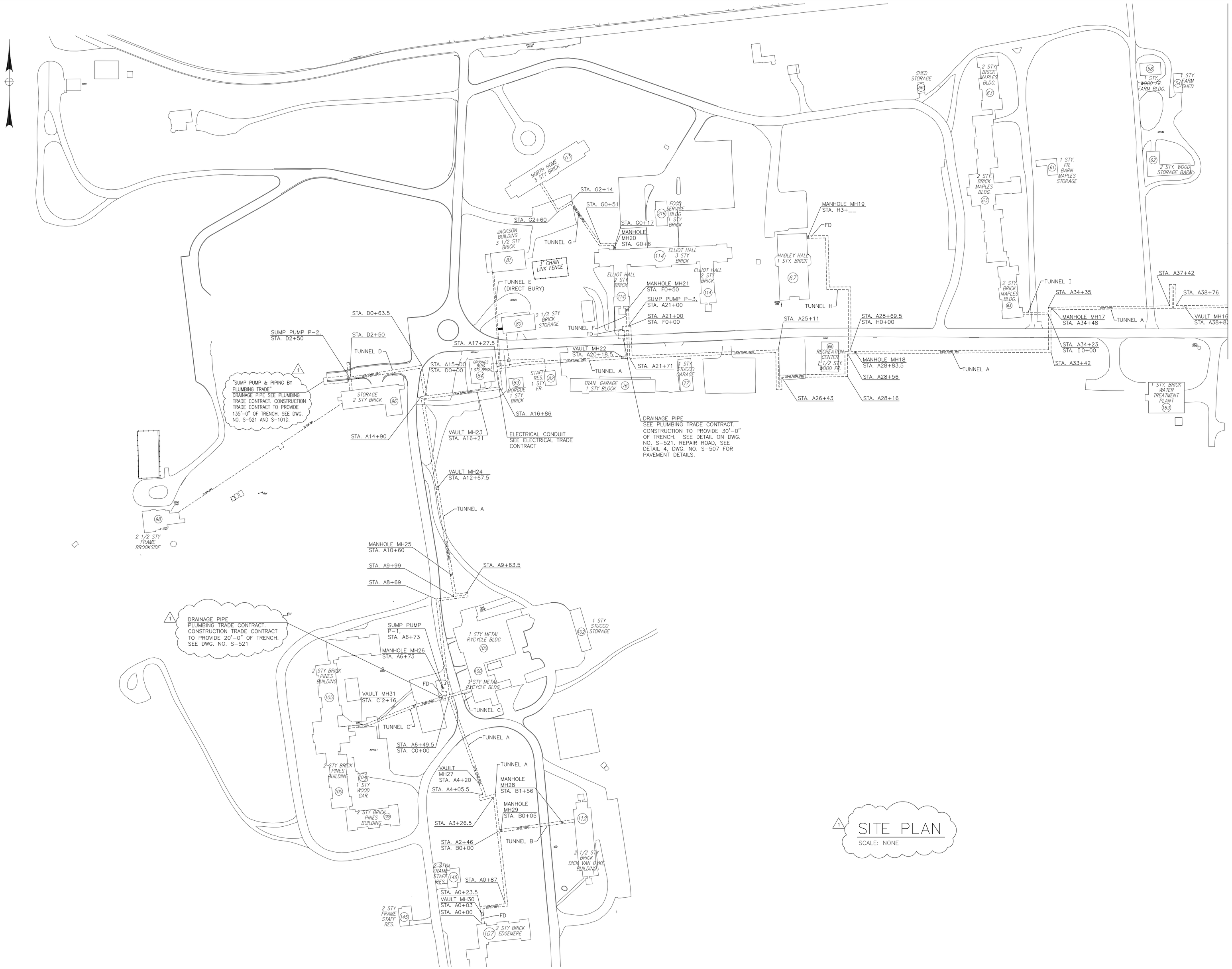

SITE PLAN
SCALE: NONE

NYS OFFICE OF GENERAL SERVICES
Serving New York
ANDREW M. CUOMO
Governor
ROANN M. DESTITO
Commissioner

CONSULTANT

GPI
GREENMAN-PEDERSEN, INC.
CONSULTING ENGINEERS
80 WOLF ROAD, SUITE 300
ALBANY, NY 12205
TEL: (518) 453-9431
FAX: (518) 453-9458
WWW.GPINET.COM

WARNING:
THE ALTERATION OF THIS MATERIAL IN ANY WAY, UNLESS DONE UNDER THE DIRECTION OF A COMPARABLE PROFESSIONAL, I.E. ARCHITECT FOR AN ARCHITECT, ENGINEER FOR AN ENGINEER OR LANDSCAPE ARCHITECT FOR A LANDSCAPE ARCHITECT, IS A VIOLATION OF THE NEW YORK STATE EDUCATION LAW AND/OR REGULATIONS AND IS A CLASS 'A' MISDEMEANOR.

STATE OF NEW YORK · JOHN G. RIZZO · 077511 · LICENSED PROFESSIONAL ENGINEER

CONTRACT:
CONSTRUCTION

TITLE:
REPAIR UNDERGROUND STEAM TUNNELS

LOCATION:
WILLARD DRUG TREATMENT CENTER
7116 COUNTY ROUTE 132
WILLARD, NEW YORK

CLIENT:
DEPARTMENT OF CORRECTIONS AND COMMUNITY SUPERVISION

REVISED DRAWING
2/22/2013

MARK	DATE	DESCRIPTION
1	02/22/2013	ADDENDUM 1
	02/06/2013	BID DOCUMENT

PROJECT NUMBER:	44288-C
DESIGNED BY:	M. BORGEL
DRAWN BY:	F. CUOCCIO
FIELD CHECK:	
APPROVED:	

SHEET TITLE:
SITE PLAN

DRAWING NUMBER:
G-101

SHEET 4 OF 197

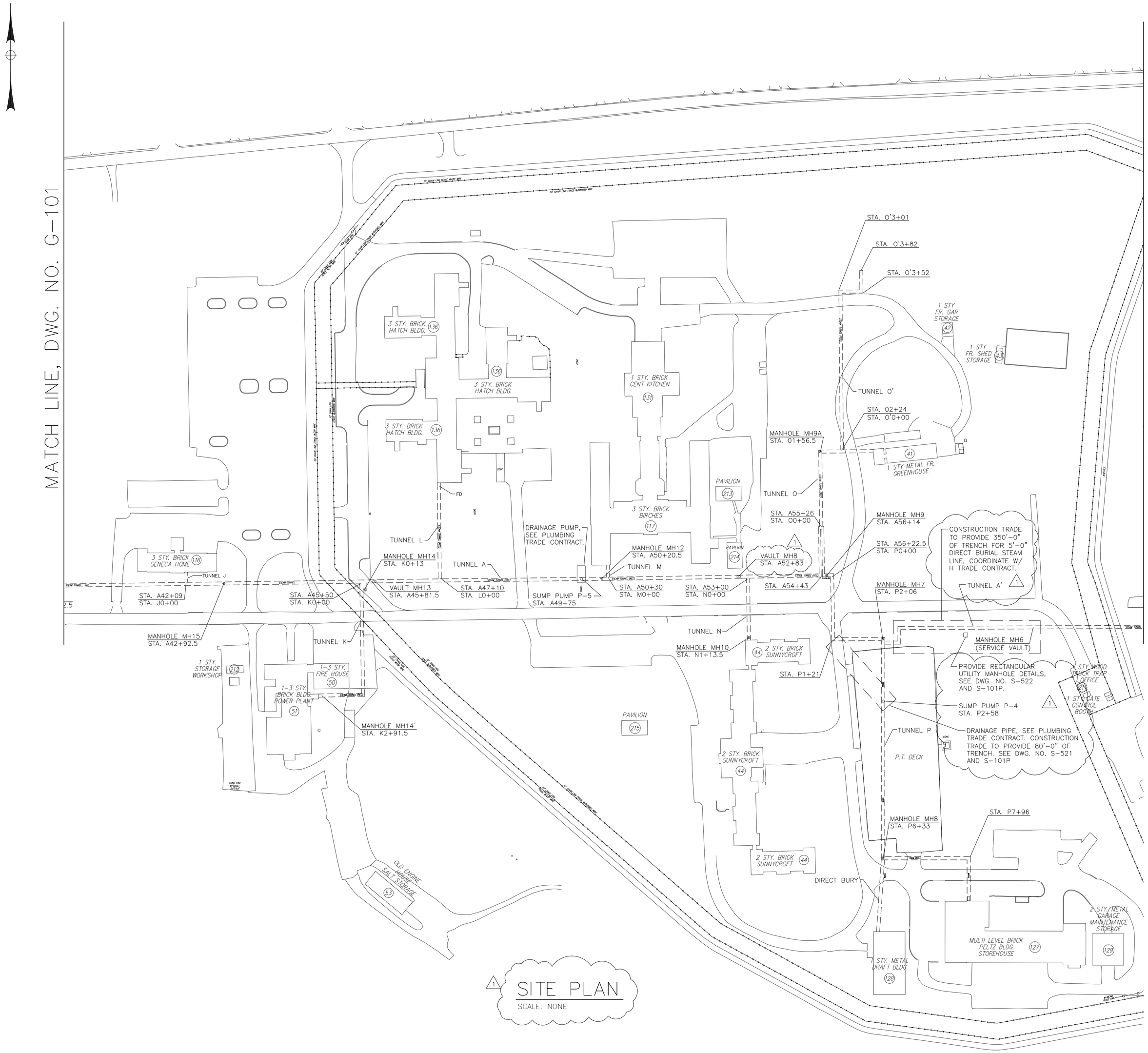

1 SITE PLAN
SCALE: NONE

NYS OFFICE OF GENERAL SERVICES
Serving New York
ANDREW M. CUOMO
Governor
ROANN M. DESTITO
Commissioner

CONSULTANT

GPI
GREENMAN-PEDERSEN, INC.
CONSULTING ENGINEERS
80 WOLF ROAD, SUITE 300
ALBANY, NY 12205
TEL: (518) 453-9431
FAX: (518) 453-9458
WWW.GPINET.COM

WARNING:
THE ALTERATION OF THIS MATERIAL IN ANY WAY, UNLESS DONE UNDER THE DIRECTION OF A COMPARABLE PROFESSIONAL, I.E. ARCHITECT FOR AN ARCHITECT, ENGINEER FOR AN ENGINEER OR LANDSCAPE ARCHITECT FOR A LANDSCAPE ARCHITECT, IS A VIOLATION OF THE NEW YORK STATE EDUCATION LAW AND/OR REGULATIONS AND IS A CLASS 'A' MISDEMEANOR.

STATE OF NEW YORK · JOHN G. RIZZO · 077511 · LICENSED PROFESSIONAL ENGINEER

CONTRACT:
CONSTRUCTION

TITLE:
REPAIR UNDERGROUND STEAM TUNNELS

LOCATION:
WILLARD DRUG TREATMENT CENTER
7116 COUNTY ROUTE 132
WILLARD, NEW YORK

CLIENT:
DEPARTMENT OF CORRECTIONS AND COMMUNITY SUPERVISION

REVISED DRAWING
2/22/2013

MARK	DATE	DESCRIPTION
1	02/22/2013	ADDENDUM 1
	02/06/2013	BID DOCUMENT

PROJECT NUMBER:	44288-C
DESIGNED BY:	M. BORGEL
DRAWN BY:	F. CUOCCIO
FIELD CHECK:	
APPROVED:	

SHEET TITLE:
SITE PLAN

DRAWING NUMBER:
G-102

SHEET 5 OF 197

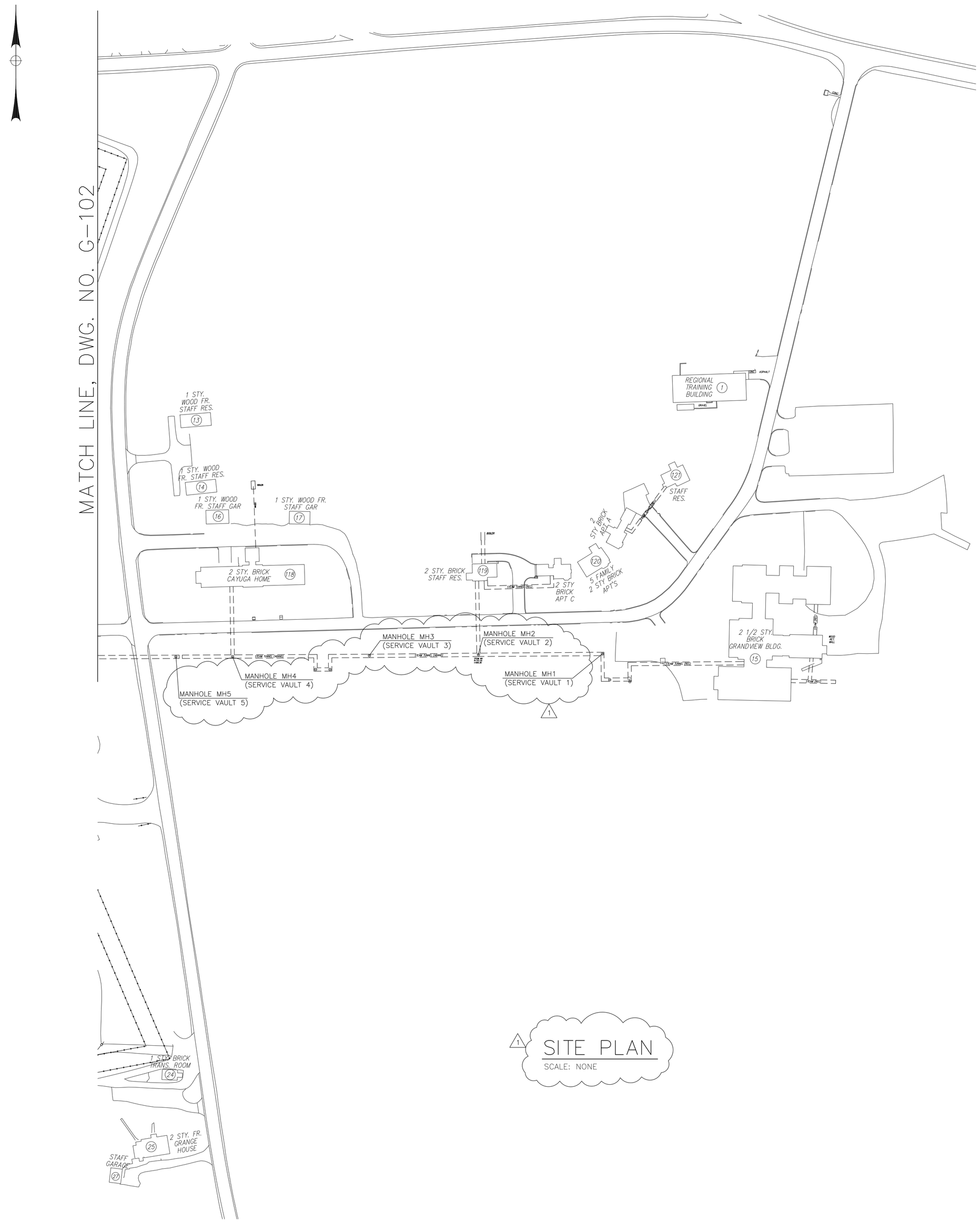

1 SITE PLAN
SCALE: NONE

NYS OFFICE OF GENERAL SERVICES
Serving New York

ANDREW M. CUOMO
Governor
ROANN M. DESTITO
Commissioner

CONSULTANT

GPI
GREENMAN-PEDERSEN, INC.
CONSULTING ENGINEERS
80 WOLF ROAD, SUITE 300
ALBANY, NY 12205
TEL: (518) 453-9431
FAX: (518) 453-9458
WWW.GPINET.COM

WARNING:
THE ALTERATION OF THIS MATERIAL IN ANY WAY, UNLESS DONE UNDER THE DIRECTION OF A COMPARABLE PROFESSIONAL, I.E. ARCHITECT FOR AN ARCHITECT, ENGINEER FOR AN ENGINEER OR LANDSCAPE ARCHITECT FOR A LANDSCAPE ARCHITECT, IS A VIOLATION OF THE NEW YORK STATE EDUCATION LAW AND/OR REGULATIONS AND IS A CLASS 'A' MISDEMEANOR.

STATE OF NEW YORK · JOHN G. RIZZO · 077511 · LICENSED PROFESSIONAL ENGINEER

CONTRACT:
CONSTRUCTION

TITLE:
REPAIR UNDERGROUND STEAM TUNNELS

LOCATION:
WILLARD DRUG TREATMENT CENTER
7116 COUNTY ROUTE 132
WILLARD, NEW YORK

CLIENT:
DEPARTMENT OF CORRECTIONS AND COMMUNITY SUPERVISION

REVISED DRAWING
2/22/2013

MARK	DATE	DESCRIPTION
1	02/22/2013	ADDENDUM 1
	02/06/2013	BID DOCUMENT

PROJECT NUMBER:	44288-C
DESIGNED BY:	M. BORGEL
DRAWN BY:	F. CUOCCIO
FIELD CHECK:	
APPROVED:	

SHEET TITLE:
SITE PLAN

DRAWING NUMBER:
G-103

GENERAL NOTES

1. ABATEMENT CONTRACTOR SHALL PERFORM ALL WORK IN STRICT ACCORDANCE WITH ALL APPLICABLE LOCAL, STATE, AND FEDERAL RULES, REGULATIONS, GUIDELINES, VARIANCES AND THE CONTRACT DOCUMENTS.
2. ALL MATERIAL MEASUREMENTS AND/OR QUANTITIES AND LOCATIONS ARE APPROXIMATE AND FOR GENERAL ORIENTATION ONLY.
3. THE PROVISIONS OF ANY SITE-SPECIFIC VARIANCE(S) OBTAINED BY THE CONTRACTOR MAY NOT BE IMPLEMENTED UNTIL APPROVAL IS GIVEN BY THE DIRECTOR'S REPRESENTATIVE.
4. THE LOCATION OF ANY SITE STORAGE OR MATERIAL, EQUIPMENT, AND WASTE TRAILER/DUMPSTER SHALL BE COORDINATED WITH AND APPROVED BY THE DIRECTOR'S REPRESENTATIVE.
5. CONTRACTOR IS RESPONSIBLE FOR ALL TOOLS, EQUIPMENT, AND SUPPLIES. THE DIRECTOR'S REPRESENTATIVE WILL NOT BE LIABLE FOR THEFT OR DAMAGE.
6. ALL ABATEMENT WORK AND REQUIRED AIR CLEARANCE TESTING SHALL BE COMPLETED PRIOR TO OTHER TRADES ACCESSING THE WORK AREA.
7. ABATEMENT CONTRACTOR SHALL REMOVE AND DISPOSE OF ALL DEBRIS AND ACM CONTAMINATED DEBRIS WHERE ABATEMENT WORK OCCURS WITHIN THE REGULATED WORK AREA.

DECONTAMINATION ENCLOSURE NOTES

1. CONTRACTOR SHALL UTILIZE ATTACHED PERSONAL AND WASTE DECONTAMINATION UNITS IN THE AREA DESIGNATED FOR REMOVAL, IN TUNNEL SEGMENTS BETWEEN ACCESS MANHOLES AND/OR VAULTS. CONTRACTOR SHALL COORDINATE TUNNEL SEGMENTS BETWEEN ACCESS POINTS WITH THE DIRECTOR'S REPRESENTATIVE. SECURITY WALLS SHALL BE INSTALLED AROUND THE DECONTAMINATION UNITS AS ORDERED BY THE DIRECTOR'S REPRESENTATIVE.
2. CONTRACTOR SHALL TRANSPORT WASTE MATERIAL FROM THE WASTE DECONTAMINATION UNITS TO A SECURE WASTE DUMPSTER OR DUMPSTERS LOCATED OUTSIDE THE SECURE PORTION OF THE FACILITY AT A LOCATION ON THE PROPERTY DESIGNATED BY THE DIRECTOR'S REPRESENTATIVE. THE WASTE REMOVAL TIMES SHALL BE COORDINATED WITH THE DIRECTOR'S REPRESENTATIVE.

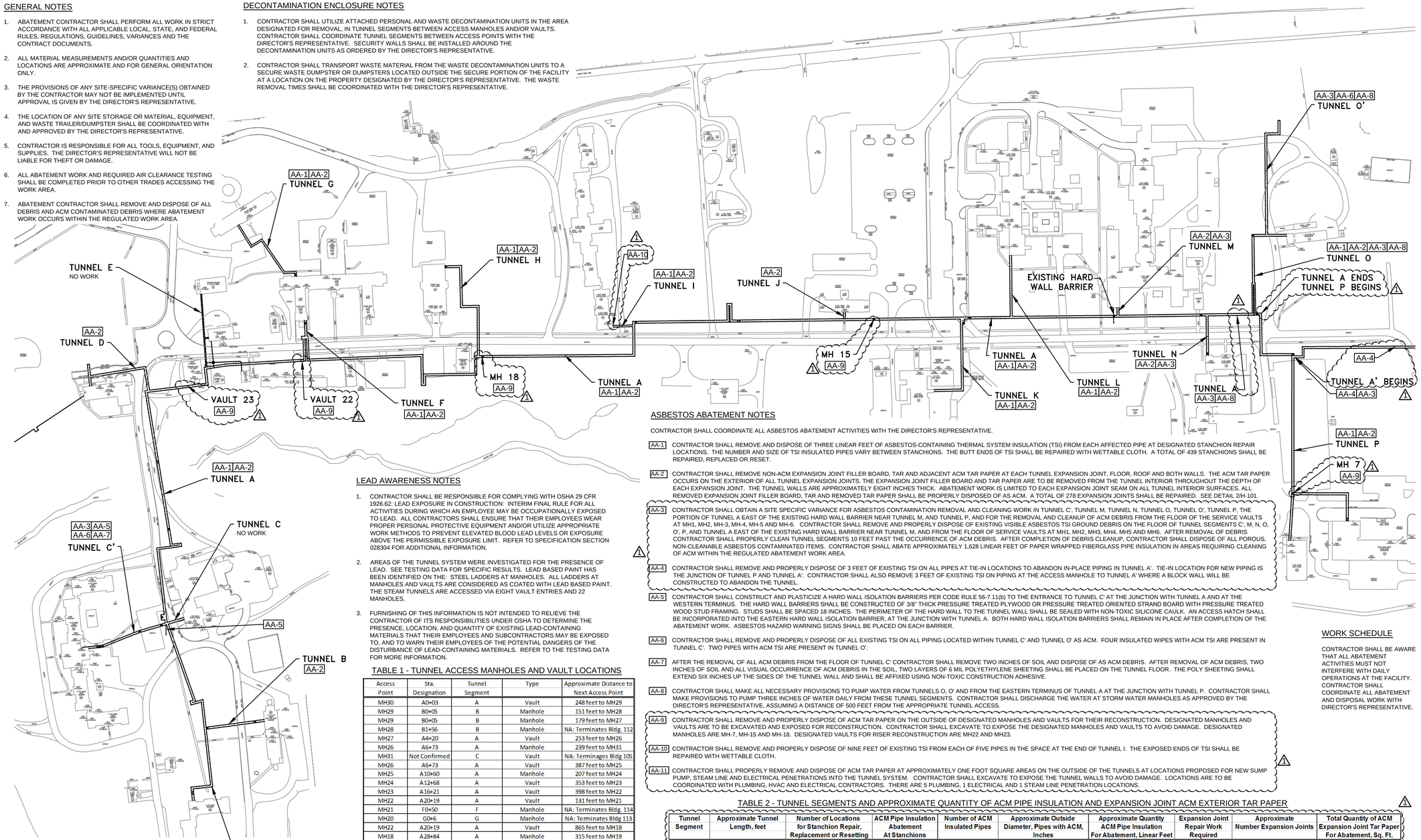

1 H-101 SITE PLAN
SCALE: NTS

LEAD AWARENESS NOTES

1. CONTRACTOR SHALL BE RESPONSIBLE FOR COMPLYING WITH OSHA 29 CFR 1926.62: LEAD EXPOSURE IN CONSTRUCTION: INTERIM FINAL RULE FOR ALL ACTIVITIES DURING WHICH AN EMPLOYEE MAY BE OCCUPATIONALLY EXPOSED TO LEAD. ALL CONTRACTORS SHALL ENSURE THAT THEIR EMPLOYEES WEAR PROPER PERSONAL PROTECTIVE EQUIPMENT AND/OR UTILIZE APPROPRIATE WORK METHODS TO PREVENT ELEVATED BLOOD LEAD LEVELS OR EXPOSURE ABOVE THE PERMISSIBLE EXPOSURE LIMIT. REFER TO SPECIFICATION SECTION 028304 FOR ADDITIONAL INFORMATION.
2. AREAS OF THE TUNNEL SYSTEM WERE INVESTIGATED FOR THE PRESENCE OF LEAD. SEE TESTING DATA FOR SPECIFIC RESULTS. LEAD BASED PAINT HAS BEEN IDENTIFIED ON THE: STEEL LADDERS AT MANHOLES. ALL LADDERS AT MANHOLES AND VAULTS ARE CONSIDERED AS COATED WITH LEAD BASED PAINT. THE STEAM TUNNELS ARE ACCESSED VIA EIGHT VAULT ENTRIES AND 22 MANHOLES.
3. FURNISHING OF THIS INFORMATION IS NOT INTENDED TO RELIEVE THE CONTRACTOR OF ITS RESPONSIBILITIES UNDER OSHA TO DETERMINE THE PRESENCE, LOCATION, AND QUANTITY OF EXISTING LEAD-CONTAINING MATERIALS THAT THEIR EMPLOYEES AND SUBCONTRACTORS MAY BE EXPOSED TO, AND TO WARN THEIR EMPLOYEES OF THE POTENTIAL DANGERS OF THE DISTURBANCE OF LEAD-CONTAINING MATERIALS. REFER TO THE TESTING DATA FOR MORE INFORMATION.

TABLE 1 - TUNNEL ACCESS MANHOLES AND VAULT LOCATIONS

Access Point	Sta. Designation	Tunnel Segment	Type	Approximate Distance to Next Access Point
MH30	A0+03	A	Vault	248 feet to MH29
MH29	B0+05	B	Manhole	151 feet to MH28
MH29	B0+05	B	Manhole	179 feet to MH27
MH28	B1+56	B	Manhole	NA: Terminates Bldg. 112
MH27	A4+20	A	Vault	253 feet to MH26
MH26	A6+73	A	Manhole	239 feet to MH31
MH31	Not Confirmed	C	Vault	NA: Terminages Bldg 105
MH26	A6+73	A	Vault	387 feet to MH25
MH25	A10+60	A	Manhole	207 feet to MH24
MH24	A12+68	A	Vault	353 feet to MH23
MH23	A16+21	A	Vault	398 feet to MH22
MH22	A20+19	A	Vault	131 feet to MH21
MH21	F0+50	F	Manhole	NA: Terminates Bldg. 114
MH20	G0+6	G	Manhole	NA: Terminates Bldg 113
MH22	A20+19	A	Vault	865 feet to MH18
MH18	A28+84	A	Manhole	315 feet to MH19
MH19	H3+1	H	Manhole	NA: Terminates Bldg. 67
MH18	A28+84	A	Manhole	564 feet to MH17
MH17	A34+48	A	Manhole	NA: Terminates Bldg. 63
MH17	A34+48	A	Manhole	435 feet to MH16
MH16	A38+83	A	Vault	410 feet to MH15
MH15	A42+93	A	Manhole	289 feet to MH13
MH13	A45+82	A	Vault	45 feet to MH14
MH14	K0+13	K	Manhole	279 feet to MH14A
MH14A	K2+92	K	Manhole	NA: Terminates Bldg 51
MH13	A45+82	A	Manhole	439 feet to MH12
MH12	A50+21	A	Manhole	262 feet to MH8
MH8	A52+83	A	Vault	131 feet to MH10
MH10	N1+14	N	Manhole	NA: Terminates Bldg. 44
MH8	A52+83	A	Vault	331 feet to MH9
MH9	A56+14	A	Manhole	160 feet to MH9A
MH9A	O1+57	O	Manhole	NA: Terminates Bldg 41
MH9	A56+14	A	Manhole	215 feet to MH7
MH7	P2+06	P	Manhole	427 feet to MH8
MH8	P6+33	P	Manhole	NA:Terminates Bldg. 127
MH6	none	Clay Arch Tunnel System Service Vault only		
MH5	none	Clay Arch Tunnel System Service Vault only		
MH4	none	Clay Arch Tunnel System Service Vault only		
MH3	none	Clay Arch Tunnel System Service Vault only		
MH2	none	Clay Arch Tunnel System Service Vault only		
MH1		Clay Arch Tunnel System Service Vault only		

Vaults are approximately 3 feet X 6 feet.
Manholes are approximately 24 inches in diameter.

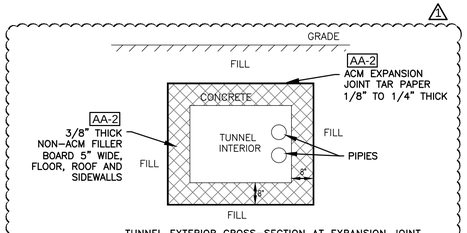

TUNNEL EXTERIOR CROSS-SECTION AT EXPANSION JOINT

2 H-101 DETAIL 1
SCALE: NTS

ASBESTOS ABATEMENT NOTES

CONTRACTOR SHALL COORDINATE ALL ASBESTOS ABATEMENT ACTIVITIES WITH THE DIRECTOR'S REPRESENTATIVE.

AA-1 CONTRACTOR SHALL REMOVE AND DISPOSE OF THREE LINEAR FEET OF ASBESTOS-CONTAINING THERMAL SYSTEM INSULATION (TSI) FROM EACH AFFECTED PIPE AT DESIGNATED STANCHION REPAIR LOCATIONS. THE NUMBER AND SIZE OF TSI INSULATED PIPES VARY BETWEEN STANCHIONS. THE BUTT ENDS OF TSI SHALL BE REPAIRED WITH WETTABLE CLOTH. A TOTAL OF 439 STANCHIONS SHALL BE REPAIRED, REPLACED OR RESET.

AA-2 CONTRACTOR SHALL REMOVE NON-ACM EXPANSION JOINT FILLER BOARD, TAR AND ADJACENT ACM TAR PAPER AT EACH TUNNEL EXPANSION JOINT, FLOOR, ROOF AND BOTH WALLS. THE ACM TAR PAPER OCCURS ON THE EXTERIOR OF ALL TUNNEL EXPANSION JOINTS. THE EXPANSION JOINT FILLER BOARD AND TAR PAPER ARE TO BE REMOVED FROM THE TUNNEL INTERIOR THROUGHOUT THE DEPTH OF EACH EXPANSION JOINT. THE TUNNEL WALLS ARE APPROXIMATELY EIGHT INCHES THICK. ABATEMENT WORK IS LIMITED TO EACH EXPANSION JOINT SEAM ON ALL TUNNEL INTERIOR SURFACES. ALL REMOVED EXPANSION JOINT FILLER BOARD, TAR AND REMOVED TAR PAPER SHALL BE PROPERLY DISPOSED OF AS ACM. A TOTAL OF 278 EXPANSION JOINTS SHALL BE REPAIRED. SEE DETAIL 2/H-101.

AA-3 CONTRACTOR SHALL OBTAIN A SITE SPECIFIC VARIANCE FOR ASBESTOS CONTAMINATION REMOVAL AND CLEANING WORK IN TUNNEL C', TUNNEL M, TUNNEL N, TUNNEL O, TUNNEL O', TUNNEL P, THE PORTION OF TUNNEL A EAST OF THE EXISTING HARD WALL BARRIER NEAR TUNNEL M, AND TUNNEL P, AND FOR THE REMOVAL AND CLEANUP OF ACM DEBRIS FROM THE FLOOR OF THE SERVICE VAULTS AT MH1, MH2, MH-3, MH-4, MH-5 AND MH-6. CONTRACTOR SHALL REMOVE AND PROPERLY DISPOSE OF EXISTING VISIBLE ASBESTOS TSI GROUND DEBRIS ON THE FLOOR OF TUNNEL SEGMENTS C', M, N, O, O', P, AND TUNNEL A EAST OF THE EXISTING HARD WALL BARRIER NEAR TUNNEL M, AND FROM THE FLOOR OF SERVICE VAULTS AT MH1, MH2, MH3, MH4, MH5 AND MH6. AFTER REMOVAL OF DEBRIS CONTRACTOR SHALL PROPERLY CLEAN TUNNEL SEGMENTS 10 FEET PAST THE OCCURRENCE OF ACM DEBRIS. AFTER COMPLETION OF DEBRIS CLEANUP, CONTRACTOR SHALL DISPOSE OF ALL POROUS, NON-CLEANABLE ASBESTOS CONTAMINATED ITEMS. CONTRACTOR SHALL ABATE APPROXIMATELY 1,628 LINEAR FEET OF PAPER WRAPPED FIBERGLASS PIPE INSULATION IN AREAS REQUIRING CLEANING OF ACM WITHIN THE REGULATED ABATEMENT WORK AREA.

AA-4 CONTRACTOR SHALL REMOVE AND PROPERLY DISPOSE OF 3 FEET OF EXISTING TSI ON ALL PIPES AT TIE-IN LOCATIONS TO ABANDON IN-PLACE PIPING IN TUNNEL A'. TIE-IN LOCATION FOR NEW PIPING IS THE JUNCTION OF TUNNEL P AND TUNNEL A'. CONTRACTOR SHALL ALSO REMOVE 3 FEET OF EXISTING TSI ON PIPING AT THE ACCESS MANHOLE TO TUNNEL A' WHERE A BLOCK WALL WILL BE CONSTRUCTED TO ABANDON THE TUNNEL.

AA-5 CONTRACTOR SHALL CONSTRUCT AND PLASTICIZE A HARD WALL ISOLATION BARRIERS PER CODE RULE 56-7.11(b) TO THE ENTRANCE TO TUNNEL C' AT THE JUNCTION WITH TUNNEL A AND AT THE WESTERN TERMINUS. THE HARD WALL BARRIERS SHALL BE CONSTRUCTED OF 3/8" THICK PRESSURE TREATED PLYWOOD OR PRESSURE TREATED ORIENTED STRAND BOARD WITH PRESSURE TREATED WOOD STUD FRAMING. STUDS SHALL BE SPACED 18 INCHES. THE PERIMETER OF THE HARD WALL TO THE TUNNEL WALL SHALL BE SEALED WITH NON-TOXIC SILICONE CAULK. AN ACCESS HATCH SHALL BE INCORPORATED INTO THE EASTERN HARD WALL ISOLATION BARRIER, AT THE JUNCTION WITH TUNNEL A. BOTH HARD WALL ISOLATION BARRIERS SHALL REMAIN IN PLACE AFTER COMPLETION OF THE ABATEMENT WORK. ASBESTOS HAZARD WARNING SIGNS SHALL BE PLACED ON EACH BARRIER.

AA-6 CONTRACTOR SHALL REMOVE AND PROPERLY DISPOSE OF ALL EXISTING TSI ON ALL PIPING LOCATED WITHIN TUNNEL C' AND TUNNEL O' AS ACM. FOUR INSULATED WIPES WITH ACM TSI ARE PRESENT IN TUNNEL C'. TWO PIPES WITH ACM TSI ARE PRESENT IN TUNNEL O'.

AA-7 AFTER THE REMOVAL OF ALL ACM DEBRIS FROM THE FLOOR OF TUNNEL C' CONTRACTOR SHALL REMOVE TWO INCHES OF SOIL AND DISPOSE OF AS ACM DEBRIS. AFTER REMOVAL OF ACM DEBRIS, TWO INCHES OF SOIL AND ALL VISUAL OCCURRENCE OF ACM DEBRIS IN THE SOIL, TWO LAYERS OF 6 MIL POLYETHYLENE SHEETING SHALL BE PLACED ON THE TUNNEL FLOOR. THE POLY SHEETING SHALL EXTEND SIX INCHES UP THE SIDES OF THE TUNNEL WALL AND SHALL BE AFFIXED USING NON-TOXIC CONSTRUCTION ADHESIVE.

AA-8 CONTRACTOR SHALL MAKE ALL NECESSARY PROVISIONS TO PUMP WATER FROM TUNNELS O, O' AND FROM THE EASTERN TERMINUS OF TUNNEL A AT THE JUNCTION WITH TUNNEL P. CONTRACTOR SHALL MAKE PROVISIONS TO PUMP THREE INCHES OF WATER DAILY FROM THESE TUNNEL SEGMENTS. CONTRACTOR SHALL DISCHARGE THE WATER AT STORM WATER MANHOLES AS APPROVED BY THE DIRECTOR'S REPRESENTATIVE, ASSUMING A DISTANCE OF 500 FEET FROM THE APPROPRIATE TUNNEL ACCESS.

AA-9 CONTRACTOR SHALL REMOVE AND PROPERLY DISPOSE OF ACM TAR PAPER ON THE OUTSIDE OF DESIGNATED MANHOLES AND VAULTS FOR THEIR RECONSTRUCTION. DESIGNATED MANHOLES AND VAULTS ARE TO BE EXCAVATED AND EXPOSED FOR RECONSTRUCTION. CONTRACTOR SHALL EXCAVATE TO EXPOSE THE DESIGNATED MANHOLES AND VAULTS TO AVOID DAMAGE. DESIGNATED MANHOLES ARE MH-7, MH-15 AND MH-18. DESIGNATED VAULTS FOR RISER RECONSTRUCTION ARE MH22 AND MH23.

AA-10 CONTRACTOR SHALL REMOVE AND PROPERLY DISPOSE OF NINE FEET OF EXISTING TSI FROM EACH OF FIVE PIPES IN THE SPACE AT THE END OF TUNNEL I. THE EXPOSED ENDS OF TSI SHALL BE REPAIRED WITH WETTABLE CLOTH.

AA-11 CONTRACTOR SHALL PROPERLY REMOVE AND DISPOSE OF ACM TAR PAPER AT APPROXIMATELY ONE FOOT SQUARE AREAS ON THE OUTSIDE OF THE TUNNELS AT LOCATIONS PROPOSED FOR NEW SUMP PUMP, STEAM LINE AND ELECTRICAL PENETRATIONS INTO THE TUNNEL SYSTEM. CONTRACTOR SHALL EXCAVATE TO EXPOSE THE TUNNEL WALLS TO AVOID DAMAGE. LOCATIONS ARE TO BE COORDINATED WITH PLUMBING, HVAC AND ELECTRICAL CONTRACTORS. THERE ARE 5 PLUMBING, 1 ELECTRICAL AND 1 STEAM LINE PENETRATION LOCATIONS.

WORK SCHEDULE

CONTRACTOR SHALL BE AWARE THAT ALL ABATEMENT ACTIVITIES MUST NOT INTERFERE WITH DAILY OPERATIONS AT THE FACILITY. CONTRACTOR SHALL COORDINATE ALL ABATEMENT AND DISPOSAL WORK WITH DIRECTOR'S REPRESENTATIVE.

TABLE 2 - TUNNEL SEGMENTS AND APPROXIMATE QUANTITY OF ACM PIPE INSULATION AND EXPANSION JOINT ACM EXTERIOR TAR PAPER

Tunnel Segment	Approximate Tunnel Length, feet	Number of Locations for Stanchion Repair, Replacement or Resetting	ACM Pipe Insulation Abatement At Stanchions	Number of ACM Insulated Pipes	Approximate Outside Diameter, Pipes with ACM, Inches	Approximate Quantity ACM Pipe Insulation For Abatement, Linear Feet	Expansion Joint Repair Work Required	Approximate Number Expansion Joints	Total Quantity of ACM Expansion Joint Tar Paper For Abatement, Sq. Ft.
A	5,640	326	YES	4	6, 8, 10, 12	3,912	YES	176	3,055
B	180	0	YES	2	5, 6	0	YES	7	98
C	60	0	NO	0	not applicable	0	NO	0	0
C'	240	0	NO (No stanchions)	4	2, 2, 6, 8	960	NO	0	0
D	250	6	NO	0	not applicable	0	YES	7	98
E	0 (direct bury, no work)	0	NO	0	not applicable	0	NO	0	0
F	60	1	YES	4	2, 4, 4, 6	12	YES	2	28
G	320	15	YES	2	2.5, 2.5	90	YES	7	113
H	305	0	YES	3	6.5, 6.5, 6.5	0	YES	10	141
I	55	0	YES	4	6, 6, 5, 5	0	YES	1	15
J	21	0	YES	3	3, 3, 4	0	YES	1	15
K	300	20	YES	5	4, 6, 10, 16, 16	300	YES	3	141
L	184	11	YES	5	3, 4.5, 5, 10, 10	165	YES	2	96
M	23	0	NO	0	not applicable	0	YES	1	15
N	120	0	NO	0	not applicable	0	YES	4	56
O	243	16	YES	3	3.5, 4, 8,	144	YES	8	113
O'	382	0	YES	2	3, 3	764	YES	13	184
P	885	44	YES	2	4, 5	264	YES	23	342
A'	not applicable	0	NO	Not Applicable	Not Applicable	0	NO	0	0
Total Estimates	9,268 Feet of Tunnel	439 Stanchions	ACM Pipe Insulation In 14 Tunnels			6,611 Linear Feet ACM	Expansion Joints in 15 Tunnels	265 Joints	4,510 Sq. Ft.

1. Quantities based on 3 feet of ACM abatement per pipe at each stanchion designated for repair. Pipe diameters vary from 2" to 16" in diameter.
2. Pipe Diameters do not account for thickness of TSI or canvas wrapping.
3. Quantities based on no ACM TSI on pipes in Tunnels C, D, E (no work), M and N, and no abatement on ACM piping in Tunnel A'. The only abatement in Tunnel A' is for the new piping tie-in and to abandon Tunnel A' in-place.
4. Assumes Tunnel A has an average of 3 pipes with ACM insulation per stanchion location.
5. Assumes 10 expansion joints in Tunnel H, each 21 linear feet.
6. Assumes 8 inches of ACM expansion joint tar paper at each joint.
7. ACM Expansion Joint Tar Paper shall be encountered during the removal of joint filler board. ACM Tar Paper quantity in square feet.

NYS OFFICE OF GENERAL SERVICES
Serving New York
ANDREW M. CUOMO
Governor
ROANN M. DESTITO
Commissioner

CONSULTANT

WATTS ARCHITECTURE & ENGINEERING
95 Perry Street, Suite 300
Buffalo, New York 14203
p: 716.206.5100 f: 716.206.5199

WARNING:
THE ALTERATION OF THIS MATERIAL IN ANY WAY, UNLESS DONE UNDER THE DIRECTION OF A COMPARABLE PROFESSIONAL, i.E. ARCHITECT FOR AN ARCHITECT, ENGINEER FOR AN ENGINEER OR LANDSCAPE ARCHITECT FOR A LANDSCAPE ARCHITECT, IS A VIOLATION OF THE NEW YORK STATE EDUCATION LAW AND/OR REGULATIONS AND IS A CLASS 'A' MISDEMEANOR.

STATE OF NEW YORK · KEVIN P. JANIK · 082957 · LICENSED PROFESSIONAL ENGINEER

CONTRACT:
CONSTRUCTION

TITLE:
REPAIR UNDERGROUND STEAM TUNNELS

LOCATION:
WILLARD DRUG TREATMENT CENTER
7116 COUNTY ROUTE 132
WILLARD, NEW YORK

CLIENT:
DEPARTMENT OF CORRECTIONS AND COMMUNITY SUPERVISION

REVISED DRAWING
2/22/2013

MARK	DATE	DESCRIPTION
1	02/22/2013	REVISION 1
	02/06/2013	BID DOCUMENTS

PROJECT NUMBER: 44288-C
DESIGNED BY: EJ
DRAWN BY: NK
FIELD CHECK:
APPROVED:

SHEET TITLE:
HAZARDOUS MATERIALS REMOVAL PLAN

DRAWING NUMBER:
H-101

SHEET 7 OF 197

1 **SITE PLAN**
SCALE: 1"=200'

0 200' 400'
GRAPHIC SCALE

NYS OFFICE OF GENERAL SERVICES
Serving New York

ANDREW M. CUOMO
Governor
ROANN M. DESTITO
Commissioner

CONSULTANT

GPI
GREENMAN-PEDERSEN, INC.
CONSULTING ENGINEERS
80 WOLF ROAD, SUITE 300
ALBANY, NY 12205
TEL: (518) 453-9431
FAX: (518) 453-9458
WWW.GPINET.COM

WARNING:
THE ALTERATION OF THIS MATERIAL IN ANY WAY, UNLESS DONE UNDER THE DIRECTION OF A COMPARABLE PROFESSIONAL, I.E. ARCHITECT FOR AN ARCHITECT, ENGINEER FOR AN ENGINEER OR LANDSCAPE ARCHITECT FOR A LANDSCAPE ARCHITECT, IS A VIOLATION OF THE NEW YORK STATE EDUCATION LAW AND/OR REGULATIONS AND IS A CLASS 'A' MISDEMEANOR.

STATE OF NEW YORK · STEPHEN CARL SHUE · 092771 · LICENSED PROFESSIONAL ENGINEER
2/21/2013

CONTRACT:
HVAC

TITLE:
REPAIR UNDERGROUND STEAM TUNNELS

LOCATION:
WILLARD DRUG TREATMENT CENTER
7116 COUNTY ROUTE 132
WILLARD, NEW YORK

CLIENT:
DEPARTMENT OF CORRECTIONS AND COMMUNITY SUPERVISION

REVISED DRAWING
2/22/2013

MARK	DATE	DESCRIPTION
1	02/22/2013	ADDENDUM 1
	02/06/2013	BID DOCUMENT

PROJECT NUMBER:	**44288-H**
DESIGNED BY:	SJV
DRAWN BY:	SJV
FIELD CHECK:	
APPROVED:	

SHEET TITLE:
SITE PIPING PLAN

DRAWING NUMBER:
M-101

SHEET 168 OF 197

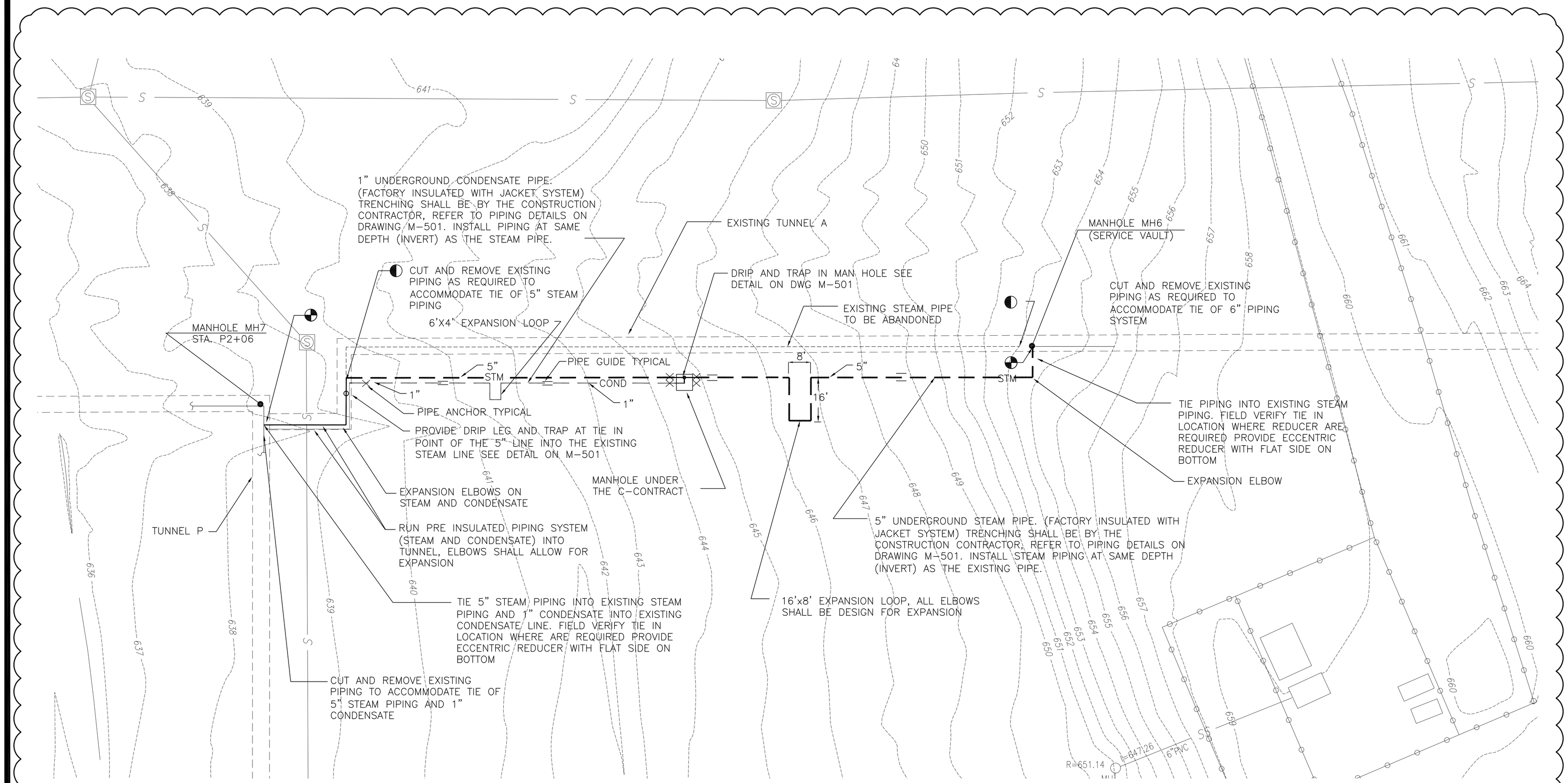

1 STEAM PIPING PLAN

SCALE: 1"=20'

0 20' 40'
GRAPHIC SCALE

NYS OFFICE OF GENERAL SERVICES
Serving New York

ANDREW M. CUOMO
Governor
ROANN M. DESTITO
Commissioner

CONSULTANT

GPI
GREENMAN-PEDERSEN, INC.
CONSULTING ENGINEERS
80 WOLF ROAD, SUITE 300
ALBANY, NY 12205
TEL: (518) 453-9431
FAX: (518) 453-9458
WWW.GPINET.COM

WARNING:
THE ALTERATION OF THIS MATERIAL IN ANY WAY, UNLESS DONE UNDER THE DIRECTION OF A COMPARABLE PROFESSIONAL, I.E. ARCHITECT FOR AN ARCHITECT, ENGINEER FOR AN ENGINEER OR LANDSCAPE ARCHITECT FOR A LANDSCAPE ARCHITECT, IS A VIOLATION OF THE NEW YORK STATE EDUCATION LAW AND/OR REGULATIONS AND IS A CLASS 'A' MISDEMEANOR.

STATE OF NEW YORK · STEPHEN CARL SHEA · 092710 · LICENSED PROFESSIONAL ENGINEER
2/21/2013

CONTRACT: HVAC

TITLE: REPAIR UNDERGROUND STEAM TUNNELS

LOCATION: WILLARD DRUG TREATMENT CENTER
7116 COUNTY ROUTE 132
WILLARD, NEW YORK

CLIENT: DEPARTMENT OF CORRECTIONS AND COMMUNITY SUPERVISION

REVISED DRAWING
2/22/2013

MARK	DATE	DESCRIPTION
1	02/22/2013	ADDENDUM 1
	02/06/2013	BID DOCUMENT

PROJECT NUMBER:	44288-H
DESIGNED BY:	SJV
DRAWN BY:	SJV
FIELD CHECK:	
APPROVED:	

SHEET TITLE: STEAM PIPING PLAN

DRAWING NUMBER: M-102

VALVE INSULATION SCHEDULE				
STATION	SIZE	TYPE	STEAM/CONDENSATE	QTY
B0+00	2 1/2"	OS&Y GATE	STEAM	1
B0+00	2 1/2"	OS&Y GATE	CONDENSATE	1
B0+00	1"	GATE	CONDENSATE	4
A6+60	6"	OS&Y GATE	STEAM	1
A6+60	4"	OS&Y GATE	CONDENSATE	1
A6+60	1"	GATE	CONDENSATE	1
A14+72	10"	OS&Y GATE	STEAM	1
A14+72	6"	OS&Y GATE	CONDENSATE	1
A14+72	1"	GATE	CONDENSATE	1
A14+72	3/4"	GATE	CONDENSATE	1
A14+97	8"	OS&Y GATE	STEAM	1
A14+97	6"	OS&Y GATE	STEAM	1
A14+97	4"	OS&Y GATE	CONDENSATE	1
A17+20	3"	OS&Y GATE	STEAM	2
A18+72	2"	OS&Y GATE	STEAM	1
A18+72	3/4"	GATE	CONDENSATE	1
A34+25.5	6"	OS&Y GATE	STEAM	1
A42+7.5	2 1/2"	OS&Y GATE	STEAM	1

PIPE INSULATION SCHEDULE			
TUNNEL SECTION	SIZE (in,)	PIPE	QTY (lin. ft)
A	6	STEAM	3912
A	8	STEAM	3912
A	10	STEAM	3912
A	12	STEAM	3912
F	2	STEAM	24
F	4	STEAM	48
F	6	STEAM	24
G	2.5	STEAM	180
K	4	STEAM	300
K	6	STEAM	300
K	10	STEAM	300
K	16	STEAM	600
L	3	STEAM	165
L	4	STEAM	165
L	5	STEAM	165
L	10	STEAM	330
O	3	STEAM	144
O	4	STEAM	144
O	8	STEAM	144
P	4	STEAM	264
P	5	STEAM	264
ALL FITTINGS SHALL BE INCLUDED			

1 STEAM VALVE INSULATION PLAN

SCALE: 1"=200'

0 200' 400' GRAPHIC SCALE

NYS OFFICE OF GENERAL SERVICES

Serving New York

ANDREW M. CUOMO, Governor
ROANN M. DESTITO, Commissioner

CONSULTANT

GPI

GREENMAN-PEDERSEN, INC.
CONSULTING ENGINEERS

80 WOLF ROAD, SUITE 300
ALBANY, NY 12205
TEL: (518) 453-9431
FAX: (518) 453-9458
WWW.GPINET.COM

WARNING:
THE ALTERATION OF THIS MATERIAL IN ANY WAY, UNLESS DONE UNDER THE DIRECTION OF A COMPARABLE PROFESSIONAL, I.E. ARCHITECT FOR AN ARCHITECT, ENGINEER FOR AN ENGINEER OR LANDSCAPE ARCHITECT FOR A LANDSCAPE ARCHITECT, IS A VIOLATION OF THE NEW YORK STATE EDUCATION LAW AND/OR REGULATIONS AND IS A CLASS 'A' MISDEMEANOR.

STATE OF NEW YORK · STEPHEN CARL DRUYE · LICENSED PROFESSIONAL ENGINEER · 082710

2/21/2013

CONTRACT: HVAC

TITLE: REPAIR UNDERGROUND STEAM TUNNELS

LOCATION: WILLARD DRUG TREATMENT CENTER, 7116 COUNTY ROUTE 132, WILLARD, NEW YORK

CLIENT: DEPARTMENT OF CORRECTIONS AND COMMUNITY SUPERVISION

REVISED DRAWING 2/22/2013

MARK	DATE	DESCRIPTION
1	02/22/2013	ADDENDUM 1
	02/06/2013	BID DOCUMENT

PROJECT NUMBER: **44288-H**

DESIGNED BY: SJV

DRAWN BY: SJV

FIELD CHECK:

APPROVED:

SHEET TITLE: STEAM VALVE INSULATION PLAN

DRAWING NUMBER: M-103

SHEET 170 OF 197

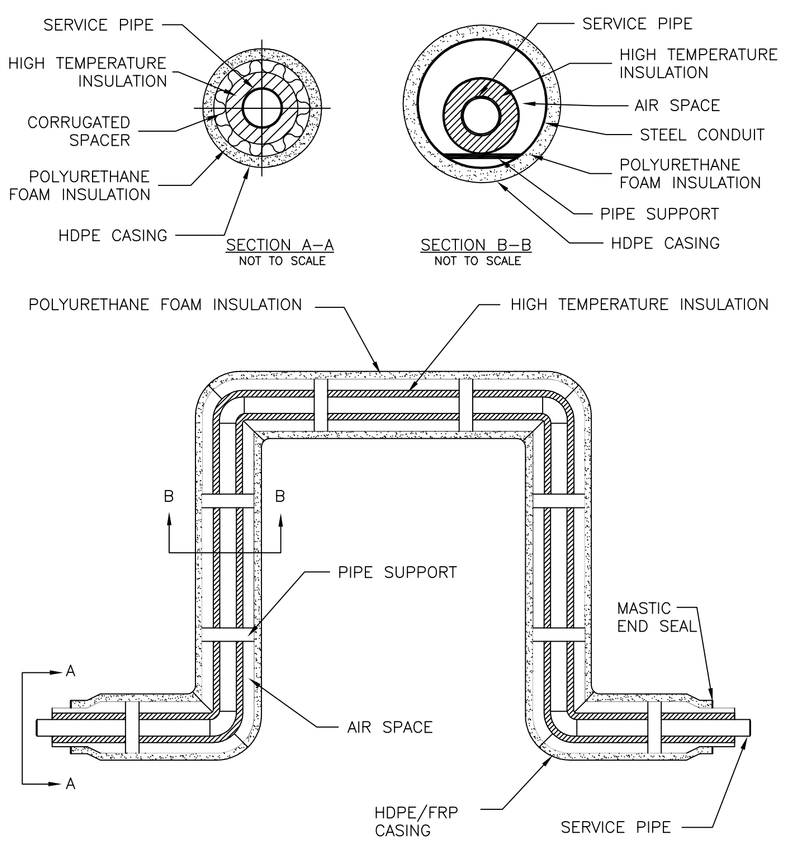

1 EXPANSION LOOP DETAIL

NOT TO SCALE

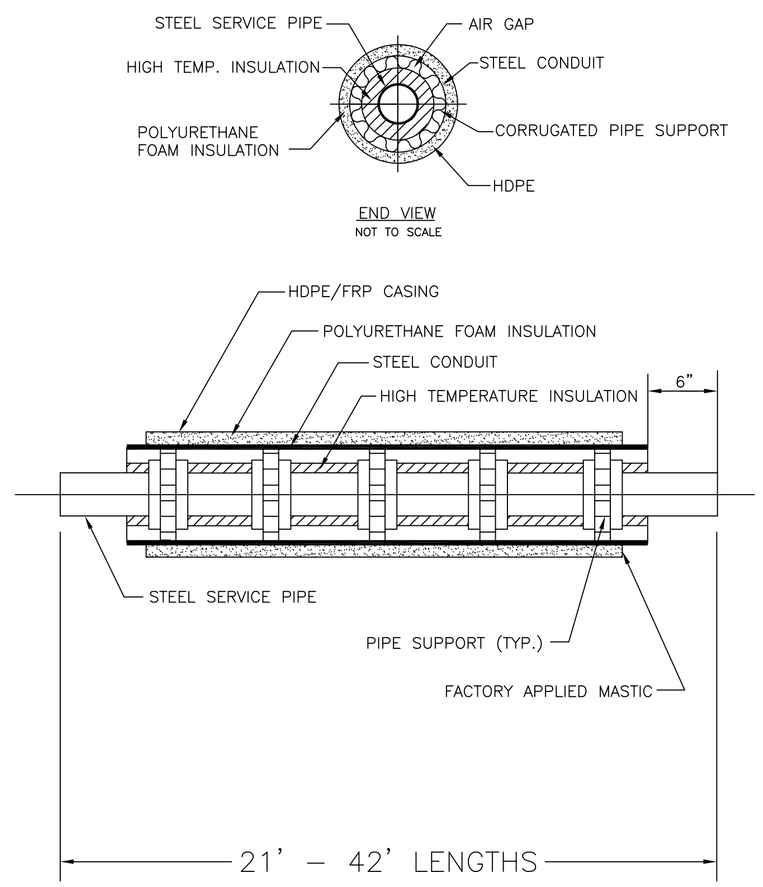

2 TYPICAL PIPING LENGTH DETAIL

NOT TO SCALE

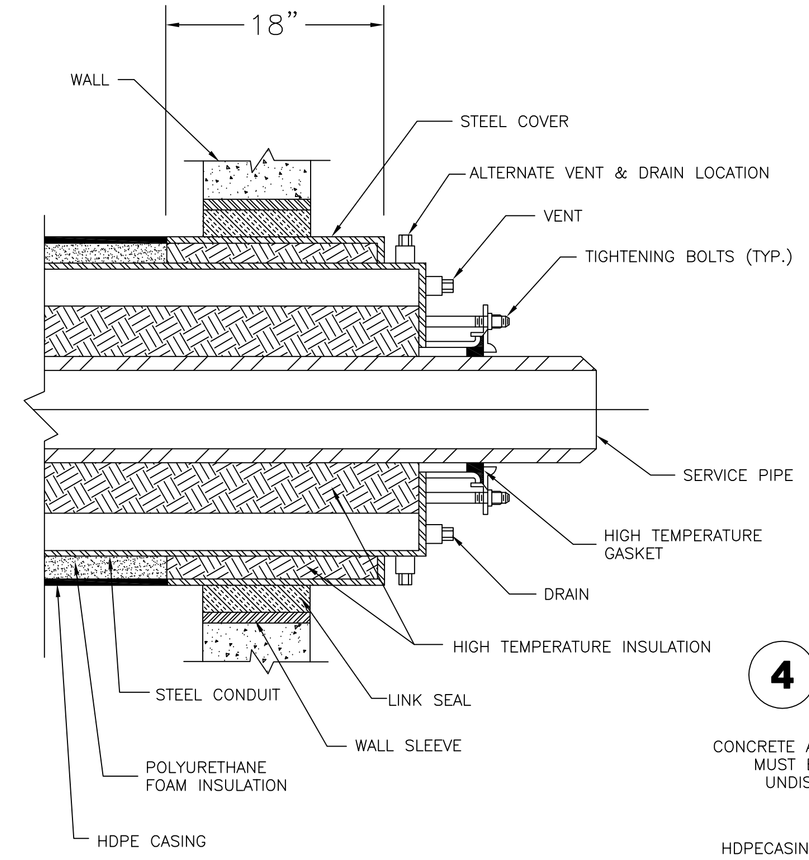

PIPING PENETRATIONS FOR MANHOLE & TUNNEL FOR STEAM & CONDENSATE, COORDINATE ABATEMENT OF EXISTING WATER PROOFING MATERIAL WITH C– CONTRACT.

3 WALL PENETRATION DETAILS

NOT TO SCALE

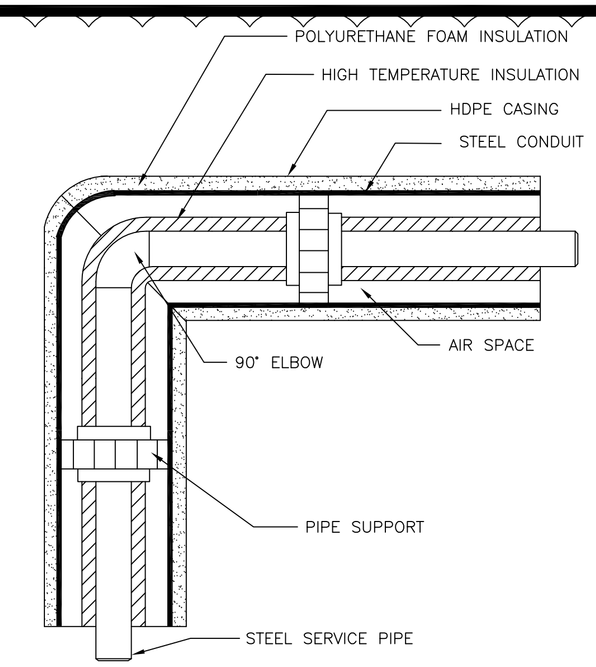

4 TYPICAL ELBOW DETAIL

NOT TO SCALE

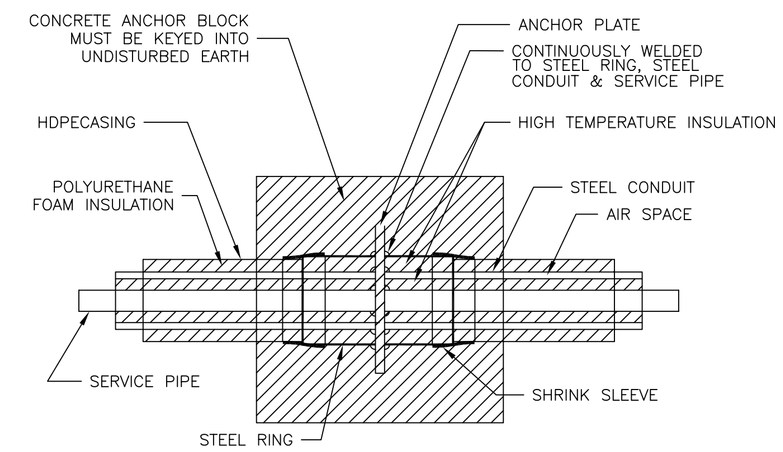

7 ANCHOR DETAIL

NOT TO SCALE

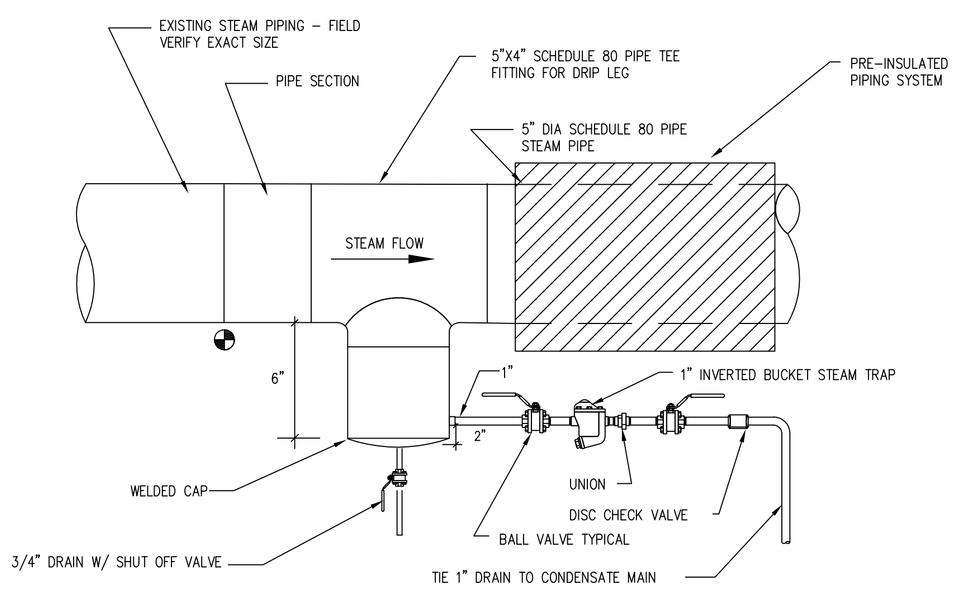

NOTE: ALL SHUT OFF VALVES SHALL BE CARBON STEEL AND CHECK VALVE SHALL BE BRONZE LIFT TYPE MADE BY SPIRAX SARCO OR EQUIVALENT TRAP SHALL BE INVERTED CAST IRON BUCKET SERIES B BY SPIRAX SARCO OR EQUIVALENT

1

LOCATED AT BASE OF STEAM PIPING IN EXISTING TUNNEL

5 DRIP AND TRAP DETAIL

NOT TO SCALE

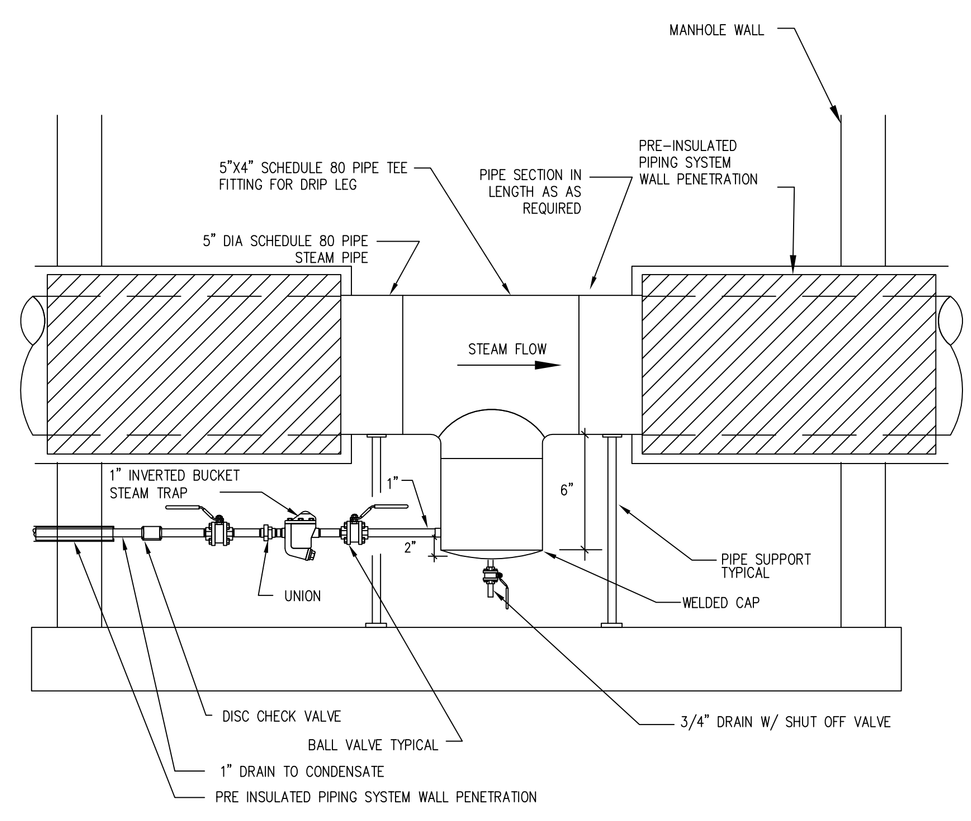

NOTE: ALL SHUT OFF VALVES SHALL BE CARBON STEEL AND CHECK VALVE SHALL BE BRONZE LIFT TYPE MADE BY SPIRAX SARCO OR EQUAL.
TRAP SHALL BE INVERTED CAST IRON BUCKET SERIES B BY SPIRAX SARCO ORE EQUAL

LOCATED AT BASE OF STEAM PIPING IN MAN HOLE, PROVIDE PIPE SUPPORT SADDELS

6 DRIP AND TRAP DETAIL

NOT TO SCALE

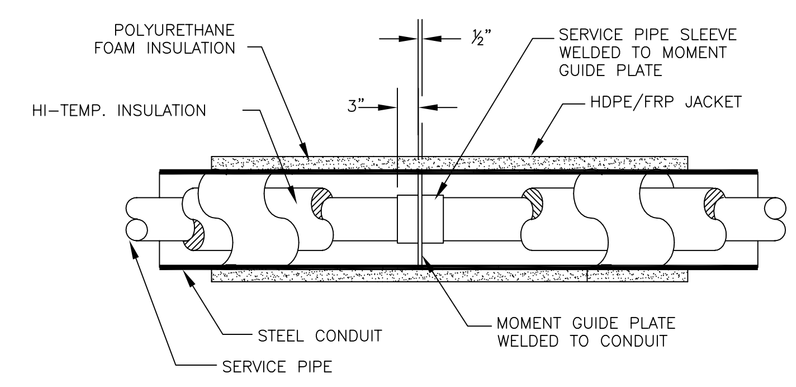

8 GUIDE DETAIL

NOT TO SCALE

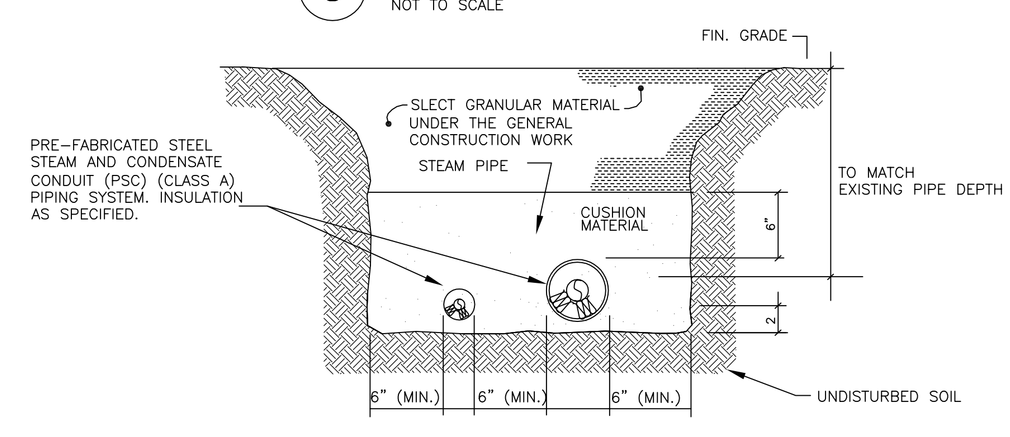

9 TYPICAL CONDUIT TRENCH SECTION

NO SCALE

NOTES:
THE HVAC CONTRACTOR SHALL BE RESPONSIBLE FOR EXCAVATION AND BACKFILLING FOR THE FIRST 5' FROM ANY STRUCTURE (TUNNEL, MANHOLE ETC.)
A MIN. OF THE FIRST 6" OF CUSHION MATERIAL SHALL BE PLATE TAMPED OVER PIPE CONDUITS.
MAINTAIN MIN. 6" CLEARANCE TO EXISTING PIPING AND/OR UTILITIES.

NYS OFFICE OF GENERAL SERVICES
Serving New York
ANDREW M. CUOMO
Governor
ROANN M. DESTITO
Commissioner

CONSULTANT

GPI
GREENMAN-PEDERSEN, INC.
CONSULTING ENGINEERS
80 WOLF ROAD, SUITE 300
ALBANY, NY 12205
TEL: (518) 453–9431
FAX: (518) 453–9458
WWW.GPINET.COM

WARNING:
THE ALTERATION OF THIS MATERIAL IN ANY WAY, UNLESS DONE UNDER THE DIRECTION OF A COMPARABLE PROFESSIONAL, I.E. ARCHITECT FOR AN ARCHITECT, ENGINEER FOR AN ENGINEER OR LANDSCAPE ARCHITECT FOR A LANDSCAPE ARCHITECT, IS A VIOLATION OF THE NEW YORK STATE EDUCATION LAW AND/OR REGULATIONS AND IS A CLASS 'A' MISDEMEANOR.

STATE OF NEW YORK · STEPHEN CARL · 092771 · LICENSED PROFESSIONAL ENGINEER
2/21/2013

CONTRACT: HVAC

TITLE: REPAIR UNDERGROUND STEAM TUNNELS

LOCATION: WILLARD DRUG TREATMENT CENTER
7116 COUNTY ROUTE 132
WILLARD, NEW YORK

CLIENT: DEPARTMENT OF CORRECTIONS AND COMMUNITY SUPERVISION

REVISED DRAWING
2/22/2013

MARK	DATE	DESCRIPTION
1	02/22/2013	ADDENDUM 1
	02/06/2013	BID DOCUMENT

PROJECT NUMBER:	44288-H
DESIGNED BY:	SJV
DRAWN BY:	SJV
FIELD CHECK:	
APPROVED:	SCD

SHEET TITLE: HVAC DETAILS

DRAWING NUMBER: M–501

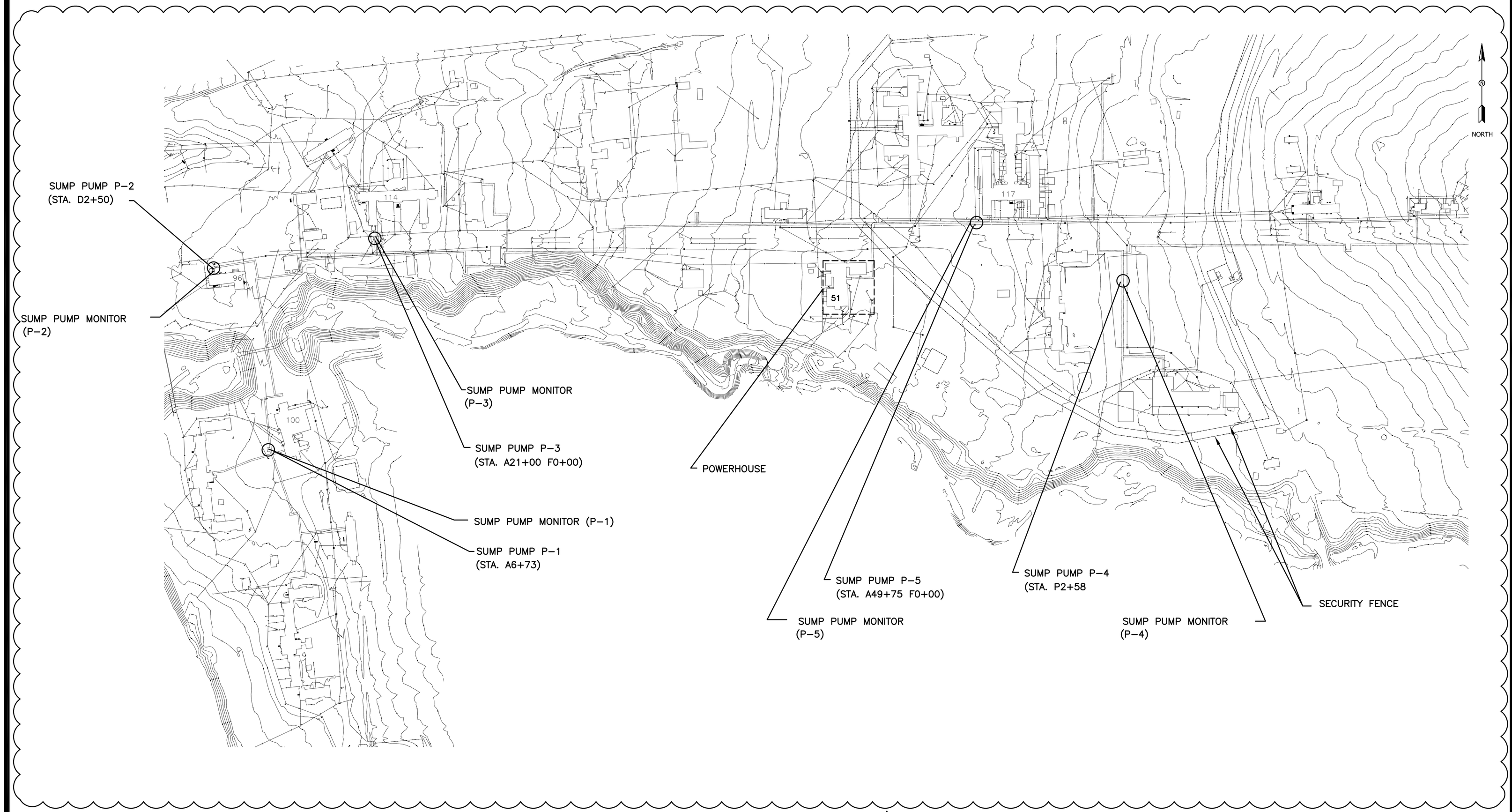

1 SITE PLAN

SCALE: 1"=200'

0 200' 400'

GRAPHIC SCALE

NYS OFFICE OF GENERAL SERVICES

Serving New York

ANDREW M. CUOMO
Governor
ROANN M. DESTITO
Commissioner

CONSULTANT

GPI

GREENMAN-PEDERSEN, INC.
CONSULTING ENGINEERS

80 WOLF ROAD, SUITE 300
ALBANY, NY 12205
TEL: (518) 453-9431
FAX: (518) 453-9458
WWW.GPINET.COM

WARNING:

THE ALTERATION OF THIS MATERIAL IN ANY WAY, UNLESS DONE UNDER THE DIRECTION OF A COMPARABLE PROFESSIONAL, I.E. ARCHITECT FOR AN ARCHITECT, ENGINEER FOR AN ENGINEER OR LANDSCAPE ARCHITECT FOR A LANDSCAPE ARCHITECT, IS A VIOLATION OF THE NEW YORK STATE EDUCATION LAW AND/OR REGULATIONS AND IS A CLASS 'A' MISDEMEANOR.

STATE OF NEW YORK · STEPHEN CARL · 082710 · LICENSED PROFESSIONAL ENGINEER

2/21/2013

CONTRACT:
PLUMBING

TITLE:
REPAIR UNDERGROUND
STEAM TUNNELS

LOCATION:
WILLARD DRUG TREATMENT CENTER
7116 COUNTY ROUTE 132
WILLARD, NEW YORK

CLIENT:
DEPARTMENT OF CORRECTIONS
AND COMMUNITY SUPERVISION

REVISED DRAWING
2/22/2013

MARK	DATE	DESCRIPTION
1	02/22/2013	ADDENDUM 1
	02/06/2013	BID DOCUMENT

PROJECT NUMBER:	**44288-P**
DESIGNED BY:	SJV
DRAWN BY:	SJV
FIELD CHECK:	
APPROVED:	

SHEET TITLE:

SITE PIPING PLAN

DRAWING NUMBER:
P-101

SHEET 173 OF 197

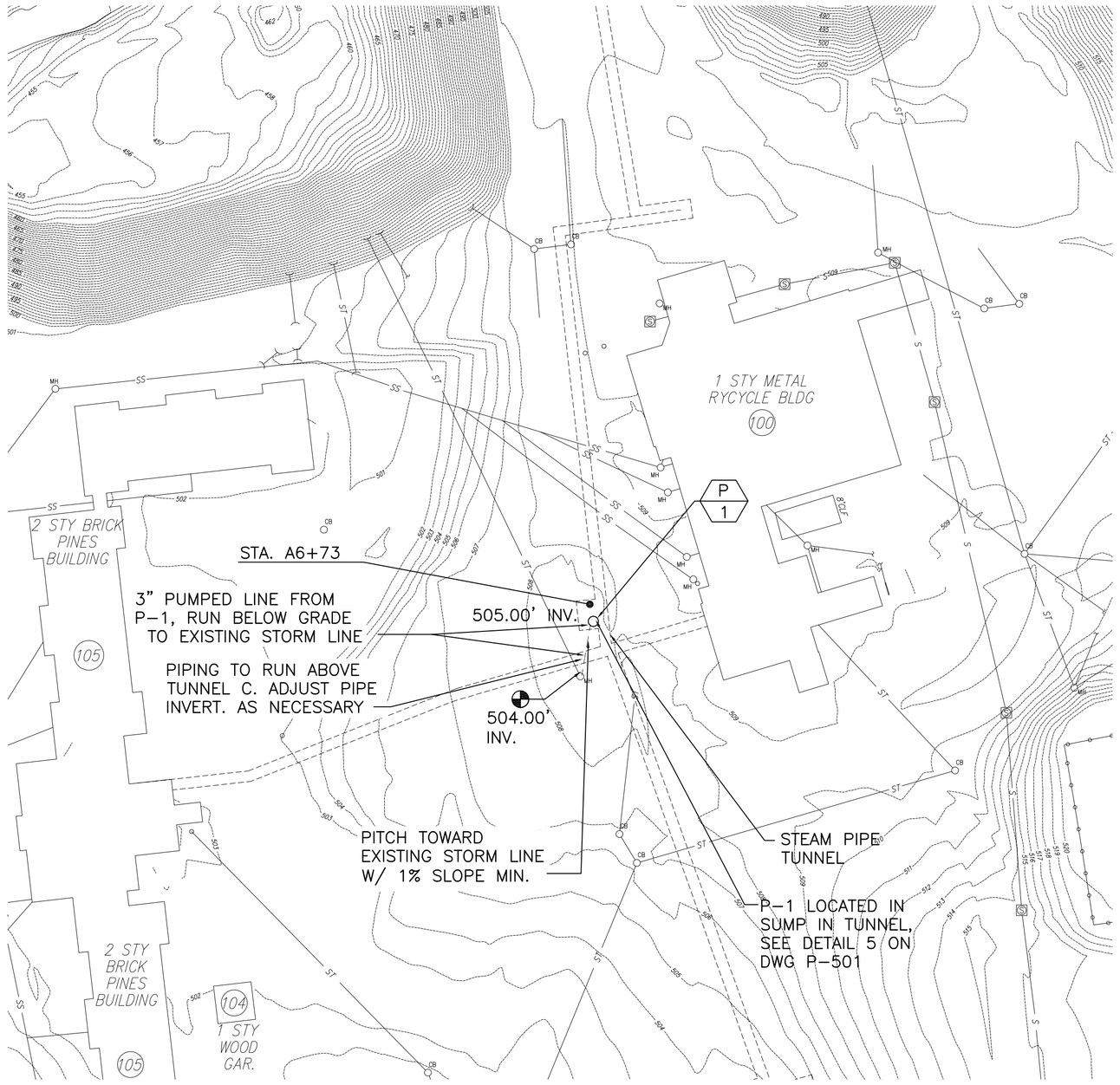

1 SUMP PUMP PLAN - STATION A6+73

SCALE: 1"=50'

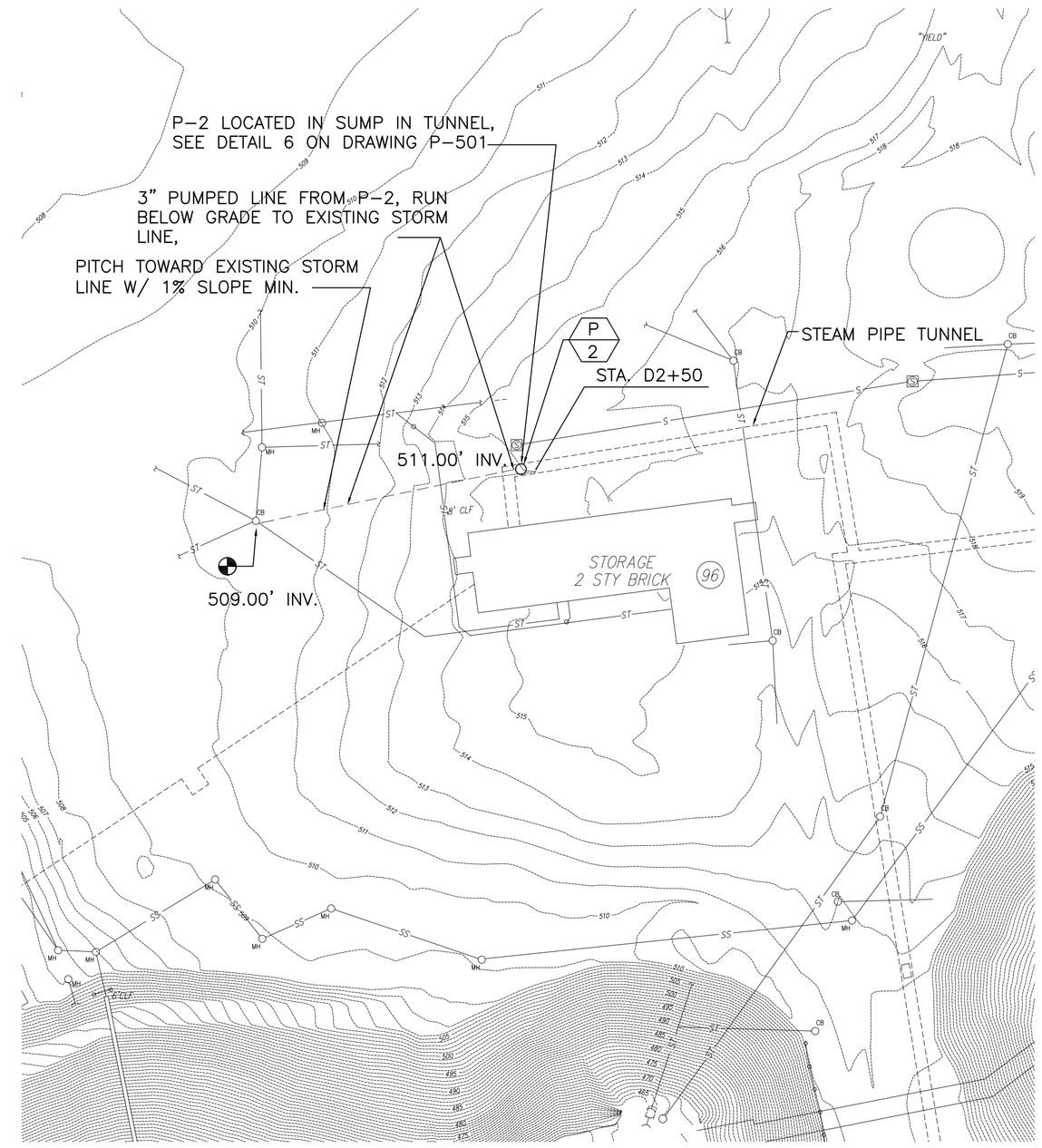

2 SUMP PUMP PLAN - STATION D2+50

SCALE: 1"=50'

1

0 50' 100'

GRAPHIC SCALE

NORTH

NYS OFFICE OF GENERAL SERVICES

Serving New York

ANDREW M. CUOMO
Governor
ROANN M. DESTITO
Commissioner

CONSULTANT

GPI

GREENMAN-PEDERSEN, INC.
CONSULTING ENGINEERS

80 WOLF ROAD, SUITE 300
ALBANY, NY 12205
TEL: (518) 453-9431
FAX: (518) 453-9458
WWW.GPINET.COM

WARNING:

THE ALTERATION OF THIS MATERIAL IN ANY WAY, UNLESS DONE UNDER THE DIRECTION OF A COMPARABLE PROFESSIONAL, I.E. ARCHITECT FOR AN ARCHITECT, ENGINEER FOR AN ENGINEER OR LANDSCAPE ARCHITECT FOR A LANDSCAPE ARCHITECT, IS A VIOLATION OF THE NEW YORK STATE EDUCATION LAW AND/OR REGULATIONS AND IS A CLASS 'A' MISDEMEANOR.

STATE OF NEW YORK · STEPHEN CARL ... · 092710 · LICENSED PROFESSIONAL ENGINEER

2/21/2013

CONTRACT:

PLUMBING

TITLE:

REPAIR UNDERGROUND
STEAM TUNNELS

LOCATION:

WILLARD DRUG TREATMENT CENTER
7116 COUNTY ROUTE 132
WILLARD, NEW YORK

CLIENT:

DEPARTMENT OF CORRECTIONS
AND COMMUNITY SUPERVISION

REVISED DRAWING
2/22/2013

MARK	DATE	DESCRIPTION
1	02/22/2013	ADDENDUM 1
	02/06/2013	BID DOCUMENT

PROJECT NUMBER:	**44288-P**
DESIGNED BY:	SJV
DRAWN BY:	SJV
FIELD CHECK:	
APPROVED:	

SHEET TITLE:

TUNNEL SUMP PUMP
PLANS

DRAWING NUMBER:

P-102

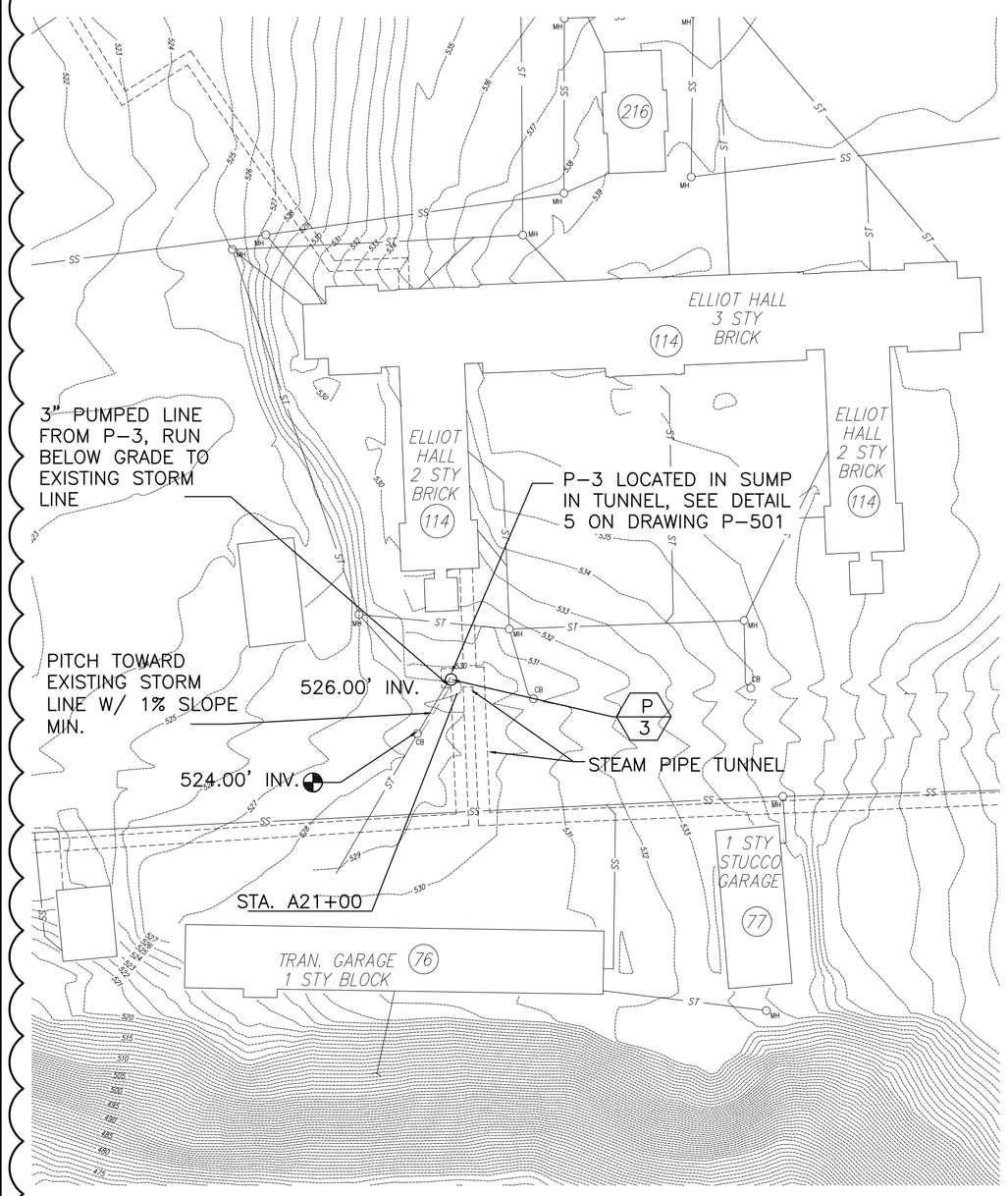

1 **SUMP PUMP PLAN - STATION A21+00**

SCALE: 1"=50'

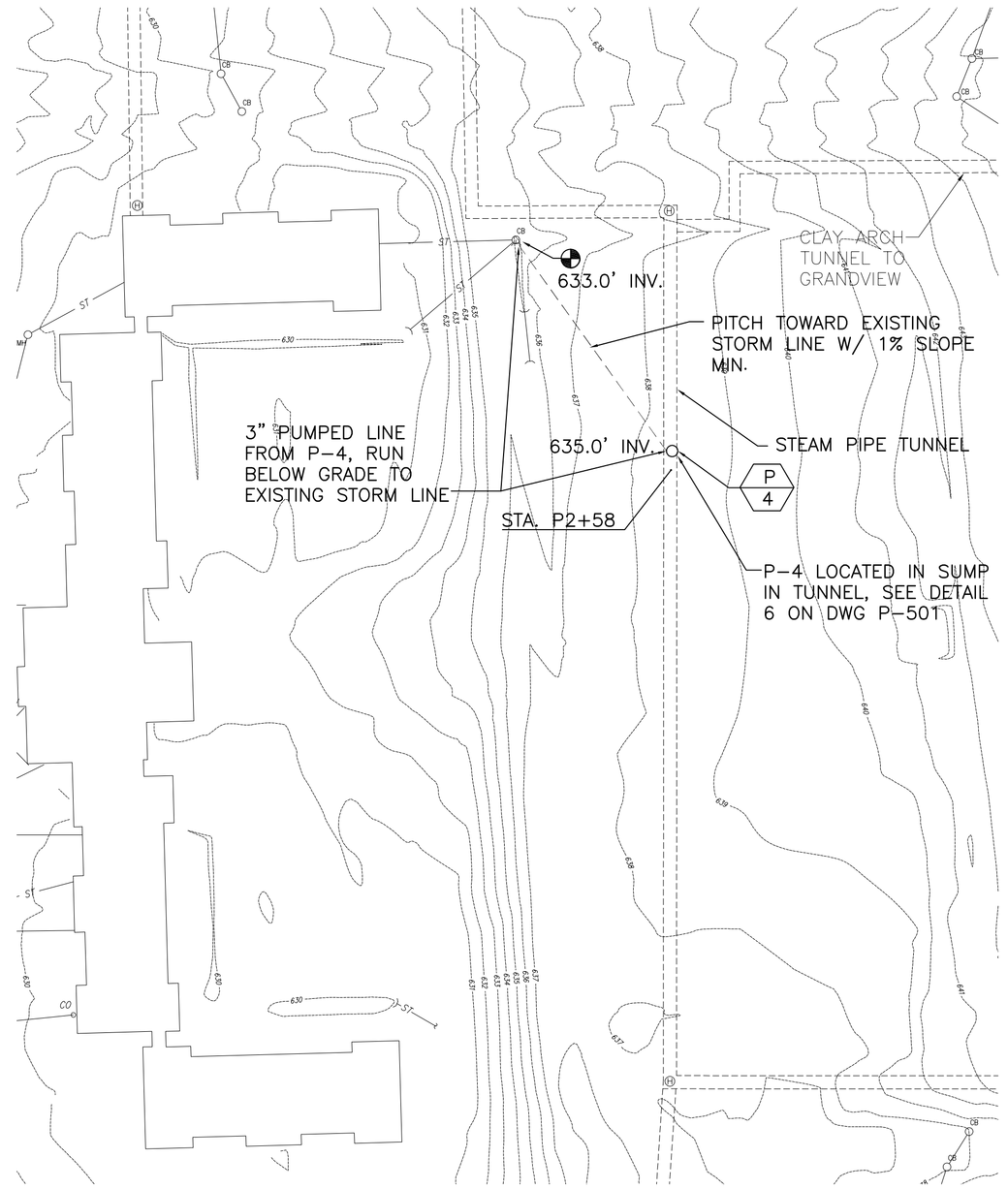

2 **SUMP PUMP PLAN - STATION P2+58**

SCALE: 1"=50'

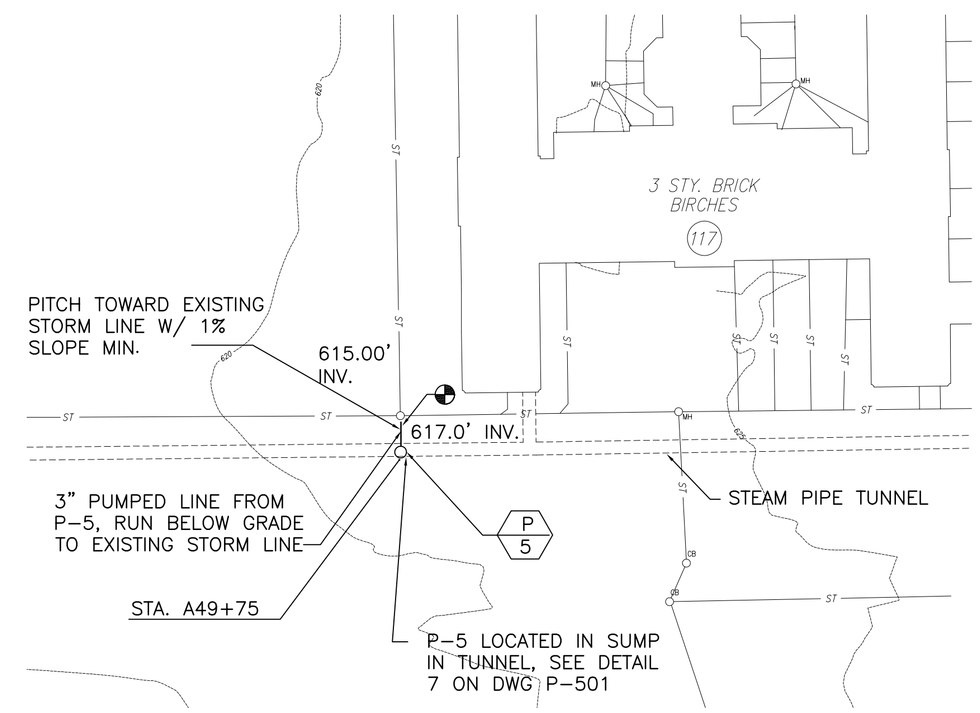

3 **SUMP PUMP PLAN - STATION A49+75**

SCALE: 1"=50'

NORTH

0 50' 100'

GRAPHIC SCALE

NYS OFFICE OF GENERAL SERVICES

Serving New York

ANDREW M. CUOMO
Governor
ROANN M. DESTITO
Commissioner

CONSULTANT

GPI

GREENMAN-PEDERSEN, INC.
CONSULTING ENGINEERS

80 WOLF ROAD, SUITE 300
ALBANY, NY 12205
TEL: (518) 453-9431
FAX: (518) 453-9458
WWW.GPINET.COM

WARNING:

THE ALTERATION OF THIS MATERIAL IN ANY WAY, UNLESS DONE UNDER THE DIRECTION OF A COMPARABLE PROFESSIONAL, I.E. ARCHITECT FOR AN ARCHITECT, ENGINEER FOR AN ENGINEER OR LANDSCAPE ARCHITECT FOR A LANDSCAPE ARCHITECT, IS A VIOLATION OF THE NEW YORK STATE EDUCATION LAW AND/OR REGULATIONS AND IS A CLASS 'A' MISDEMEANOR.

STATE OF NEW YORK · STEPHEN CARL · 082710 · LICENSED PROFESSIONAL ENGINEER

2/21/2013

CONTRACT:
PLUMBING

TITLE:
REPAIR UNDERGROUND
STEAM TUNNELS

LOCATION:
WILLARD DRUG TREATMENT CENTER
7116 COUNTY ROUTE 132
WILLARD, NEW YORK

CLIENT:
DEPARTMENT OF CORRECTIONS
AND COMMUNITY SUPERVISION

REVISED DRAWING
2/22/2013

MARK	DATE	DESCRIPTION
1	02/22/2013	ADDENDUM 1
	02/06/2013	BID DOCUMENT

PROJECT NUMBER:	**44288-P**
DESIGNED BY:	SJV
DRAWN BY:	SJV
FIELD CHECK:	
APPROVED:	

SHEET TITLE:

TUNNEL SUMP PUMP
PLANS

DRAWING NUMBER:
P-103

SHEET 175 OF 197

SUMP PUMP SCHEDULE

TAG	MANUFACTURER	MODEL	QUANTITY	LOCATION	PRESSURE DROP (ft. hd.)	MAXIMUM	GPM	MOTOR H.P.	MOTOR RPM	MOTOR FLA	MOTOR VOLTS	MOTOR PHASE	REMARKS
P-1	MYERS	MDC50	1	STATION A6+40	28	130 F	20	1/2	1550	12	120	1	LONG LENGTH POWER CORD TETHERED FLOAT SWITCH
P-2	MYERS	MDC50	1	STATION D2+50	28	130 F	20	1/2	1550	12	120	1	LONG LENGTH POWER CORD TETHERED FLOAT SWITCH
P-3	MYERS	MDC50	1	STATION A21+00	28	130 F	20	1/2	1550	12	120	1	LONG LENGTH POWER CORD TETHERED FLOAT SWITCH
P-4	MYERS	MDC50	1	STATION P2+06	28	130 F	20	1/2	1550	12	120	1	LONG LENGTH POWER CORD TETHERED FLOAT SWITCH
P-5	MYERS	MDC50	1	STATION A49+75	28	130 F	20	1/2	1550	12	120	1	LONG LENGTH POWER CORD TETHERED FLOAT SWITCH

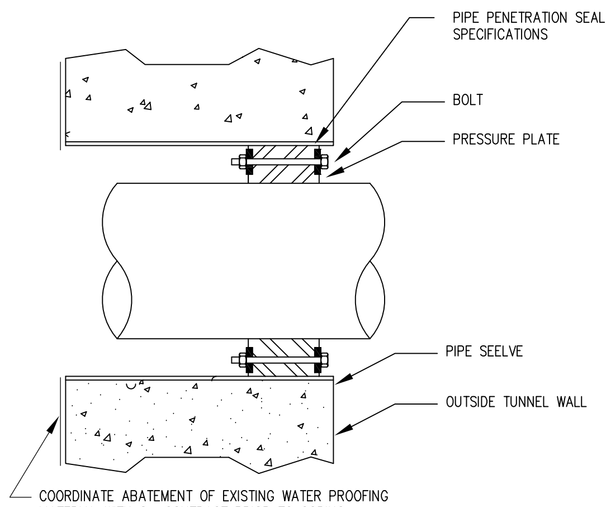

1 PIPE SLEEVE DETAIL

NOT TO SCALE

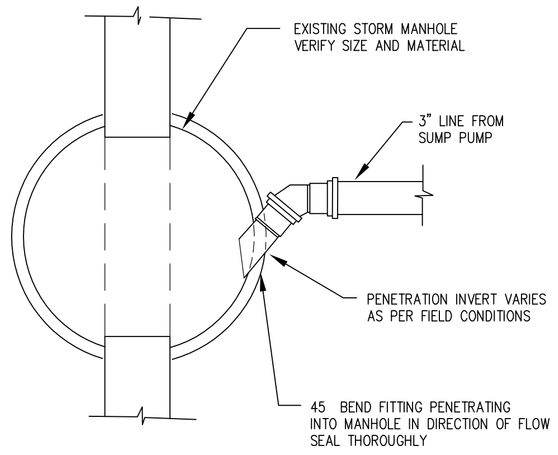

2 MANHOLE TIE IN DETAIL

NOT TO SCALE

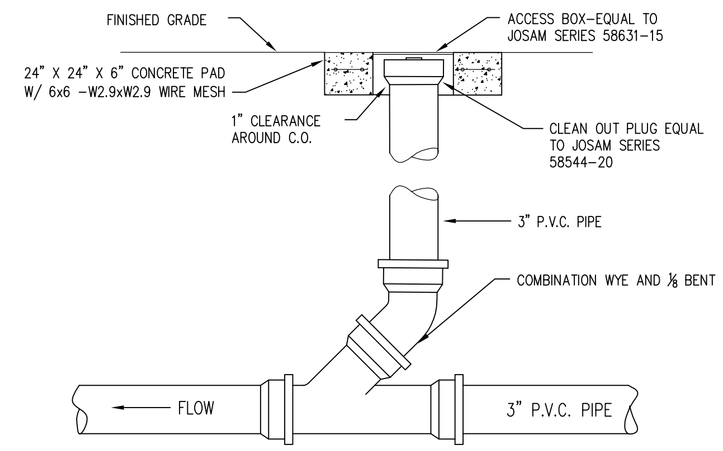

NOTE: WHERE CLEAN OUT PLUG CAN NOT BE INSTALLED AT GRADE, KEEP 6" BELOW FIN. GRADE

3 TIE IN DETAIL

NOT TO SCALE

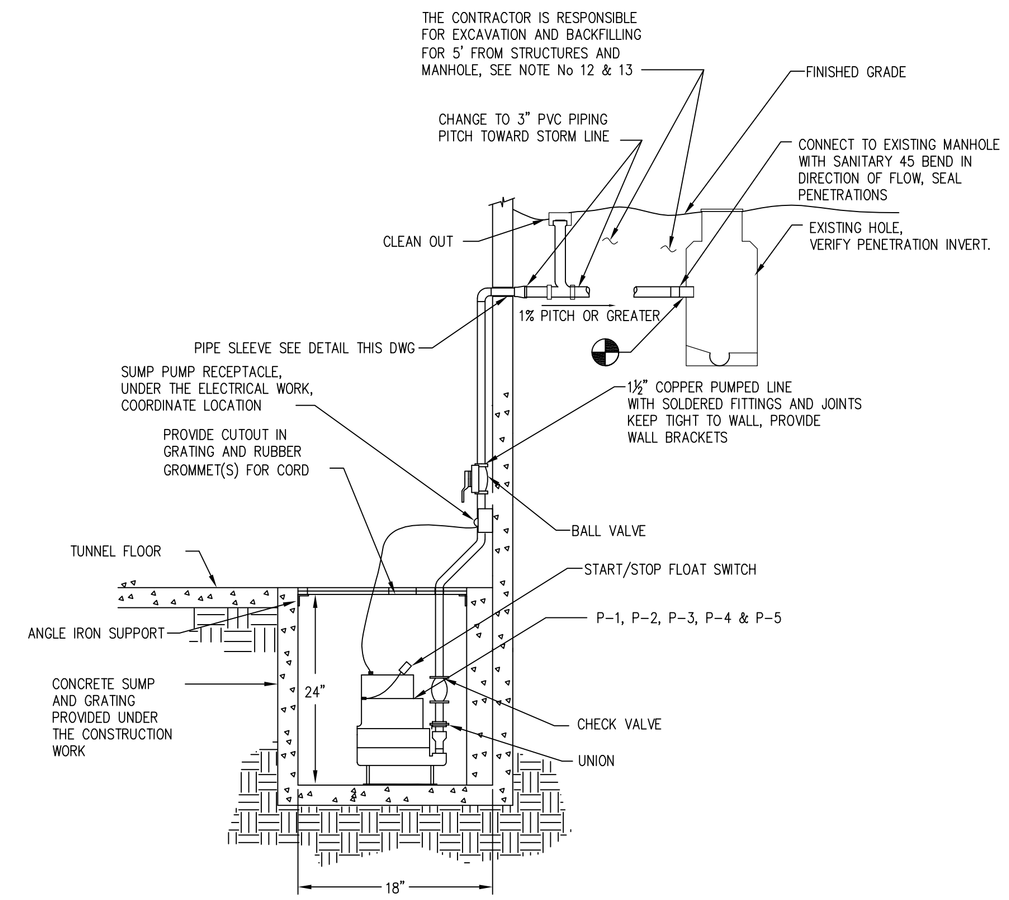

4 SUMP PUMP DETAIL

NOT TO SCALE

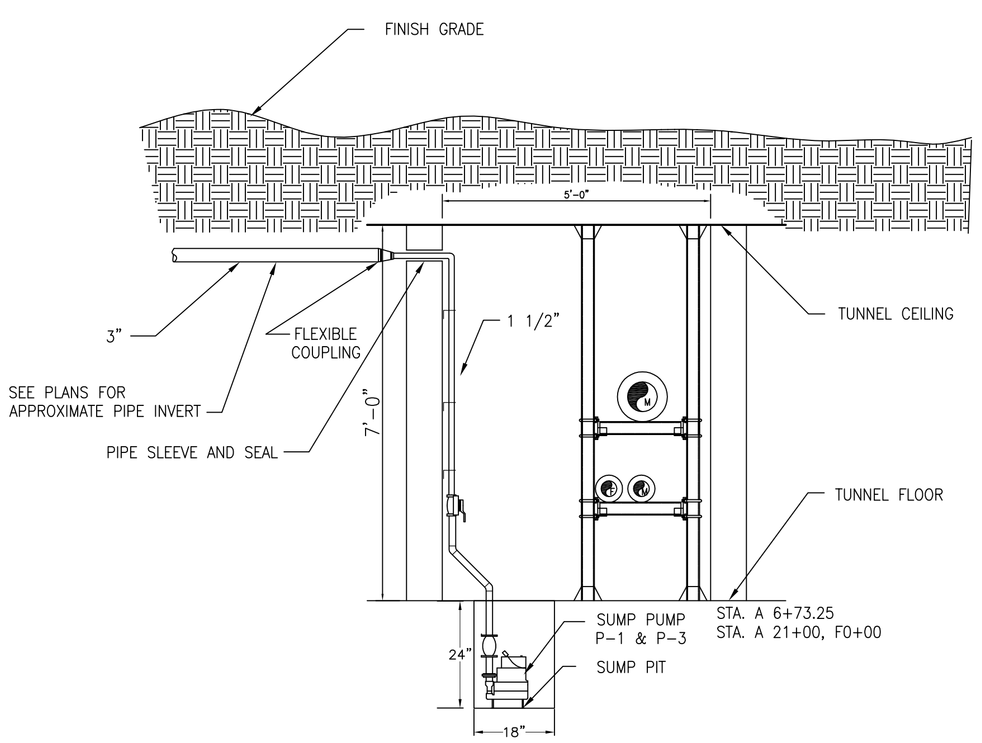

5 SUMP PUMP P-1 & P-3 TUNNEL SECTION

SCALE ½"=1'-0"

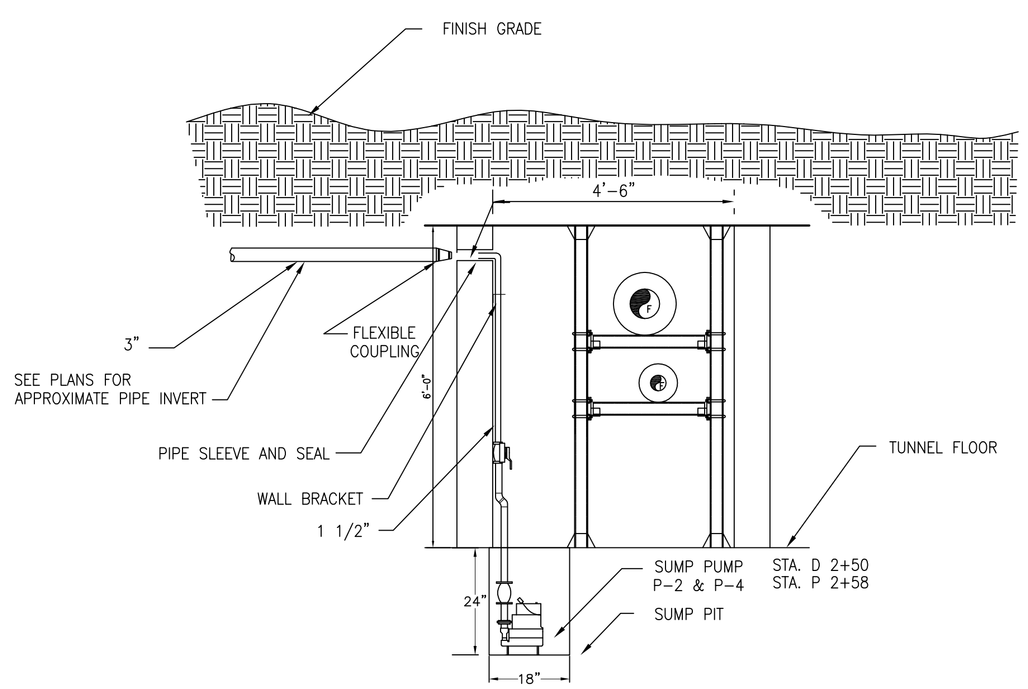

6 SUMP PUMP P-2 & P-4 TUNNEL SECTION

SCALE ½"=1'-0"

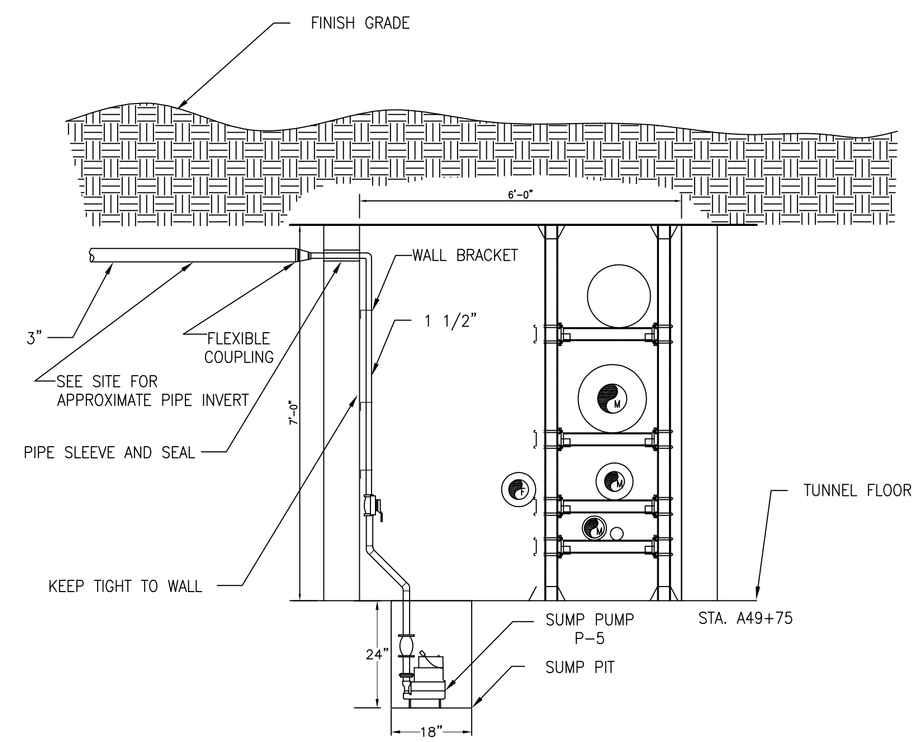

7 SUMP PUMP P-5 TUNNEL SECTION

SCALE ½"=1'-0"

NYS OFFICE OF GENERAL SERVICES

Serving New York

ANDREW M. CUOMO
Governor
ROANN M. DESTITO
Commissioner

CONSULTANT

GPI

GREENMAN-PEDERSEN, INC.
CONSULTING ENGINEERS

80 WOLF ROAD, SUITE 300
ALBANY, NY 12205
TEL: (518) 453-9431
FAX: (518) 453-9458
WWW.GPINET.COM

WARNING:

THE ALTERATION OF THIS MATERIAL IN ANY WAY, UNLESS DONE UNDER THE DIRECTION OF A COMPARABLE PROFESSIONAL, I.E. ARCHITECT FOR AN ARCHITECT, ENGINEER FOR AN ENGINEER OR LANDSCAPE ARCHITECT FOR A LANDSCAPE ARCHITECT, IS A VIOLATION OF THE NEW YORK STATE EDUCATION LAW AND/OR REGULATIONS AND IS A CLASS 'A' MISDEMEANOR.

STATE OF NEW YORK · STEPHEN CARL SWIFT · 082710 · LICENSED PROFESSIONAL ENGINEER

2/21/2013

CONTRACT:

PLUMBING

TITLE:

REPAIR UNDERGROUND STEAM TUNNELS

LOCATION:

WILLARD DRUG TREATMENT CENTER
7116 COUNTY ROUTE 132
WILLARD, NEW YORK

CLIENT:

DEPARTMENT OF CORRECTIONS AND COMMUNITY SUPERVISION

REVISED DRAWING
2/22/2013

MARK	DATE	DESCRIPTION
1	02/22/2013	ADDENDUM 1
	02/06/2013	BID DOCUMENT

PROJECT NUMBER:	44288-P
DESIGNED BY:	SJV
DRAWN BY:	SJV
FIELD CHECK:	
APPROVED:	SCD

SHEET TITLE:

DETAILS, SECTIONS AND SCHEDULE

DRAWING NUMBER:

P-501

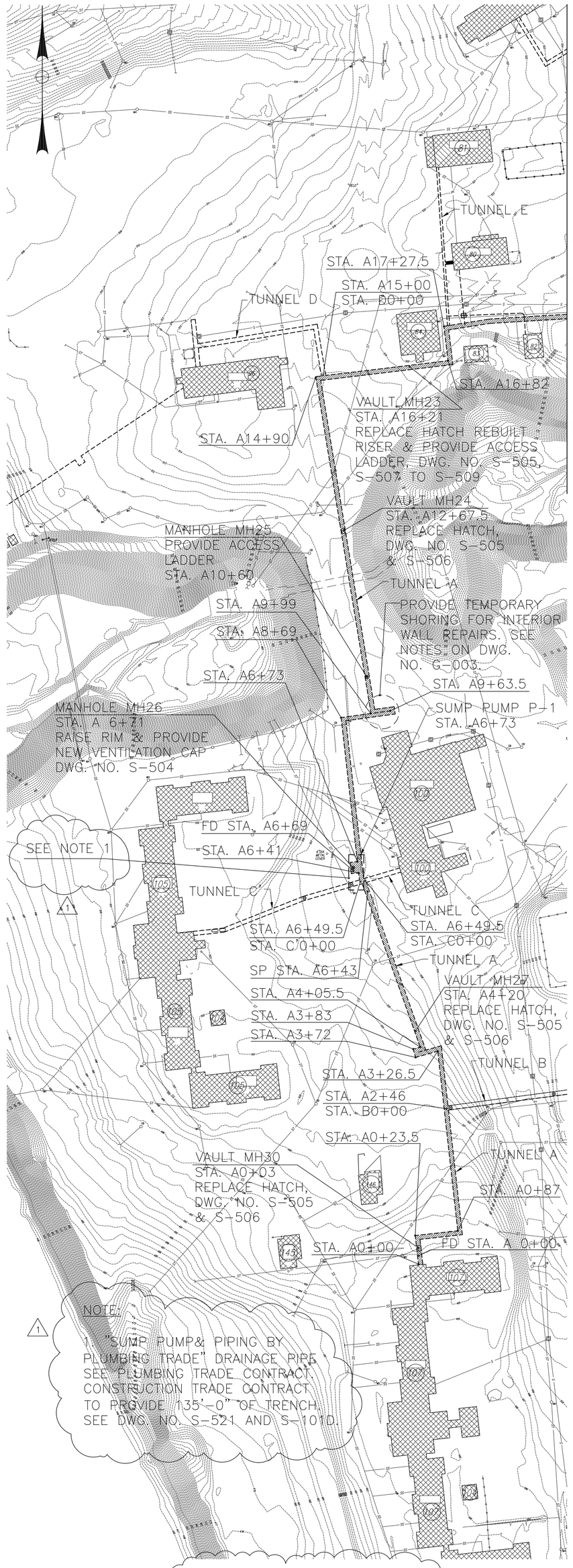

TUNNEL 'A' PLAN
SCALE: NONE

EXISTING CONDITION TUNNEL 'A'

CONCRETE REPAIR QUANTITIES TABLE – TUNNEL 'A'

REPAIR DESCIPTION	FLOOR	CEILING	RIGHT WALL	LEFT WALL	UNIT
REPAIR TYPE 2 – DETAIL 2, DWG. S-501	1	170	11	63	SF
REPAIR TYPE 3 – DETAIL 3, DWG. S-501	667	13	4659	5037	SF
REPAIR TYPE 4 – DETAIL 4, DWG. S-501	0	20	1434	1336	SF
REPAIR TYPE 5 – DETAIL 5, DWG. S-501	0	0	397	73	SF
JOINT REPAIR – DETAIL 6, DWG. S-501	1080	1080	1080	1080	LF
CRACK REPAIR – URETHANE, DWG. G-003	105	14	12	116	LF

TUNNEL 'A' STANCHION QUANTITIES TABLE

STANCHION REPAIR DESCRIPTION	EXPANSION	FIXED	UNIT
TOTAL REPLACEMENT	303		EACH
PARTIAL REPLACEMENT	1	11	EACH
VERTICALS/HORIZONTALS	6		EACH

NOTE:

SEE DWG. NO. S-512 FOR STANCHION DETAILS AND DWG. NOS. S-601, S-602 AND S-603 FOR STANCHION REPAIR SCHEDULE.

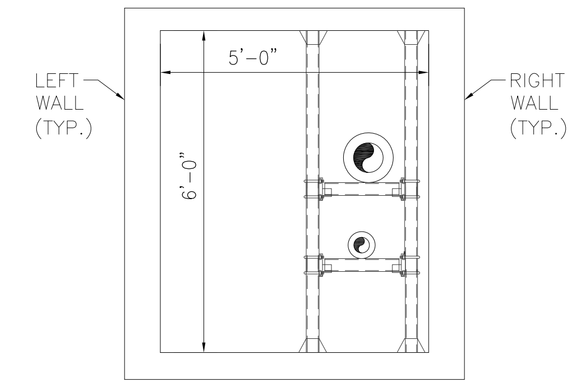

TUNNEL 'A' SECTION
STA. A 0+00 TO STA. A 2+43.25
SCALE: ½" = 1'-0"

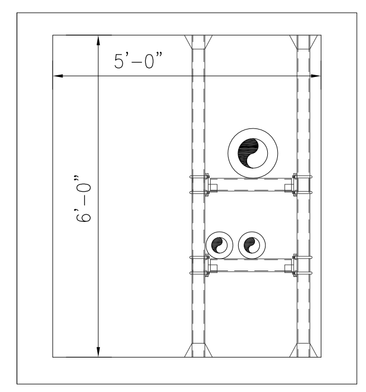

TUNNEL 'A' SECTION
STA. A 2+43.25 TO STA. A 3+67
STA. A 4+05.5 TO STA. A 6+41
SCALE: ½" = 1'-0"

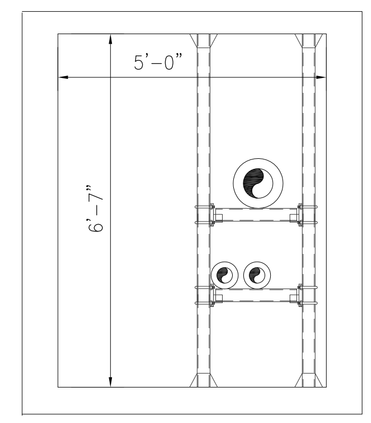

TUNNEL 'A' SECTION
STA. A 3+67 TO STA. A 4+05.5
SCALE: ½" = 1'-0"

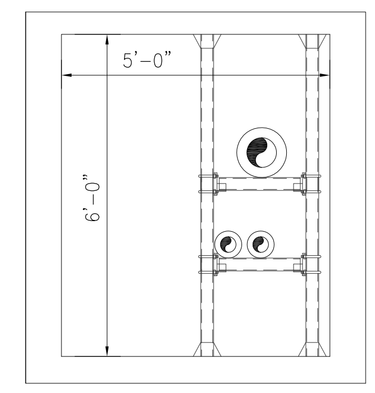

TUNNEL 'A' SECTION
STA. A 6+41 TO STA. A 6+73.5
SCALE: ½" = 1'-0"

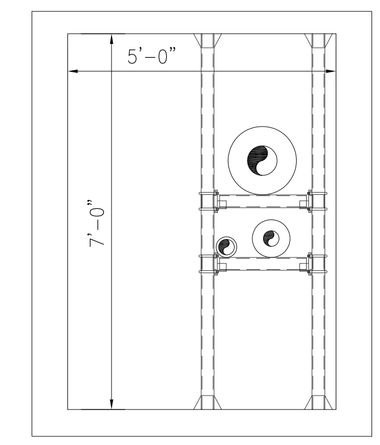

TUNNEL 'A' SECTION
STA. A 6+73.5 TO STA. A 9+28
STA. A 10+05 TO STA. A 17+18
STA. A 17+48 TO STA. A 18+65.25
SCALE: ½" = 1'-0"

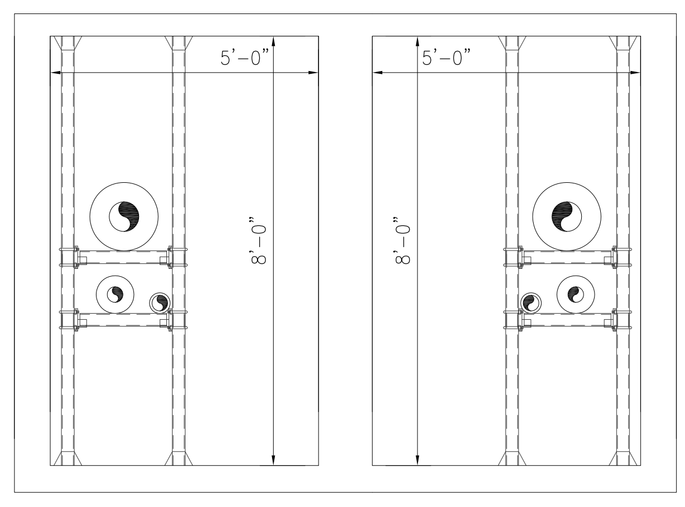

TUNNEL 'A' SECTION
STA. A 9+28 TO STA. A 9+99
SCALE: ½" = 1'-0"

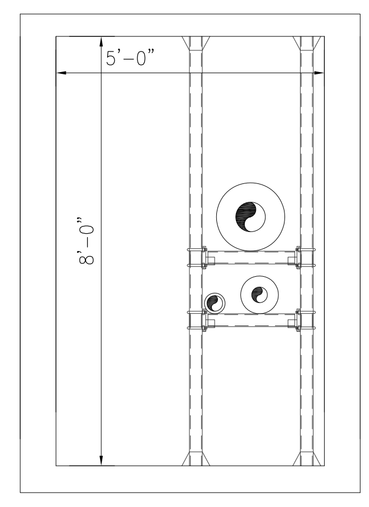

TUNNEL 'A' SECTION
STA. A 9+99 TO STA. A 10+05
SCALE: ½" = 1'-0"

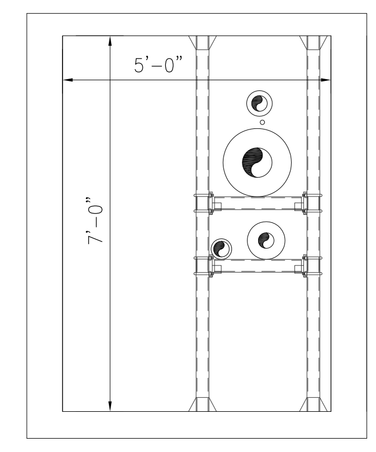

TUNNEL 'A' SECTION
STA. A 17+18 TO STA. A 17+48
SCALE: ½" = 1'-0"

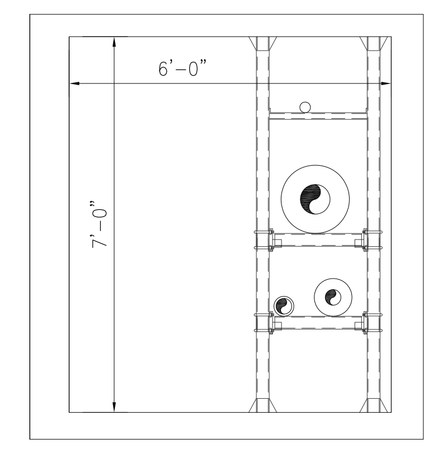

TUNNEL 'A' SECTION
STA. A 18+65 TO STA. A 19+30
SCALE: ½" = 1'-0"

NYS OFFICE OF GENERAL SERVICES
Serving New York
ANDREW M. CUOMO
Governor
ROANN M. DESTITO
Commissioner

CONSULTANT

GPI
GREENMAN-PEDERSEN, INC.
CONSULTING ENGINEERS
80 WOLF ROAD, SUITE 300
ALBANY, NY 12205
TEL: (518) 453-9431
FAX: (518) 453-9458
WWW.GPINET.COM

WARNING:
THE ALTERATION OF THIS MATERIAL IN ANY WAY, UNLESS DONE UNDER THE DIRECTION OF A COMPARABLE PROFESSIONAL, I.E. ARCHITECT FOR AN ARCHITECT, ENGINEER FOR AN ENGINEER OR LANDSCAPE ARCHITECT FOR A LANDSCAPE ARCHITECT, IS A VIOLATION OF THE NEW YORK STATE EDUCATION LAW AND/OR REGULATIONS AND IS A CLASS 'A' MISDEMEANOR.

STATE OF NEW YORK
JOHN G. RIZZO
077511
LICENSED PROFESSIONAL ENGINEER

CONTRACT:
CONSTRUCTION

TITLE:
REPAIR UNDERGROUND STEAM TUNNELS

LOCATION:
WILLARD DRUG TREATMENT CENTER
7116 COUNTY ROUTE 132
WILLARD, NEW YORK

CLIENT:
DEPARTMENT OF CORRECTIONS AND COMMUNITY SUPERVISION

REVISED DRAWING
2/22/2013

MARK	DATE	DESCRIPTION
1	02/22/2013	ADDENDUM 1
	02/06/2013	BID DOCUMENT

PROJECT NUMBER:	44288-C
DESIGNED BY:	M. BORGEL
DRAWN BY:	F. CUOCCIO
FIELD CHECK:	
APPROVED:	

SHEET TITLE:
TUNNEL A
REPAIR PLAN & TYP SECTS
A0+00 TO A19+30

DRAWING NUMBER:
S-101A

SHEET 8 OF 197

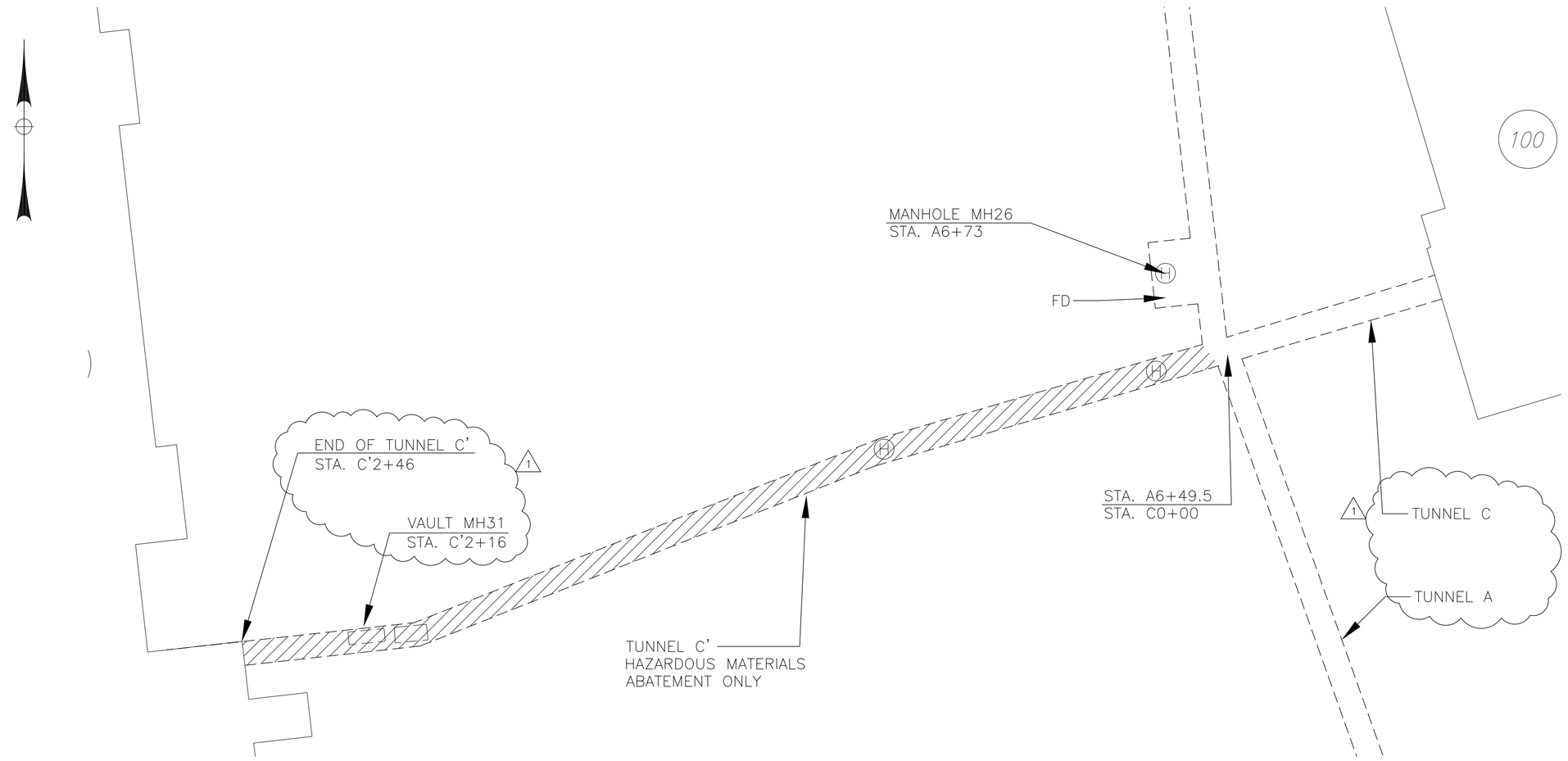

1 TUNNEL C' PLAN
SCALE: NONE

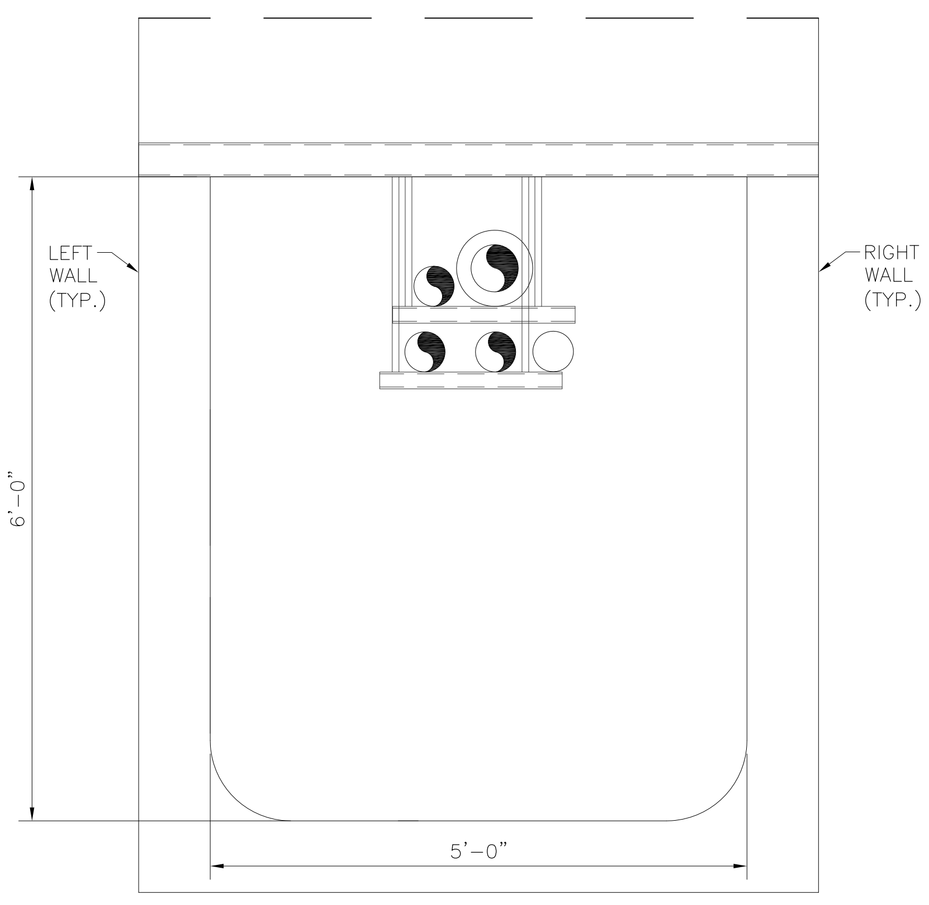

TUNNEL C' SECTION
STA. C' 0+00 TO STA. C' 2+46
SCALE: 1" = 1'-0"

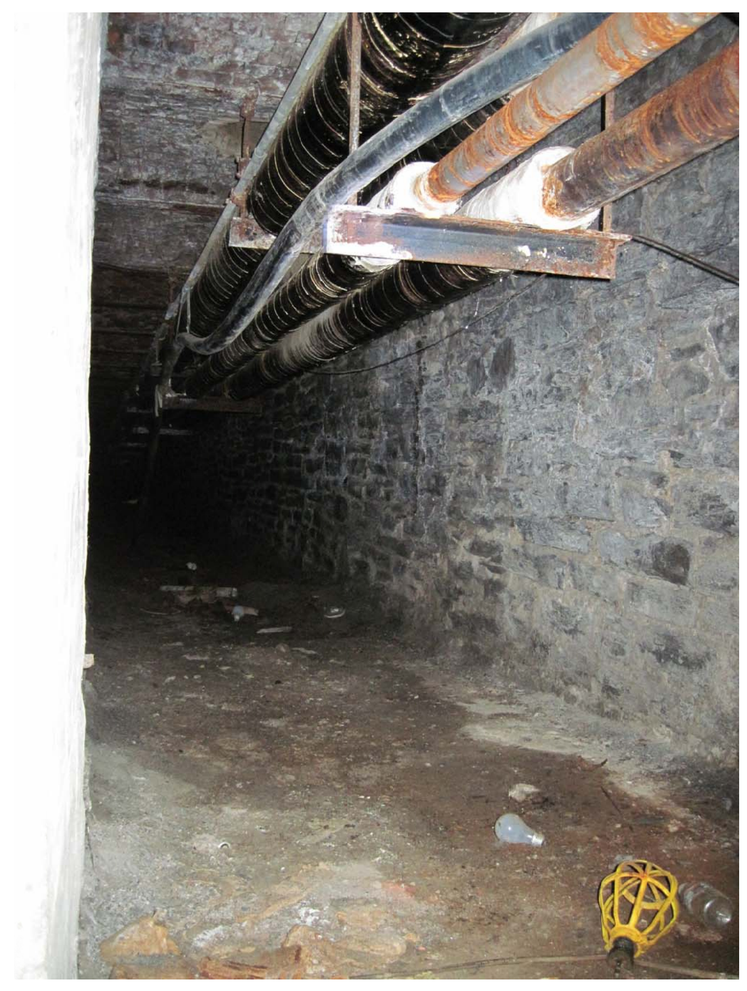

EXISTING CONDITION TUNNEL C'

NOTE:

1. NO STRUCTURAL WORK IS ANTICIPATED IN TUNNEL C'.
2. SEE DRAWING H-101 FOR ABATEMENT DETAILS.

NYS OFFICE OF GENERAL SERVICES
Serving New York

ANDREW M. CUOMO
Governor
ROANN M. DESTITO
Commissioner

CONSULTANT

GPI
GREENMAN-PEDERSEN, INC.
CONSULTING ENGINEERS
80 WOLF ROAD, SUITE 300
ALBANY, NY 12205
TEL: (518) 453-9431
FAX: (518) 453-9458
WWW.GPINET.COM

WARNING:
THE ALTERATION OF THIS MATERIAL IN ANY WAY, UNLESS DONE UNDER THE DIRECTION OF A COMPARABLE PROFESSIONAL, I.E. ARCHITECT FOR AN ARCHITECT, ENGINEER FOR AN ENGINEER OR LANDSCAPE ARCHITECT FOR A LANDSCAPE ARCHITECT, IS A VIOLATION OF THE NEW YORK STATE EDUCATION LAW AND/OR REGULATIONS AND IS A CLASS 'A' MISDEMEANOR.

STATE OF NEW YORK
JOHN G. RIZZO
077511
LICENSED PROFESSIONAL ENGINEER

CONTRACT:
CONSTRUCTION

TITLE:
REPAIR UNDERGROUND
STEAM TUNNELS

LOCATION:
WILLARD DRUG TREATMENT CENTER
7116 COUNTY ROUTE 132
WILLARD, NEW YORK

CLIENT:
DEPARTMENT OF CORRECTIONS
AND COMMUNITY SUPERVISION

REVISED DRAWING
2/22/2013

MARK	DATE	DESCRIPTION
1	02/22/2013	ADDENDUM 1
	02/06/2013	BID DOCUMENT

PROJECT NUMBER:	44288-C
DESIGNED BY:	M. BORGEL
DRAWN BY:	F. CUOCCIO
FIELD CHECK:	
APPROVED:	

SHEET TITLE:
TUNNEL C'
REPAIR PLAN & TYP SECTS
C'0+00 TO C'2+46

DRAWING NUMBER:
S-101C'

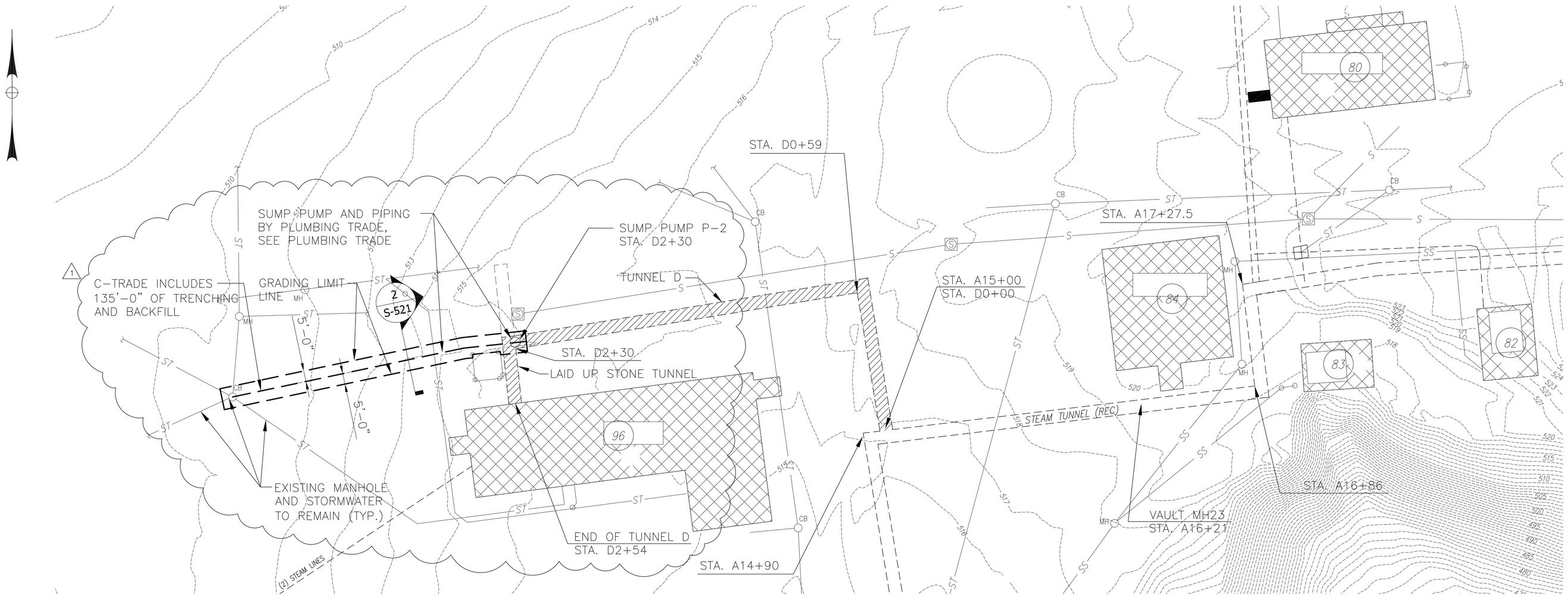

TUNNEL 'D' PLAN

SCALE: NONE

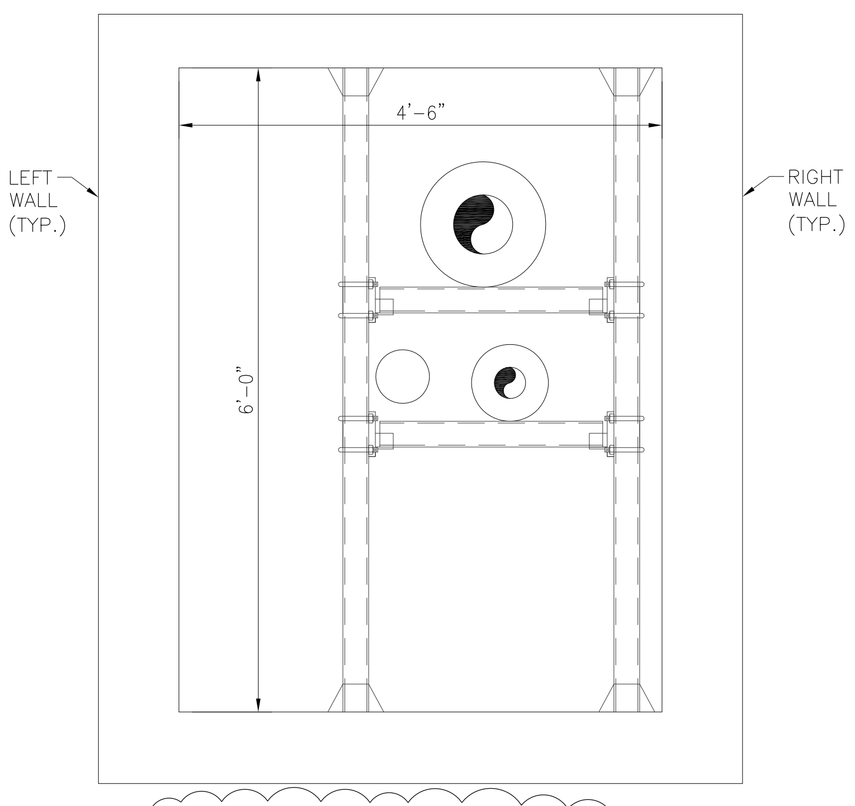

TUNNEL 'D' SECTION

STA. D 0+00 TO STA. D 2+30
SCALE: 1" = 1'-0"

EXISTING CONDITION TUNNEL 'D'

CONCRETE REPAIR QUANTITIES TABLE – TUNNEL 'D'

REPAIR DESCIPTION	FLOOR	CEILING	RIGHT WALL	LEFT WALL	UNIT
REPAIR TYPE 2 – DETAIL 2, DWG. S-501	0	0	0	18	SF
REPAIR TYPE 3 – DETAIL 3, DWG. S-501	0	0	39	48	SF
REPAIR TYPE 4 – DETAIL 4, DWG. S-501	0	0	0	0	SF
REPAIR TYPE 5 – DETAIL 5, DWG. S-501	0	0	0	0	SF
JOINT REPAIR – DETAIL 6, DWG. S-501	37	37	37	37	LF
CRACK REPAIR – EPOXY, DWG. G-003	0	0	12	0	LF
CRACK REPAIR – URETHANE, DWG. G-003	0	0	0	0	LF

TUNNEL 'D' STANCHION QUANTITIES TABLE

STANCHION REPAIR DESCRIPTION	EXPANSION	FIXED	UNIT
TOTAL REPLACEMENT	5		EACH
PARTIAL REPLACEMENT		1	EACH

1 NOTE:

SEE DWG. NO. S-512 FOR STANCHION DETAILS AND DWG. NOS. S-601, S-602 AND S-603 FOR STANCHION REPAIR SCHEDULE.

NYS OFFICE OF GENERAL SERVICES

Serving New York

ANDREW M. CUOMO
Governor
ROANN M. DESTITO
Commissioner

CONSULTANT

GPI
GREENMAN-PEDERSEN, INC.
CONSULTING ENGINEERS
80 WOLF ROAD, SUITE 300
ALBANY, NY 12205
TEL: (518) 453-9431
FAX: (518) 453-9458
WWW.GPINET.COM

WARNING:
THE ALTERATION OF THIS MATERIAL IN ANY WAY, UNLESS DONE UNDER THE DIRECTION OF A COMPARABLE PROFESSIONAL, I.E. ARCHITECT FOR AN ARCHITECT, ENGINEER FOR AN ENGINEER OR LANDSCAPE ARCHITECT FOR A LANDSCAPE ARCHITECT, IS A VIOLATION OF THE NEW YORK STATE EDUCATION LAW AND/OR REGULATIONS AND IS A CLASS 'A' MISDEMEANOR.

STATE OF NEW YORK · JOHN G. RIZZO · 077511 · LICENSED PROFESSIONAL ENGINEER

CONTRACT:
CONSTRUCTION

TITLE:
REPAIR UNDERGROUND STEAM TUNNELS

LOCATION:
WILLARD DRUG TREATMENT CENTER
7116 COUNTY ROUTE 132
WILLARD, NEW YORK

CLIENT:
DEPARTMENT OF CORRECTIONS AND COMMUNITY SUPERVISION

REVISED DRAWING
2/22/2013

MARK	DATE	DESCRIPTION
1	02/22/2013	ADDENDUM 1
	02/06/2013	BID DOCUMENT

PROJECT NUMBER:	44288-C
DESIGNED BY:	M. BORGEL
DRAWN BY:	F. CUOCCIO
FIELD CHECK:	
APPROVED:	

SHEET TITLE:
TUNNEL D
REPAIR PLAN & TYP SECT
D0+00 TO D2+54

DRAWING NUMBER:
S-101D

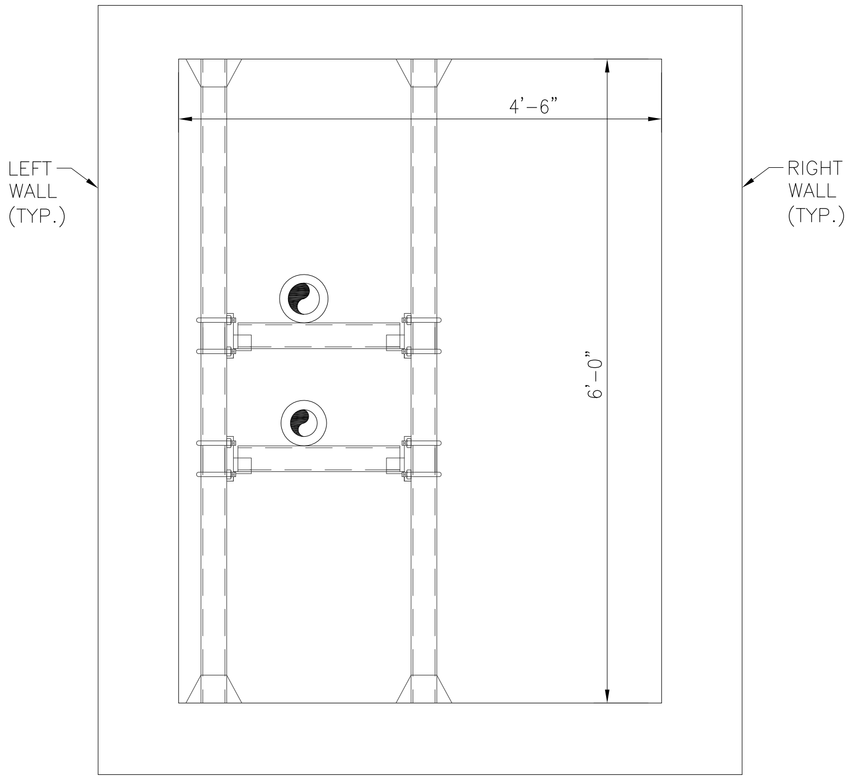

TUNNEL 'G' SECTION
STA. G 0+00 TO STA. G 2+55.
SCALE: 1" = 1'-0"

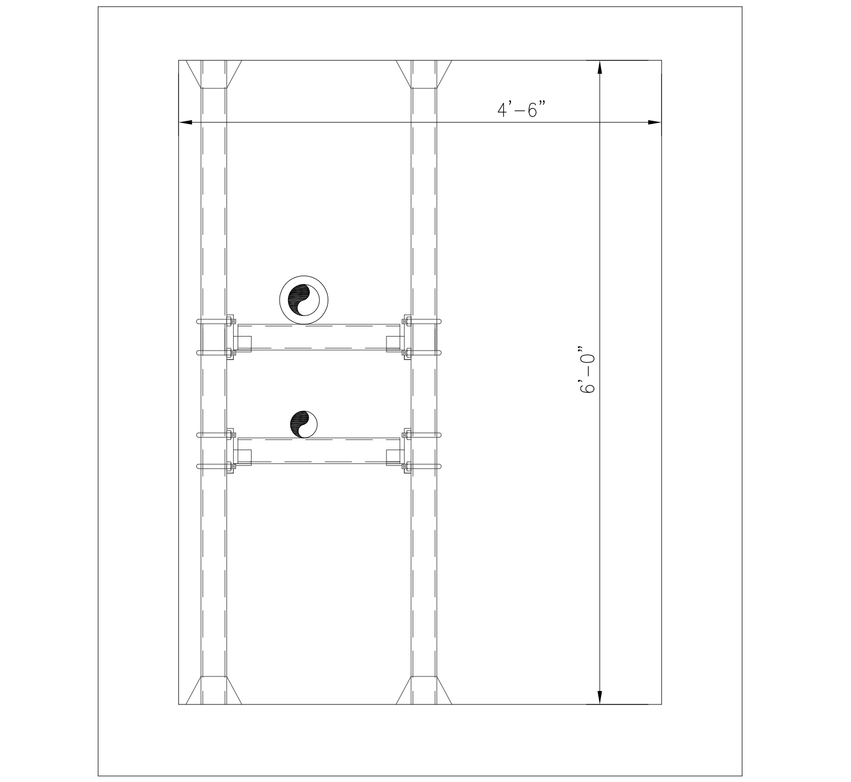

TUNNEL 'G' SECTION
STA. G 2+55.5 TO STA. G 2+80
SCALE: 1" = 1'-0"

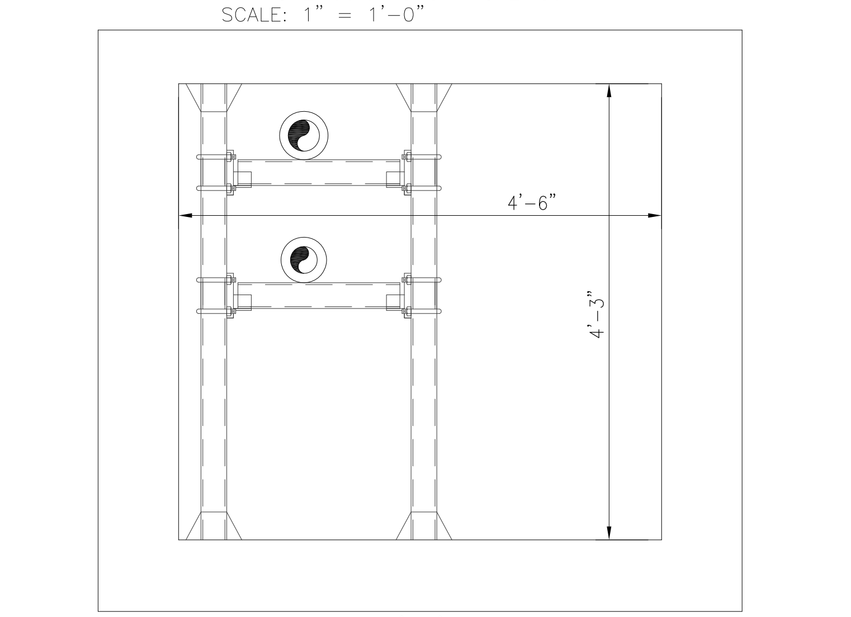

TUNNEL 'G' SECTION
STA. G 2+80 TO ST. G 2+86
SCALE: 1" = 1'-0"

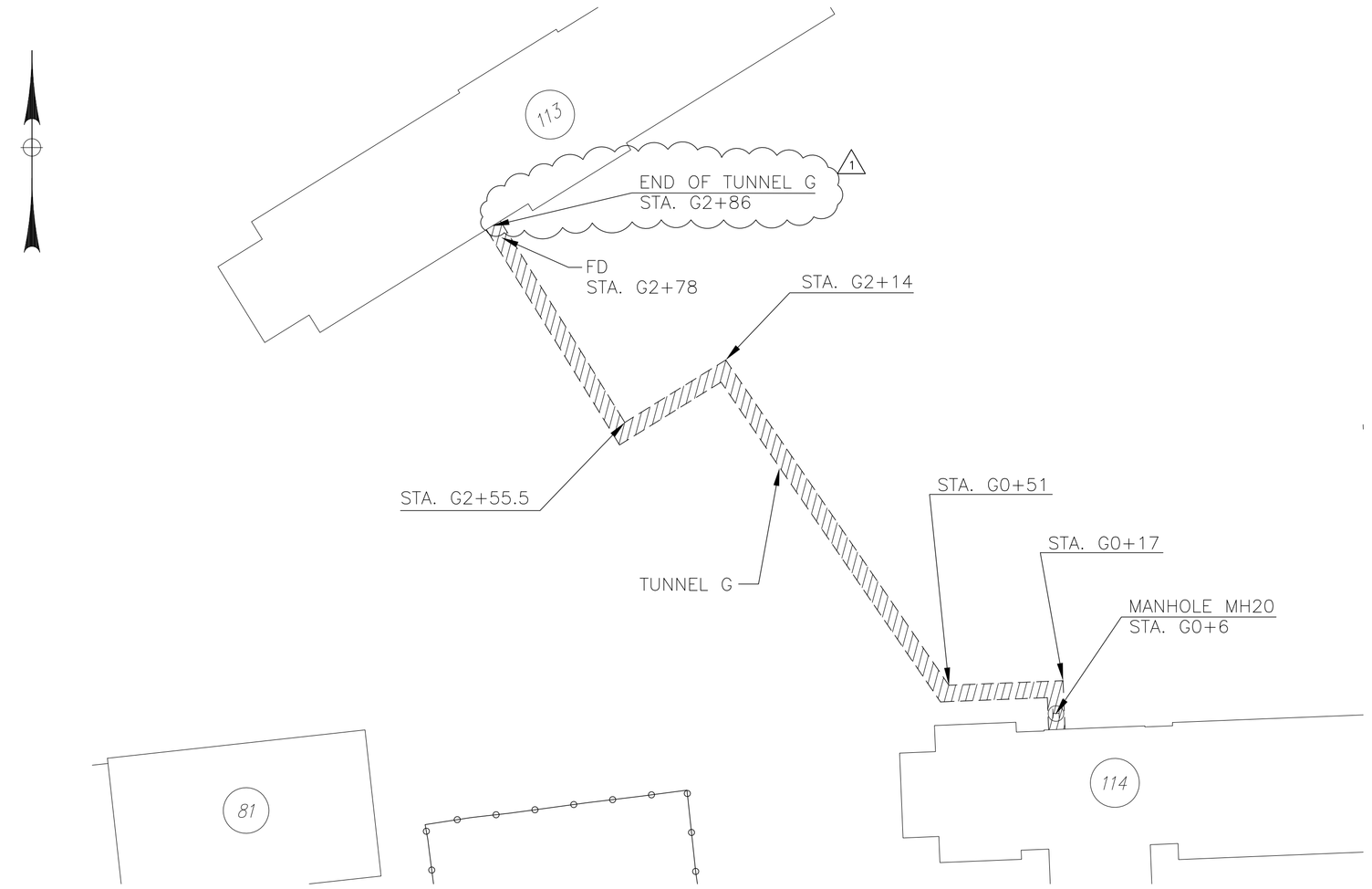

1 TUNNEL 'G' PLAN
SCALE: NONE

EXISTING CONDITION TUNNEL 'G'

CONCRETE REPAIR QUANTITIES TABLE – TUNNEL 'G'

REPAIR DESCIPTION	FLOOR	CEILING	RIGHT WALL	LEFT WALL	UNIT
REPAIR TYPE 3 – DETAIL 3, DWG. S-501	300	0	5	0	SF
JOINT REPAIR – DETAIL 6, DWG. S-501	48	48	48	48	LF
CRACK REPAIR – EPOXY, DWG. G-003	11	0	0	0	LF

TUNNEL 'G' STANCHION QUANTITIES TABLE

STANCHION REPAIR DESCRIPTION	EXPANSION	FIXED	UNIT
TOTAL REPLACEMENT	14		EACH
RESET VERTICALS/HORIZONTALS	1		EACH

1 NOTE:

SEE DWG. NO. S-512 FOR STANCHION DETAILS AND DWG. NOS. S-601, S-602 AND S-603 FOR STANCHION REPAIR SCHEDULE.

NYS OFFICE OF GENERAL SERVICES
Serving New York
ANDREW M. CUOMO
Governor
ROANN M. DESTITO
Commissioner

CONSULTANT

GPI
GREENMAN-PEDERSEN, INC.
CONSULTING ENGINEERS
80 WOLF ROAD, SUITE 300
ALBANY, NY 12205
TEL: (518) 453-9431
FAX: (518) 453-9458
WWW.GPINET.COM

WARNING:
THE ALTERATION OF THIS MATERIAL IN ANY WAY, UNLESS DONE UNDER THE DIRECTION OF A COMPARABLE PROFESSIONAL, I.E. ARCHITECT FOR AN ARCHITECT, ENGINEER FOR AN ENGINEER OR LANDSCAPE ARCHITECT FOR A LANDSCAPE ARCHITECT, IS A VIOLATION OF THE NEW YORK STATE EDUCATION LAW AND/OR REGULATIONS AND IS A CLASS 'A' MISDEMEANOR.

STATE OF NEW YORK · JOHN G. RIZZO · 077511 · LICENSED PROFESSIONAL ENGINEER

CONTRACT:
CONSTRUCTION

TITLE:
REPAIR UNDERGROUND STEAM TUNNELS

LOCATION:
WILLARD DRUG TREATMENT CENTER
7116 COUNTY ROUTE 132
WILLARD, NEW YORK

CLIENT:
DEPARTMENT OF CORRECTIONS AND COMMUNITY SUPERVISION

REVISED DRAWING
2/22/2013

MARK	DATE	DESCRIPTION
1	02/22/2013	ADDENDUM 1
	02/06/2013	BID DOCUMENT

PROJECT NUMBER: 44288-C
DESIGNED BY: M. BORGEL
DRAWN BY: F. CUOCCIO
FIELD CHECK:
APPROVED:

SHEET TITLE:
TUNNEL G
REPAIR PLAN & TYP SECTS
G0+00 TO G2+86

DRAWING NUMBER:
S-101G

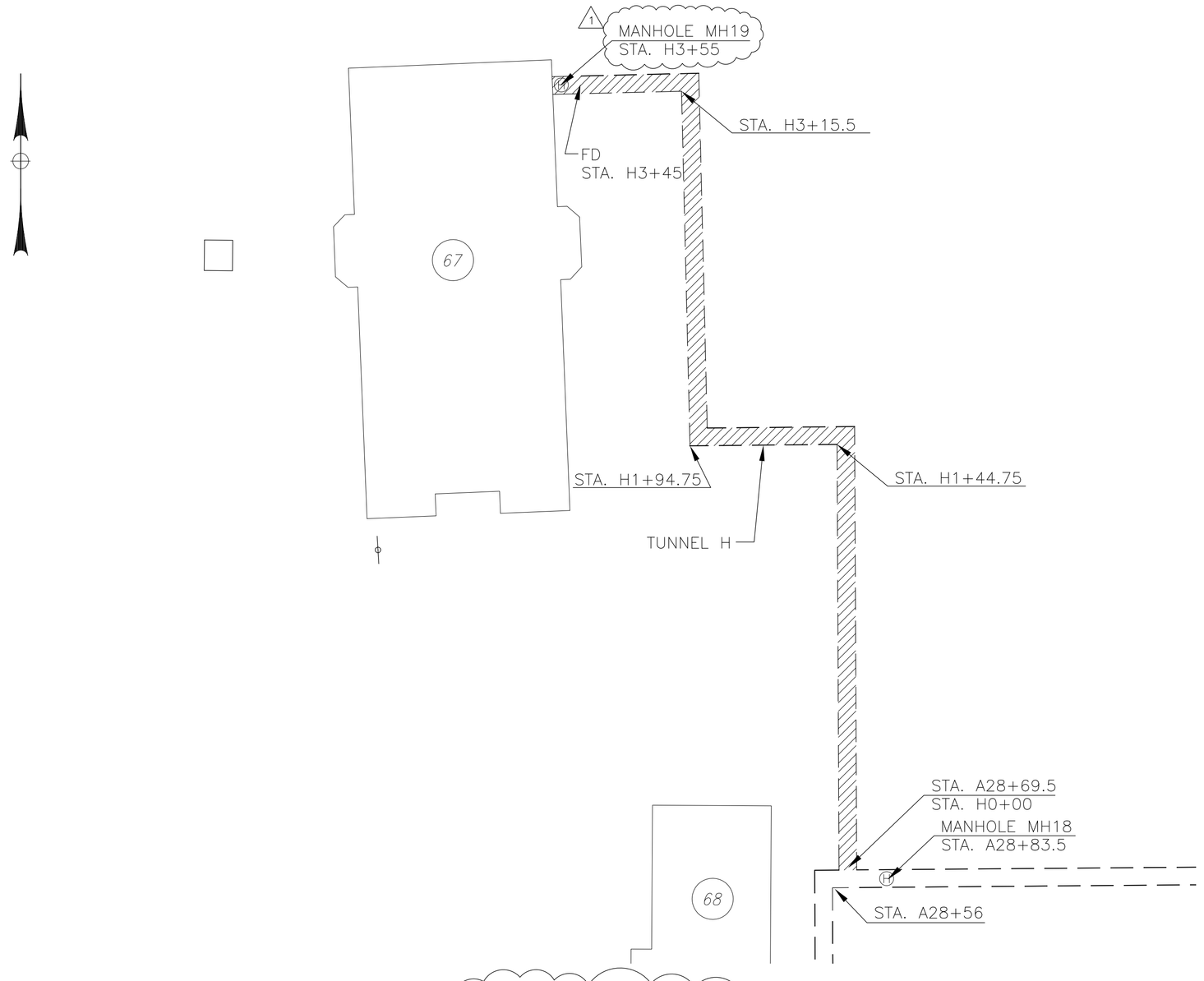

TUNNEL 'H' PLAN
SCALE: NONE

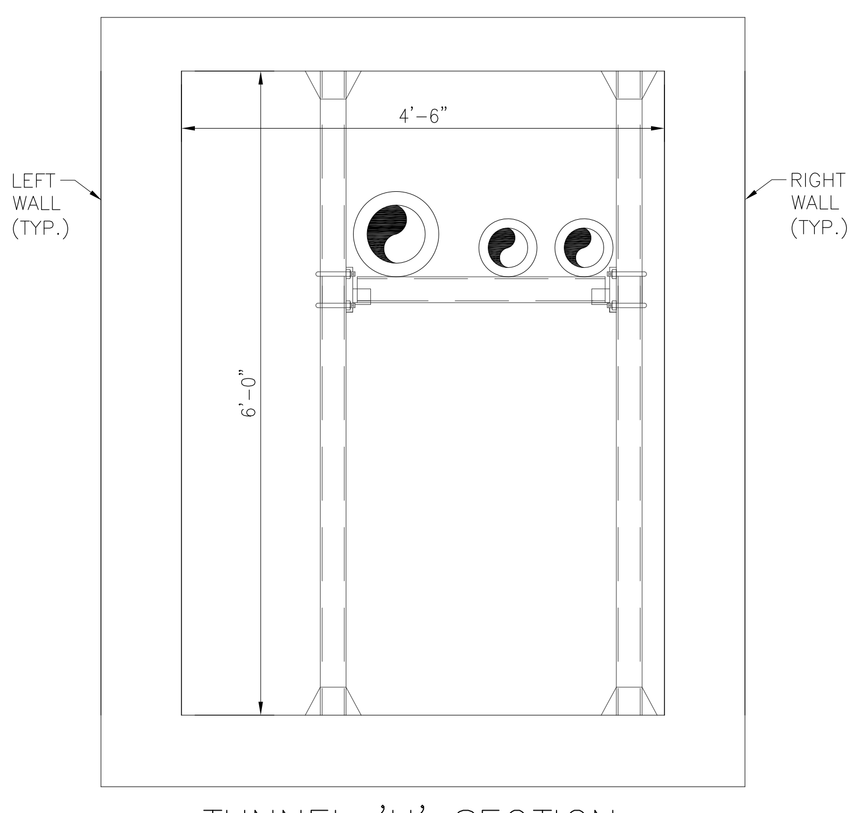

TUNNEL 'H' SECTION
STA. H 0+00 TO STA. H 3+59 SCALE: 1" = 1'-0"

EXISTING CONDITION TUNNEL 'H'

CONCRETE REPAIR QUANTITIES TABLE – TUNNEL 'H'

REPAIR DESCIPTION	TOTAL	UNIT
REPAIR TYPE 2 – DETAIL 2, DWG. S-501	7	SF
REPAIR TYPE 3 – DETAIL 3, DWG. S-501	350	SF
REPAIR TYPE 4 – DETAIL 4, DWG. S-501	100	SF
REPAIR TYPE 5 – DETAIL 5, DWG. S-501	0	SF
JOINT REPAIR – DETAIL 6, DWG. S-501	2860	LF
CRACK REPAIR – EPOXY, DWG. G-003	10	LF
CRACK REPAIR – URETHANE, DWG. G-003	20	LF

TUNNEL 'H' STANCHION QUANTITIES TABLE

STANCHION REPAIR DESCIPTION	EXPANSION	FIXED	UNIT
TOTAL REPLACEMENT	7		EACH

NOTE:

TUNNEL H WAS NOT INSPECTED. QUANTITIES ARE BASED ON VISUAL INSPECTION AT ENTRANCE AND ESTIMATED TUNNEL QUANTITIES. REPAIR PLANS WERE NOT GENERATED. LOCATIONS OF REPAIRS ARE TO BE DETERMINED AND LAID OUT BY THE CONTRACTOR AND THEN VERIFIED BY DIRECTOR'S REPRESENTATIVE PRIOR TO COMMENCEMENT OF WORK.

NYS OFFICE OF GENERAL SERVICES
Serving New York
ANDREW M. CUOMO
Governor
ROANN M. DESTITO
Commissioner

CONSULTANT

GPI
GREENMAN-PEDERSEN, INC.
CONSULTING ENGINEERS
80 WOLF ROAD, SUITE 300
ALBANY, NY 12205
TEL: (518) 453-9431
FAX: (518) 453-9458
WWW.GPINET.COM

WARNING:
THE ALTERATION OF THIS MATERIAL IN ANY WAY, UNLESS DONE UNDER THE DIRECTION OF A COMPARABLE PROFESSIONAL, I.E. ARCHITECT FOR AN ARCHITECT, ENGINEER FOR AN ENGINEER OR LANDSCAPE ARCHITECT FOR A LANDSCAPE ARCHITECT, IS A VIOLATION OF THE NEW YORK STATE EDUCATION LAW AND/OR REGULATIONS AND IS A CLASS 'A' MISDEMEANOR.

STATE OF NEW YORK
JOHN G. RIZZO
077511
LICENSED PROFESSIONAL ENGINEER

CONTRACT:
CONSTRUCTION

TITLE:
REPAIR UNDERGROUND STEAM TUNNELS

LOCATION:
WILLARD DRUG TREATMENT CENTER
7116 COUNTY ROUTE 132
WILLARD, NEW YORK

CLIENT:
DEPARTMENT OF CORRECTIONS AND COMMUNITY SUPERVISION

REVISED DRAWING
2/22/2013

MARK	DATE	DESCRIPTION
1	02/22/2013	ADDENDUM 1
	02/06/2013	BID DOCUMENT

PROJECT NUMBER:	44288-C
DESIGNED BY:	M. BORGEL
DRAWN BY:	F. CUOCCIO
FIELD CHECK:	
APPROVED:	

SHEET TITLE:
TUNNEL H
REPAIR PLAN & TYP SECT
H0+00 TO H3+59

DRAWING NUMBER:
S-101H

SHEET 101 OF 197

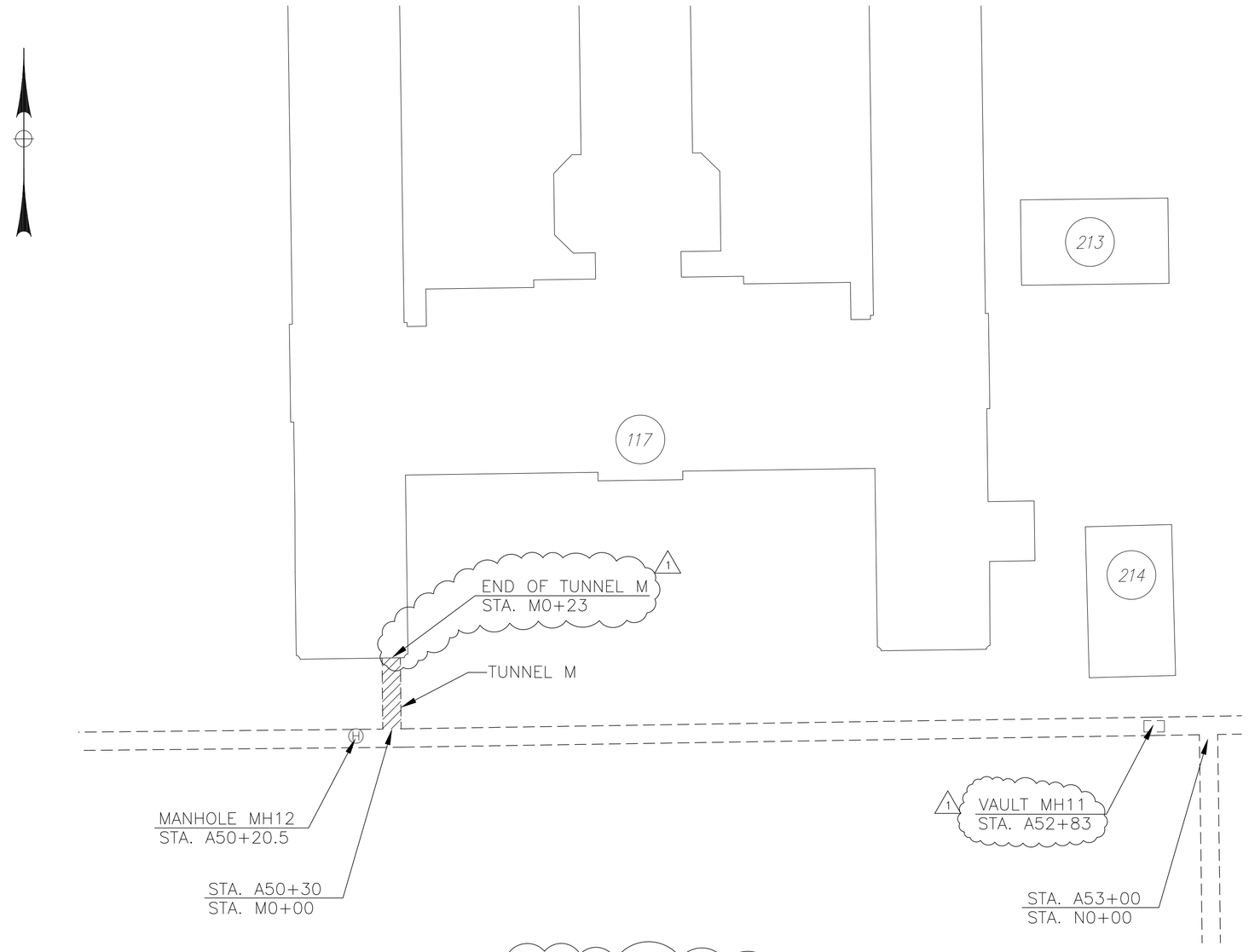

1 TUNNEL 'M' PLAN
SCALE: NONE

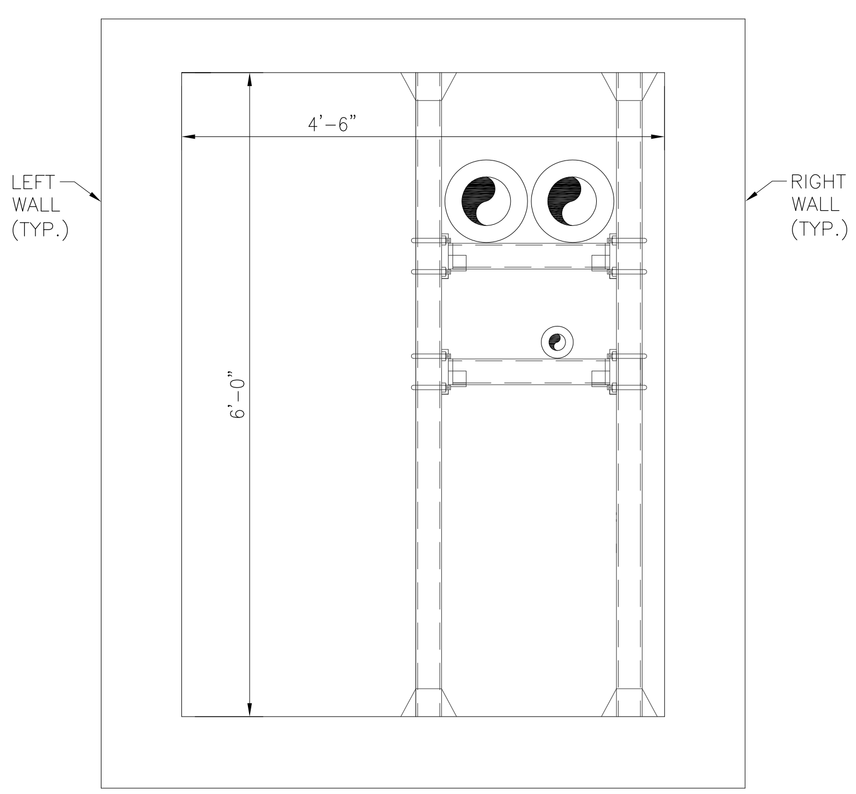

TUNNEL 'M' SECTION
STA. M 0+00 TO STA. M 0+23
SCALE: 1" = 1'-0"

EXISTING CONDITION TUNNEL 'M'

CONCRETE REPAIR QUANTITIES TABLE – TUNNEL 'M'

REPAIR DESCIPTION	FLOOR	CEILING	RIGHT WALL	LEFT WALL	UNIT
REPAIR TYPE 3 – DETAIL 3, DWG. S-501	0	0	6	0	SF
JOINT REPAIR – DETAIL 6, DWG. S-501	6	6	6	6	LF

NYS OFFICE OF GENERAL SERVICES
Serving New York
ANDREW M. CUOMO
Governor
ROANN M. DESTITO
Commissioner

CONSULTANT

GPI
GREENMAN-PEDERSEN, INC.
CONSULTING ENGINEERS
80 WOLF ROAD, SUITE 300
ALBANY, NY 12205
TEL: (518) 453-9431
FAX: (518) 453-9458
WWW.GPINET.COM

WARNING:
THE ALTERATION OF THIS MATERIAL IN ANY WAY, UNLESS DONE UNDER THE DIRECTION OF A COMPARABLE PROFESSIONAL, I.E. ARCHITECT FOR AN ARCHITECT, ENGINEER FOR AN ENGINEER OR LANDSCAPE ARCHITECT FOR A LANDSCAPE ARCHITECT, IS A VIOLATION OF THE NEW YORK STATE EDUCATION LAW AND/OR REGULATIONS AND IS A CLASS 'A' MISDEMEANOR.

STATE OF NEW YORK
JOHN G. RIZZO
077511
LICENSED PROFESSIONAL ENGINEER

CONTRACT:
CONSTRUCTION

TITLE:
REPAIR UNDERGROUND
STEAM TUNNELS

LOCATION:
WILLARD DRUG TREATMENT CENTER
7116 COUNTY ROUTE 132
WILLARD, NEW YORK

CLIENT:
DEPARTMENT OF CORRECTIONS
AND COMMUNITY SUPERVISION

REVISED DRAWING
2/22/2013

MARK	DATE	DESCRIPTION
1	02/22/2013	ADDENDUM 1
	02/06/2013	BID DOCUMENT

PROJECT NUMBER:	44288-C
DESIGNED BY:	M. BORGEL
DRAWN BY:	F. CUOCCIO
FIELD CHECK:	
APPROVED:	

SHEET TITLE:
TUNNEL M
REPAIR PLAN & TYP SECT
M0+00 TO M0+23

DRAWING NUMBER:
S-101M

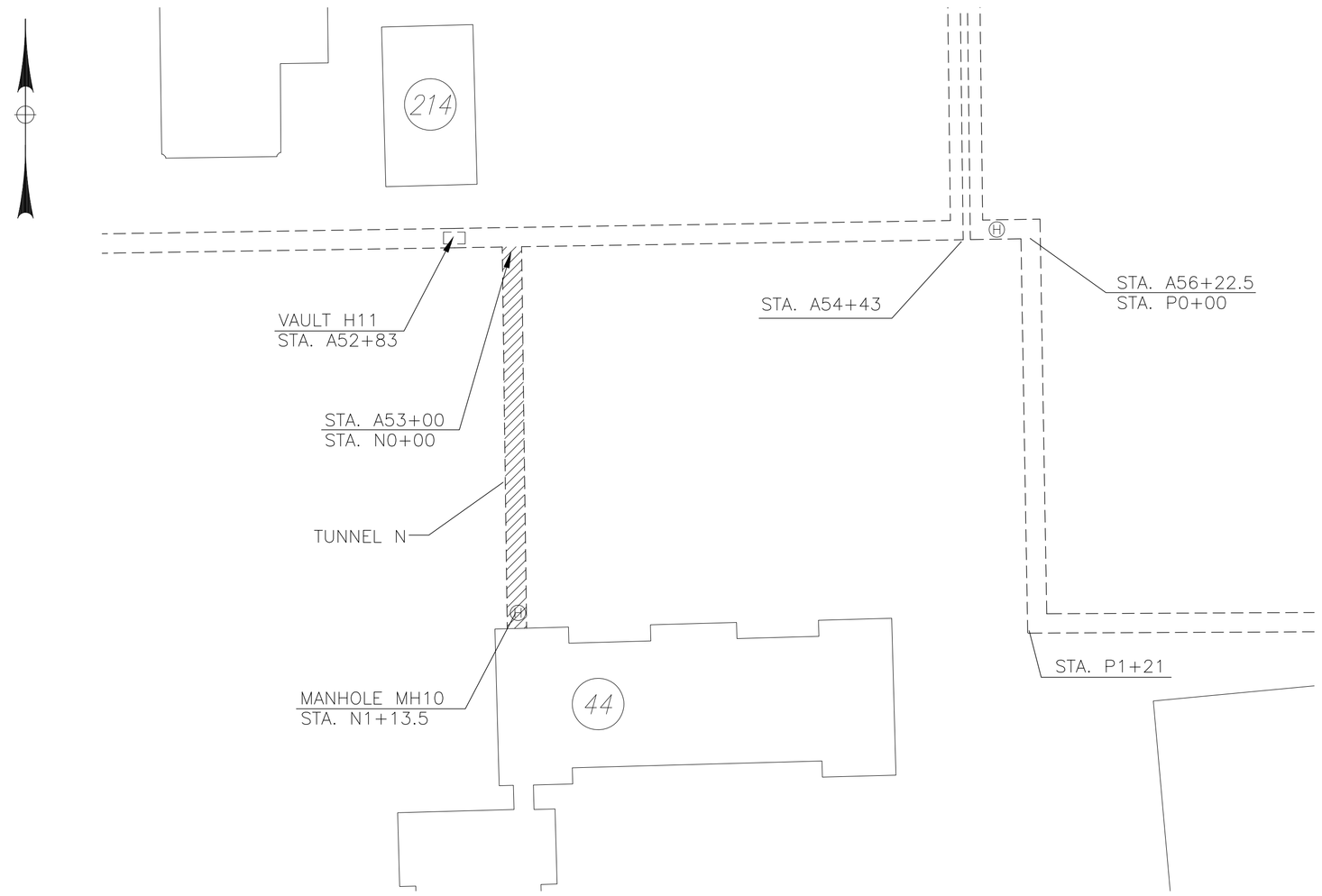

TUNNEL 'N' PLAN

SCALE: NONE

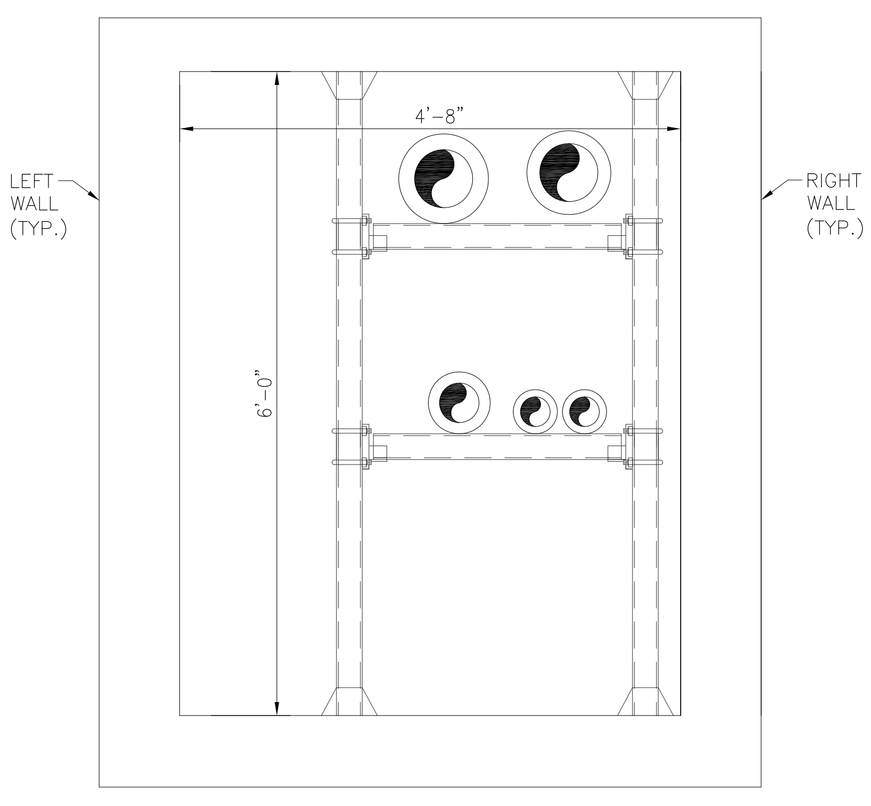

TUNNEL 'N' SECTION

STA. N 0+00 TO STA. N 1+19.5
SCALE: 1" = 1'-0"

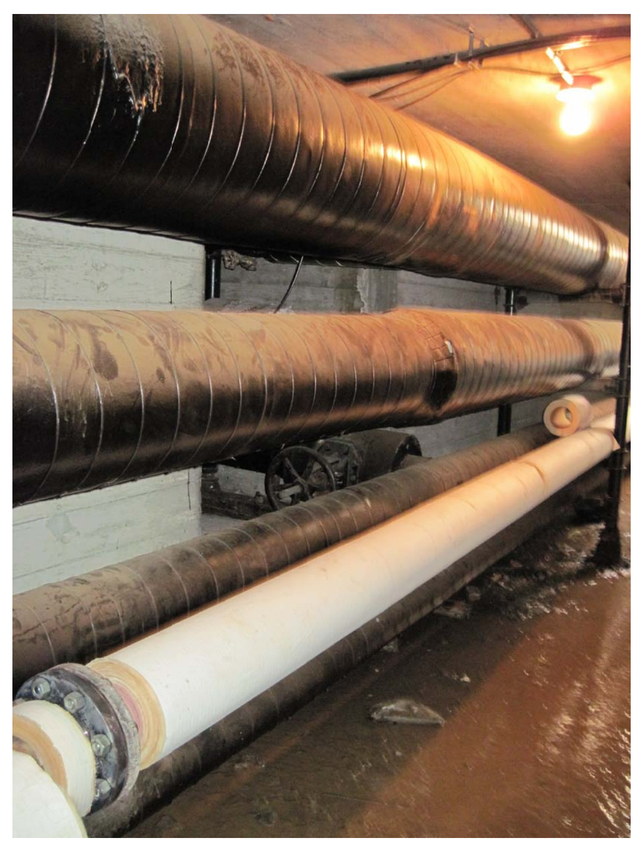

EXISTING CONDITION TUNNEL 'N'

SCALE: 1/8" = 1'-0"

CONCRETE REPAIR QUANTITIES TABLE – TUNNEL 'N'

REPAIR DESCIPTION	FLOOR	CEILING	RIGHT WALL	LEFT WALL	UNIT
REPAIR TYPE 2 – DETAIL 2, DWG. S-501	0	0	1	0	SF
JOINT REPAIR – DETAIL 6, DWG. S-501	22	22	22	22	LF
CRACK REPAIR – EPOXY, DWG. G-003	3	0	0	0	LF

NYS OFFICE OF GENERAL SERVICES
Serving New York
ANDREW M. CUOMO
Governor
ROANN M. DESTITO
Commissioner

CONSULTANT

GPI
GREENMAN-PEDERSEN, INC.
CONSULTING ENGINEERS
80 WOLF ROAD, SUITE 300
ALBANY, NY 12205
TEL: (518) 453-9431
FAX: (518) 453-9458
WWW.GPINET.COM

WARNING:
THE ALTERATION OF THIS MATERIAL IN ANY WAY, UNLESS DONE UNDER THE DIRECTION OF A COMPARABLE PROFESSIONAL, I.E. ARCHITECT FOR AN ARCHITECT, ENGINEER FOR AN ENGINEER OR LANDSCAPE ARCHITECT FOR A LANDSCAPE ARCHITECT, IS A VIOLATION OF THE NEW YORK STATE EDUCATION LAW AND/OR REGULATIONS AND IS A CLASS 'A' MISDEMEANOR.

STATE OF NEW YORK
JOHN G. RIZZO
077511
LICENSED PROFESSIONAL ENGINEER

CONTRACT:
CONSTRUCTION

TITLE:
REPAIR UNDERGROUND STEAM TUNNELS

LOCATION:
WILLARD DRUG TREATMENT CENTER
7116 COUNTY ROUTE 132
WILLARD, NEW YORK

CLIENT:
DEPARTMENT OF CORRECTIONS AND COMMUNITY SUPERVISION

REVISED DRAWING
2/22/2013

MARK	DATE	DESCRIPTION
1	02/22/2013	ADDENDUM 1
	02/06/2013	BID DOCUMENT

PROJECT NUMBER:	44288-C
DESIGNED BY:	M. BORGEL
DRAWN BY:	F. CUOCCIO
FIELD CHECK:	
APPROVED:	

SHEET TITLE:
TUNNEL N
REPAIR PLAN & TYP SECT
N0+00 TO N1+19.5

DRAWING NUMBER:
S-101N

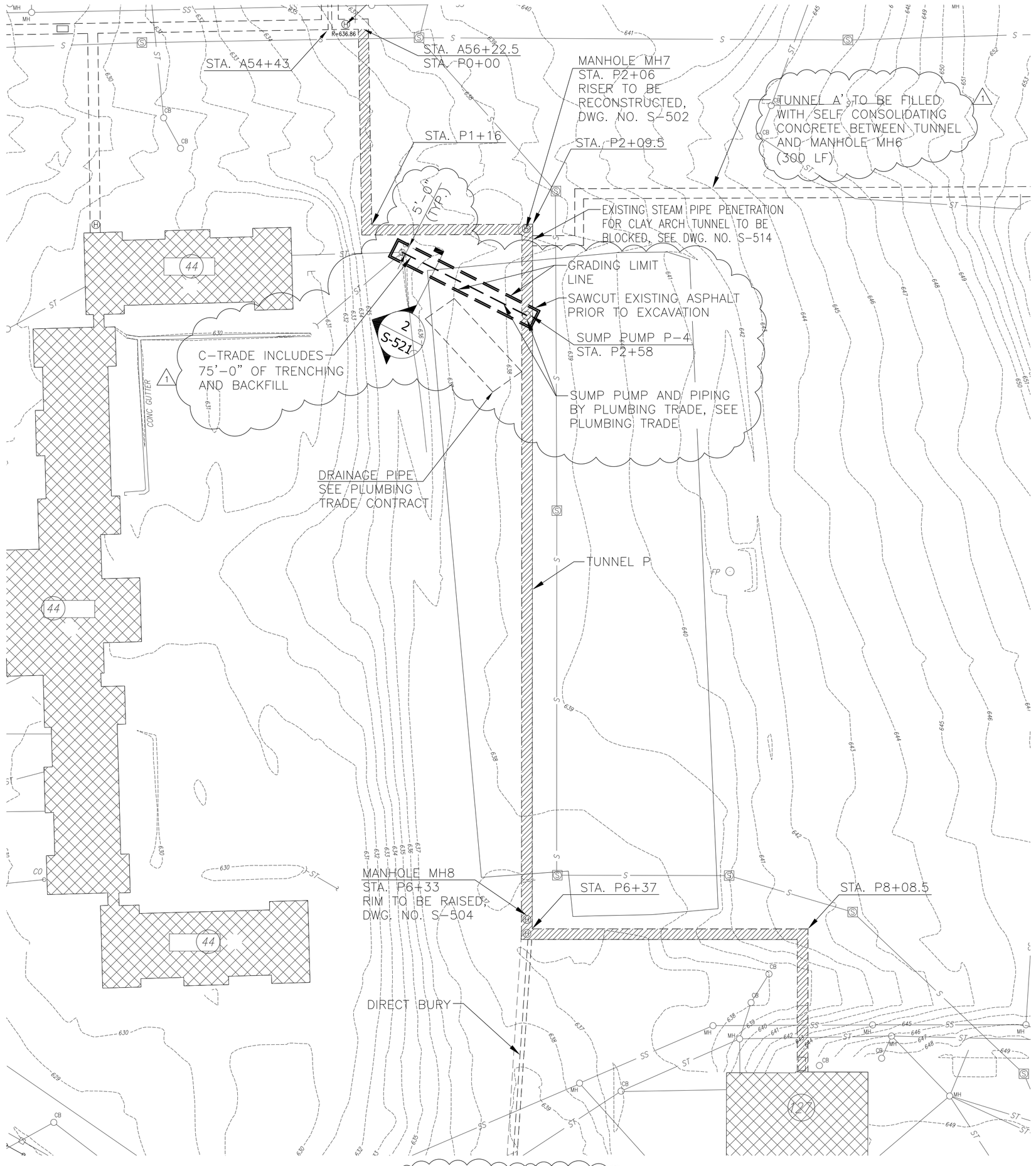

1 TUNNEL 'P' PLAN
SCALE: NONE

EXISTING CONDITION TUNNEL 'P'
(LOOKING BACK STATION)

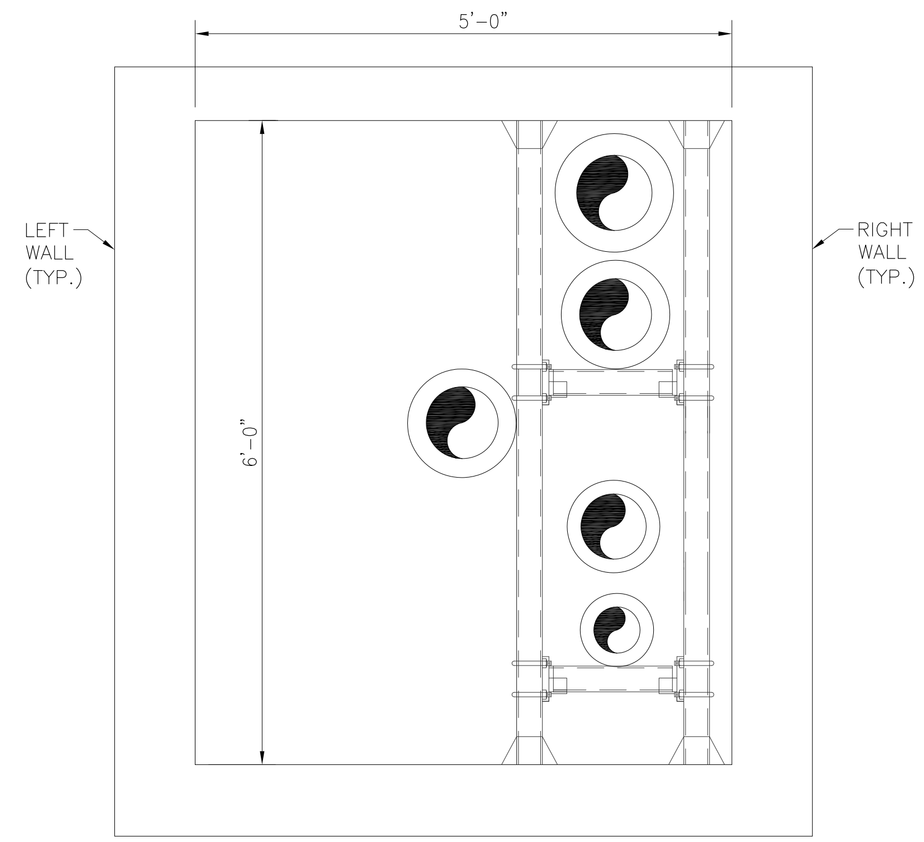

TUNNEL 'P' SECTION
STA. P 0+00 TO STA. P 8+85
SCALE: 1" = 1'-0"

TUNNEL 'P' STANCHION QUANTITIES TABLE

STANCHION REPAIR DESCRIPTION	EXPANSION	FIXED	UNIT
TOTAL REPLACEMENT	12	1	EACH
HORIZONTAL REPLACEMENT	27	0	EACH
RESET VERTICALS/HORIZONTALS	5	0	EACH

NOTE:

SEE DWG. NO. S-511 FOR STANCHION DETAILS AND DWG. NOS. S-601, S-602 AND S-603 FOR STANCHION REPAIR SCHEDULE.

CONCRETE REPAIR QUANTITIES TABLE – TUNNEL 'P'

REPAIR DESCIPTION	FLOOR	CEILING	RIGHT WALL	LEFT WALL	UNIT
REPAIR TYPE 2 – DETAIL 2, DWG. S-501	0	17	63	37	SF
REPAIR TYPE 3 – DETAIL 3, DWG. S-501	9	29	443	563	SF
REPAIR TYPE 4 – DETAIL 4, DWG. S-501	0	2	11	17	SF
JOINT REPAIR – DETAIL 6, DWG. S-501	253	253	253	253	LF

NYS OFFICE OF GENERAL SERVICES
Serving New York
ANDREW M. CUOMO
Governor
ROANN M. DESTITO
Commissioner

CONSULTANT

GPI
GREENMAN-PEDERSEN, INC.
CONSULTING ENGINEERS
80 WOLF ROAD, SUITE 300
ALBANY, NY 12205
TEL: (518) 453-9431
FAX: (518) 453-9458
WWW.GPINET.COM

WARNING:
THE ALTERATION OF THIS MATERIAL IN ANY WAY, UNLESS DONE UNDER THE DIRECTION OF A COMPARABLE PROFESSIONAL, I.E. ARCHITECT FOR AN ARCHITECT, ENGINEER FOR AN ENGINEER OR LANDSCAPE ARCHITECT FOR A LANDSCAPE ARCHITECT, IS A VIOLATION OF THE NEW YORK STATE EDUCATION LAW AND/OR REGULATIONS AND IS A CLASS 'A' MISDEMEANOR.

STATE OF NEW YORK · JOHN G. RIZZO · 077511 · LICENSED PROFESSIONAL ENGINEER

CONTRACT:
CONSTRUCTION

TITLE:
REPAIR UNDERGROUND STEAM TUNNELS

LOCATION:
WILLARD DRUG TREATMENT CENTER
7116 COUNTY ROUTE 132
WILLARD, NEW YORK

CLIENT:
DEPARTMENT OF CORRECTIONS AND COMMUNITY SUPERVISION

REVISED DRAWING
2/22/2013

MARK	DATE	DESCRIPTION
1	02/22/2013	ADDENDUM 1
	02/06/2013	BID DOCUMENT

PROJECT NUMBER:	44288-C
DESIGNED BY:	M. BORGEL
DRAWN BY:	F. CUOCCIO
FIELD CHECK:	
APPROVED:	

SHEET TITLE:
TUNNEL P
REPAIR PLAN & TYP SECT
P0+00 TO P8+85

DRAWING NUMBER:
S-101P

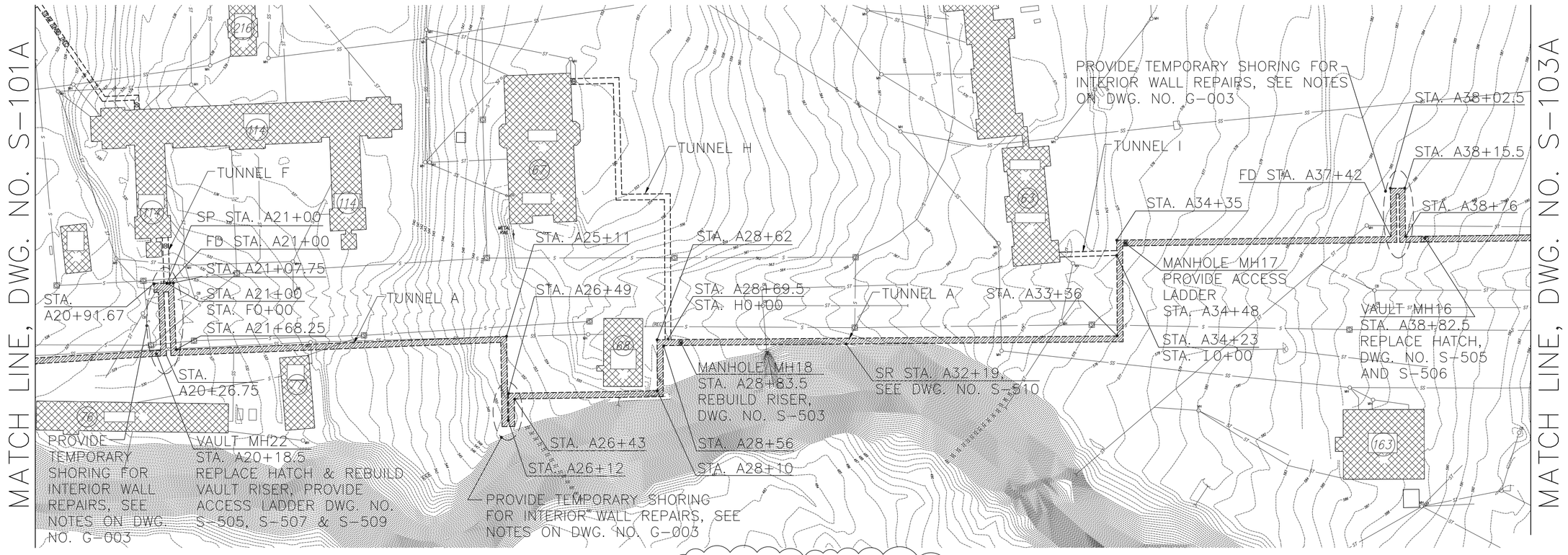

1 TUNNEL 'A' PLAN
SCALE: NONE

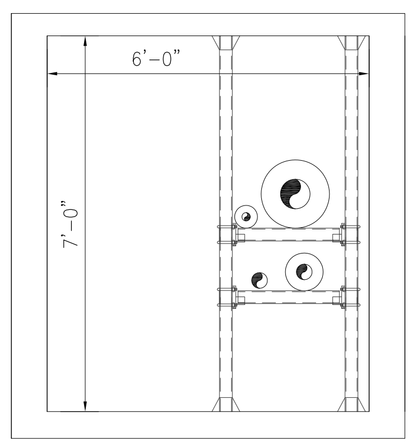

TUNNEL 'A' SECTION
STA. A 19+30 TO STA. 20+26.75
SCALE: ½" = 1'-0"

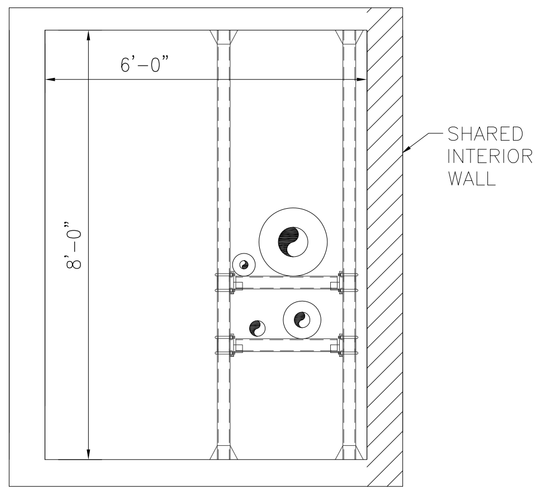

TUNNEL 'A' SECTION
STA. A 20+26.75 TO STA. A 21+16
SCALE: ½" = 1'-0"

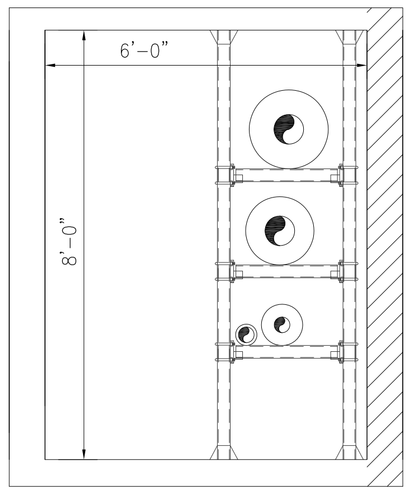

TUNNEL 'A' SECTION
STA. A 21+16 TO STA. A 21+68.25
SCALE: ½" = 1'-0"

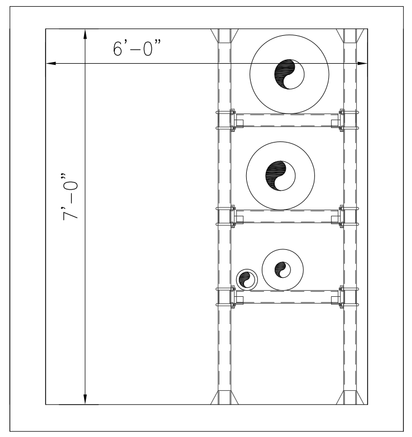

TUNNEL 'A' SECTION
STA. A 21+68.25 TO STA. A 25+76.5
STA. A 26+54 TO STA. 37+42
SCALE: ½" = 1'-0"

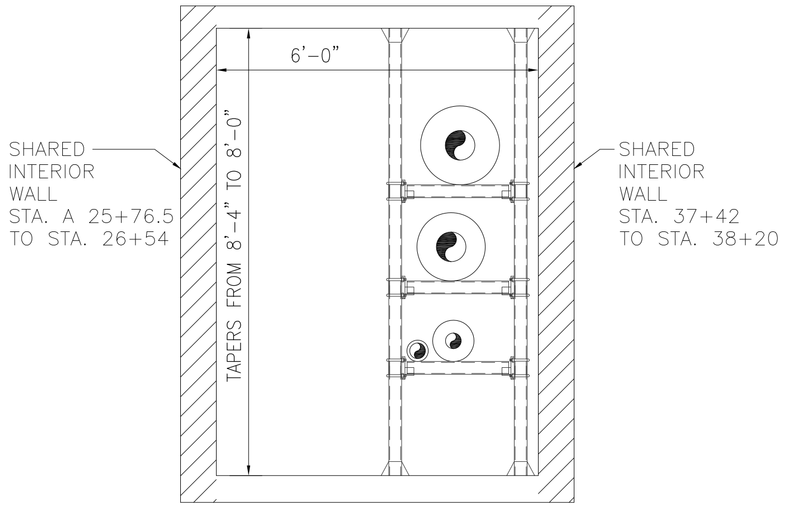

TUNNEL 'A' SECTION
STA. A 25+76.5 TO STA. A 26+54
STA. 37+42 TO STA. A 38+20
SCALE: ½" = 1'-0"

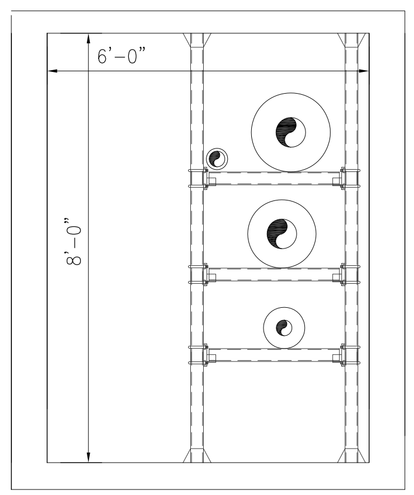

TUNNEL 'A' SECTION
STA. A 38+20 TO STA. A 38+60
SCALE: ½" = 1'-0"

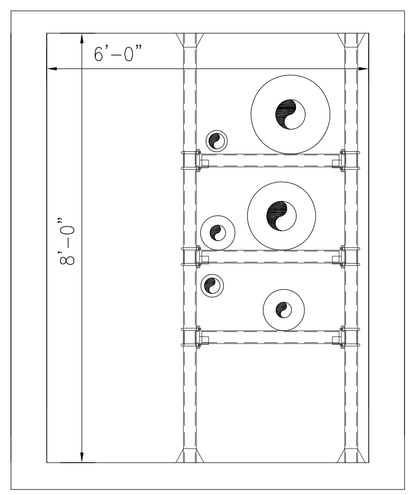

TUNNEL 'A' SECTION
STA. A 38+60 TO STA. A 38+76
SCALE: ½" = 1'-0"

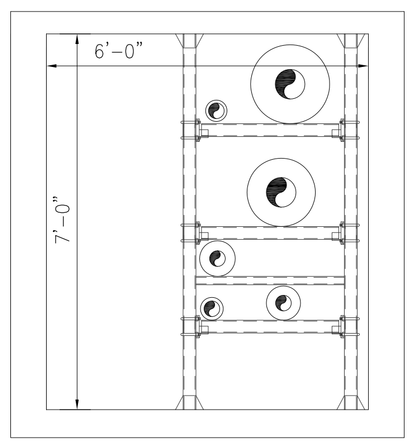

TUNNEL 'A' SECTION
STA. A 38+76 TO STA. A 38+91
SCALE: ½" = 1'-0"

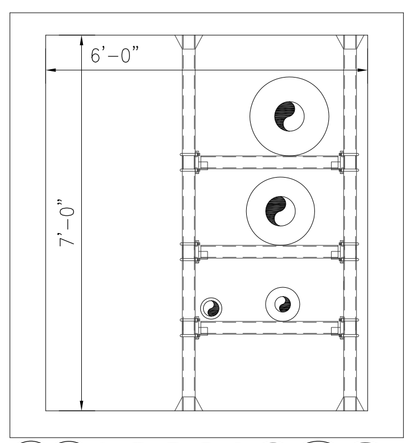

1 TUNNEL 'A' SECTION
STA. A 38+91 TO STA. A 40+40
SCALE: ½" = 1'-0"

NYS OFFICE OF GENERAL SERVICES
Serving New York
ANDREW M. CUOMO
Governor
ROANN M. DESTITO
Commissioner

CONSULTANT

GPI
GREENMAN-PEDERSEN, INC.
CONSULTING ENGINEERS
80 WOLF ROAD, SUITE 300
ALBANY, NY 12205
TEL: (518) 453-9431
FAX: (518) 453-9458
WWW.GPINET.COM

WARNING:
THE ALTERATION OF THIS MATERIAL IN ANY WAY, UNLESS DONE UNDER THE DIRECTION OF A COMPARABLE PROFESSIONAL, I.E. ARCHITECT FOR AN ARCHITECT, ENGINEER FOR AN ENGINEER OR LANDSCAPE ARCHITECT FOR A LANDSCAPE ARCHITECT, IS A VIOLATION OF THE NEW YORK STATE EDUCATION LAW AND/OR REGULATIONS AND IS A CLASS 'A' MISDEMEANOR.

STATE OF NEW YORK · JOHN G. RIZZO · 077511 · LICENSED PROFESSIONAL ENGINEER

CONTRACT:
CONSTRUCTION

TITLE:
REPAIR UNDERGROUND STEAM TUNNELS

LOCATION:
WILLARD DRUG TREATMENT CENTER
7116 COUNTY ROUTE 132
WILLARD, NEW YORK

CLIENT:
DEPARTMENT OF CORRECTIONS AND COMMUNITY SUPERVISION

REVISED DRAWING
2/22/2013

MARK	DATE	DESCRIPTION
1	02/22/2013	ADDENDUM 1
	02/06/2013	BID DOCUMENT

PROJECT NUMBER:	44288-C
DESIGNED BY:	M. BORGEL
DRAWN BY:	F. CUOCCIO
FIELD CHECK:	
APPROVED:	

SHEET TITLE:
TUNNEL A
REPAIR PLAN & TYP SECTS
A19+30 TO A40+40

DRAWING NUMBER:
S-102A

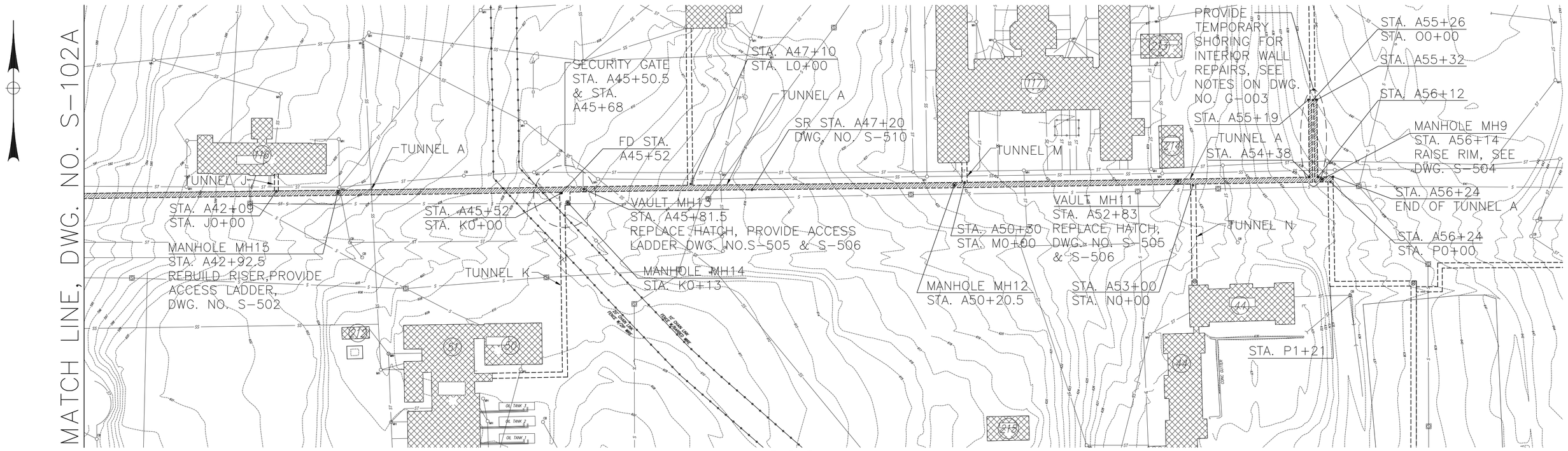

1 TUNNEL 'A' PLAN
SCALE: NONE

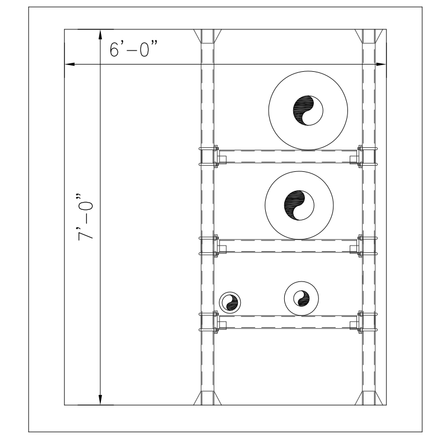

1 TUNNEL 'A' SECTION
STA. A 40+40 TO STA. A 45+52
SCALE: ½" = 1'-0"

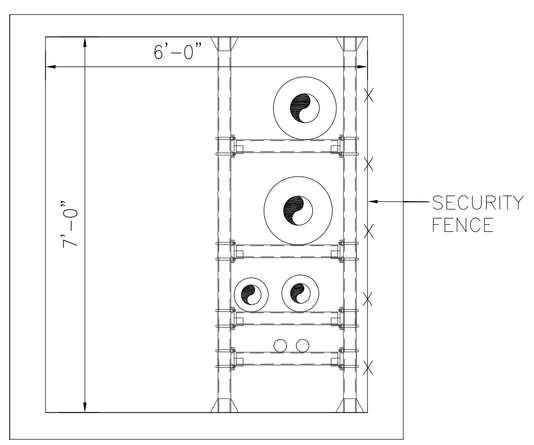

TUNNEL 'A' SECTION @ JUNCTION WITH TUNNEL K
STA. A 45+52 TO STA. A 45+70
SCALE: ½" = 1'-0"

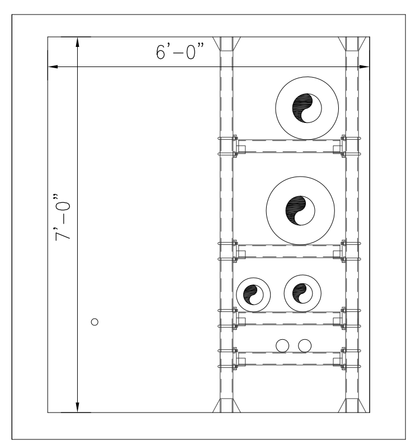

TUNNEL 'A' SECTION
STA. A 45+70 TO STA. A 47+12
STA. A 47+40 TO STA. 48+36
SCALE: ½" = 1'-0"

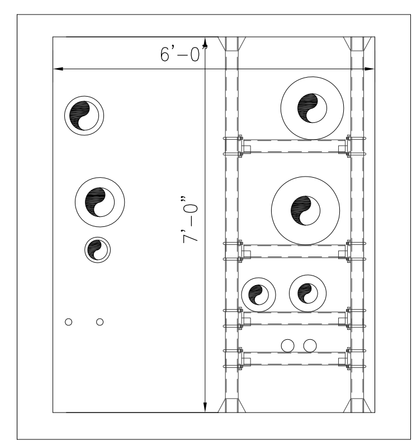

TUNNEL 'A' SECTION
STA. A 47+12 TO STA. A 47+37.5
SCALE: ½" = 1'-0"

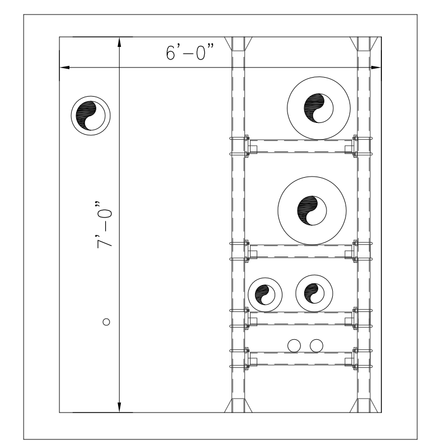

TUNNEL 'A' SECTION
STA. A 47+37.5 TO STA. A 47+40
SCALE: ½" = 1'-0"

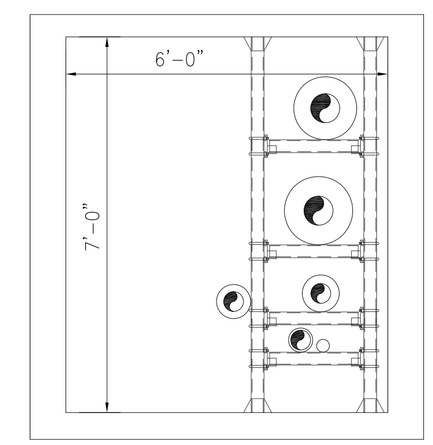

TUNNEL 'A' SECTION
STA. A 48+36 TO STA. A 50+08
STA. 53+08 TO STA. 54+61
SCALE: ½" = 1'-0"

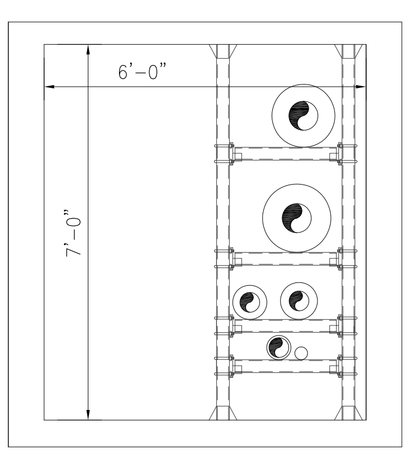

TUNNEL 'A' SECTION
STA. A 50+08 TO STA. A 53+08
SCALE: ½" = 1'-0"

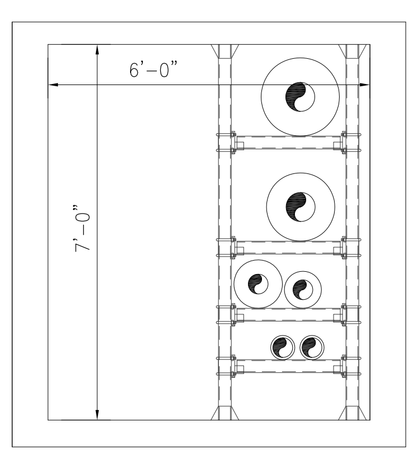

TUNNEL 'A' SECTION
STA. A 54+61 TO STA. A 55+26
SCALE: ½" = 1'-0"

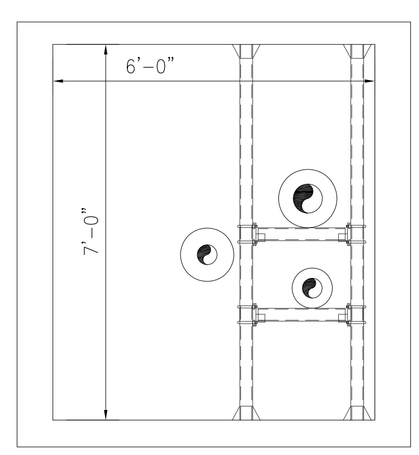

TUNNEL 'A' SECTION
STA. A 55+26 TO STA. A 56+14
SCALE: ½" = 1'-0"

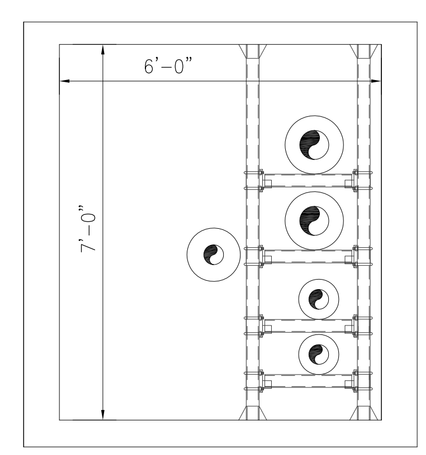

TUNNEL 'A' SECTION
STA. A 56+14 TO STA. A 56+20
SCALE: ½" = 1'-0"

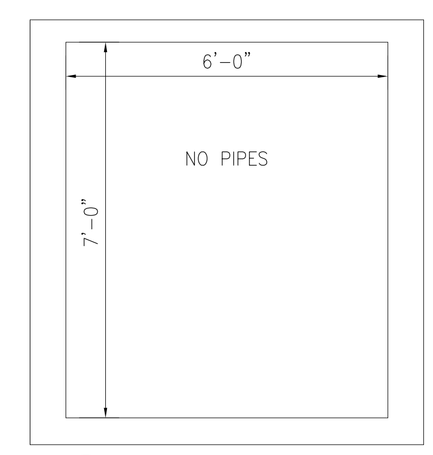

1 TUNNEL 'A' SECTION
STA. A 56+20 TO STA. A 56+24
SCALE: ½" = 1'-0"

NYS OFFICE OF GENERAL SERVICES
Serving New York
ANDREW M. CUOMO
Governor
ROANN M. DESTITO
Commissioner

CONSULTANT

GPI
GREENMAN-PEDERSEN, INC.
CONSULTING ENGINEERS
80 WOLF ROAD, SUITE 300
ALBANY, NY 12205
TEL: (518) 453-9431
FAX: (518) 453-9458
WWW.GPINET.COM

WARNING:
THE ALTERATION OF THIS MATERIAL IN ANY WAY, UNLESS DONE UNDER THE DIRECTION OF A COMPARABLE PROFESSIONAL, I.E. ARCHITECT FOR AN ARCHITECT, ENGINEER FOR AN ENGINEER OR LANDSCAPE ARCHITECT FOR A LANDSCAPE ARCHITECT, IS A VIOLATION OF THE NEW YORK STATE EDUCATION LAW AND/OR REGULATIONS AND IS A CLASS 'A' MISDEMEANOR.

STATE OF NEW YORK · JOHN G. RIZZO · 077511 · LICENSED PROFESSIONAL ENGINEER

CONTRACT:
CONSTRUCTION

TITLE:
REPAIR UNDERGROUND
STEAM TUNNELS

LOCATION:
WILLARD DRUG TREATMENT CENTER
7116 COUNTY ROUTE 132
WILLARD, NEW YORK

CLIENT:
DEPARTMENT OF CORRECTIONS
AND COMMUNITY SUPERVISION

REVISED DRAWING
2/22/2013

MARK	DATE	DESCRIPTION
1	02/22/2013	ADDENDUM 1
	02/06/2013	BID DOCUMENT

PROJECT NUMBER:	44288-C
DESIGNED BY:	M. BORGEL
DRAWN BY:	F. CUOCCIO
FIELD CHECK:	
APPROVED:	

SHEET TITLE:
1 TUNNEL A
REPAIR PLAN & TYP SECTS
A40+40 TO A56+24

DRAWING NUMBER:
S-103A

SHEET 10 OF 197

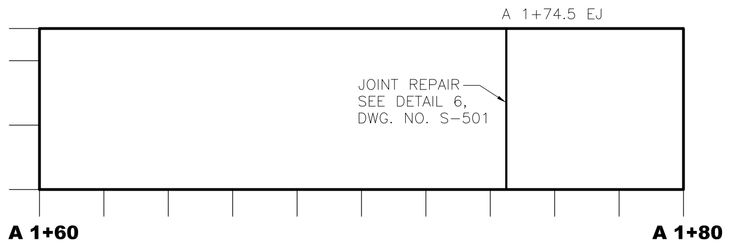

FLOOR

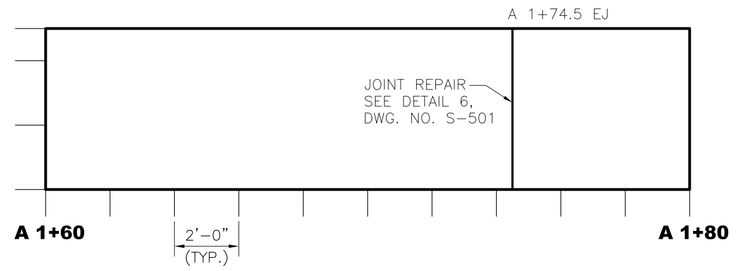

CEILING

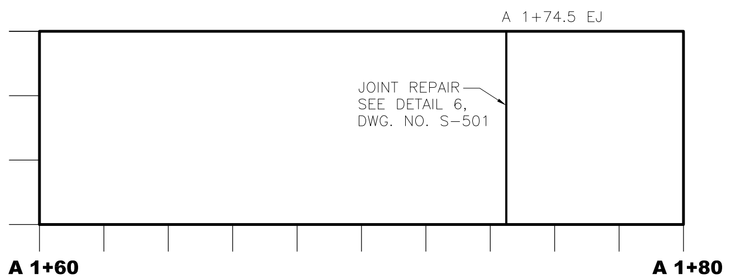

LEFT WALL

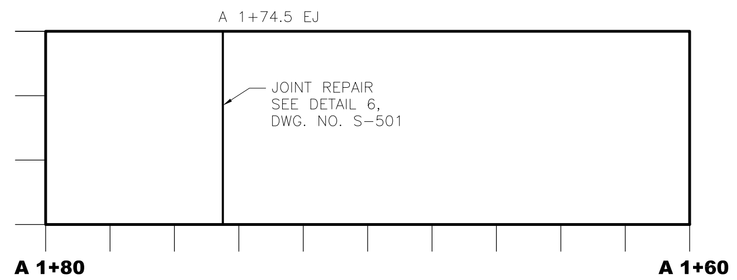

RIGHT WALL

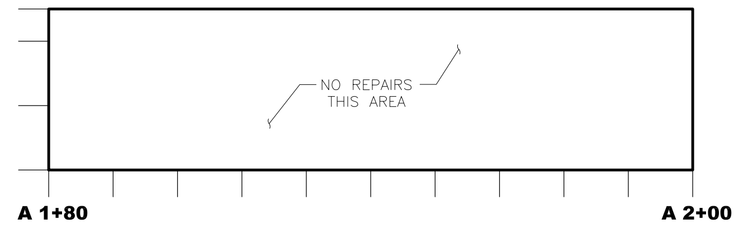

FLOOR

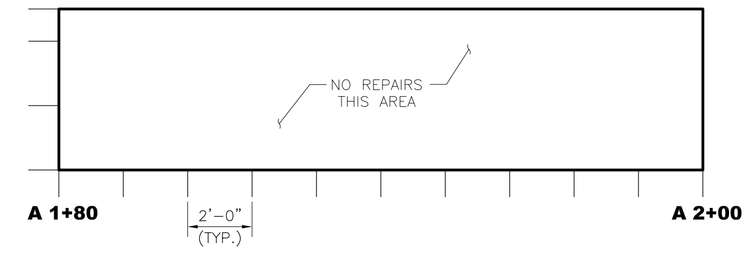

CEILING

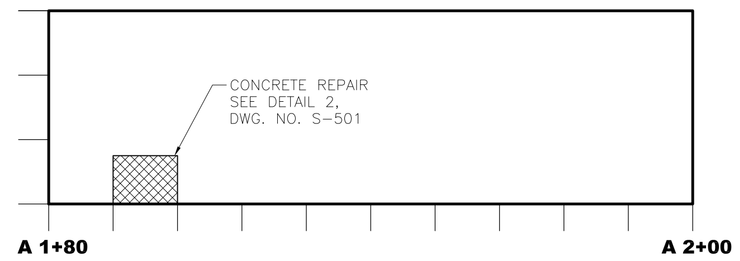

LEFT WALL

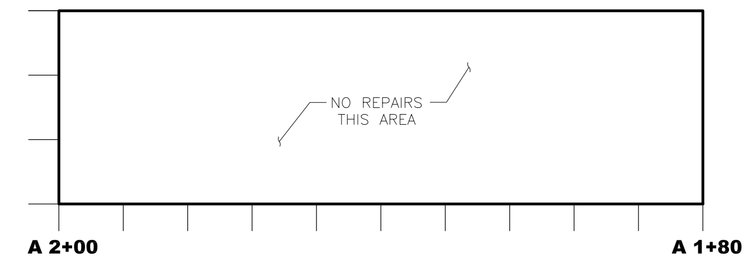

RIGHT WALL

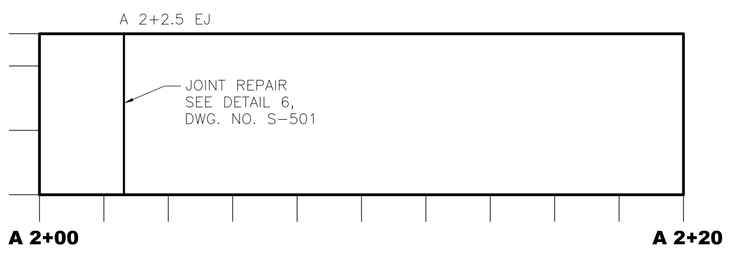

FLOOR

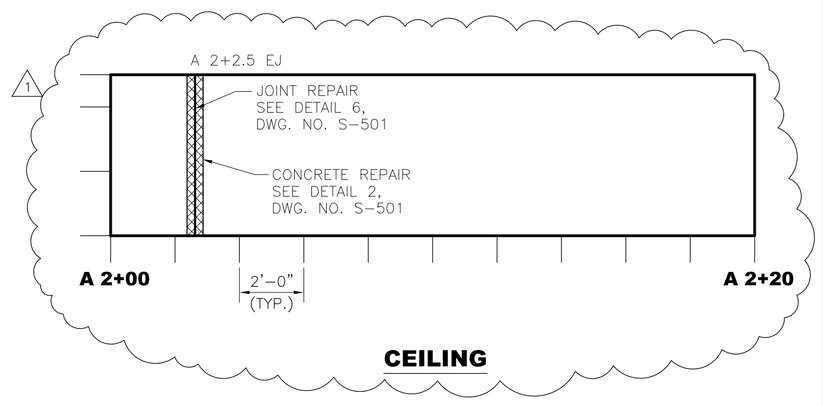

CEILING

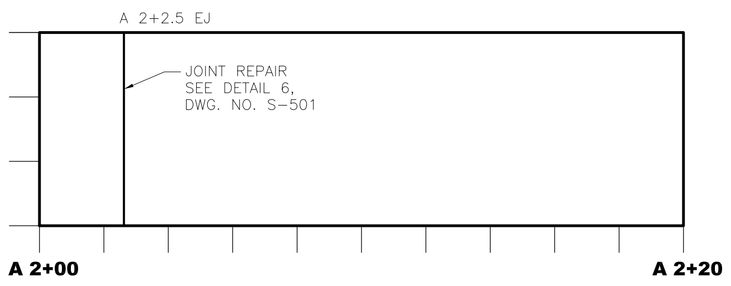

LEFT WALL

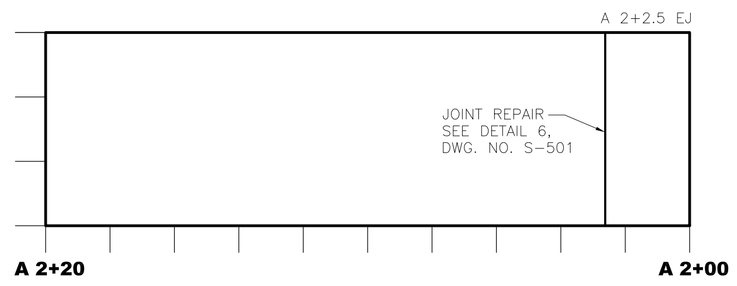

RIGHT WALL

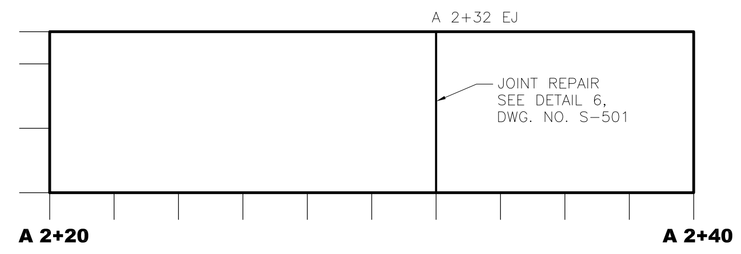

FLOOR

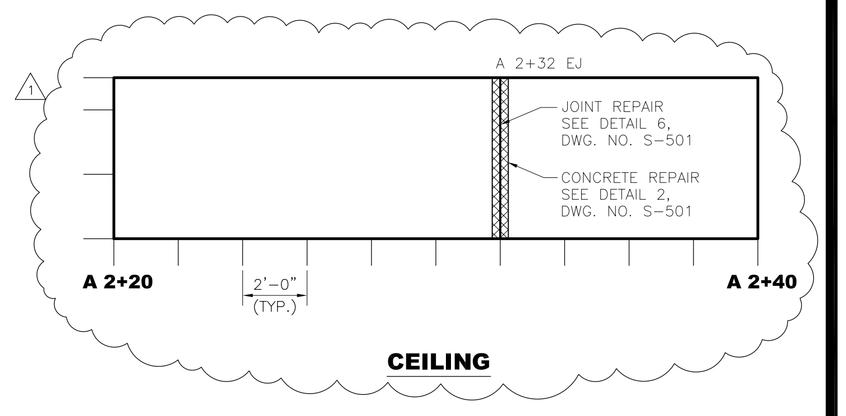

CEILING

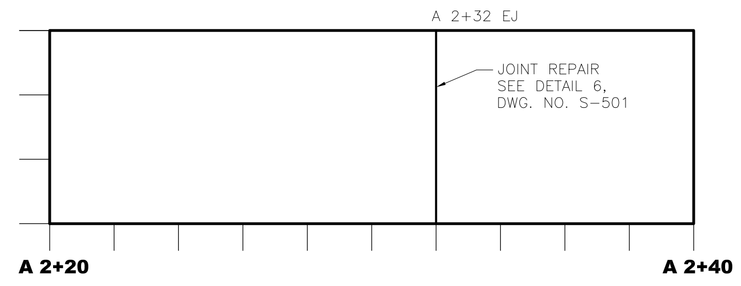

LEFT WALL

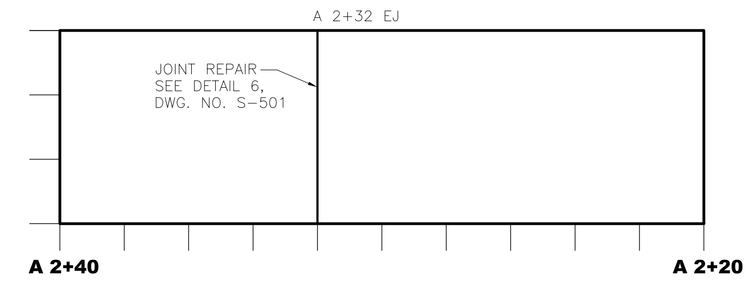

RIGHT WALL

NYS OFFICE OF GENERAL SERVICES

Serving New York

ANDREW M. CUOMO
Governor
ROANN M. DESTITO
Commissioner

CONSULTANT

GPI

GREENMAN-PEDERSEN, INC.
CONSULTING ENGINEERS

80 WOLF ROAD, SUITE 300
ALBANY, NY 12205
TEL: (518) 453-9431
FAX: (518) 453-9458
WWW.GPINET.COM

WARNING:
THE ALTERATION OF THIS MATERIAL IN ANY WAY, UNLESS DONE UNDER THE DIRECTION OF A COMPARABLE PROFESSIONAL, I.E. ARCHITECT FOR AN ARCHITECT, ENGINEER FOR AN ENGINEER OR LANDSCAPE ARCHITECT FOR A LANDSCAPE ARCHITECT, IS A VIOLATION OF THE NEW YORK STATE EDUCATION LAW AND/OR REGULATIONS AND IS A CLASS 'A' MISDEMEANOR.

STATE OF NEW YORK · JOHN G. RIZZO · 077511 · LICENSED PROFESSIONAL ENGINEER

CONTRACT:
CONSTRUCTION

TITLE:
REPAIR UNDERGROUND
STEAM TUNNELS

LOCATION:
WILLARD DRUG TREATMENT CENTER
7116 COUNTY ROUTE 132
WILLARD, NEW YORK

CLIENT:
DEPARTMENT OF CORRECTIONS
AND COMMUNITY SUPERVISION

REVISED DRAWING
2/22/2013

MARK	DATE	DESCRIPTION
1	02/22/2013	ADDENDUM 1
	02/06/2013	BID DOCUMENT

PROJECT NUMBER:	44288-C
DESIGNED BY:	M. BORGEL
DRAWN BY:	F. CUOCCIO
FIELD CHECK:	
APPROVED:	

SHEET TITLE:

TUNNEL A REPAIRS
A1+60 TO A2+40

DRAWING NUMBER:
S-106A

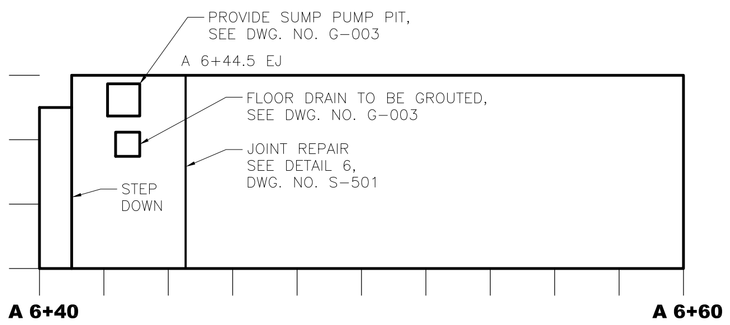

FLOOR

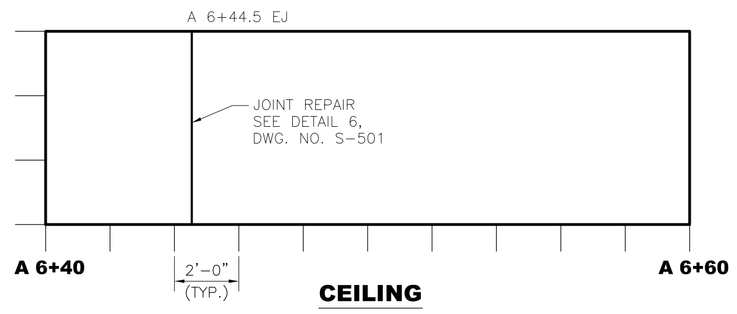

CEILING

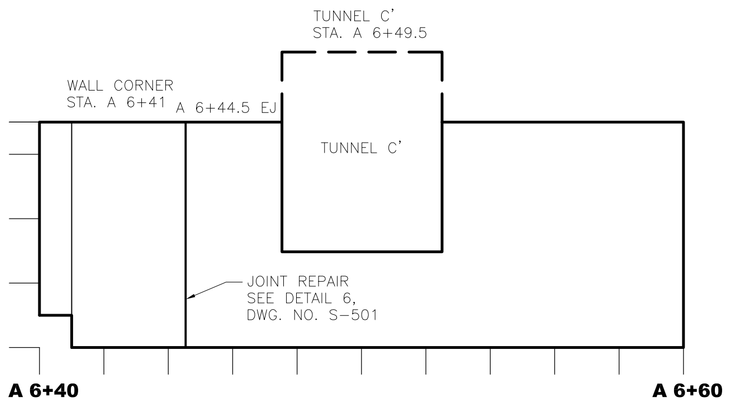

LEFT WALL

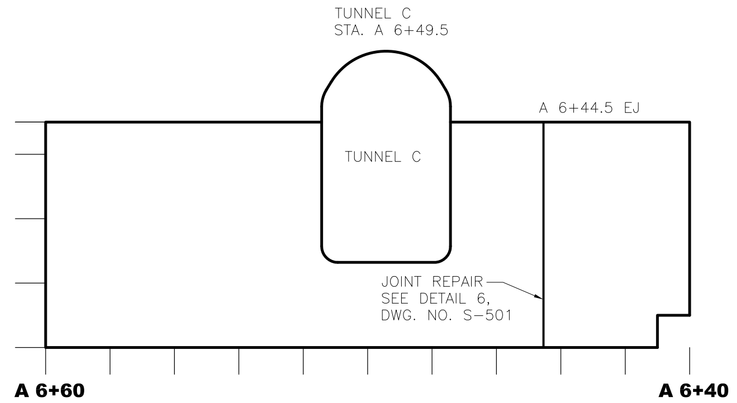

RIGHT WALL

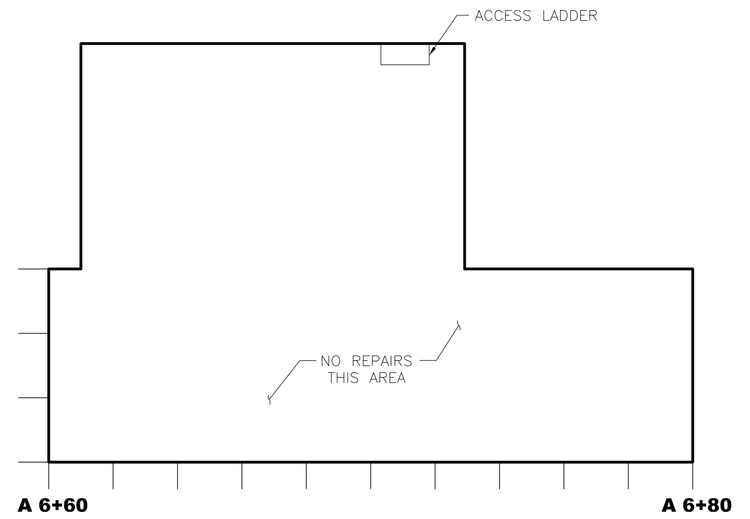

FLOOR

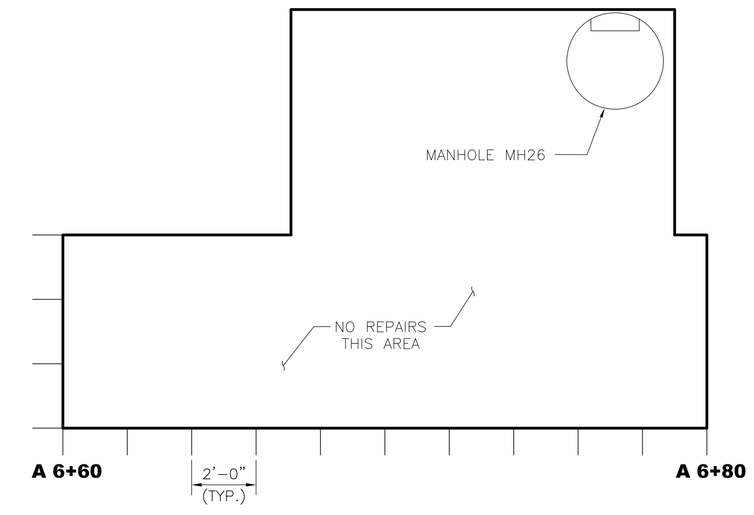

CEILING

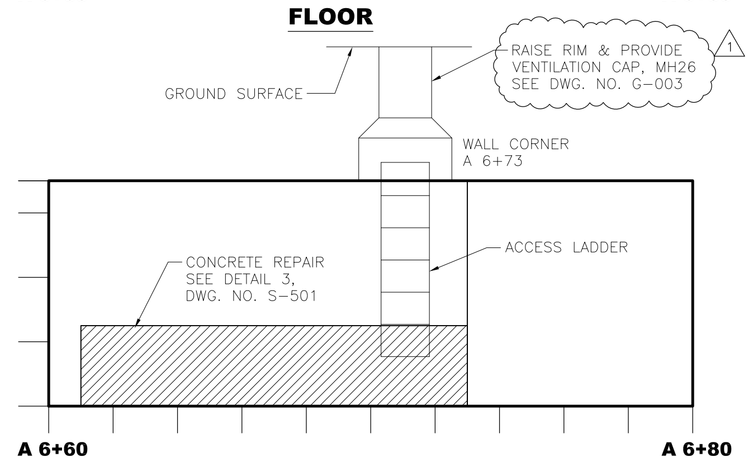

LEFT WALL

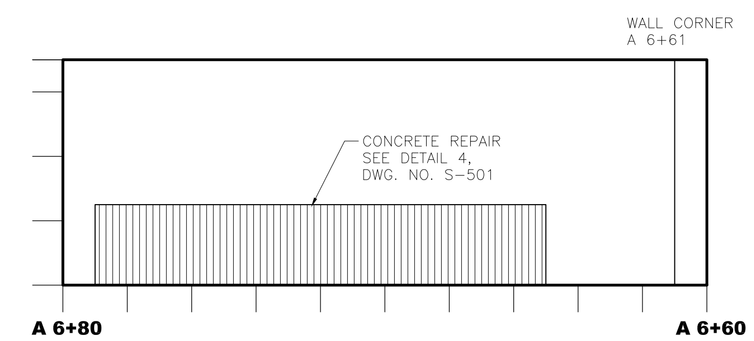

RIGHT WALL

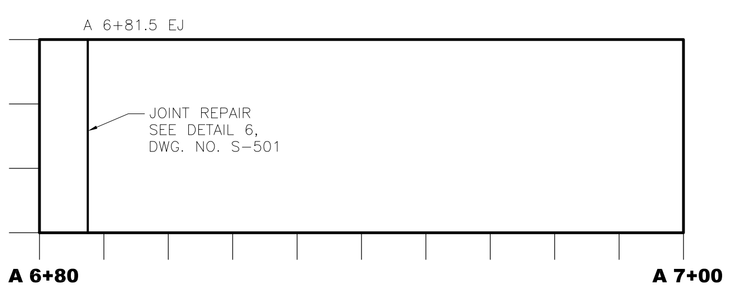

FLOOR

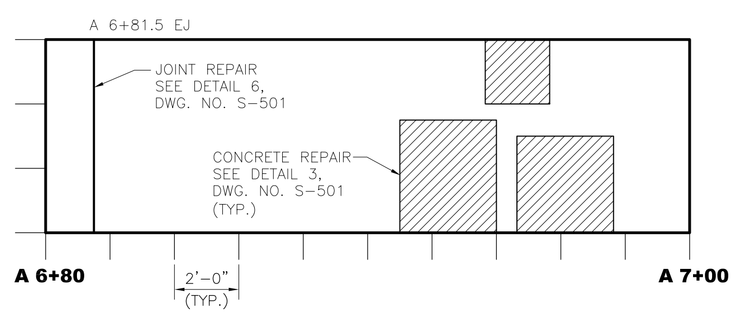

CEILING

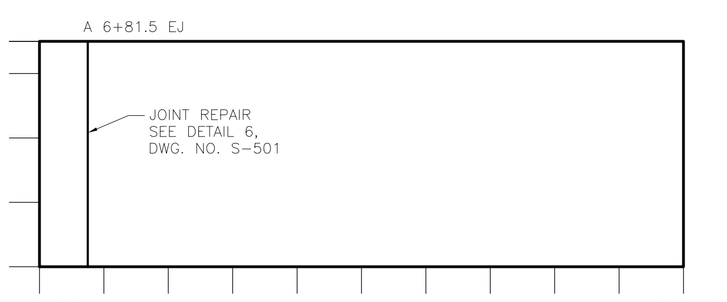

LEFT WALL

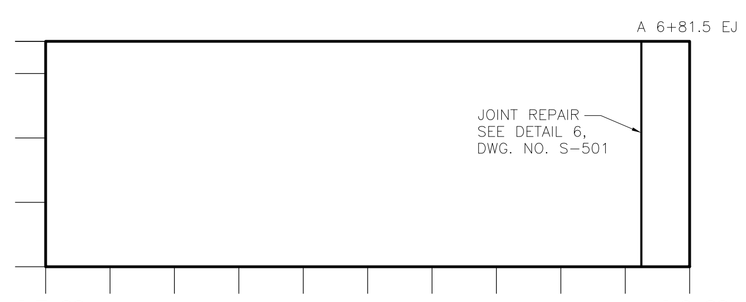

RIGHT WALL

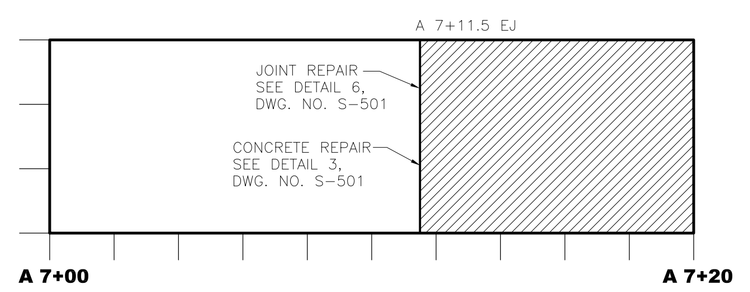

FLOOR

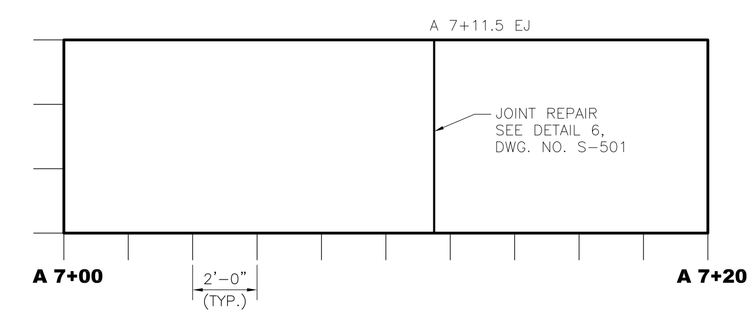

CEILING

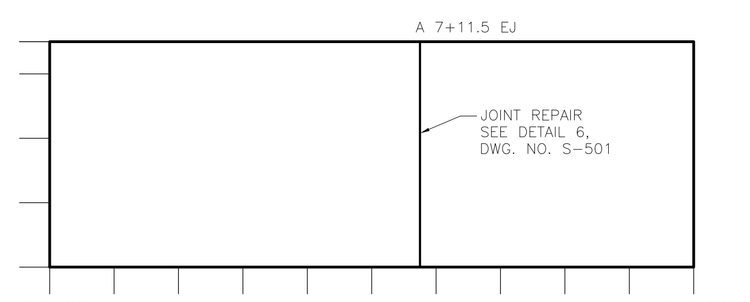

LEFT WALL

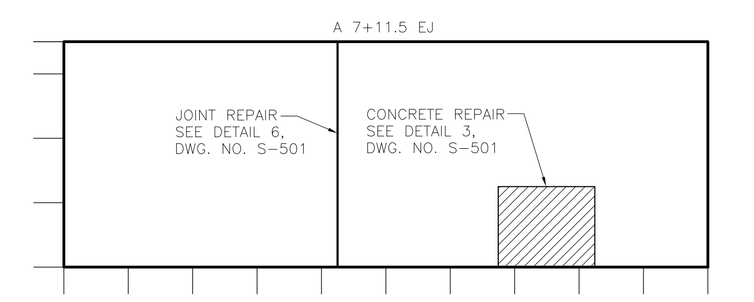

RIGHT WALL

NYS OFFICE OF GENERAL SERVICES

Serving New York

ANDREW M. CUOMO
Governor
ROANN M. DESTITO
Commissioner

CONSULTANT

GPI

GREENMAN-PEDERSEN, INC.
CONSULTING ENGINEERS

80 WOLF ROAD, SUITE 300
ALBANY, NY 12205
TEL: (518) 453-9431
FAX: (518) 453-9458
WWW.GPINET.COM

WARNING:
THE ALTERATION OF THIS MATERIAL IN ANY WAY, UNLESS DONE UNDER THE DIRECTION OF A COMPARABLE PROFESSIONAL, I.E. ARCHITECT FOR AN ARCHITECT, ENGINEER FOR AN ENGINEER OR LANDSCAPE ARCHITECT FOR A LANDSCAPE ARCHITECT, IS A VIOLATION OF THE NEW YORK STATE EDUCATION LAW AND/OR REGULATIONS AND IS A CLASS "A" MISDEMEANOR.

STATE OF NEW YORK · JOHN G. RIZZO · 077511 · LICENSED PROFESSIONAL ENGINEER

CONTRACT:
CONSTRUCTION

TITLE:
REPAIR UNDERGROUND
STEAM TUNNELS

LOCATION:
WILLARD DRUG TREATMENT CENTER
7116 COUNTY ROUTE 132
WILLARD, NEW YORK

CLIENT:
DEPARTMENT OF CORRECTIONS
AND COMMUNITY SUPERVISION

REVISED DRAWING
2/22/2013

MARK	DATE	DESCRIPTION
1	02/22/2013	ADDENDUM 1
	02/06/2013	BID DOCUMENT

PROJECT NUMBER:	44288-C
DESIGNED BY:	M. BORGEL
DRAWN BY:	F. CUOCCIO
FIELD CHECK:	
APPROVED:	

SHEET TITLE:

TUNNEL A REPAIRS
A6+40 TO A7+20

DRAWING NUMBER:
S-112A

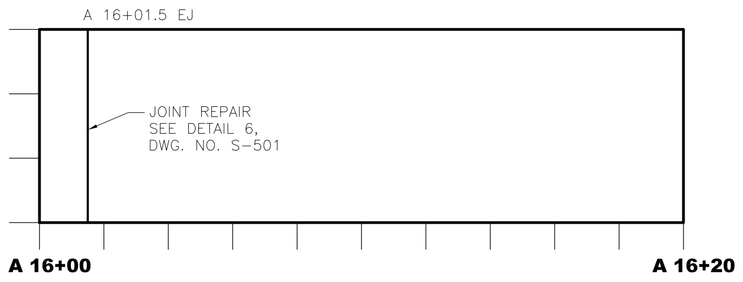

FLOOR

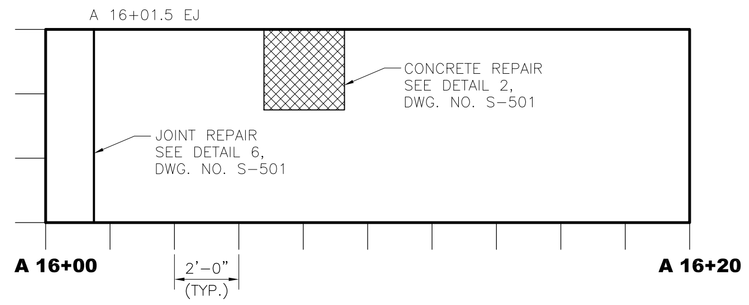

CEILING

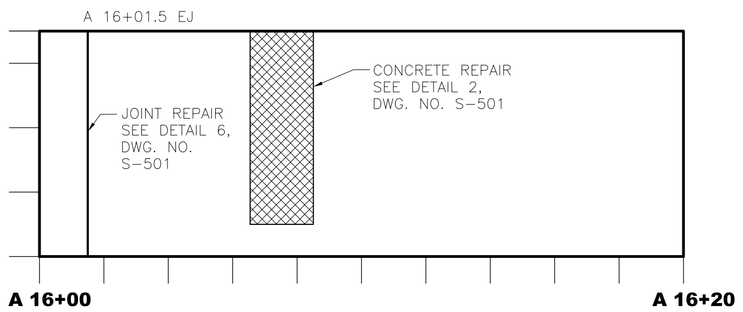

LEFT WALL

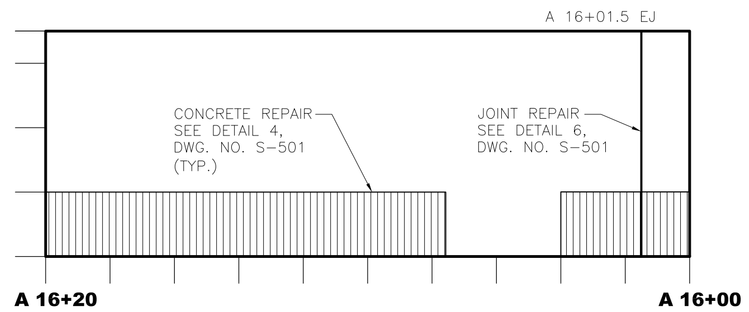

RIGHT WALL

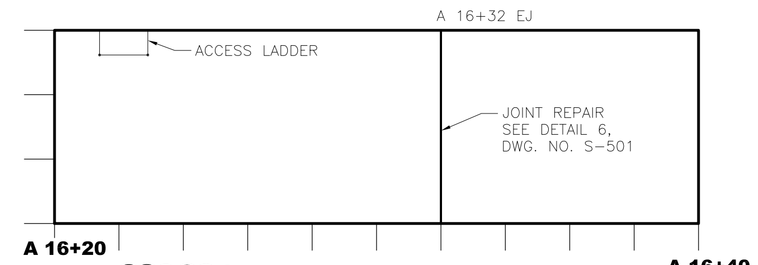

FLOOR

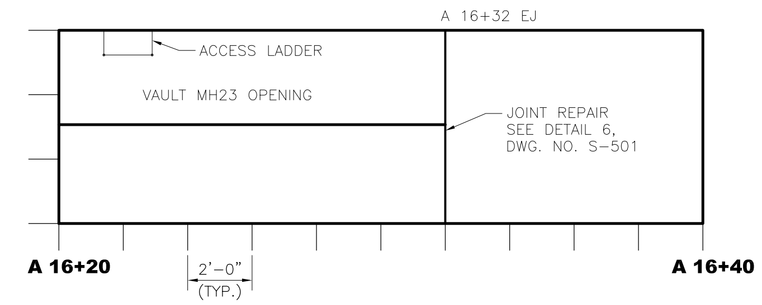

CEILING

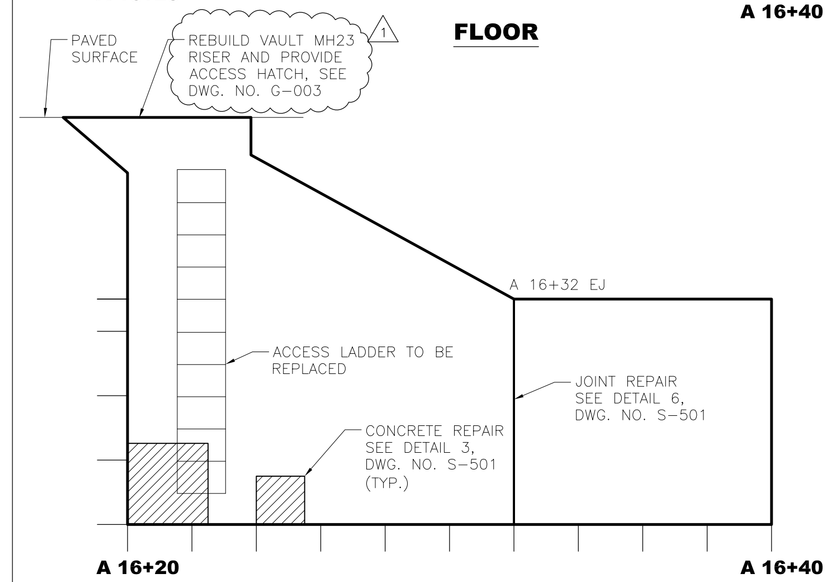

LEFT WALL

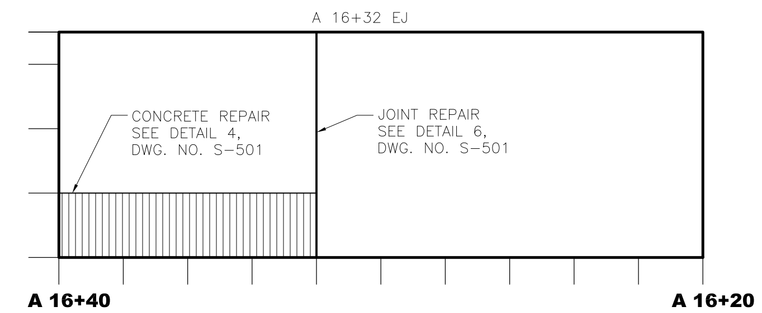

RIGHT WALL

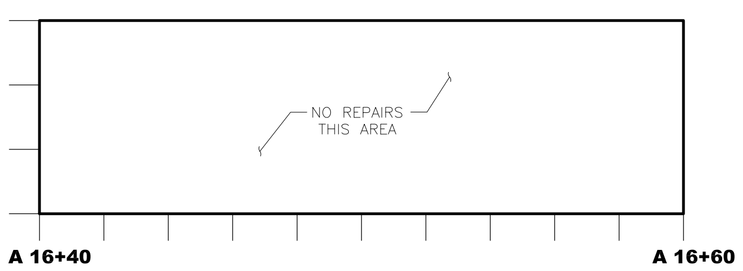

FLOOR

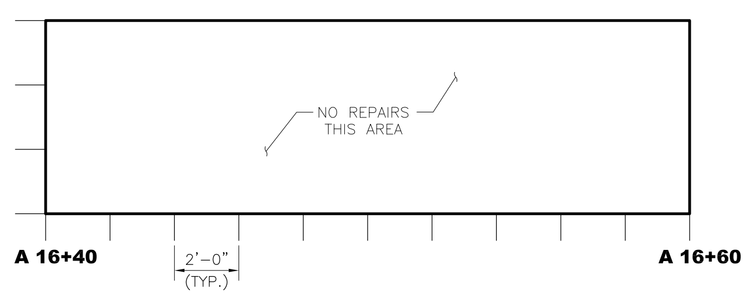

CEILING

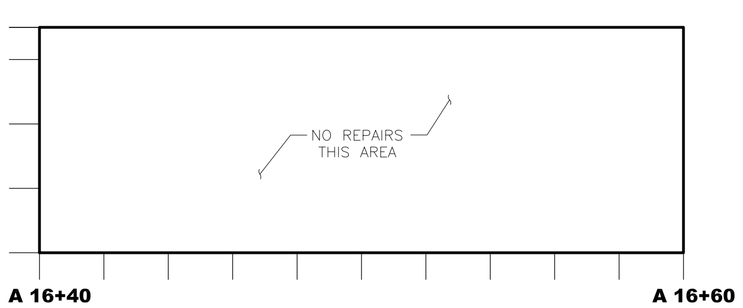

LEFT WALL

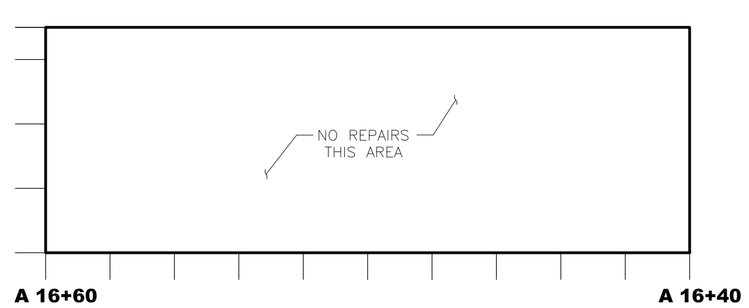

RIGHT WALL

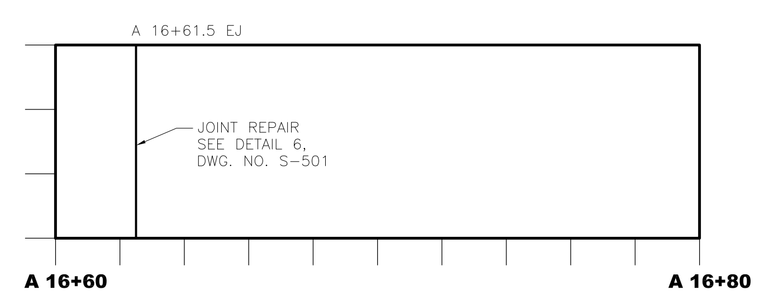

FLOOR

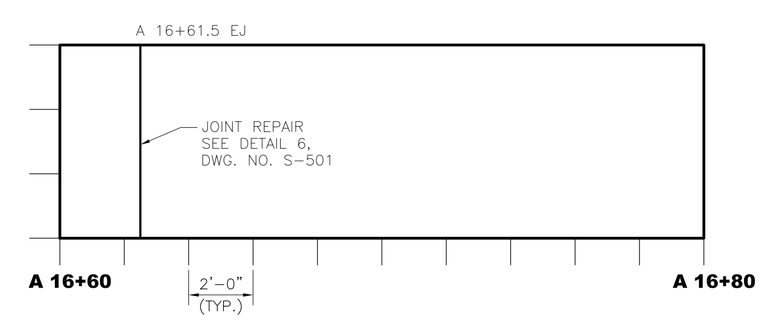

CEILING

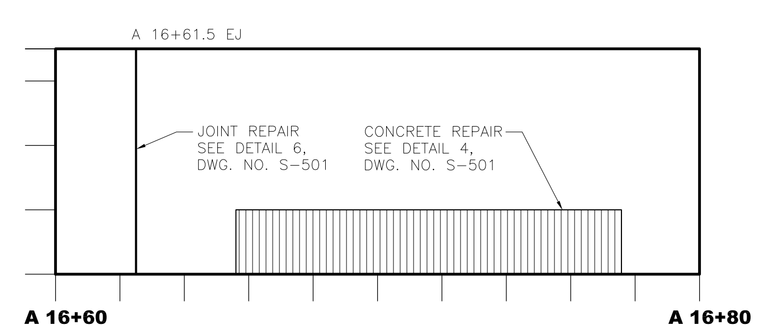

LEFT WALL

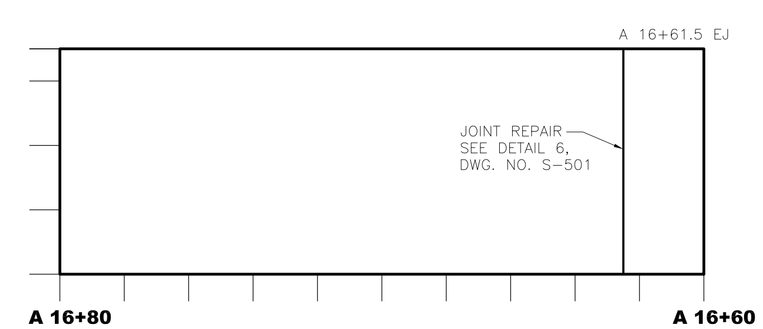

RIGHT WALL

NYS OFFICE OF GENERAL SERVICES

Serving New York

ANDREW M. CUOMO
Governor
ROANN M. DESTITO
Commissioner

CONSULTANT

GREENMAN-PEDERSEN, INC.
CONSULTING ENGINEERS

80 WOLF ROAD, SUITE 300
ALBANY, NY 12205
TEL: (518) 453-9431
FAX: (518) 453-9458
WWW.GPINET.COM

WARNING:
THE ALTERATION OF THIS MATERIAL IN ANY WAY, UNLESS DONE UNDER THE DIRECTION OF A COMPARABLE PROFESSIONAL, I.E. ARCHITECT FOR AN ARCHITECT, ENGINEER FOR AN ENGINEER OR LANDSCAPE ARCHITECT FOR A LANDSCAPE ARCHITECT, IS A VIOLATION OF THE NEW YORK STATE EDUCATION LAW AND/OR REGULATIONS AND IS A CLASS "A" MISDEMEANOR.

STATE OF NEW YORK · JOHN G. RIZZO · 077511 · LICENSED PROFESSIONAL ENGINEER

CONTRACT:
CONSTRUCTION

TITLE:
REPAIR UNDERGROUND
STEAM TUNNELS

LOCATION:
WILLARD DRUG TREATMENT CENTER
7116 COUNTY ROUTE 132
WILLARD, NEW YORK

CLIENT:
DEPARTMENT OF CORRECTIONS
AND COMMUNITY SUPERVISION

REVISED DRAWING
2/22/2013

MARK	DATE	DESCRIPTION
1	02/22/2013	ADDENDUM 1
	02/06/2013	BID DOCUMENT

PROJECT NUMBER:	44288-C
DESIGNED BY:	M. BORGEL
DRAWN BY:	F. CUOCCIO
FIELD CHECK:	
APPROVED:	

SHEET TITLE:
TUNNEL A REPAIRS
A16+00 TO A16+80

DRAWING NUMBER:
S-124A

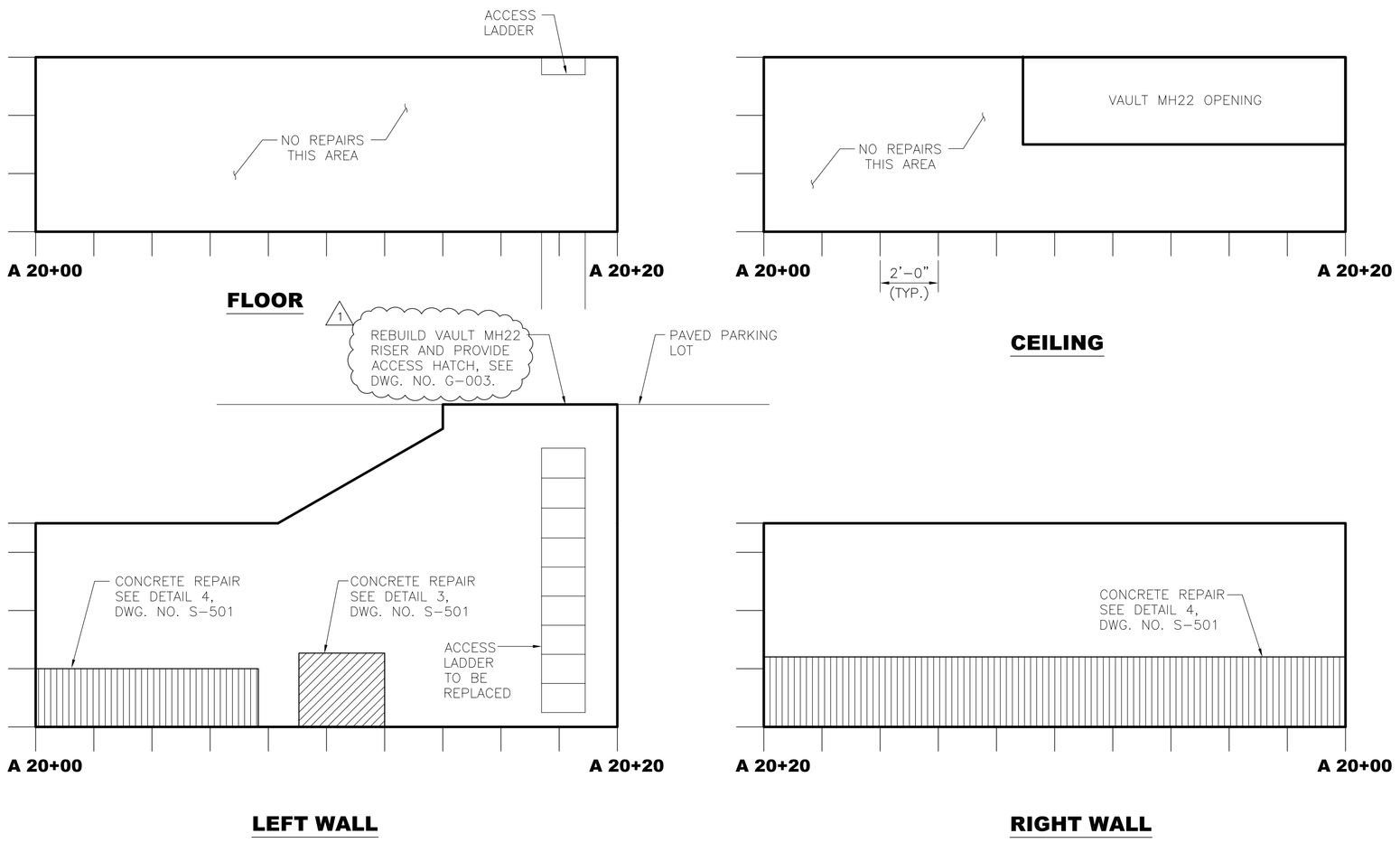

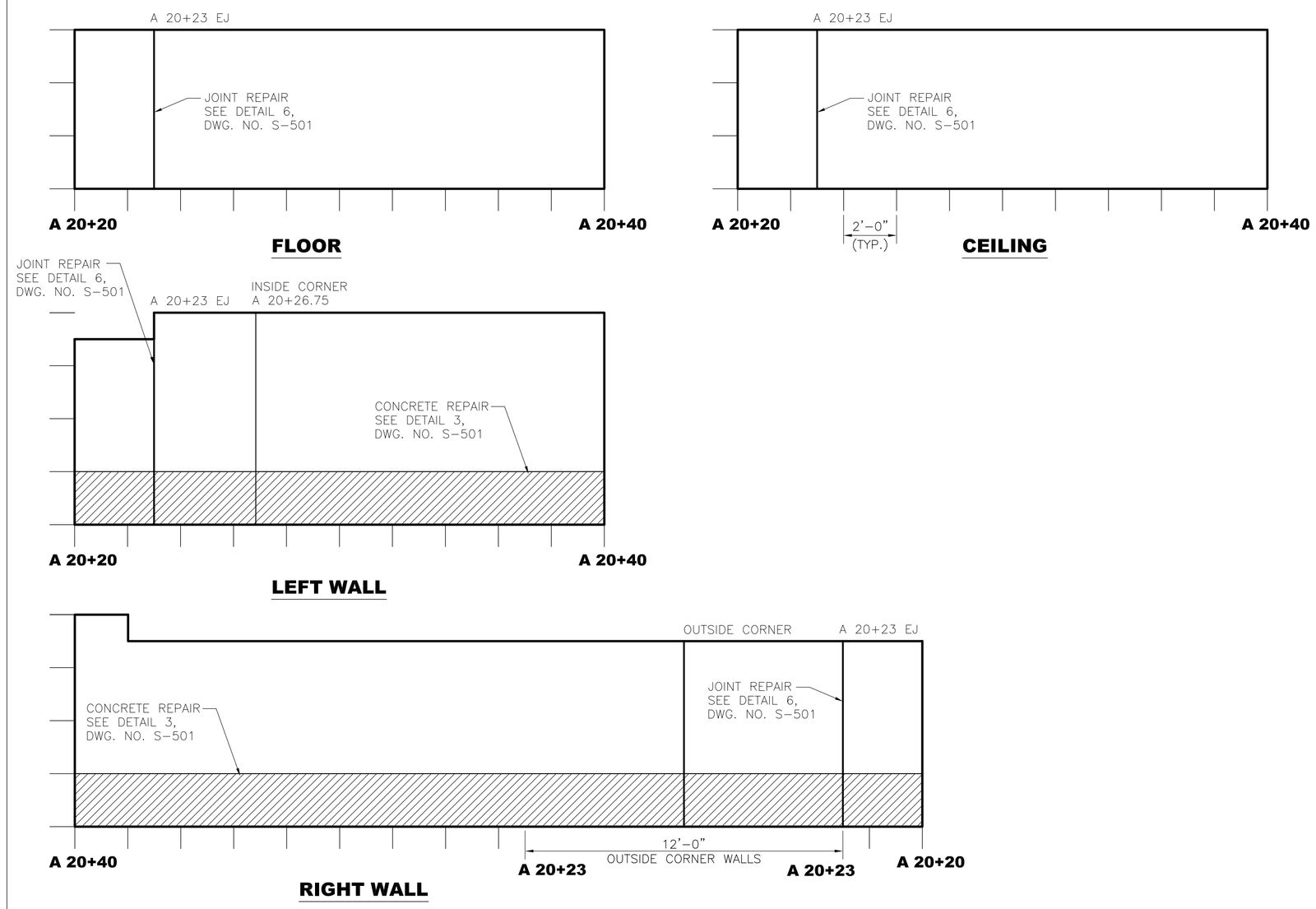

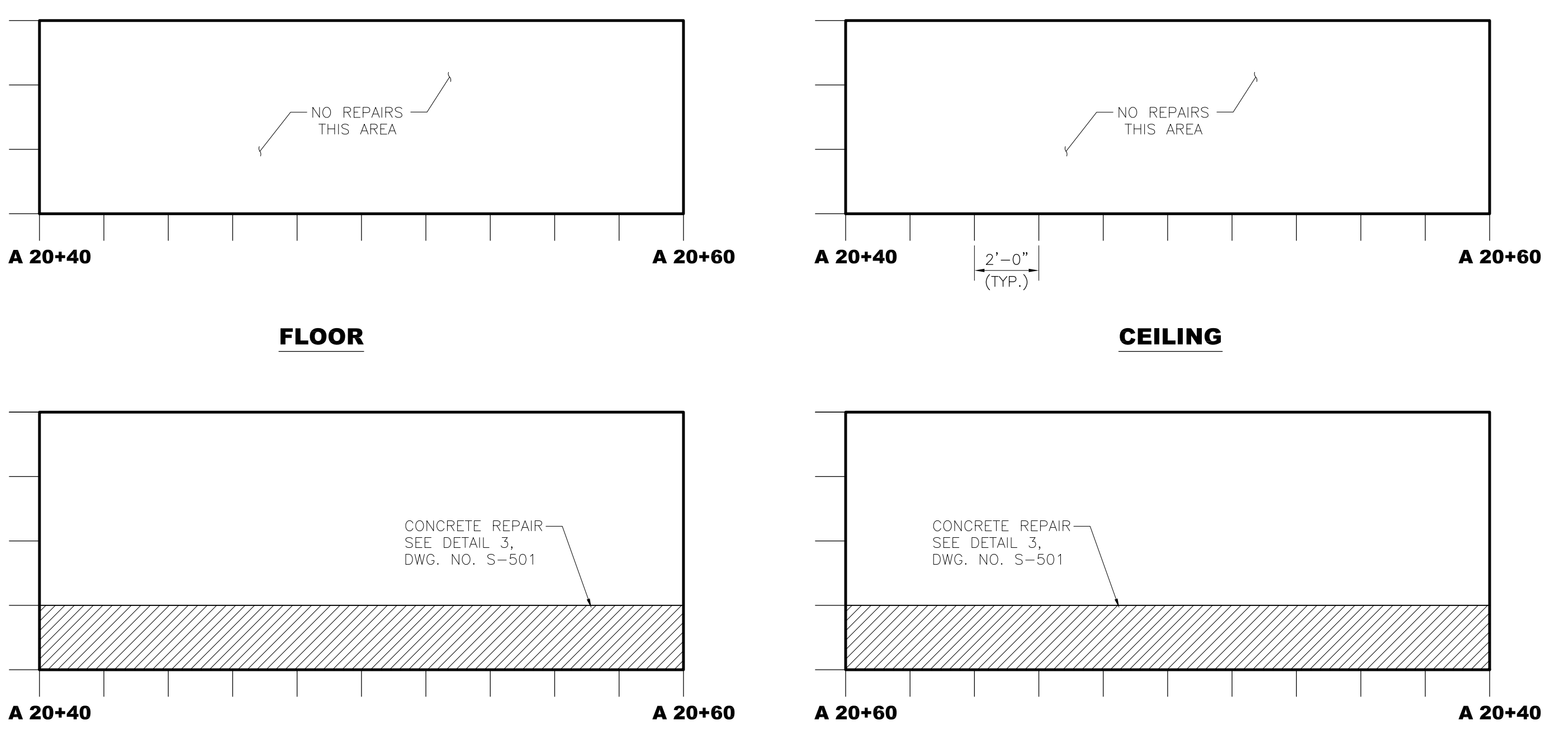

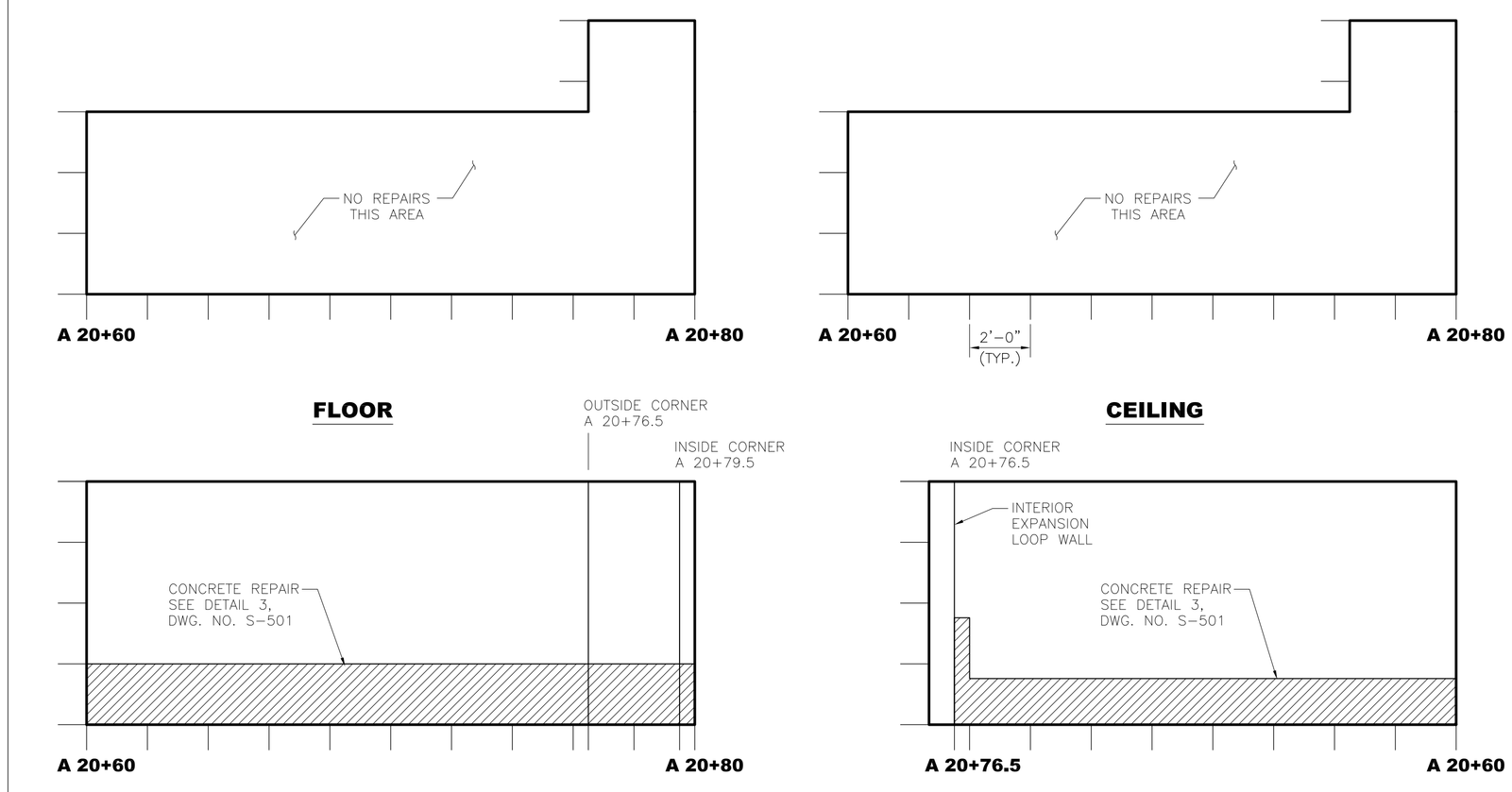

NYS OFFICE OF GENERAL SERVICES

Serving New York

ANDREW M. CUOMO
Governor
ROANN M. DESTITO
Commissioner

CONSULTANT

GREENMAN-PEDERSEN, INC.
CONSULTING ENGINEERS

80 WOLF ROAD, SUITE 300
ALBANY, NY 12205
TEL: (518) 453-9431
FAX: (518) 453-9458
WWW.GPINET.COM

WARNING:
THE ALTERATION OF THIS MATERIAL IN ANY WAY, UNLESS DONE UNDER THE DIRECTION OF A COMPARABLE PROFESSIONAL, I.E. ARCHITECT FOR AN ARCHITECT, ENGINEER FOR AN ENGINEER OR LANDSCAPE ARCHITECT FOR A LANDSCAPE ARCHITECT, IS A VIOLATION OF THE NEW YORK STATE EDUCATION LAW AND/OR REGULATIONS AND IS A CLASS 'A' MISDEMEANOR.

STATE OF NEW YORK · JOHN G. RIZZO · 077511 · LICENSED PROFESSIONAL ENGINEER

CONTRACT:
CONSTRUCTION

TITLE:
REPAIR UNDERGROUND STEAM TUNNELS

LOCATION:
WILLARD DRUG TREATMENT CENTER
7116 COUNTY ROUTE 132
WILLARD, NEW YORK

CLIENT:
DEPARTMENT OF CORRECTIONS AND COMMUNITY SUPERVISION

REVISED DRAWING
2/22/2013

MARK	DATE	DESCRIPTION
1	02/22/2013	ADDENDUM 1
	02/06/2013	BID DOCUMENT

PROJECT NUMBER:	44288-C
DESIGNED BY:	M. BORGEL
DRAWN BY:	F. CUOCCIO
FIELD CHECK:	
APPROVED:	

SHEET TITLE:
TUNNEL A REPAIRS
A20+00 TO A20+80

DRAWING NUMBER:
S-129A

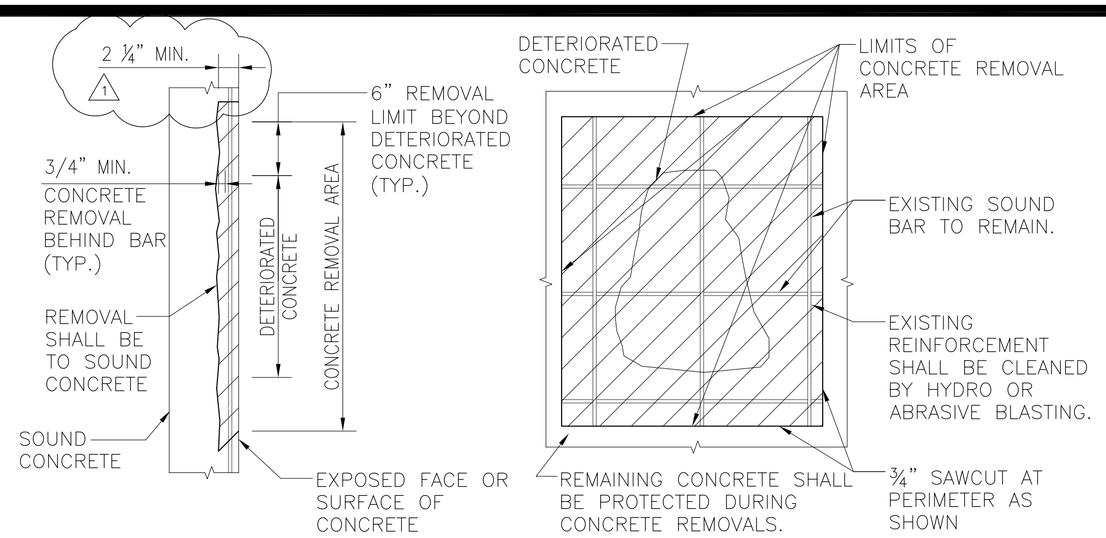

1 REMOVAL OF CONCRETE

SCALE: 1"=1'-0"

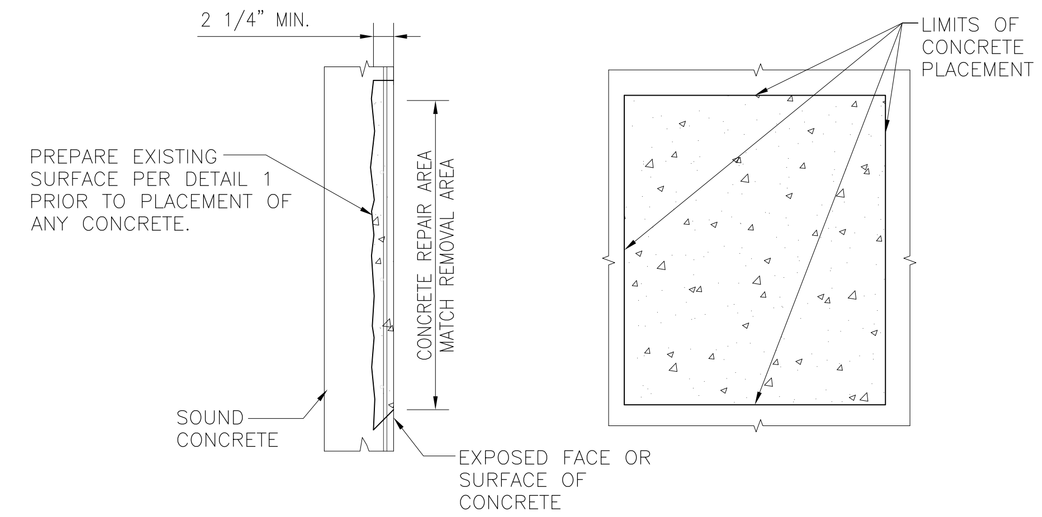

2 SHALLOW CONCRETE REPAIR

SCALE: 1"=1'-0"

NOTES:

1. THE CONTRACTOR SHALL ACCOUNT FOR ALL LOCATIONS THAT NEED SHORING IN ORDER TO ENSURE THE STRUCTURAL STABILITY OF THE TUNNEL DURING THE REPAIR TIME. THESE LOCATIONS ARE IDENTIFIED ON THE GENERAL TUNNEL LOCATION PLANS.

2. EXISTING REINFORCEMENT SHALL BE HYDRO OR ABRASIVE BLASTED CLEAN, FREE OF ANY CORROSION OR RUST AND PRIMED PRIOR TO CONCRETE PLACEMENT.

3. IF DURING CONCRETE REMOVAL, REINFORCEMENT IS FOUND TO HAVE LESS THAN ¾" COVER, REPAIR SHALL BE MADE IN ACCORDANCE WITH DETAIL 4, THIS SHEET.

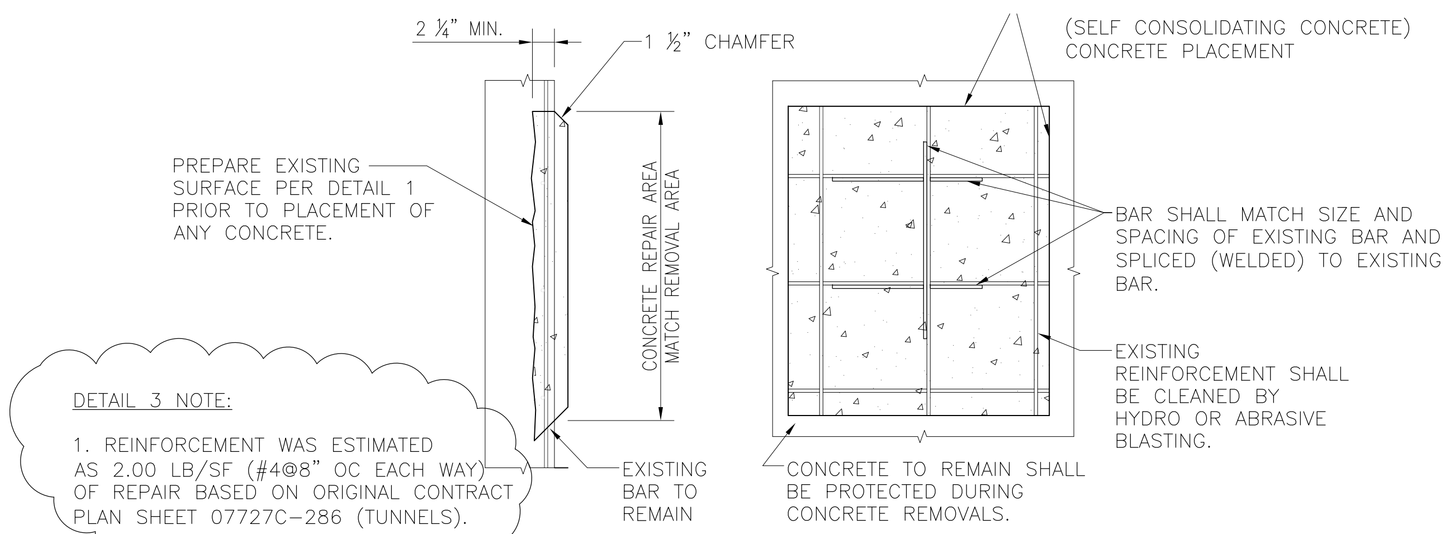

DETAIL 3 NOTE:

1. REINFORCEMENT WAS ESTIMATED AS 2.00 LB/SF (#4@8" OC EACH WAY) OF REPAIR BASED ON ORIGINAL CONTRACT PLAN SHEET 07727C-286 (TUNNELS). 1

3 CONCRETE AND REINFORCEMENT REPAIR

SCALE: 1"=1'-0"

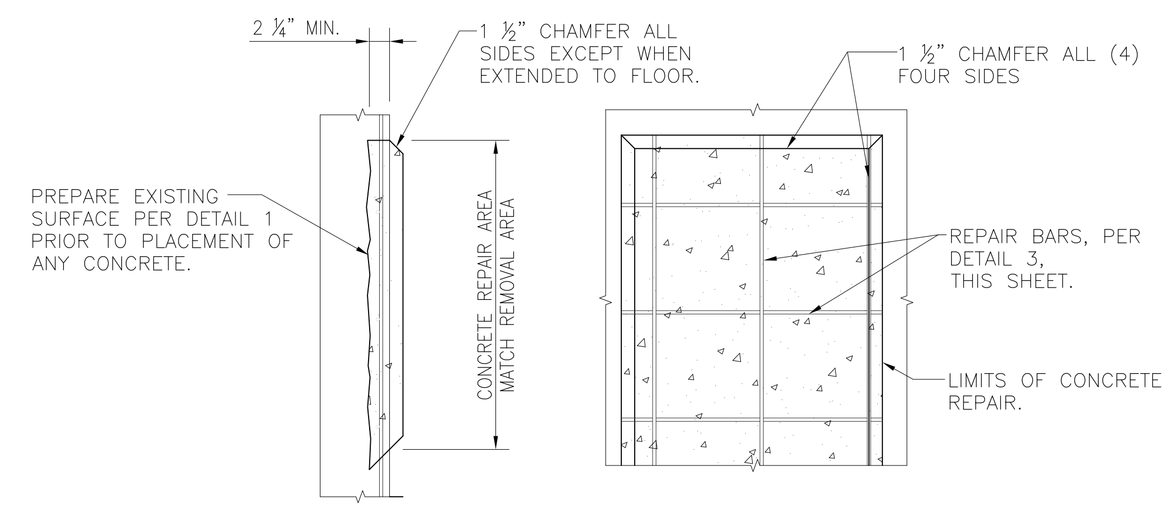

4 CONCRETE REPAIR WITH ADDITIONAL COVER

SCALE: 1"=1'-0"

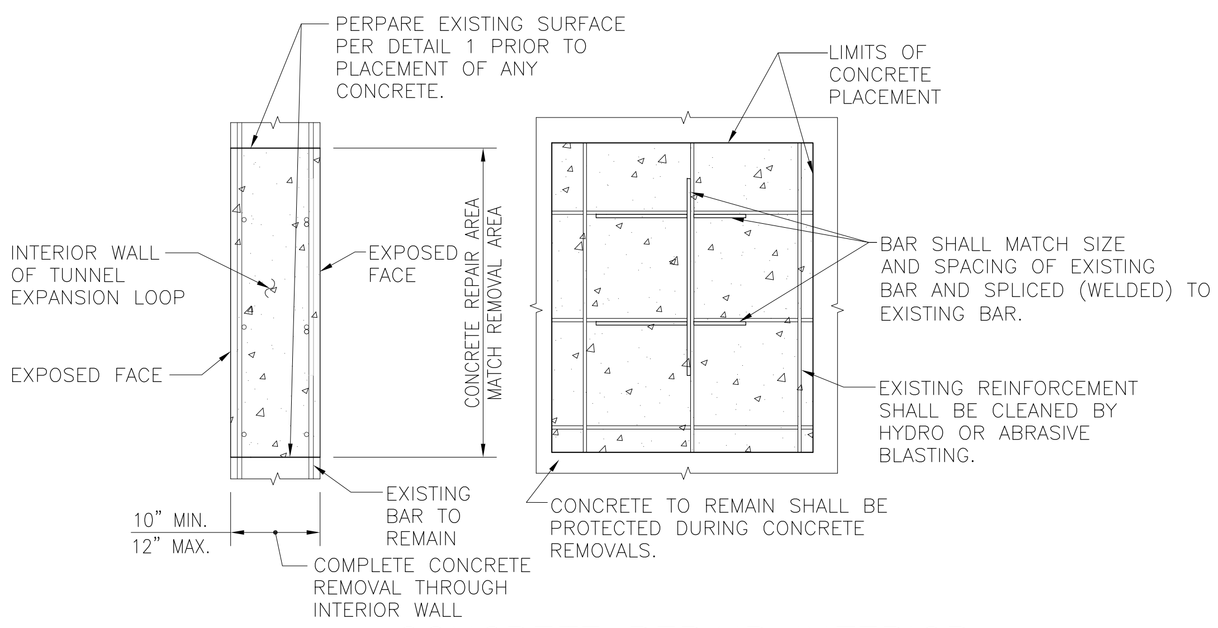

5 CONCRETE REPAIR INTERIOR TUNNEL EXPANSION LOOP WALL

SCALE: 1"=1'-0"

1. THE INTERIOR TUNNEL EXPANSION LOOP WALL IS EXPOSED TO THE TUNNEL ON BOTH SIDES. THE PIPES AND STANCHIONS ARE ADJACENT TO THIS WALL. WHERE DESIGNATED THE ENTIRE CONCRETE SECTION SHALL BE REMOVED AND REPAIRED WITH CONCRETE AND REINFORCEMENT.

2. THE INTERIOR TUNNEL EXPANSION LOOP WALL REPAIRS WILL REQUIRE TUNNEL SHORING DURING THE COURSE OF THE REPAIR. SEE G-002 AND G-003 FOR TUNNEL SHORING NOTES.

3. REINFORCEMENT WAS ESTIMATED AS 2.00 LB/SF EACH FACE (#4@8" OC, EACH WAY) OF REPAIR BASED ON ORIGINAL CONTRACT PLAN SHEET 07727C-286 (TUNNELS). 1

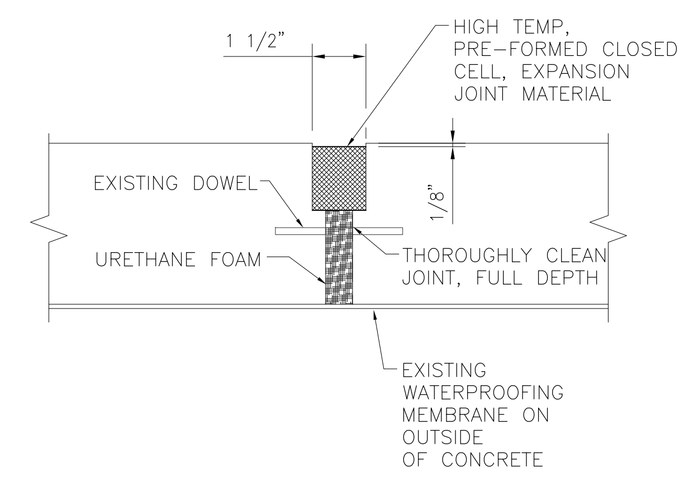

6 JOINT REPAIR W/REBAR

SCALE: 3"=1'-0"

NYS OFFICE OF GENERAL SERVICES

Serving New York

ANDREW M. CUOMO
Governor
ROANN M. DESTITO
Commissioner

CONSULTANT

GPI

GREENMAN-PEDERSEN, INC.
CONSULTING ENGINEERS

80 WOLF ROAD, SUITE 300
ALBANY, NY 12205
TEL: (518) 453-9431
FAX: (518) 453-9458
WWW.GPINET.COM

WARNING:

THE ALTERATION OF THIS MATERIAL IN ANY WAY, UNLESS DONE UNDER THE DIRECTION OF A COMPARABLE PROFESSIONAL, I.E. ARCHITECT FOR AN ARCHITECT, ENGINEER FOR AN ENGINEER OR LANDSCAPE ARCHITECT FOR A LANDSCAPE ARCHITECT, IS A VIOLATION OF THE NEW YORK STATE EDUCATION LAW AND/OR REGULATIONS AND IS A CLASS 'A' MISDEMEANOR.

STATE OF NEW YORK · JOHN G. RIZZO · 077511 · LICENSED PROFESSIONAL ENGINEER

CONTRACT:
CONSTRUCTION

TITLE:
REPAIR UNDERGROUND STEAM TUNNELS

LOCATION:
WILLARD DRUG TREATMENT CENTER
7116 COUNTY ROUTE 132
WILLARD, NEW YORK

CLIENT:
DEPARTMENT OF CORRECTIONS AND COMMUNITY SUPERVISION

REVISED DRAWING
2/22/2013

MARK	DATE	DESCRIPTION
1	02/22/2013	ADDENDUM 1
	02/06/2013	BID DOCUMENT

PROJECT NUMBER:	44288-C
DESIGNED BY:	M. BORGEL
DRAWN BY:	F. CUOCCIO
FIELD CHECK:	
APPROVED:	

SHEET TITLE:
CONCRETE DETAILS & NOTES

DRAWING NUMBER:
S-501

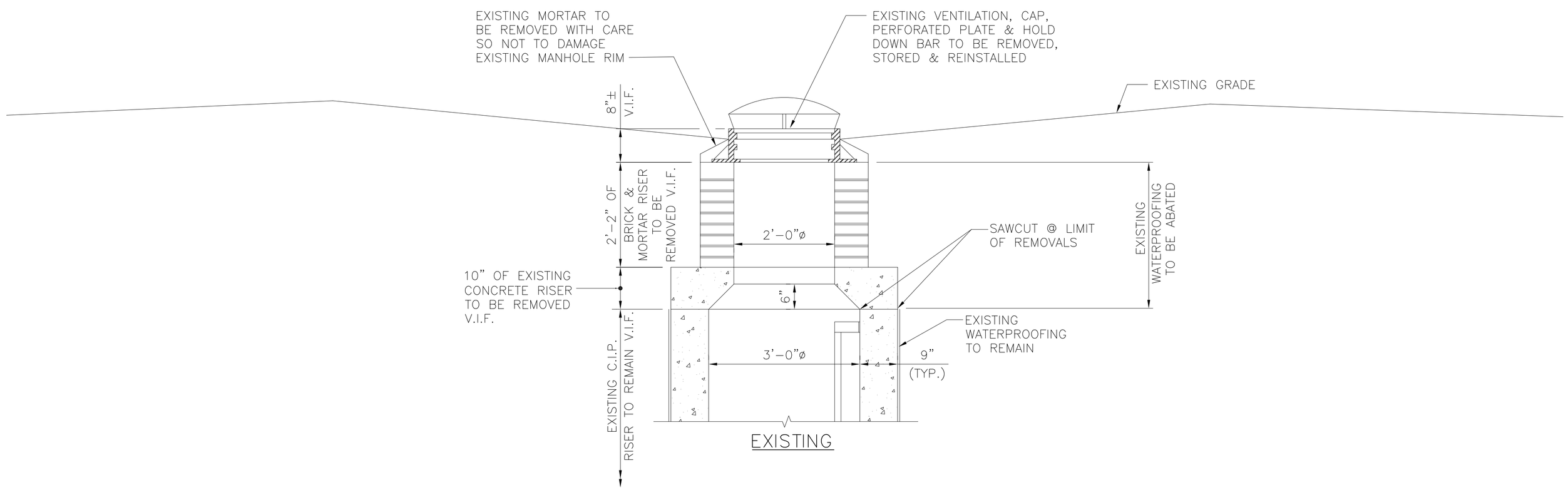

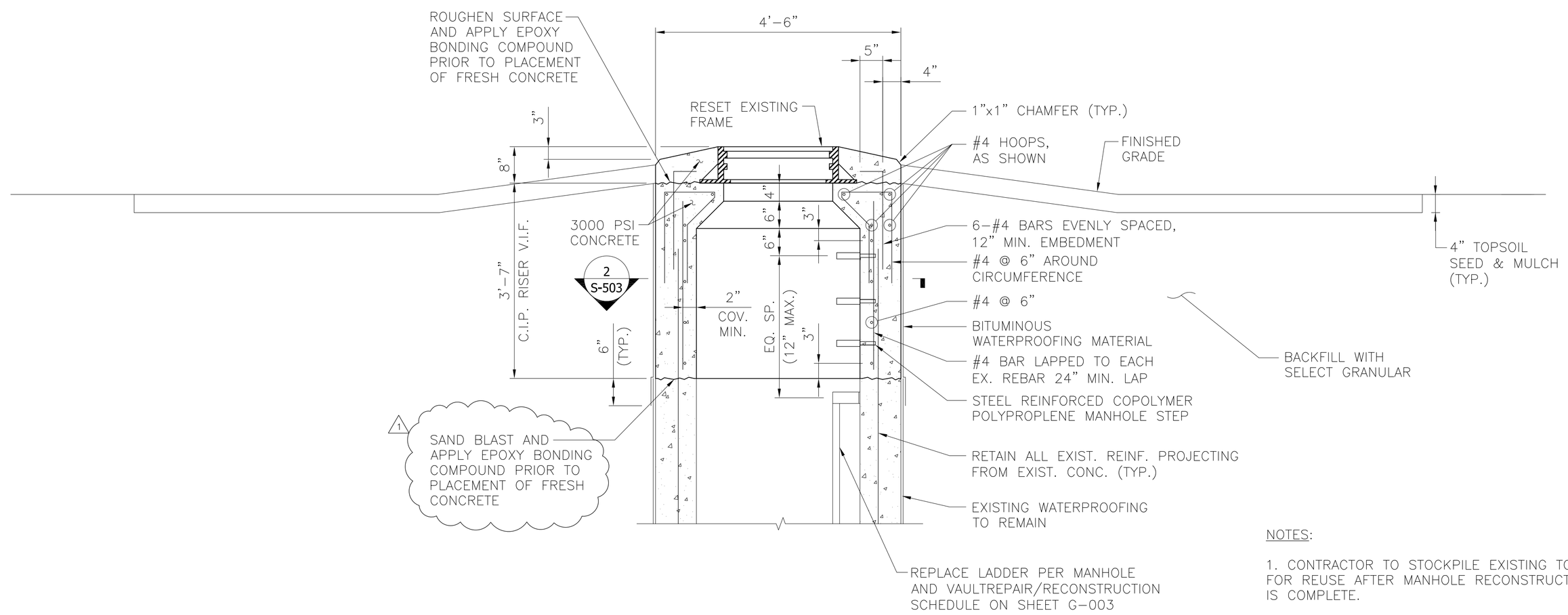

NOTES:

1. CONTRACTOR TO STOCKPILE EXISTING TOPSOIL FOR REUSE AFTER MANHOLE RECONSTRUCTION IS COMPLETE.

1 MANHOLE RISER RECONSTRUCTION DETAIL FOR MH #7 & #15

SCALE: ¾"=1'-0"

NYS OFFICE OF GENERAL SERVICES
Serving New York
ANDREW M. CUOMO
Governor
ROANN M. DESTITO
Commissioner

CONSULTANT

GPI
GREENMAN-PEDERSEN, INC.
CONSULTING ENGINEERS
80 WOLF ROAD, SUITE 300
ALBANY, NY 12205
TEL: (518) 453-9431
FAX: (518) 453-9458
WWW.GPINET.COM

WARNING:
THE ALTERATION OF THIS MATERIAL IN ANY WAY, UNLESS DONE UNDER THE DIRECTION OF A COMPARABLE PROFESSIONAL, I.E. ARCHITECT FOR AN ARCHITECT, ENGINEER FOR AN ENGINEER OR LANDSCAPE ARCHITECT FOR A LANDSCAPE ARCHITECT, IS A VIOLATION OF THE NEW YORK STATE EDUCATION LAW AND/OR REGULATIONS AND IS A CLASS 'A' MISDEMEANOR.

STATE OF NEW YORK · JOHN G. RIZZO · 077511 · LICENSED PROFESSIONAL ENGINEER

CONTRACT:
CONSTRUCTION

TITLE:
REPAIR UNDERGROUND STEAM TUNNELS

LOCATION:
WILLARD DRUG TREATMENT CENTER
7116 COUNTY ROUTE 132
WILLARD, NEW YORK

CLIENT:
DEPARTMENT OF CORRECTIONS AND COMMUNITY SUPERVISION

REVISED DRAWING
2/22/2013

MARK	DATE	DESCRIPTION
1	02/22/2013	ADDENDUM 1
	02/06/2013	BID DOCUMENT

PROJECT NUMBER:	44288-C
DESIGNED BY:	M. BORGEL
DRAWN BY:	F. CUOCCIO
FIELD CHECK:	
APPROVED:	

SHEET TITLE:
MANHOLE DETAILS

DRAWING NUMBER:
S-502

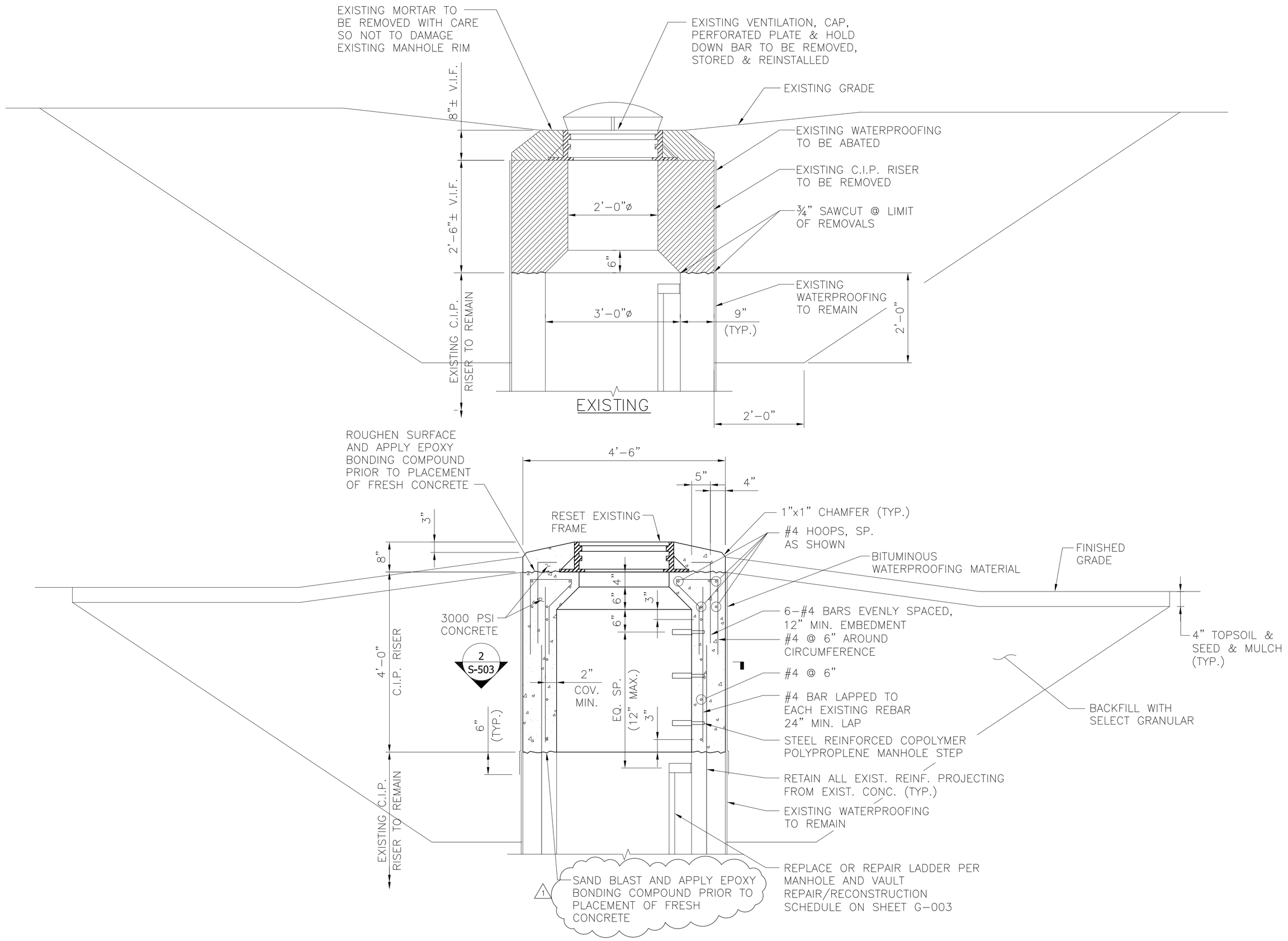

1 MANHOLE RISER RECONSTRUCTION DETAIL FOR MH #18

SCALE: ¾"=1'-0"

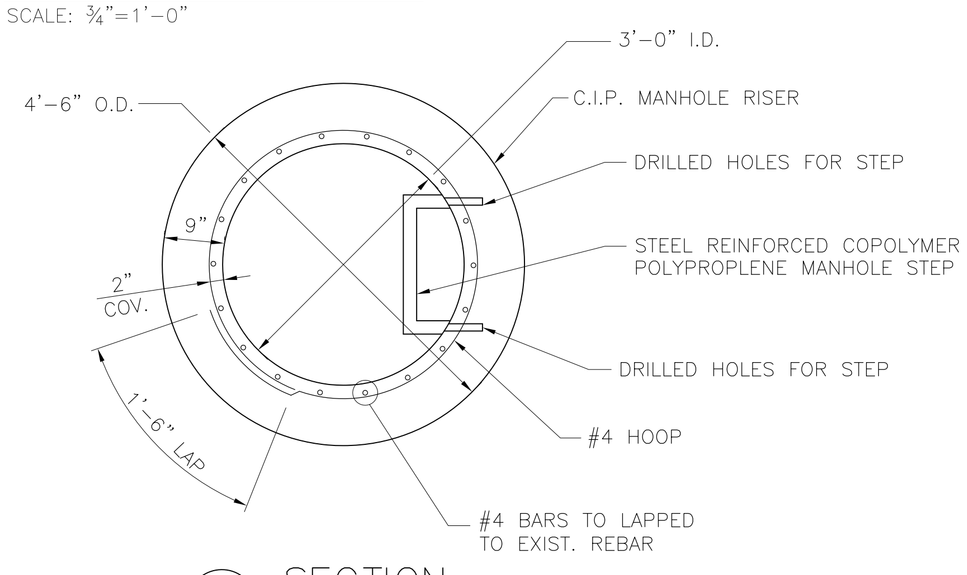

2 SECTION

SCALE: ¾"=1'-0"

NYS OFFICE OF GENERAL SERVICES

Serving New York

ANDREW M. CUOMO
Governor
ROANN M. DESTITO
Commissioner

CONSULTANT

GPI

GREENMAN-PEDERSEN, INC.
CONSULTING ENGINEERS

80 WOLF ROAD, SUITE 300
ALBANY, NY 12205
TEL: (518) 453-9431
FAX: (518) 453-9458
WWW.GPINET.COM

WARNING:
THE ALTERATION OF THIS MATERIAL IN ANY WAY, UNLESS DONE UNDER THE DIRECTION OF A COMPARABLE PROFESSIONAL, I.E. ARCHITECT FOR AN ARCHITECT, ENGINEER FOR AN ENGINEER OR LANDSCAPE ARCHITECT FOR A LANDSCAPE ARCHITECT, IS A VIOLATION OF THE NEW YORK STATE EDUCATION LAW AND/OR REGULATIONS AND IS A CLASS 'A' MISDEMEANOR.

STATE OF NEW YORK · JOHN G. RIZZO · 077511 · LICENSED PROFESSIONAL ENGINEER

CONTRACT:
CONSTRUCTION

TITLE:
REPAIR UNDERGROUND STEAM TUNNELS

LOCATION:
WILLARD DRUG TREATMENT CENTER
7116 COUNTY ROUTE 132
WILLARD, NEW YORK

CLIENT:
DEPARTMENT OF CORRECTIONS AND COMMUNITY SUPERVISION

REVISED DRAWING
2/22/2013

MARK	DATE	DESCRIPTION
1	02/22/2013	ADDENDUM 1
	02/06/2013	BID DOCUMENT

PROJECT NUMBER:	44288-C
DESIGNED BY:	M. BORGEL
DRAWN BY:	F. CUOCCIO
FIELD CHECK:	
APPROVED:	

SHEET TITLE:
MANHOLE DETAILS

DRAWING NUMBER:
S-503

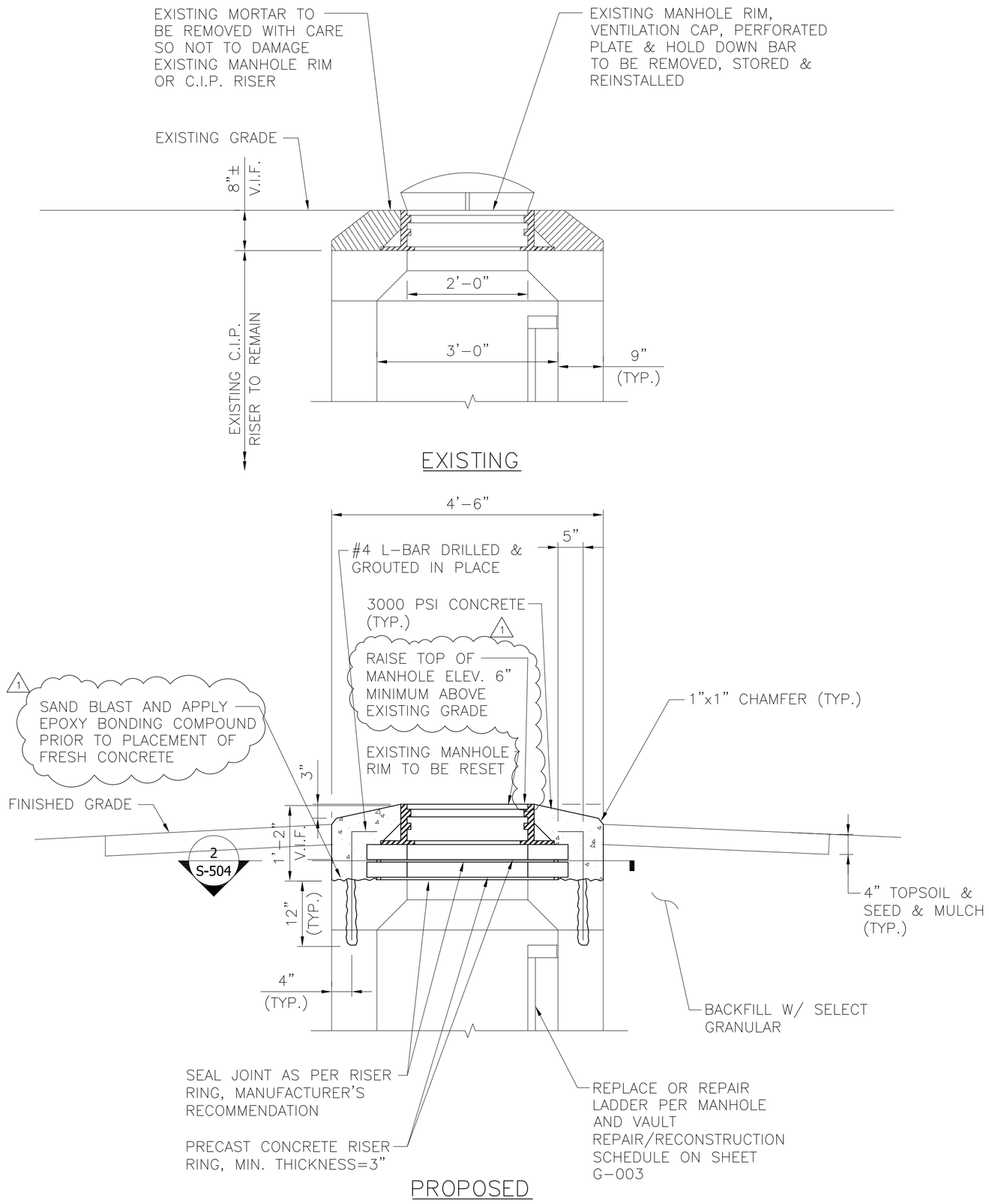

1 MANHOLE RISER RECONSTRUCTION DETAIL FOR MH #8, #9 & #26

SCALE: ¾"=1'-0"

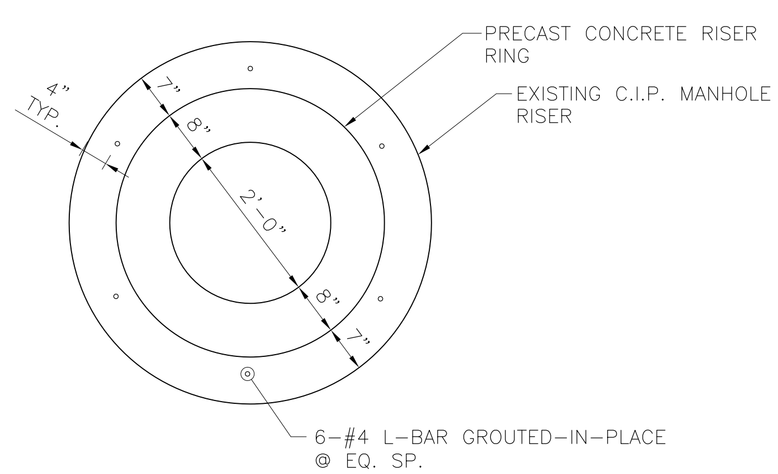

2 SECTION

SCALE: ¾"=1'-0"

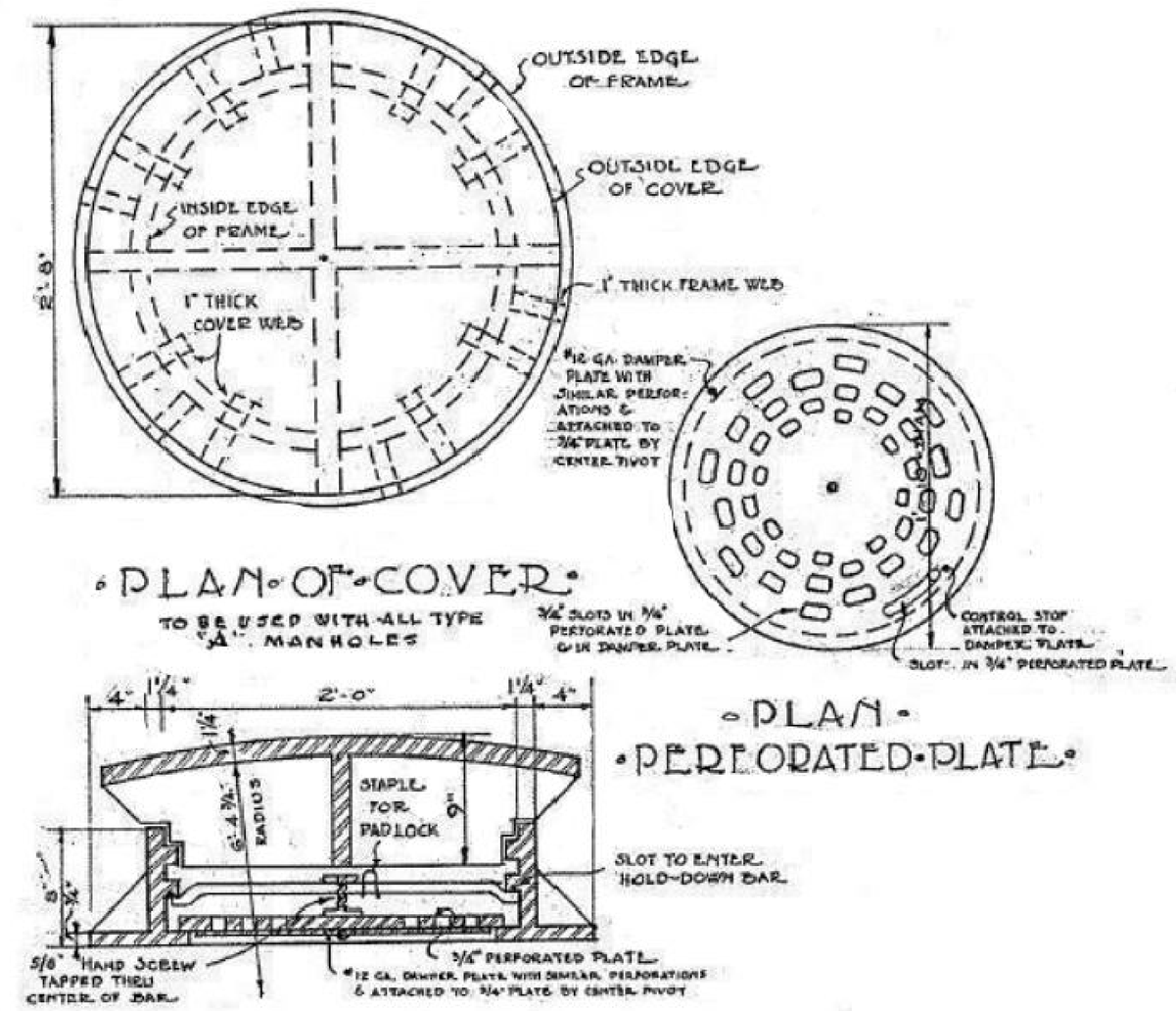

1 3 VENTILATION CAP AND PERFORATED PLATE DETAIL

(ABOVE PLAN AND DETAILS TAKEN FROM EXISTING TUNNEL PLAN FOR ORIGINAL CONSTRUCTION. CONTRACTOR TO FIELD VERIFY PRIOR TO FABRICATION)
SCALE: NONE

NYS OFFICE OF GENERAL SERVICES
Serving New York
ANDREW M. CUOMO
Governor
ROANN M. DESTITO
Commissioner

CONSULTANT

GPI
GREENMAN-PEDERSEN, INC.
CONSULTING ENGINEERS
80 WOLF ROAD, SUITE 300
ALBANY, NY 12205
TEL: (518) 453-9431
FAX: (518) 453-9458
WWW.GPINET.COM

WARNING:
THE ALTERATION OF THIS MATERIAL IN ANY WAY, UNLESS DONE UNDER THE DIRECTION OF A COMPARABLE PROFESSIONAL, I.E. ARCHITECT FOR AN ARCHITECT, ENGINEER FOR AN ENGINEER OR LANDSCAPE ARCHITECT FOR A LANDSCAPE ARCHITECT, IS A VIOLATION OF THE NEW YORK STATE EDUCATION LAW AND/OR REGULATIONS AND IS A CLASS "A" MISDEMEANOR.

STATE OF NEW YORK · JOHN G. RIZZO · 077511 · LICENSED PROFESSIONAL ENGINEER

CONTRACT:
CONSTRUCTION

TITLE:
REPAIR UNDERGROUND STEAM TUNNELS

LOCATION:
WILLARD DRUG TREATMENT CENTER
7116 COUNTY ROUTE 132
WILLARD, NEW YORK

CLIENT:
DEPARTMENT OF CORRECTIONS AND COMMUNITY SUPERVISION

REVISED DRAWING
2/22/2013

MARK	DATE	DESCRIPTION
1	02/22/2013	ADDENDUM 1
	02/06/2013	BID DOCUMENT

PROJECT NUMBER:	44288-C
DESIGNED BY:	M. BORGEL
DRAWN BY:	F. CUOCCIO
FIELD CHECK:	
APPROVED:	

SHEET TITLE:
MANHOLE DETAILS & SECTIONS

DRAWING NUMBER:
S-504

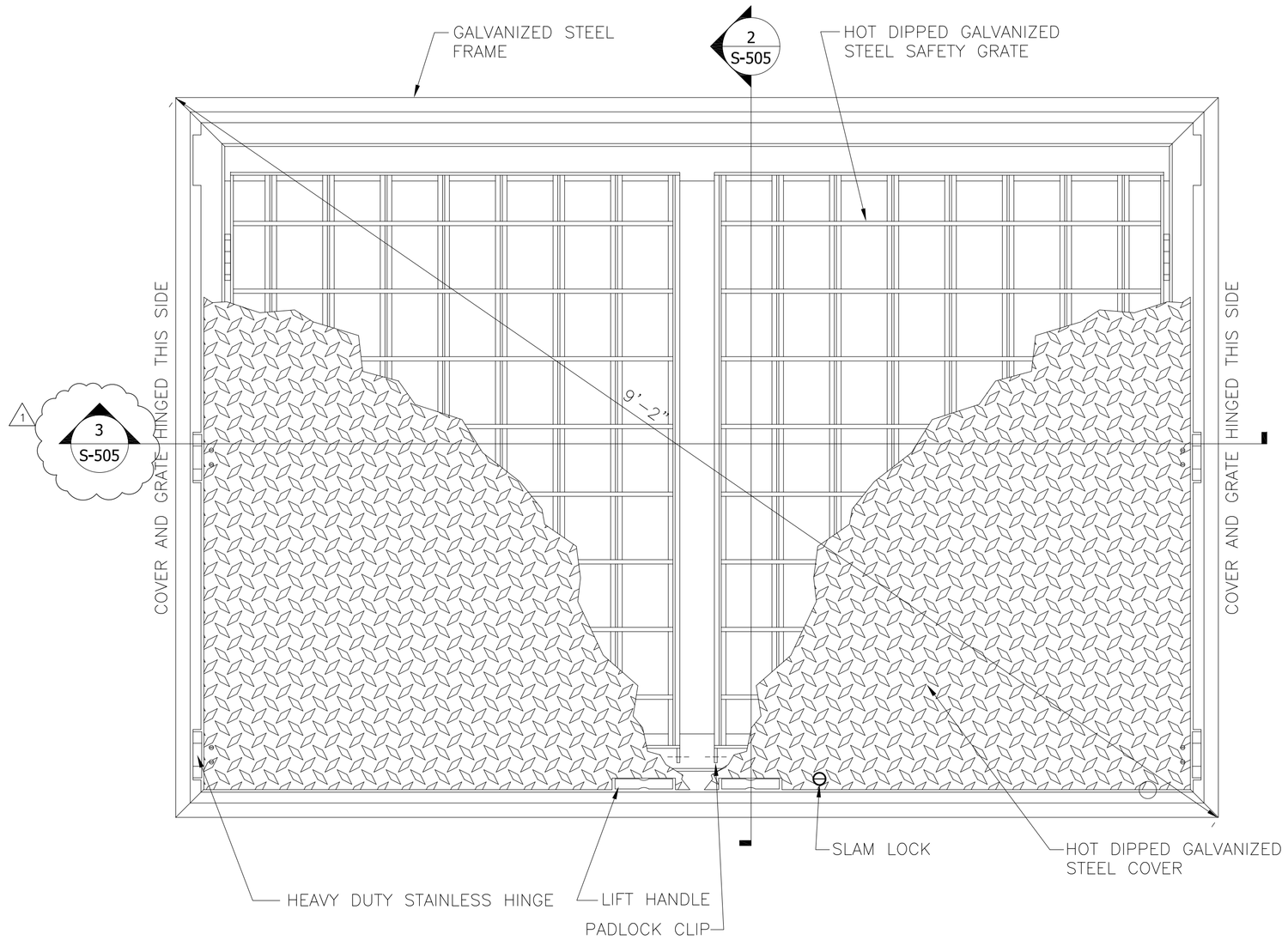

1 HATCH PLAN
SCALE: NONE

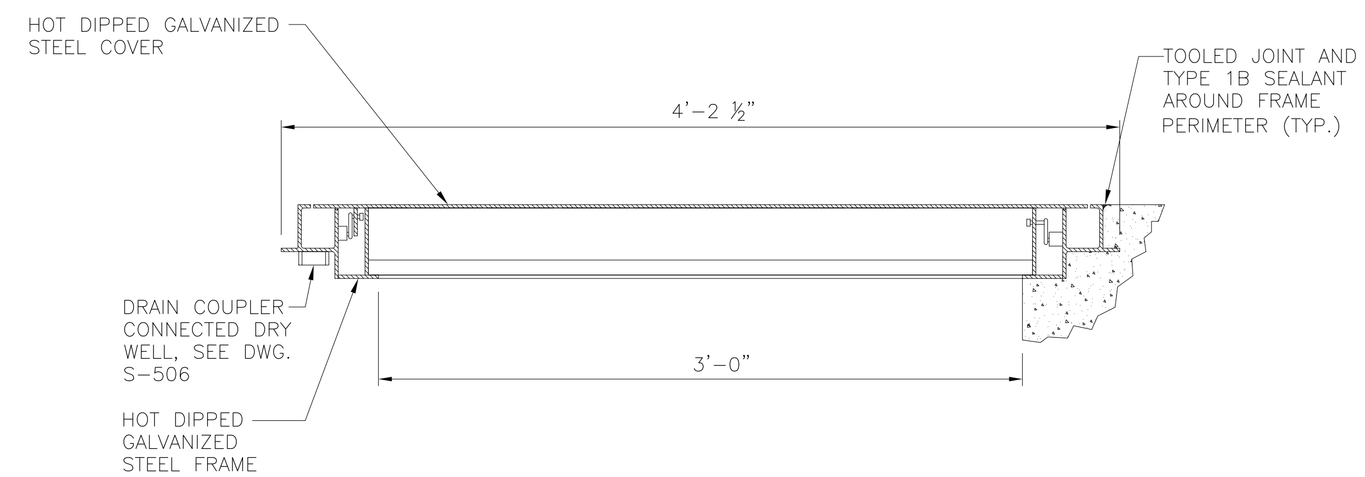

2 SECTION
SCALE: NONE

NOTE:

1. SEE SPECIFICATION 83100 ACCESS DOORS FOR MORE INFORMATION.

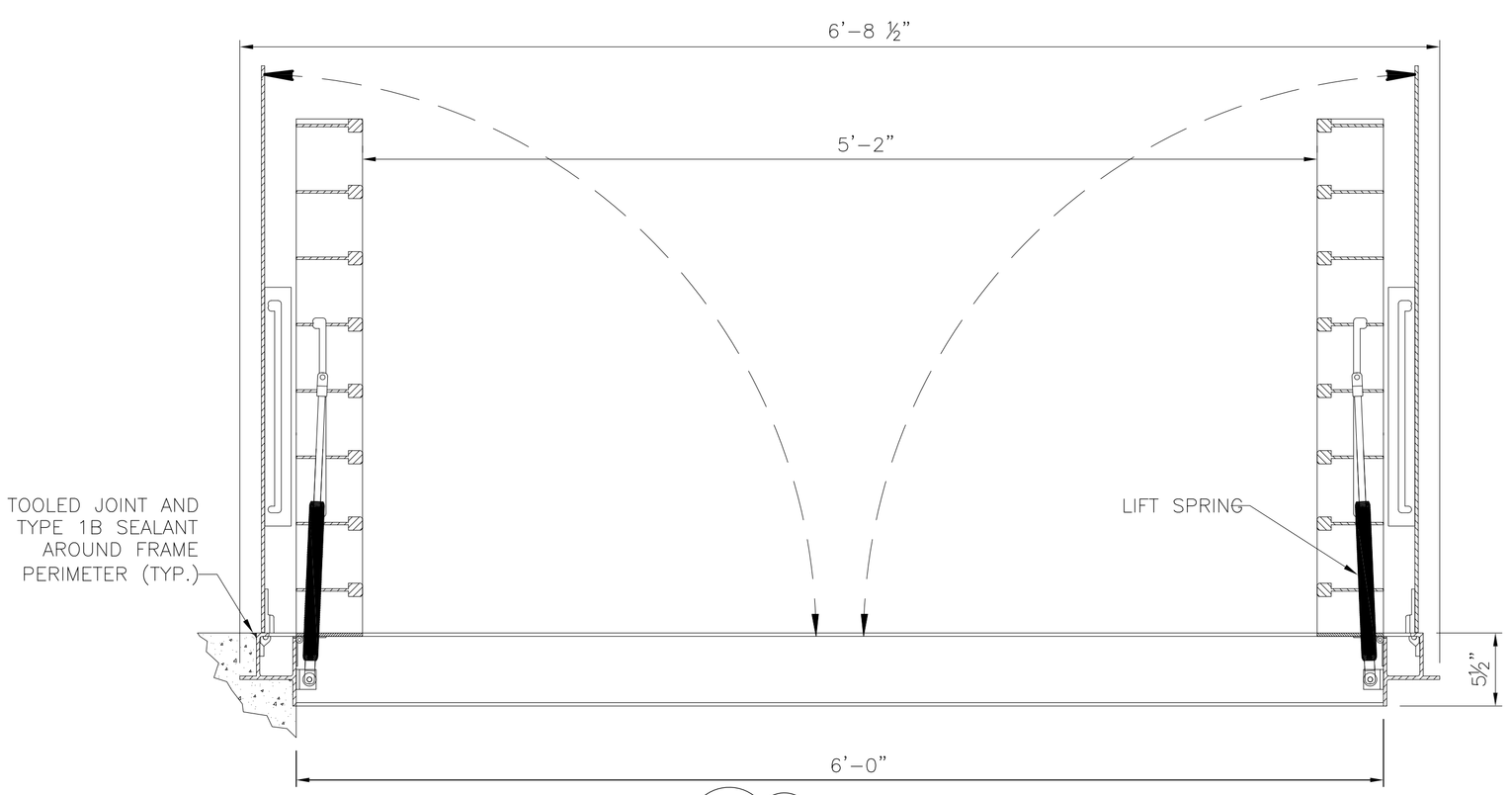

3 SECTION
SCALE: NONE

NYS OFFICE OF GENERAL SERVICES
Serving New York

ANDREW M. CUOMO
Governor
ROANN M. DESTITO
Commissioner

CONSULTANT

GPI
GREENMAN-PEDERSEN, INC.
CONSULTING ENGINEERS
80 WOLF ROAD, SUITE 300
ALBANY, NY 12205
TEL: (518) 453-9431
FAX: (518) 453-9458
WWW.GPINET.COM

WARNING:
THE ALTERATION OF THIS MATERIAL IN ANY WAY, UNLESS DONE UNDER THE DIRECTION OF A COMPARABLE PROFESSIONAL, I.E. ARCHITECT FOR AN ARCHITECT, ENGINEER FOR AN ENGINEER OR LANDSCAPE ARCHITECT FOR A LANDSCAPE ARCHITECT, IS A VIOLATION OF THE NEW YORK STATE EDUCATION LAW AND/OR REGULATIONS AND IS A CLASS 'A' MISDEMEANOR.

STATE OF NEW YORK · JOHN G. RIZZO · 077511 · LICENSED PROFESSIONAL ENGINEER

CONTRACT:
CONSTRUCTION

TITLE:
REPAIR UNDERGROUND STEAM TUNNELS

LOCATION:
WILLARD DRUG TREATMENT CENTER
7116 COUNTY ROUTE 132
WILLARD, NEW YORK

CLIENT:
DEPARTMENT OF CORRECTIONS AND COMMUNITY SUPERVISION

REVISED DRAWING
2/22/2013

MARK	DATE	DESCRIPTION
1	02/22/2013	ADDENDUM 1
	02/06/2013	BID DOCUMENT

PROJECT NUMBER:	44288-C
DESIGNED BY:	M. BORGEL
DRAWN BY:	F. CUOCCIO
FIELD CHECK:	
APPROVED:	

SHEET TITLE:
ACCESS HATCH PLAN AND SECTION

DRAWING NUMBER:
S-505

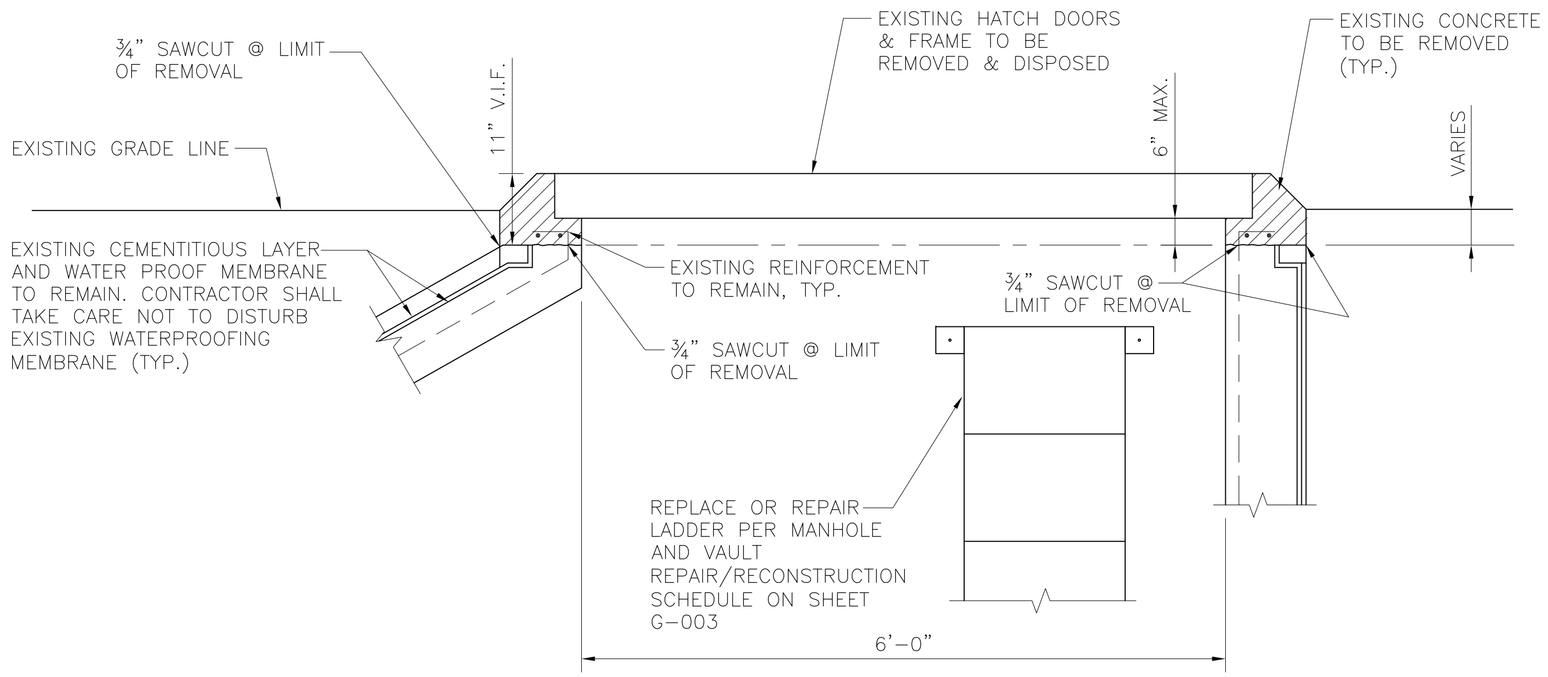

1 VAULT HATCH REMOVAL DETAIL
SCALE: 1"=1'-0"

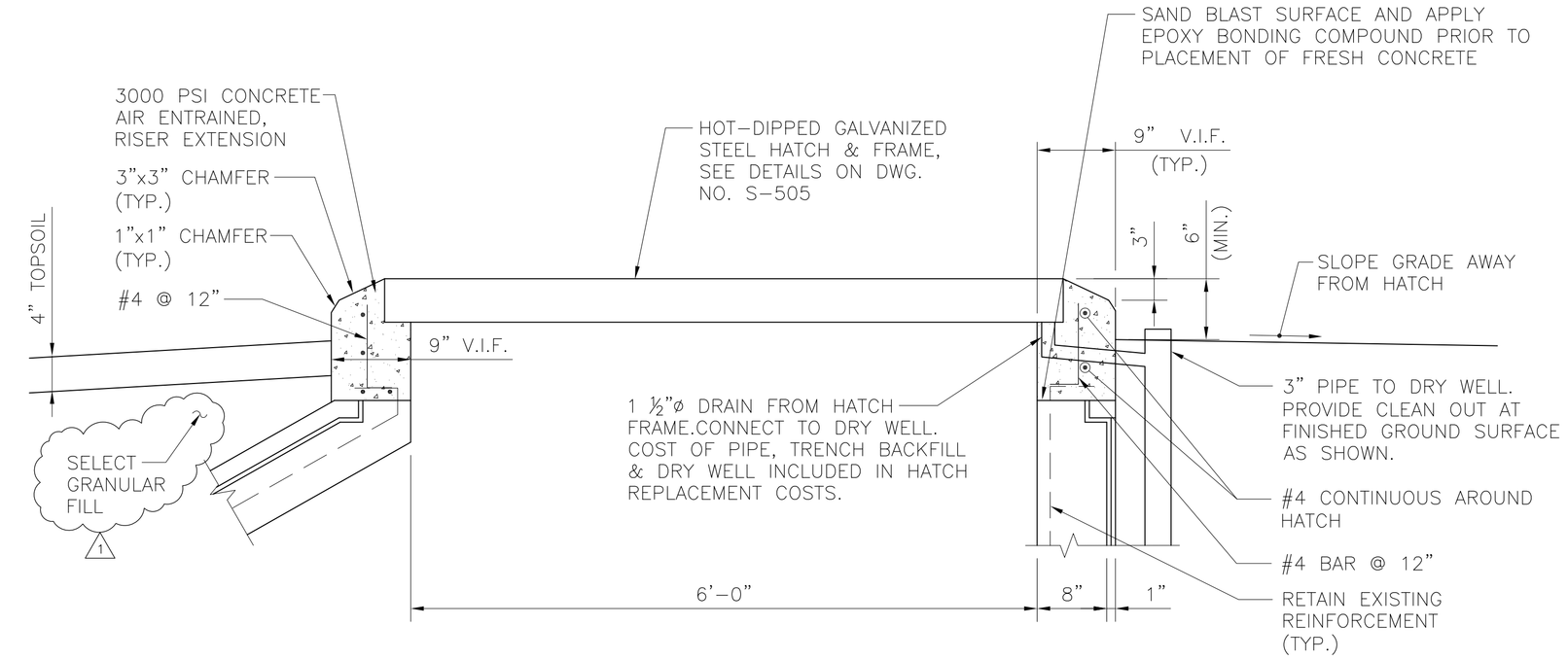

2 VAULT HATCH RECONSTRUCTION DETAIL
SCALE: 1"=1'-0"

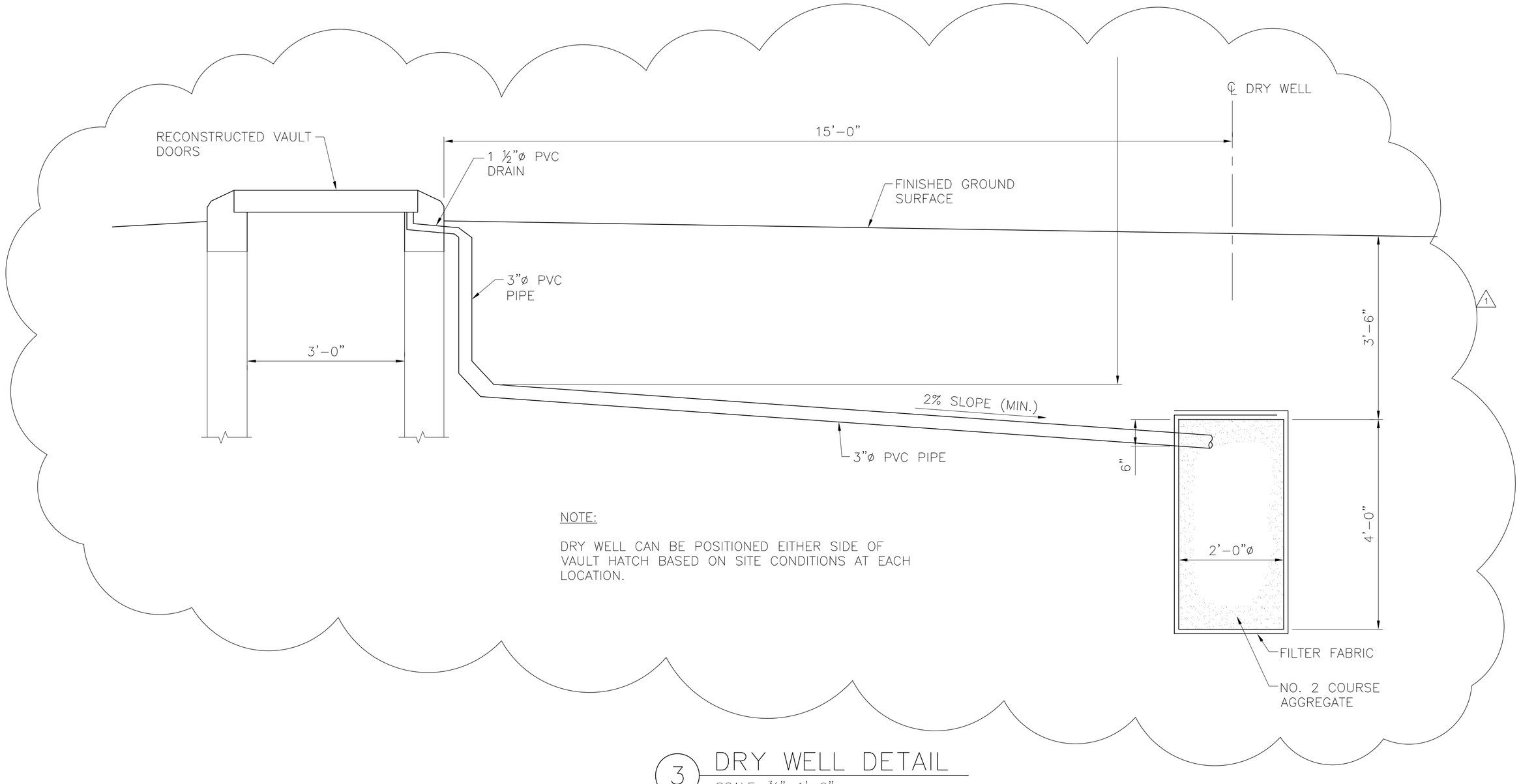

NOTE:

DRY WELL CAN BE POSITIONED EITHER SIDE OF VAULT HATCH BASED ON SITE CONDITIONS AT EACH LOCATION.

3 DRY WELL DETAIL
SCALE: ¾"=1'-0"

NYS OFFICE OF GENERAL SERVICES
Serving New York
ANDREW M. CUOMO
Governor
ROANN M. DESTITO
Commissioner

CONSULTANT

GPI
GREENMAN-PEDERSEN, INC.
CONSULTING ENGINEERS
80 WOLF ROAD, SUITE 300
ALBANY, NY 12205
TEL: (518) 453-9431
FAX: (518) 453-9458
WWW.GPINET.COM

WARNING:
THE ALTERATION OF THIS MATERIAL IN ANY WAY, UNLESS DONE UNDER THE DIRECTION OF A COMPARABLE PROFESSIONAL, I.E. ARCHITECT FOR AN ARCHITECT, ENGINEER FOR AN ENGINEER OR LANDSCAPE ARCHITECT FOR A LANDSCAPE ARCHITECT, IS A VIOLATION OF THE NEW YORK STATE EDUCATION LAW AND/OR REGULATIONS AND IS A CLASS 'A' MISDEMEANOR.

STATE OF NEW YORK · JOHN G. RIZZO · 077511 · LICENSED PROFESSIONAL ENGINEER

CONTRACT:
CONSTRUCTION

TITLE:
REPAIR UNDERGROUND STEAM TUNNELS

LOCATION:
WILLARD DRUG TREATMENT CENTER
7116 COUNTY ROUTE 132
WILLARD, NEW YORK

CLIENT:
DEPARTMENT OF CORRECTIONS AND COMMUNITY SUPERVISION

REVISED DRAWING
2/22/2013

MARK	DATE	DESCRIPTION
1	02/22/2013	ADDENDUM 1
	02/06/2013	BID DOCUMENT

PROJECT NUMBER:	44288-C
DESIGNED BY:	M. BORGEL
DRAWN BY:	F. CUOCCIO
FIELD CHECK:	
APPROVED:	

SHEET TITLE:
TUNNEL A
VAULT HATCH
REMOVAL & RECONSTRUCTION

DRAWING NUMBER:
S-506

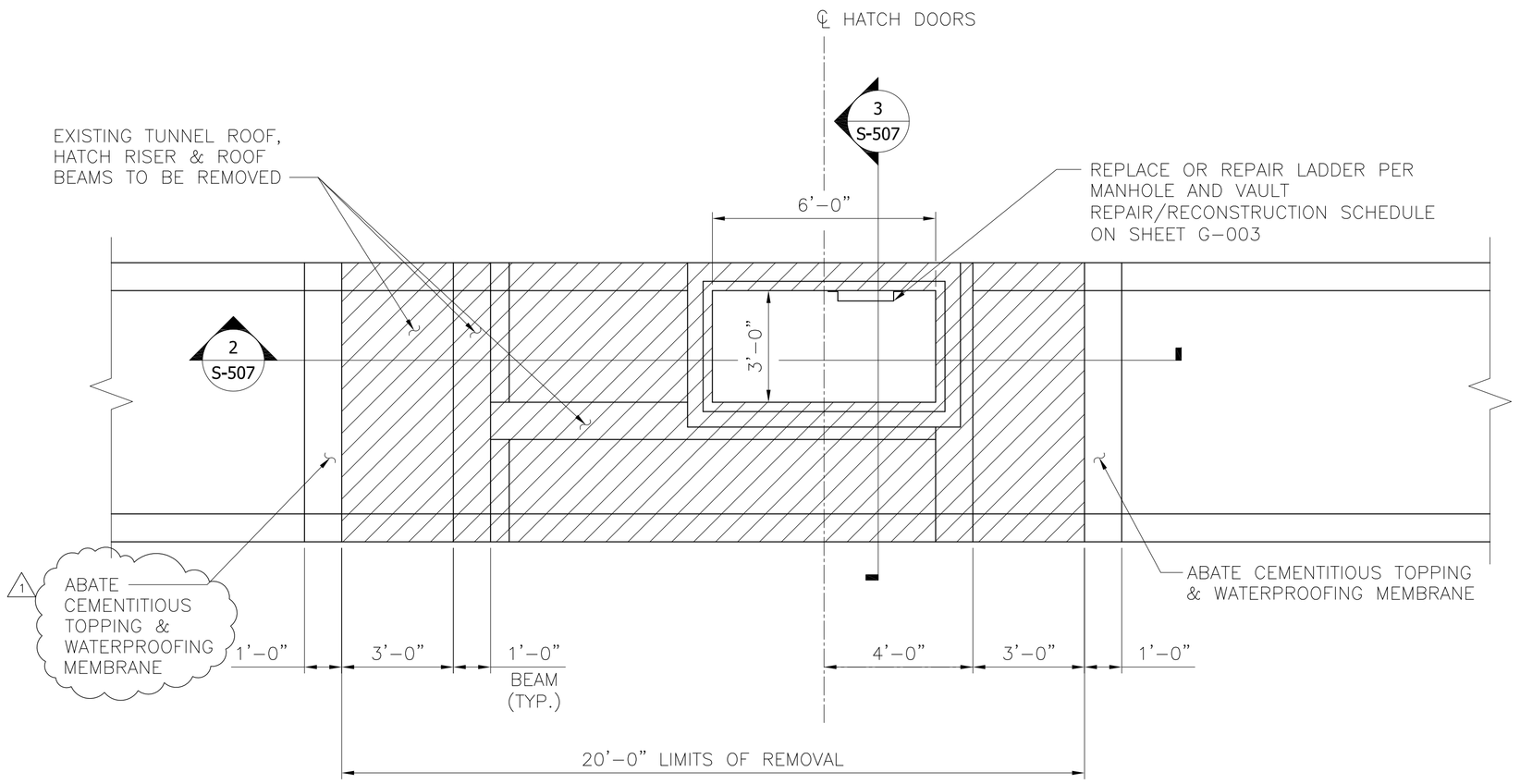

1 VAULT MH #22 AND 23 REMOVAL PLAN
SCALE: 3/8"=1'-0"

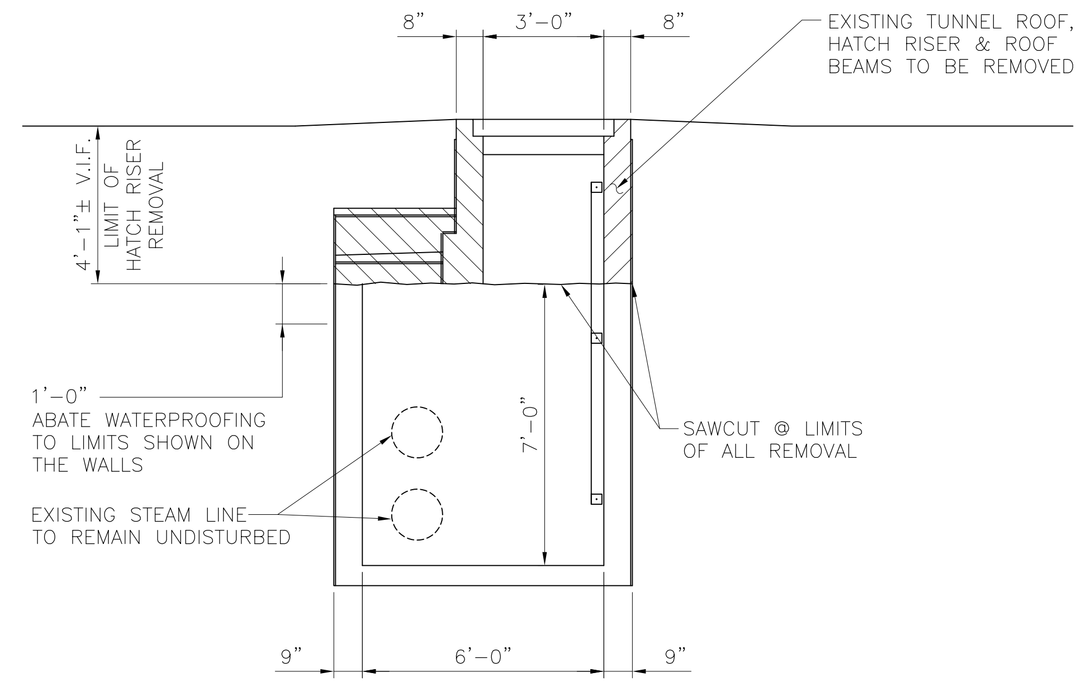

3 SECTION
SCALE: 3/8"=1'-0"

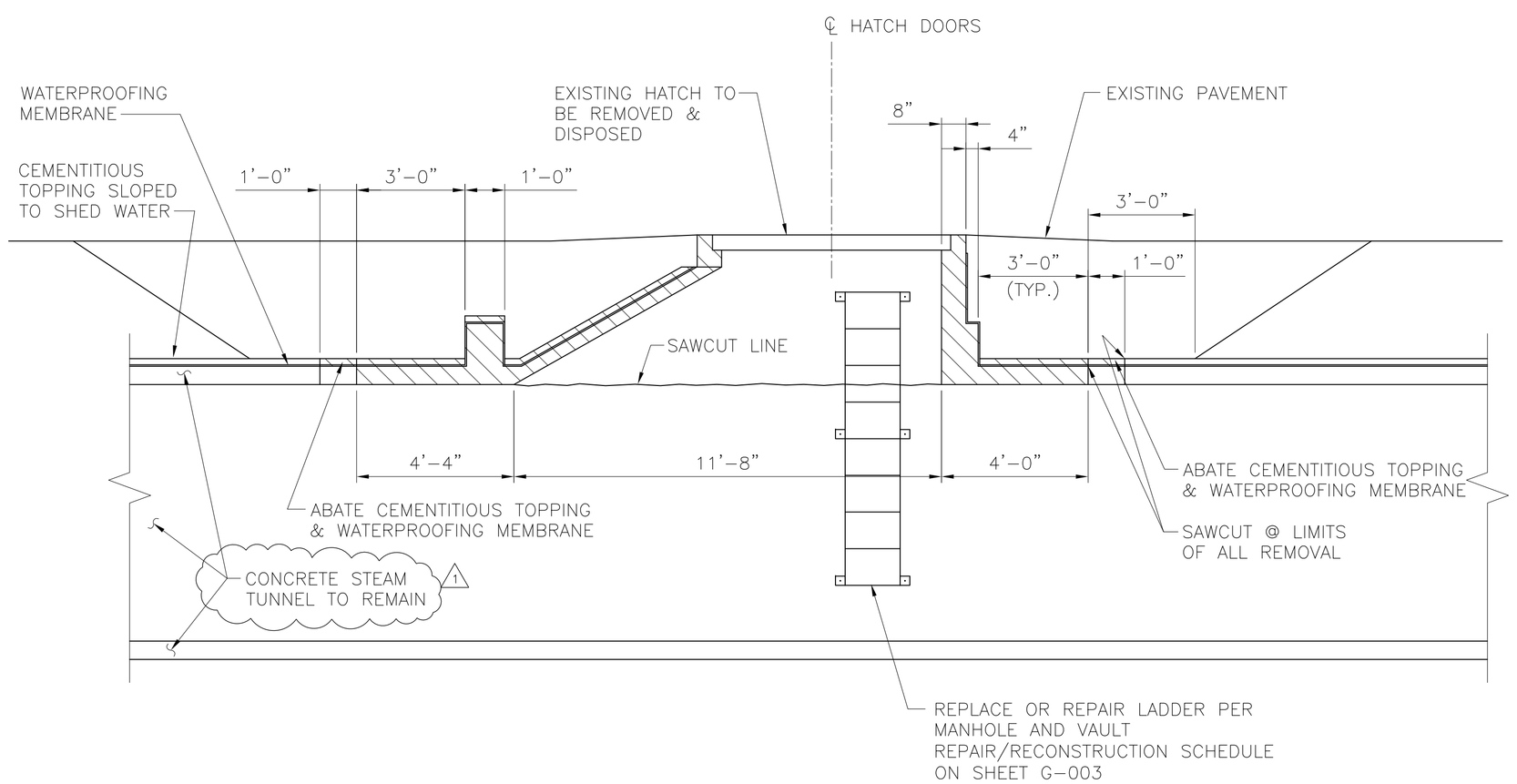

2 SECTION
SCALE: 3/8"=1'-0"

NOTE:
CONTRACTOR TO PROVIDE TEMPORARY SHORING DURING HATCH RECONSTRUCTION

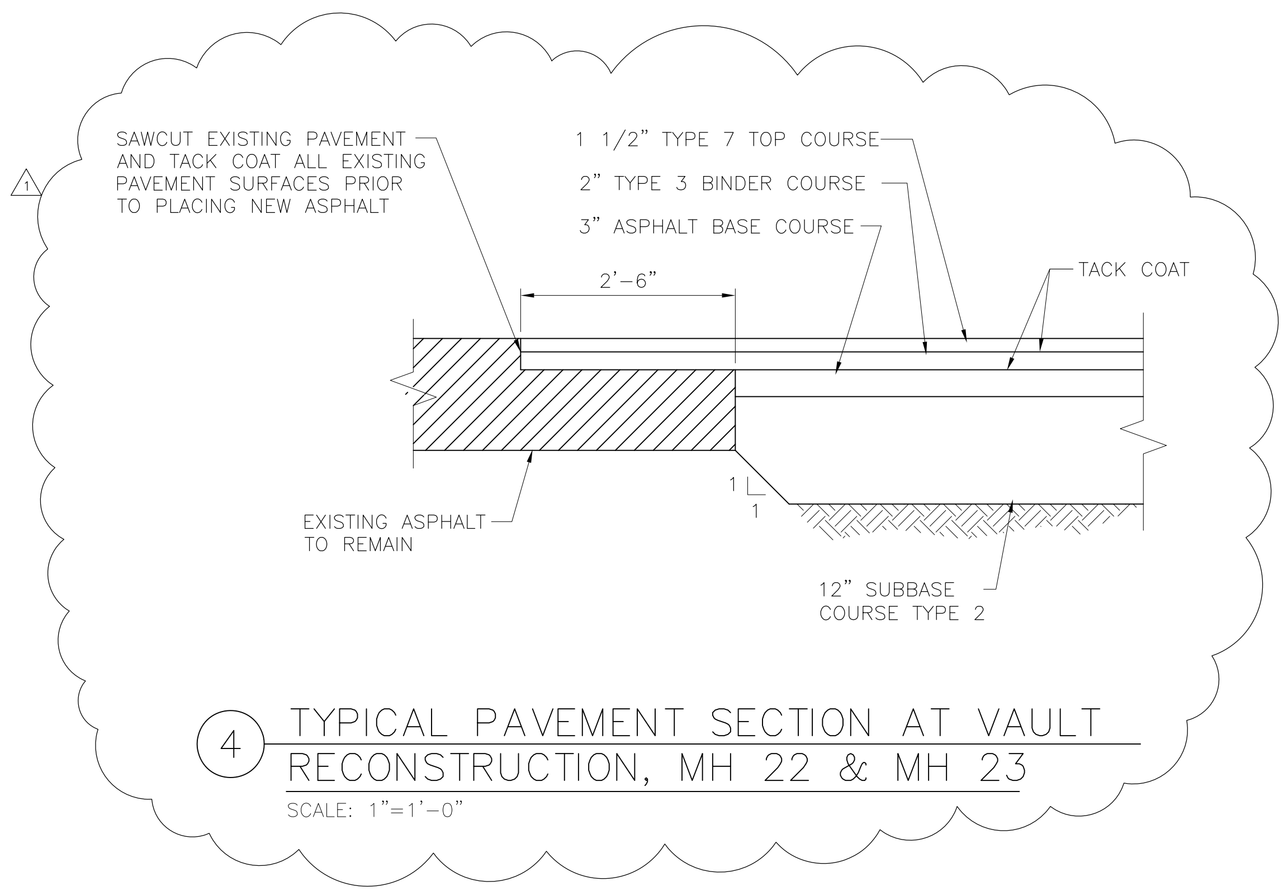

4 TYPICAL PAVEMENT SECTION AT VAULT RECONSTRUCTION, MH 22 & MH 23
SCALE: 1"=1'-0"

NYS OFFICE OF GENERAL SERVICES
Serving New York
ANDREW M. CUOMO
Governor
ROANN M. DESTITO
Commissioner

CONSULTANT

GPI
GREENMAN-PEDERSEN, INC.
CONSULTING ENGINEERS
80 WOLF ROAD, SUITE 300
ALBANY, NY 12205
TEL: (518) 453-9431
FAX: (518) 453-9458
WWW.GPINET.COM

WARNING:
THE ALTERATION OF THIS MATERIAL IN ANY WAY, UNLESS DONE UNDER THE DIRECTION OF A COMPARABLE PROFESSIONAL, I.E. ARCHITECT FOR AN ARCHITECT, ENGINEER FOR AN ENGINEER OR LANDSCAPE ARCHITECT FOR A LANDSCAPE ARCHITECT, IS A VIOLATION OF THE NEW YORK STATE EDUCATION LAW AND/OR REGULATIONS AND IS A CLASS 'A' MISDEMEANOR.

STATE OF NEW YORK · JOHN G. RIZZO · 077511 · LICENSED PROFESSIONAL ENGINEER

CONTRACT:
CONSTRUCTION

TITLE:
REPAIR UNDERGROUND STEAM TUNNELS

LOCATION:
WILLARD DRUG TREATMENT CENTER
7116 COUNTY ROUTE 132
WILLARD, NEW YORK

CLIENT:
DEPARTMENT OF CORRECTIONS AND COMMUNITY SUPERVISION

REVISED DRAWING
2/22/2013

MARK	DATE	DESCRIPTION
1	02/22/2013	ADDENDUM 1
	02/06/2013	BID DOCUMENT

PROJECT NUMBER:	44288-C
DESIGNED BY:	M. BORGEL
DRAWN BY:	F. CUOCCIO
FIELD CHECK:	
APPROVED:	

SHEET TITLE:
TUNNEL A
VAULT RISER REMOVAL
PLAN & SECTIONS

DRAWING NUMBER:
S-507

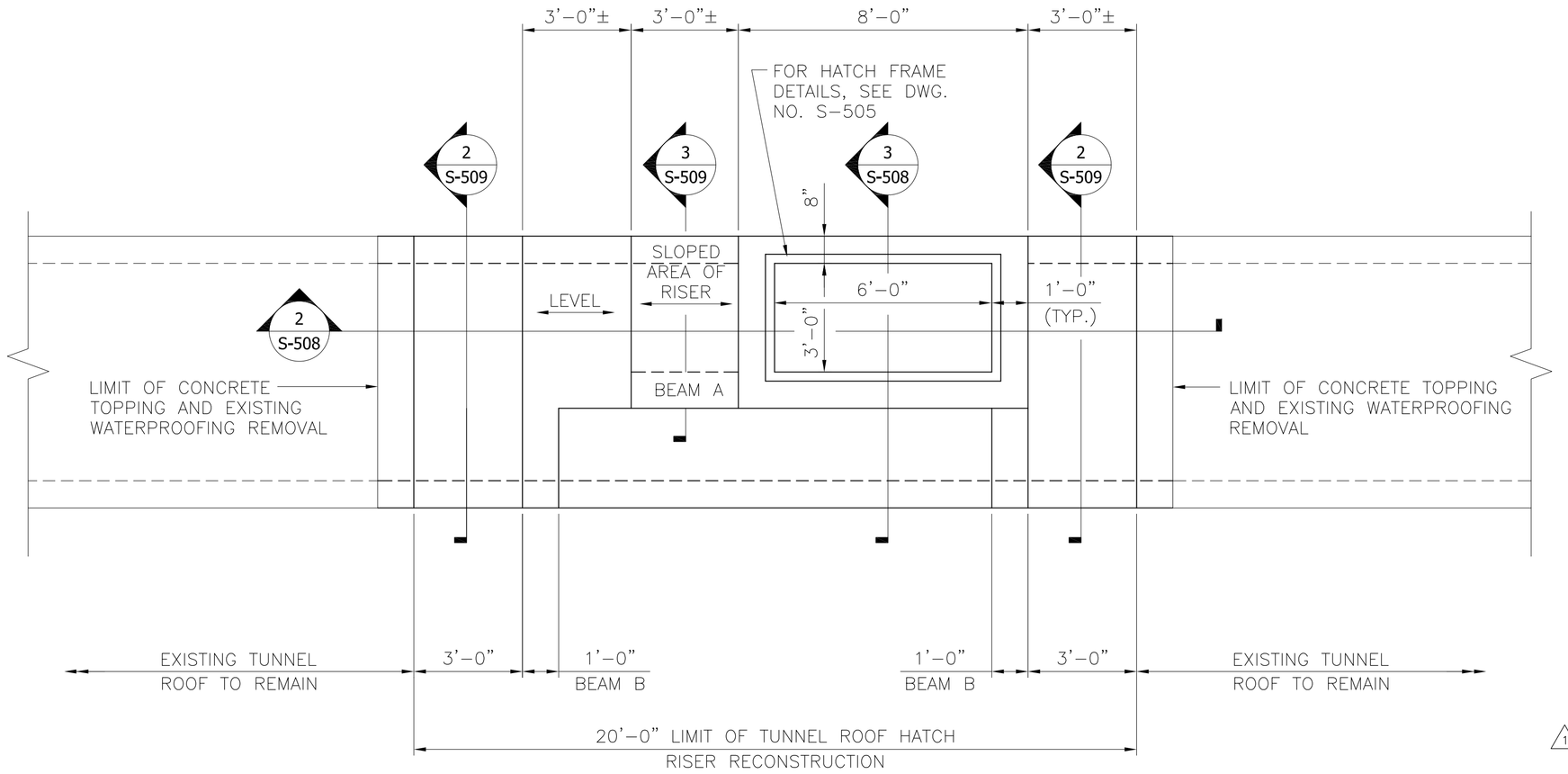

1 VAULT MH #22 & MH#23 RECONSTRUCTION PLAN

SCALE: ⅜"=1'-0"

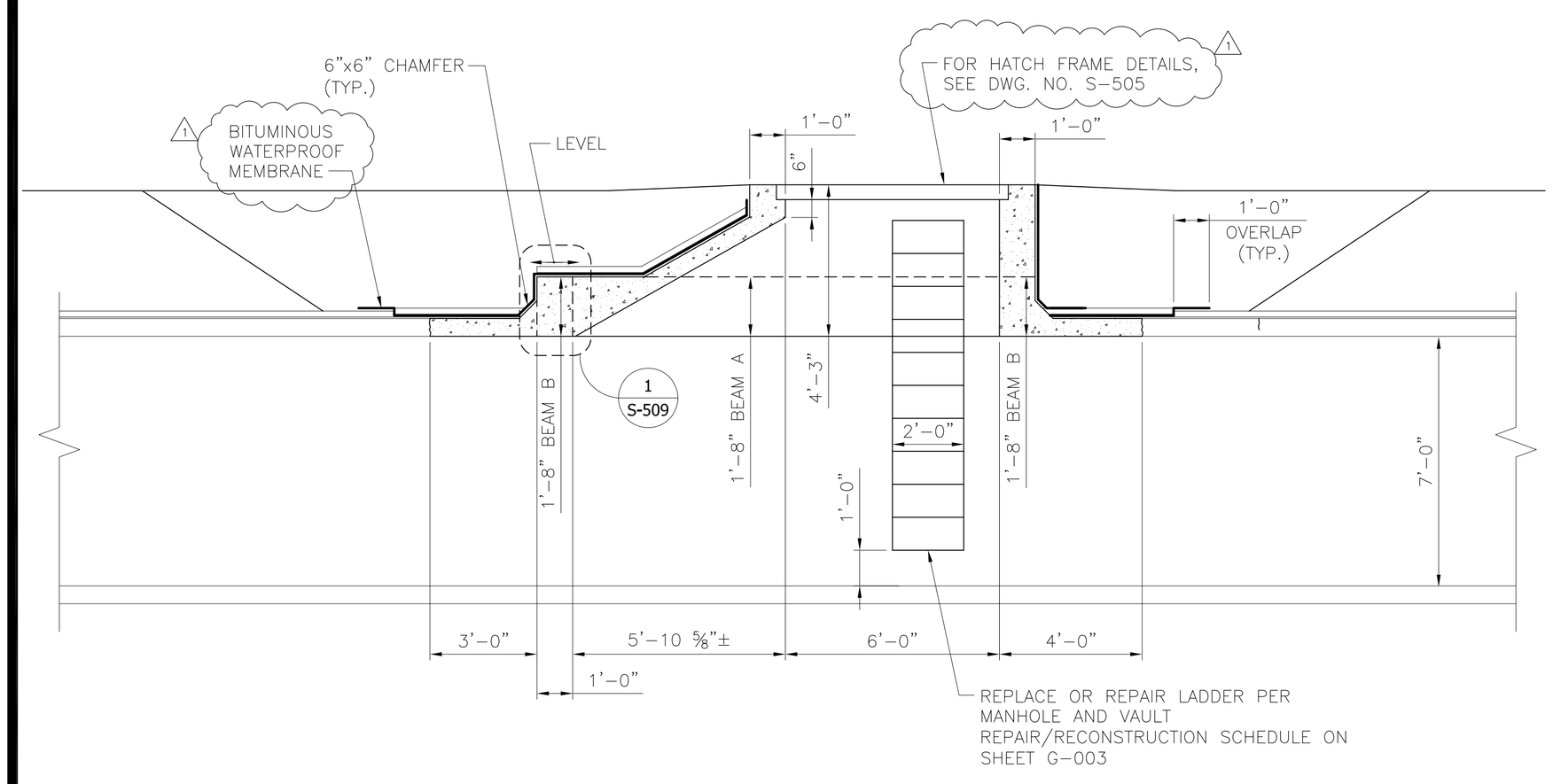

2 SECTION

SCALE: ⅜"=1'-0"

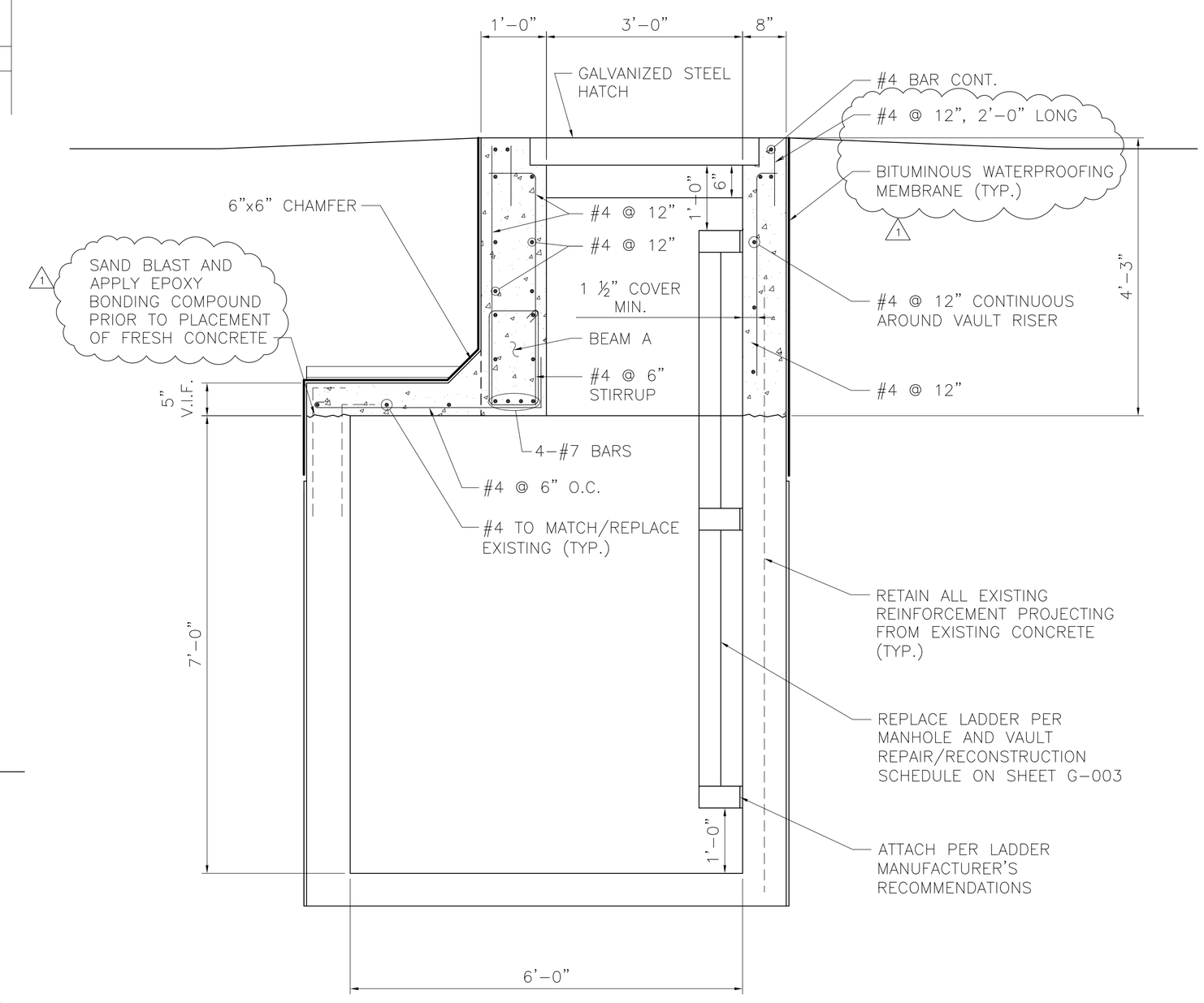

3 SECTION

SCALE: ¾"=1'-0"

NYS OFFICE OF GENERAL SERVICES

Serving New York

ANDREW M. CUOMO
Governor
ROANN M. DESTITO
Commissioner

CONSULTANT

GPI

GREENMAN-PEDERSEN, INC.
CONSULTING ENGINEERS

80 WOLF ROAD, SUITE 300
ALBANY, NY 12205
TEL: (518) 453-9431
FAX: (518) 453-9458
WWW.GPINET.COM

WARNING:

THE ALTERATION OF THIS MATERIAL IN ANY WAY, UNLESS DONE UNDER THE DIRECTION OF A COMPARABLE PROFESSIONAL, I.E. ARCHITECT FOR AN ARCHITECT, ENGINEER FOR AN ENGINEER OR LANDSCAPE ARCHITECT FOR A LANDSCAPE ARCHITECT, IS A VIOLATION OF THE NEW YORK STATE EDUCATION LAW AND/OR REGULATIONS AND IS A CLASS 'A' MISDEMEANOR.

STATE OF NEW YORK · JOHN G. RIZZO · 077511 · LICENSED PROFESSIONAL ENGINEER

CONTRACT:
CONSTRUCTION

TITLE:
REPAIR UNDERGROUND STEAM TUNNELS

LOCATION:
WILLARD DRUG TREATMENT CENTER
7116 COUNTY ROUTE 132
WILLARD, NEW YORK

CLIENT:
DEPARTMENT OF CORRECTIONS AND COMMUNITY SUPERVISION

REVISED DRAWING
2/22/2013

MARK	DATE	DESCRIPTION
1	02/22/2013	ADDENDUM 1
	02/06/2013	BID DOCUMENT

PROJECT NUMBER:	44288-C
DESIGNED BY:	M. BORGEL
DRAWN BY:	F. CUOCCIO
FIELD CHECK:	
APPROVED:	

SHEET TITLE:
TUNNEL A
VAULT RECONSTRUCTION
PLAN & SECTIONS

DRAWING NUMBER:
S-508

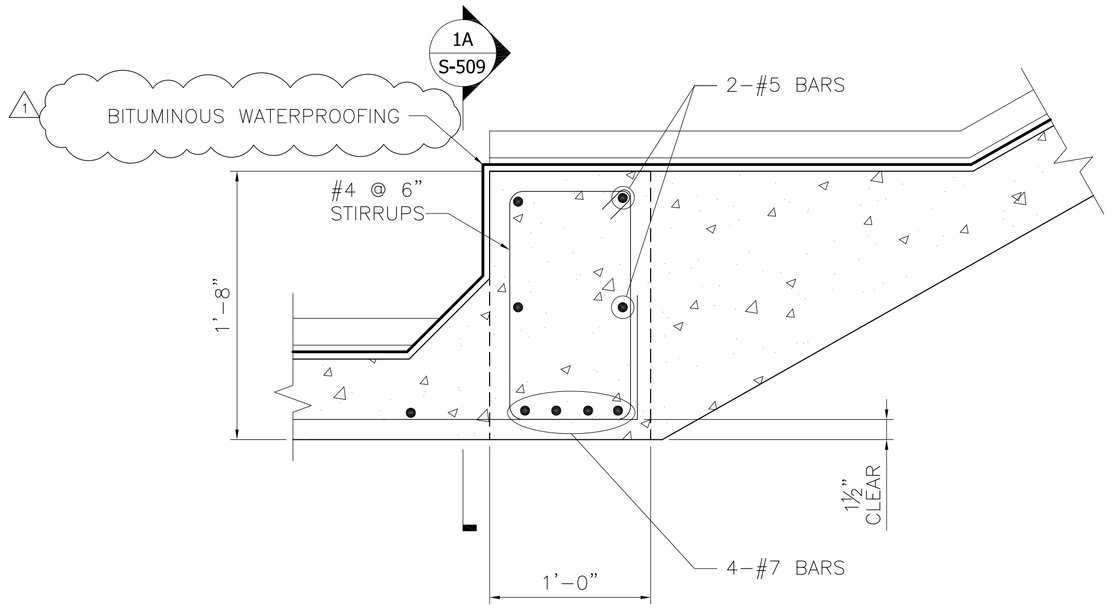

1 SECTION
SCALE: 1 ½"=1'-0"

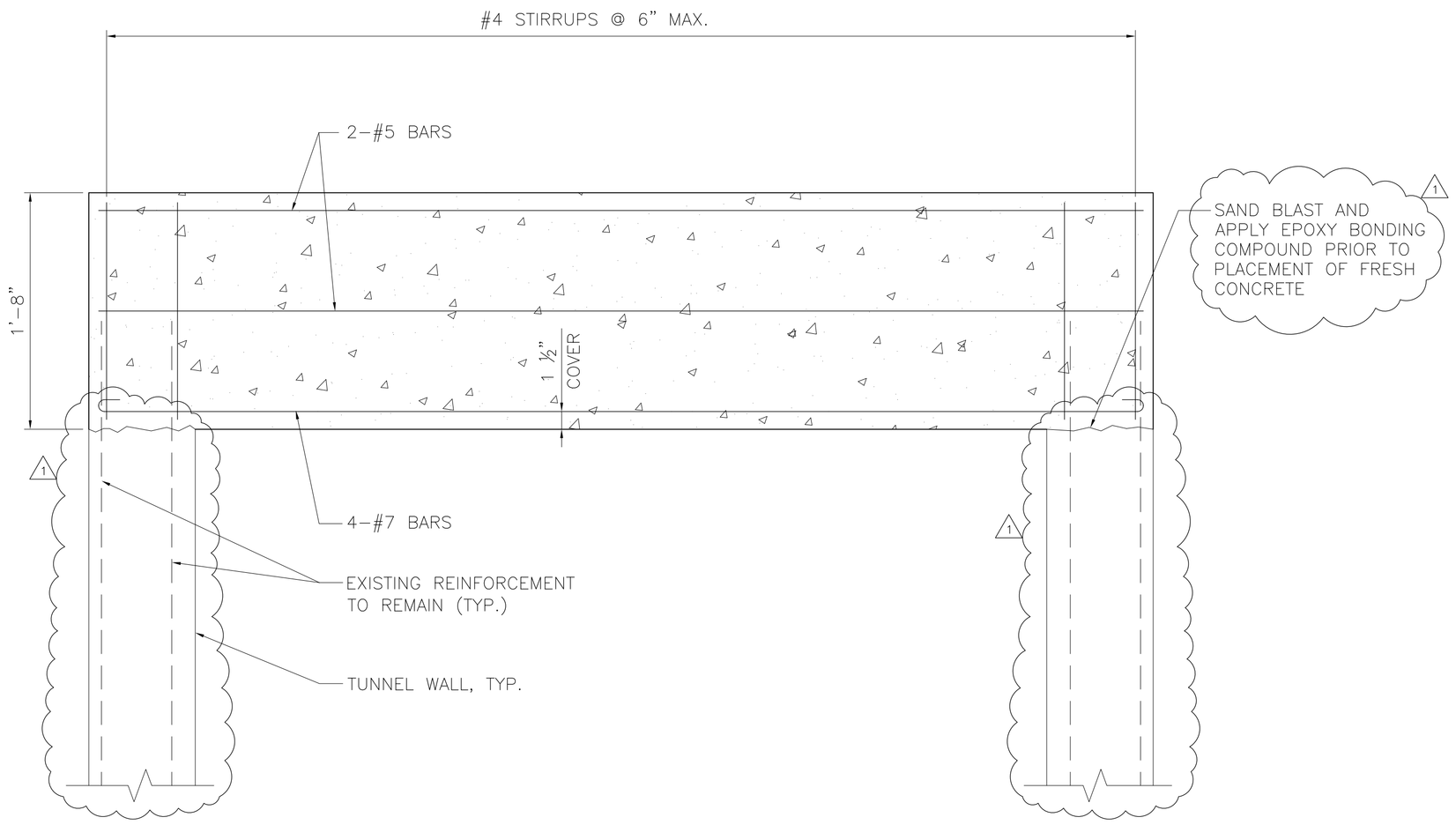

1A ELEVATION
SCALE: 1 ½"=1'-0"

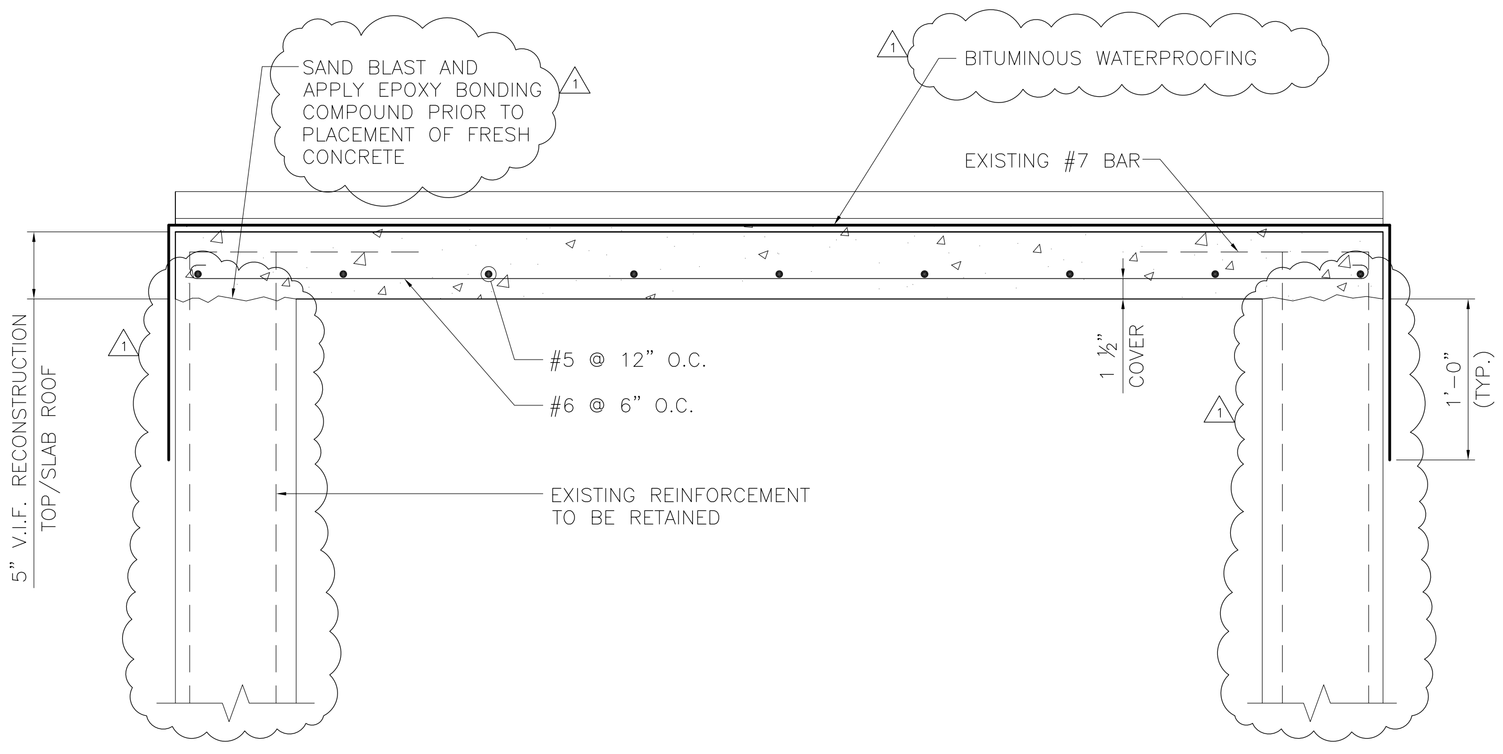

2 SECTION
SCALE: 1 ½"=1'-0"

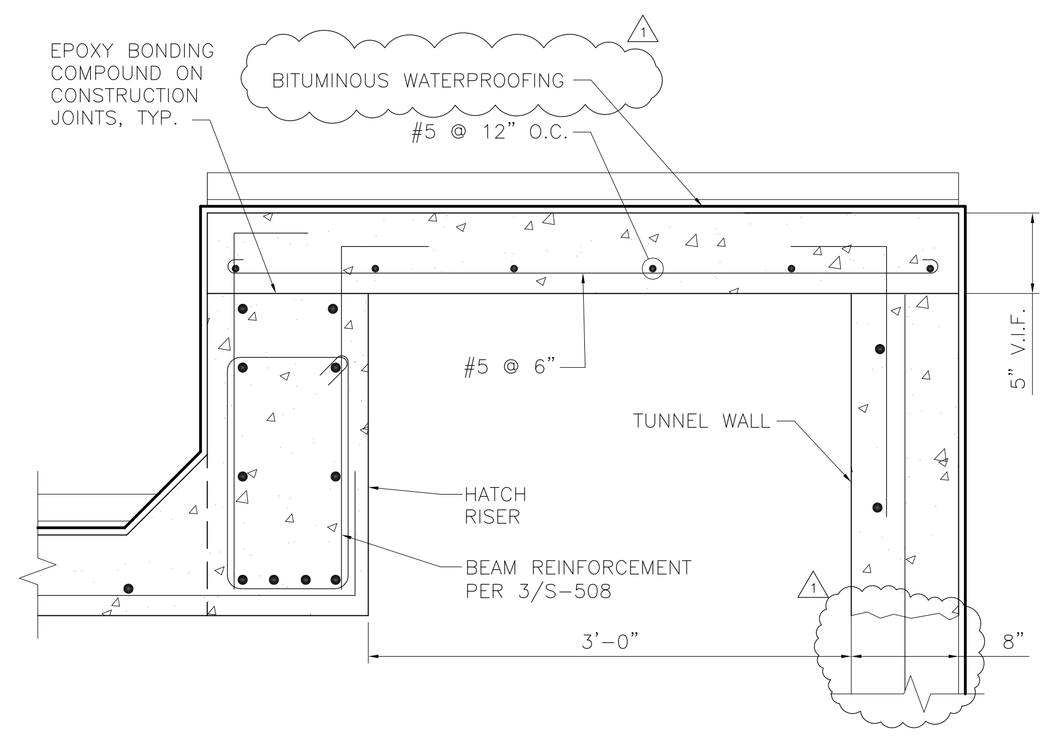

3 SECTION
SCALE: 1 ½"=1'-0"

NYS OFFICE OF GENERAL SERVICES
Serving New York
ANDREW M. CUOMO
Governor
ROANN M. DESTITO
Commissioner

CONSULTANT

GPI
GREENMAN-PEDERSEN, INC.
CONSULTING ENGINEERS
80 WOLF ROAD, SUITE 300
ALBANY, NY 12205
TEL: (518) 453-9431
FAX: (518) 453-9458
WWW.GPINET.COM

WARNING:
THE ALTERATION OF THIS MATERIAL IN ANY WAY, UNLESS DONE UNDER THE DIRECTION OF A COMPARABLE PROFESSIONAL, I.E. ARCHITECT FOR AN ARCHITECT, ENGINEER FOR AN ENGINEER OR LANDSCAPE ARCHITECT FOR A LANDSCAPE ARCHITECT, IS A VIOLATION OF THE NEW YORK STATE EDUCATION LAW AND/OR REGULATIONS AND IS A CLASS 'A' MISDEMEANOR.

STATE OF NEW YORK · JOHN G. RIZZO · 077511 · LICENSED PROFESSIONAL ENGINEER

CONTRACT:
CONSTRUCTION

TITLE:
REPAIR UNDERGROUND
STEAM TUNNELS

LOCATION:
WILLARD DRUG TREATMENT CENTER
7116 COUNTY ROUTE 132
WILLARD, NEW YORK

CLIENT:
DEPARTMENT OF CORRECTIONS
AND COMMUNITY SUPERVISION

REVISED DRAWING
2/22/2013

MARK	DATE	DESCRIPTION
1	02/22/2013	ADDENDUM 1
	02/06/2013	BID DOCUMENT

PROJECT NUMBER:	44288-C
DESIGNED BY:	M. BORGEL
DRAWN BY:	F. CUOCCIO
FIELD CHECK:	
APPROVED:	

SHEET TITLE:
TUNNEL A
VAULT RECONSTRUCTION
DETAILS & SECTIONS

DRAWING NUMBER:
S-509

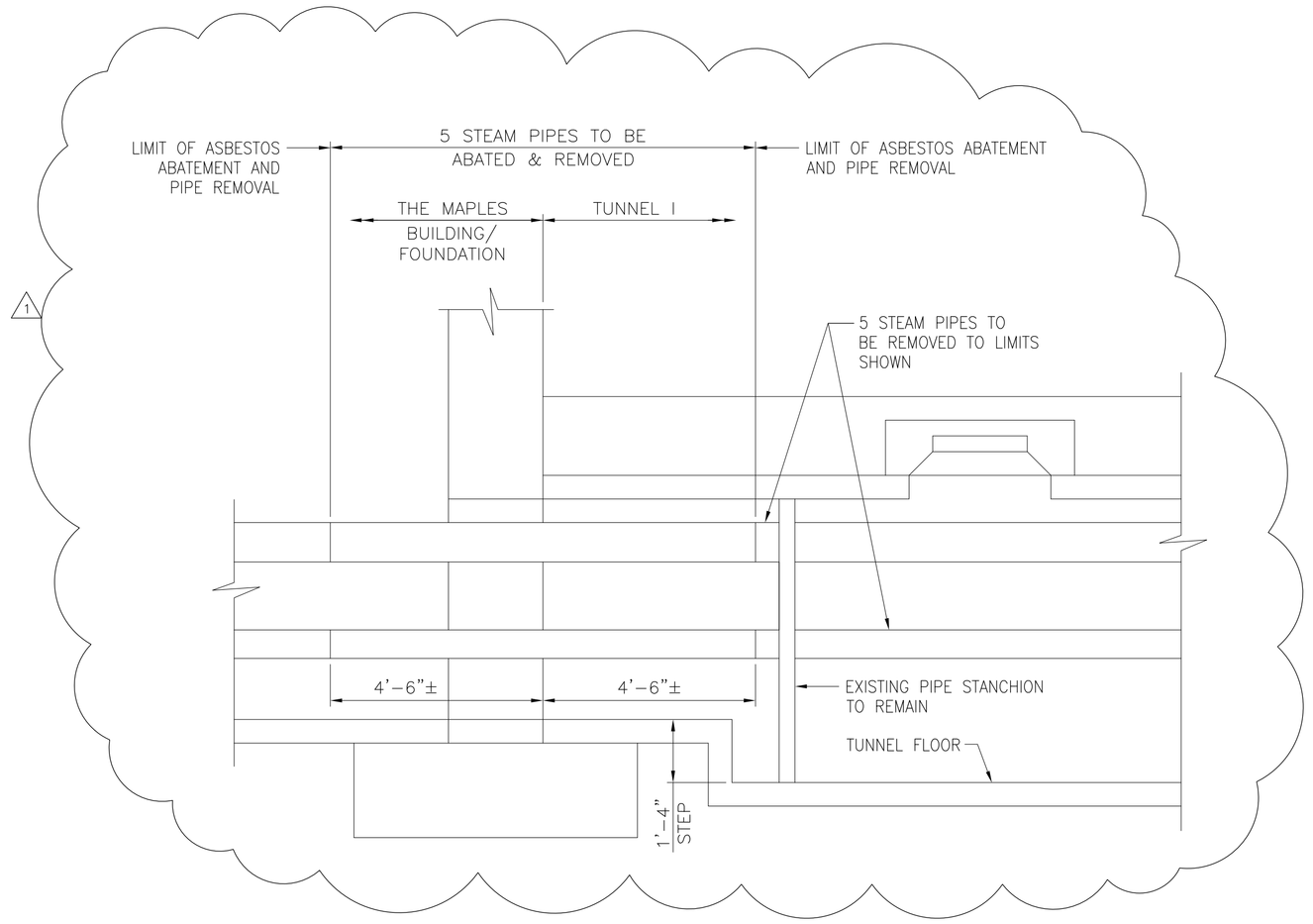

1 THE MAPLES BUILDING/TUNNEL I – EXISTING
SCALE: ½"=1'-0"

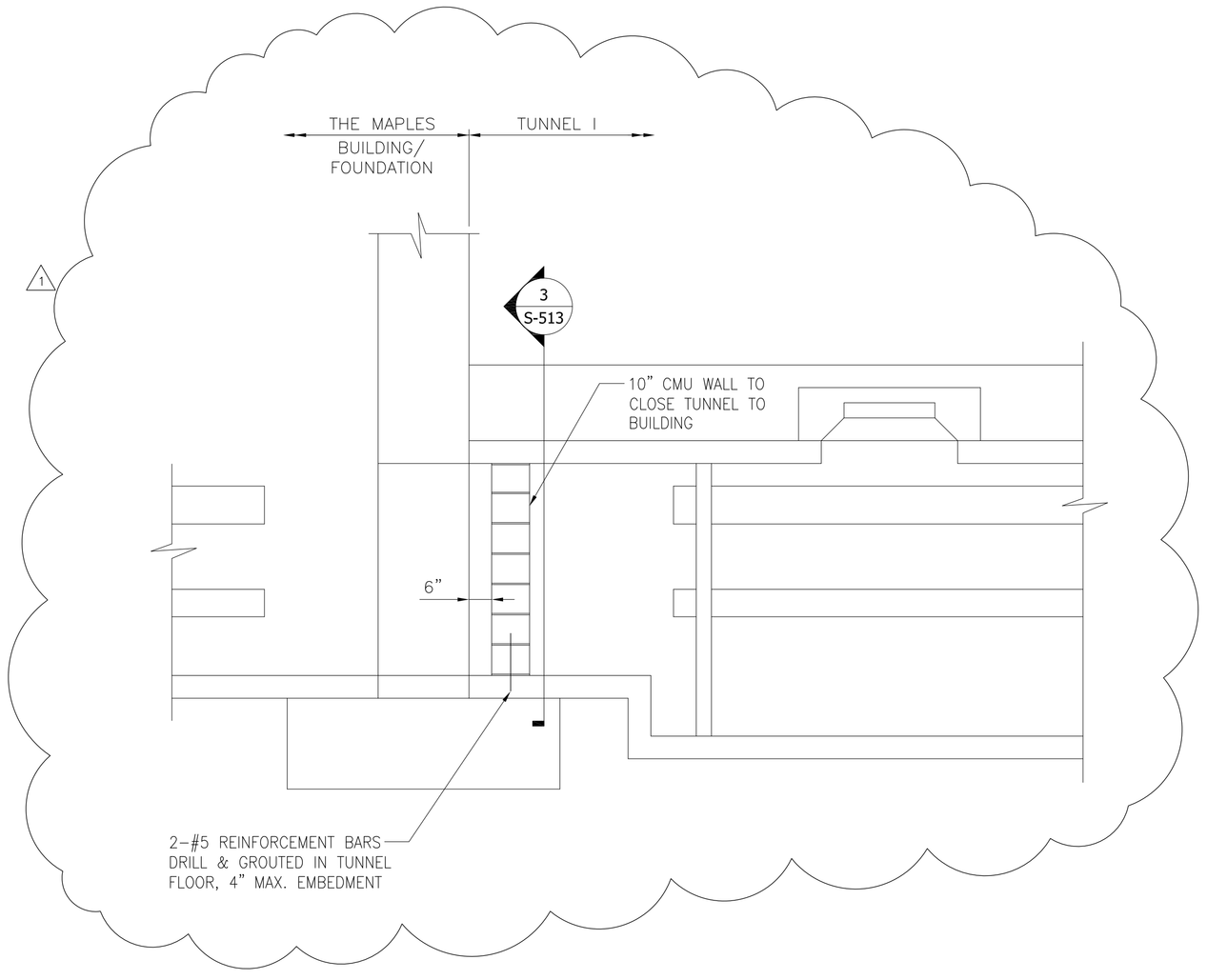

2 THE MAPLES BUILDING/TUNNEL I – TUNNEL CLOSURE
SCALE: ½"=1'-0"

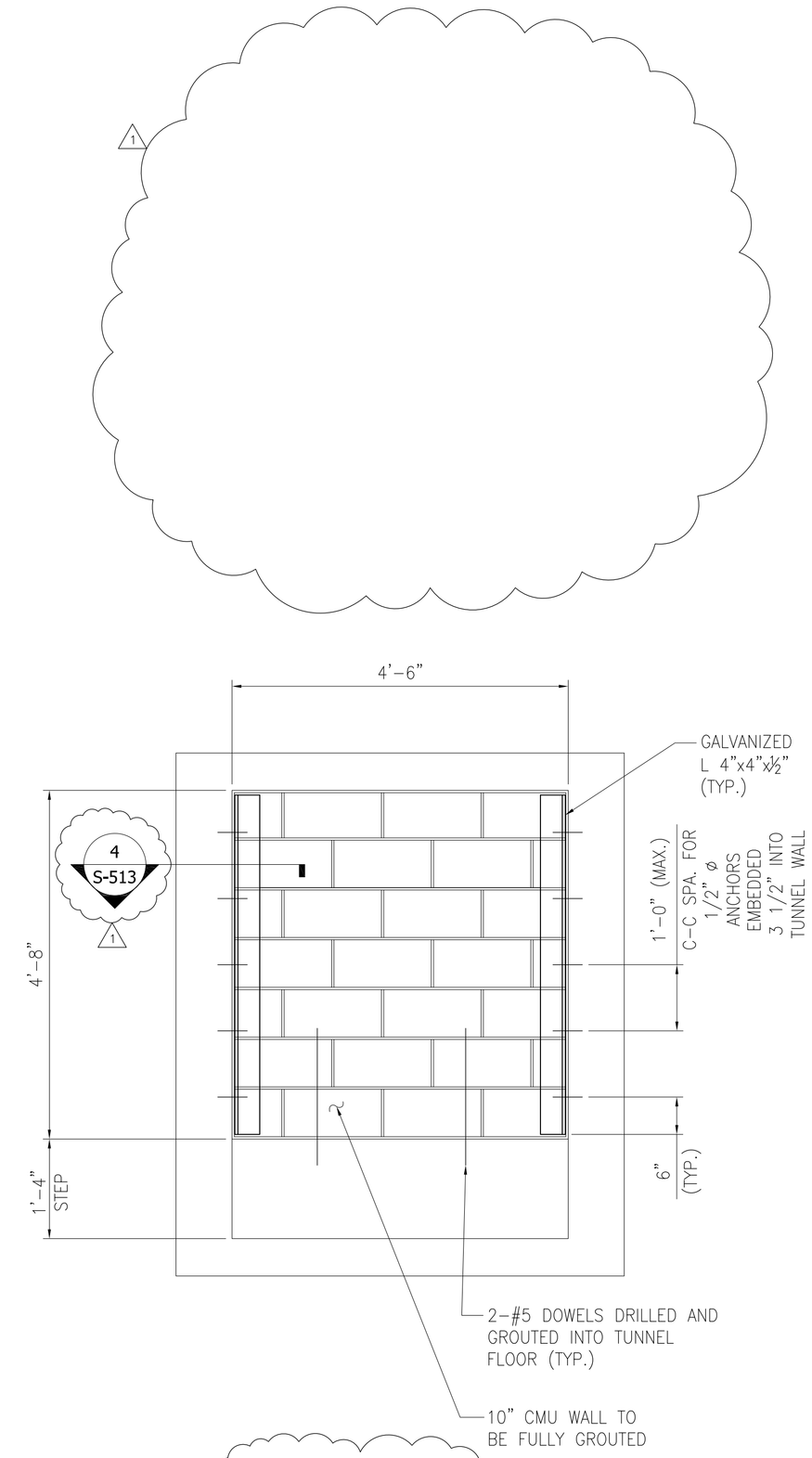

3 SECTION
SCALE: ¾"=1'-0"

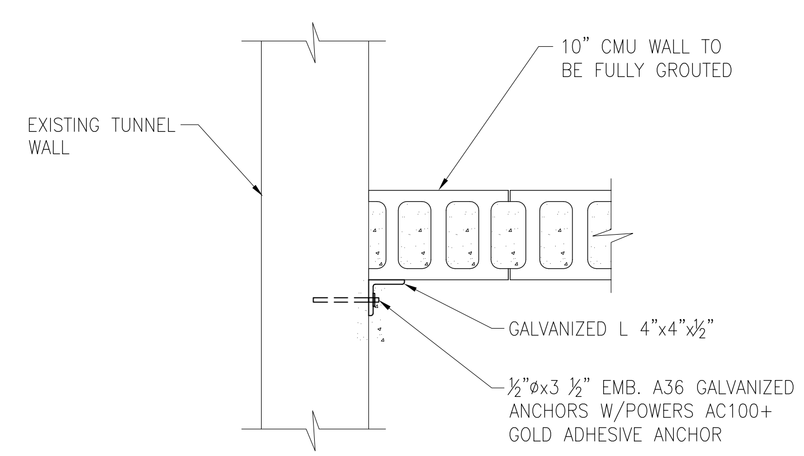

4 SECTION
SCALE: ¾"=1'-0"

NYS OFFICE OF GENERAL SERVICES
Serving New York
ANDREW M. CUOMO
Governor
ROANN M. DESTITO
Commissioner

CONSULTANT

GPI
GREENMAN-PEDERSEN, INC.
CONSULTING ENGINEERS
80 WOLF ROAD, SUITE 300
ALBANY, NY 12205
TEL: (518) 453-9431
FAX: (518) 453-9458
WWW.GPINET.COM

WARNING:
THE ALTERATION OF THIS MATERIAL IN ANY WAY, UNLESS DONE UNDER THE DIRECTION OF A COMPARABLE PROFESSIONAL, I.E. ARCHITECT FOR AN ARCHITECT, ENGINEER FOR AN ENGINEER OR LANDSCAPE ARCHITECT FOR A LANDSCAPE ARCHITECT, IS A VIOLATION OF THE NEW YORK STATE EDUCATION LAW AND/OR REGULATIONS AND IS A CLASS 'A' MISDEMEANOR.

STATE OF NEW YORK · JOHN G. RIZZO · 077511 · LICENSED PROFESSIONAL ENGINEER

CONTRACT:
CONSTRUCTION

TITLE:
REPAIR UNDERGROUND STEAM TUNNELS

LOCATION:
WILLARD DRUG TREATMENT CENTER
7116 COUNTY ROUTE 132
WILLARD, NEW YORK

CLIENT:
DEPARTMENT OF CORRECTIONS AND COMMUNITY SUPERVISION

REVISED DRAWING
2/22/2013

MARK	DATE	DESCRIPTION
1	02/22/2013	ADDENDUM 1
	02/06/2013	BID DOCUMENT

PROJECT NUMBER:	44288-C
DESIGNED BY:	M. BORGEL
DRAWN BY:	F. CUOCCIO
FIELD CHECK:	
APPROVED:	

SHEET TITLE:
TUNNEL I
BULK HEAD DETAILS

DRAWING NUMBER:
S-513

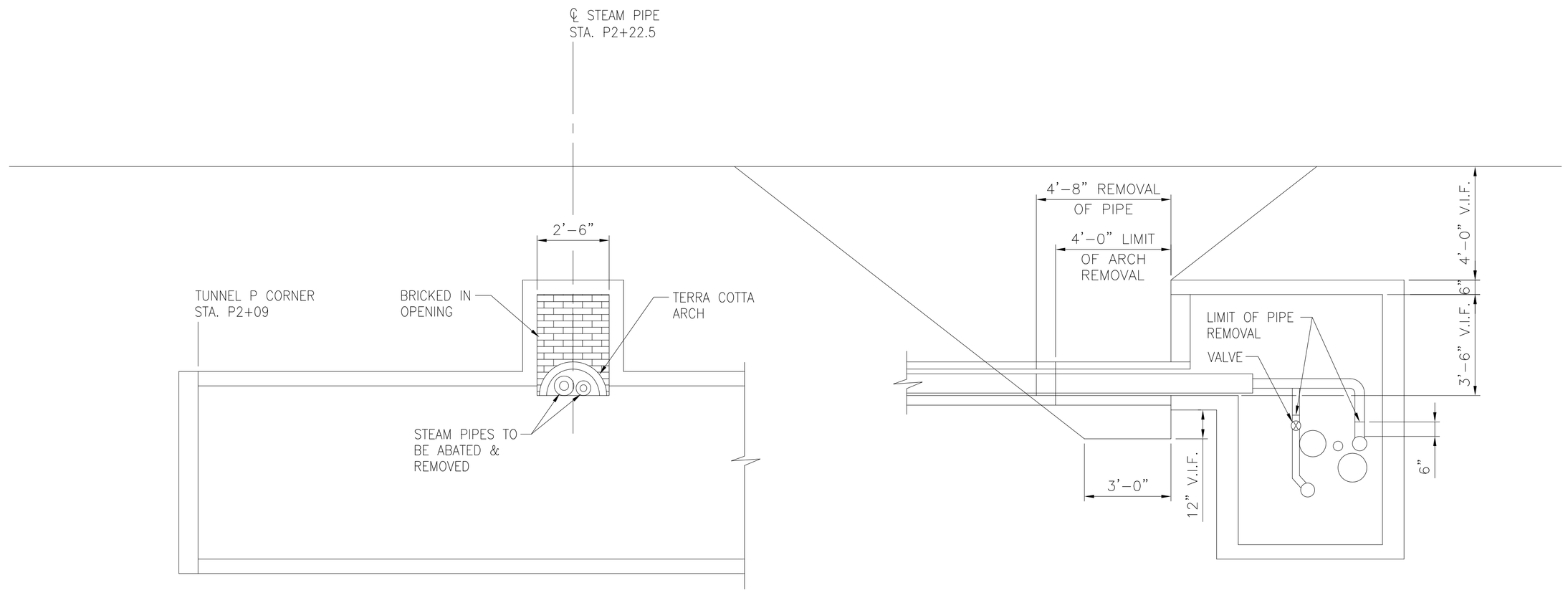

1 EXISTING TUNNEL P CLOSURE
STA. P2+22.5

SCALE: 3/8"=1'-0"

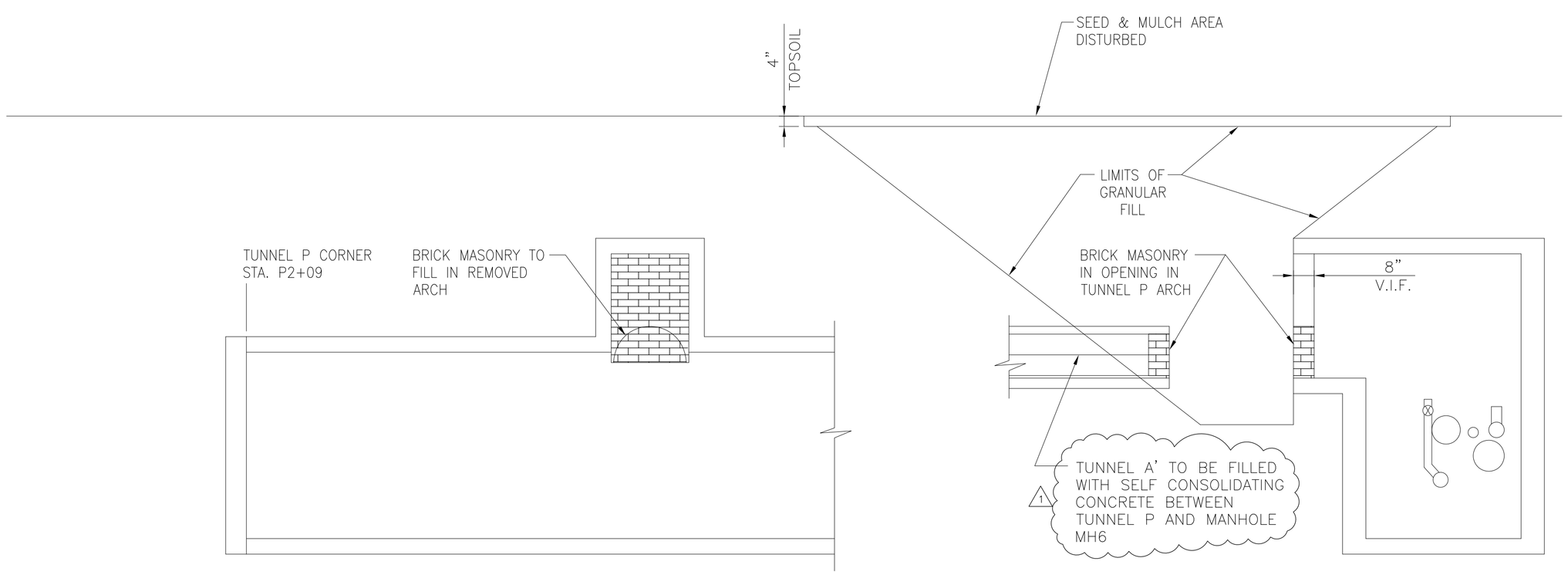

2 PROPOSED TUNNEL P CLOSURE
STA. P2+22.5

SCALE: 3/8"=1'-0"

NOTES:

1. CONTRACTOR TO REMOVE TERRA COTTA ARCH @ TUNNEL P PENETRATION & PARTIAL BRICKS TO STITCH NEW BRICKS W/EXISTING BRICKS.

2. THICKNESS OF EXISTING BRICK BULK HEAD IS UNKNOWN. IT IS ASSUMED TO BE 8" THICK.

NYS OFFICE OF GENERAL SERVICES
Serving New York
ANDREW M. CUOMO
Governor
ROANN M. DESTITO
Commissioner

CONSULTANT

GPI
GREENMAN-PEDERSEN, INC.
CONSULTING ENGINEERS
80 WOLF ROAD, SUITE 300
ALBANY, NY 12205
TEL: (518) 453-9431
FAX: (518) 453-9458
WWW.GPINET.COM

WARNING:
THE ALTERATION OF THIS MATERIAL IN ANY WAY, UNLESS DONE UNDER THE DIRECTION OF A COMPARABLE PROFESSIONAL, I.E. ARCHITECT FOR AN ARCHITECT, ENGINEER FOR AN ENGINEER OR LANDSCAPE ARCHITECT FOR A LANDSCAPE ARCHITECT, IS A VIOLATION OF THE NEW YORK STATE EDUCATION LAW AND/OR REGULATIONS AND IS A CLASS 'A' MISDEMEANOR.

STATE OF NEW YORK
JOHN G. RIZZO
077511
LICENSED PROFESSIONAL ENGINEER

CONTRACT:
CONSTRUCTION

TITLE:
REPAIR UNDERGROUND
STEAM TUNNELS

LOCATION:
WILLARD DRUG TREATMENT CENTER
7116 COUNTY ROUTE 132
WILLARD, NEW YORK

CLIENT:
DEPARTMENT OF CORRECTIONS
AND COMMUNITY SUPERVISION

REVISED DRAWING
2/22/2013

MARK	DATE	DESCRIPTION
1	02/22/2013	ADDENDUM 1
	02/06/2013	BID DOCUMENT

PROJECT NUMBER:	44288-C
DESIGNED BY:	M. BORGEL
DRAWN BY:	F. CUOCCIO
FIELD CHECK:	
APPROVED:	

SHEET TITLE:
TUNNEL P
CLOSURE DETAILS

DRAWING NUMBER:
S-514

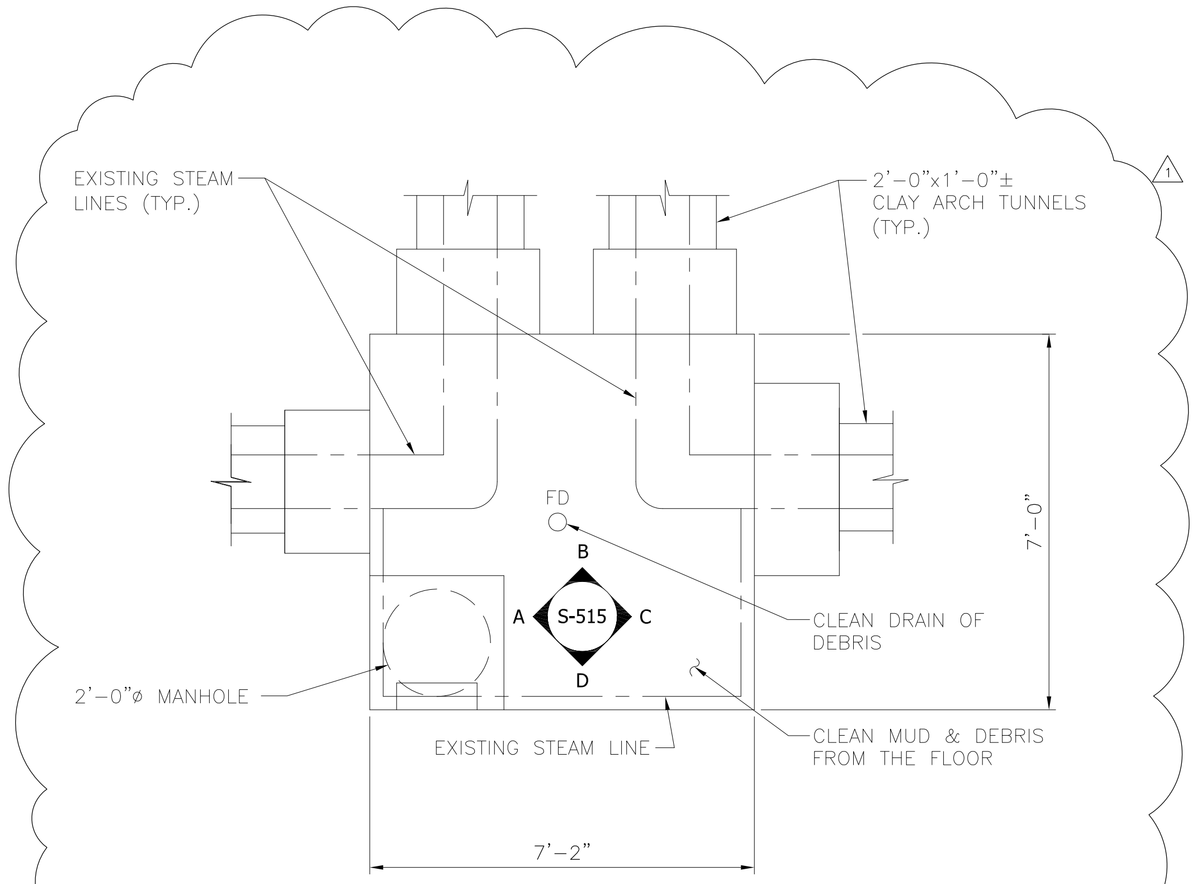

1 MANHOLE MH1/SERVICE VAULT 1 – PLAN
SCALE: ½"=1'-0"

EXISTING CONDITION SERVICE VAULT 1

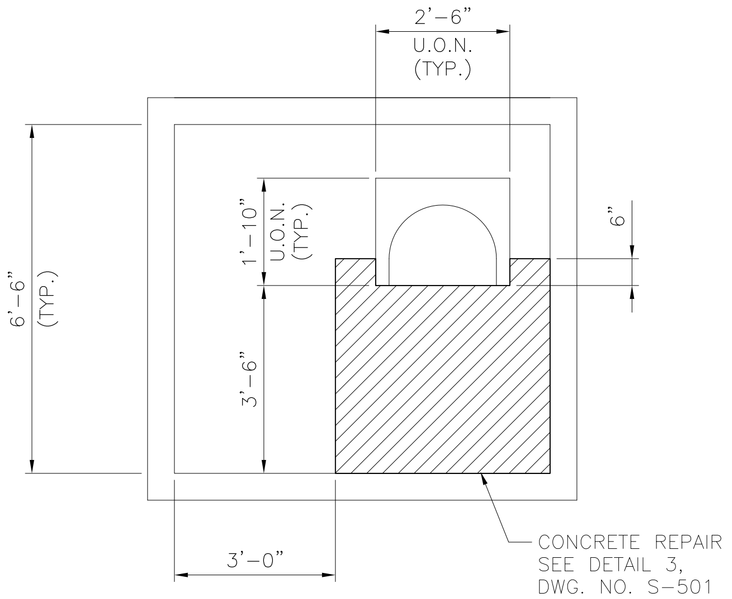

1 A ELEVATION
SCALE: ½"=1'-0"

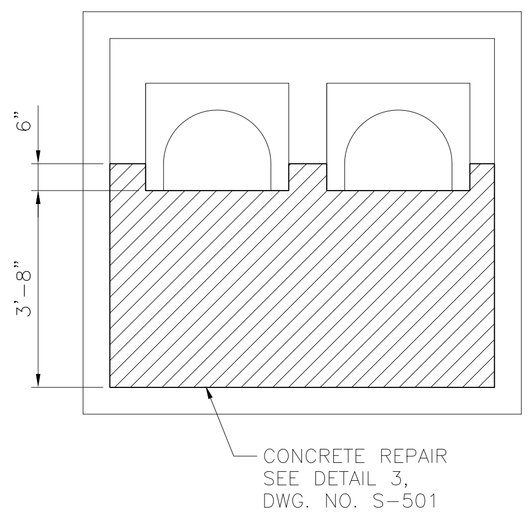

1 B ELEVATION
SCALE: ½"=1'-0"

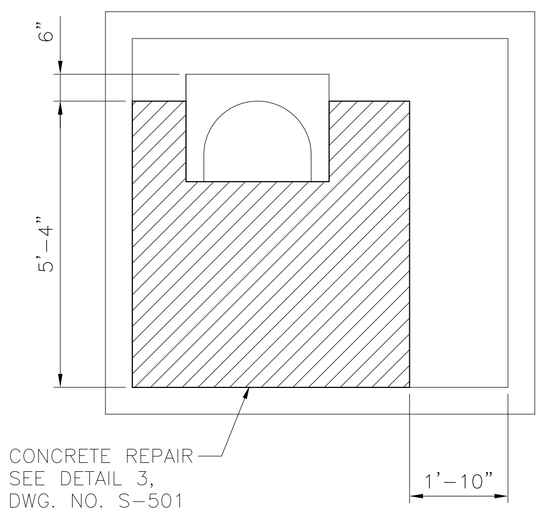

1 C ELEVATION
SCALE: ½"=1'-0"

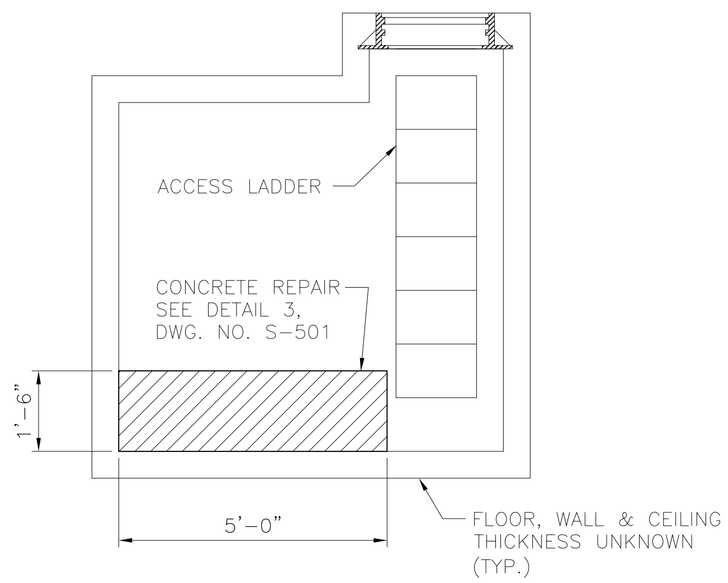

1 D ELEVATION
SCALE: ½"=1'-0"

NYS OFFICE OF GENERAL SERVICES
Serving New York
ANDREW M. CUOMO
Governor
ROANN M. DESTITO
Commissioner

CONSULTANT

GPI
GREENMAN-PEDERSEN, INC.
CONSULTING ENGINEERS
80 WOLF ROAD, SUITE 300
ALBANY, NY 12205
TEL: (518) 453-9431
FAX: (518) 453-9458
WWW.GPINET.COM

WARNING:
THE ALTERATION OF THIS MATERIAL IN ANY WAY, UNLESS DONE UNDER THE DIRECTION OF A COMPARABLE PROFESSIONAL, I.E. ARCHITECT FOR AN ARCHITECT, ENGINEER FOR AN ENGINEER OR LANDSCAPE ARCHITECT FOR A LANDSCAPE ARCHITECT, IS A VIOLATION OF THE NEW YORK STATE EDUCATION LAW AND/OR REGULATIONS AND IS A CLASS 'A' MISDEMEANOR.

STATE OF NEW YORK
JOHN G. RIZZO
077511
LICENSED PROFESSIONAL ENGINEER

CONTRACT:
CONSTRUCTION

TITLE:
REPAIR UNDERGROUND STEAM TUNNELS

LOCATION:
WILLARD DRUG TREATMENT CENTER
7116 COUNTY ROUTE 132
WILLARD, NEW YORK

CLIENT:
DEPARTMENT OF CORRECTIONS AND COMMUNITY SUPERVISION

REVISED DRAWING
2/22/2013

MARK	DATE	DESCRIPTION
1	02/22/2013	ADDENDUM 1
	02/06/2013	BID DOCUMENT

PROJECT NUMBER:	44288-C
DESIGNED BY:	M. BORGEL
DRAWN BY:	F. CUOCCIO
FIELD CHECK:	
APPROVED:	

SHEET TITLE:
SERVICE VAULT 1 DETAILS

DRAWING NUMBER:
S-515

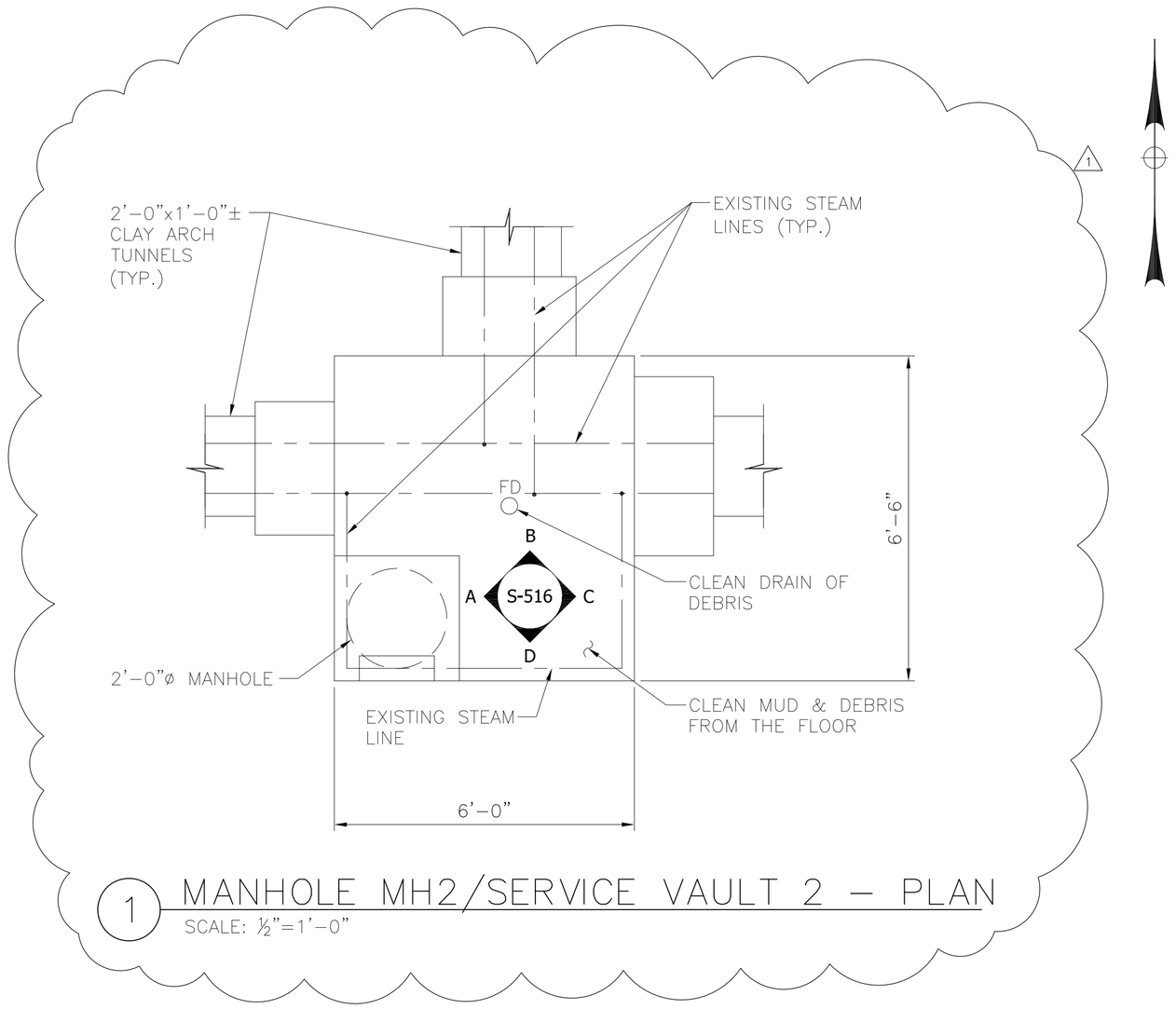

1 MANHOLE MH2/SERVICE VAULT 2 – PLAN
SCALE: ½"=1'-0"

EXISTING CONDITION SERVICE VAULT 2

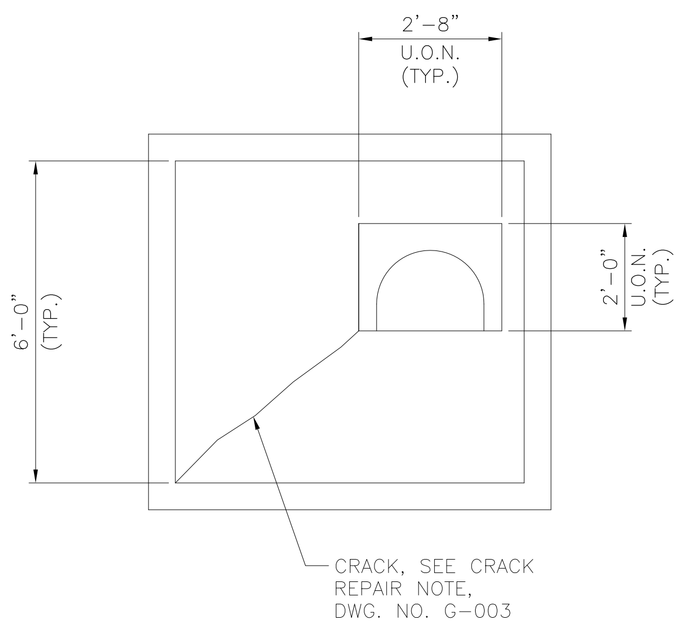

A ELEVATION
SCALE: ½"=1'-0"

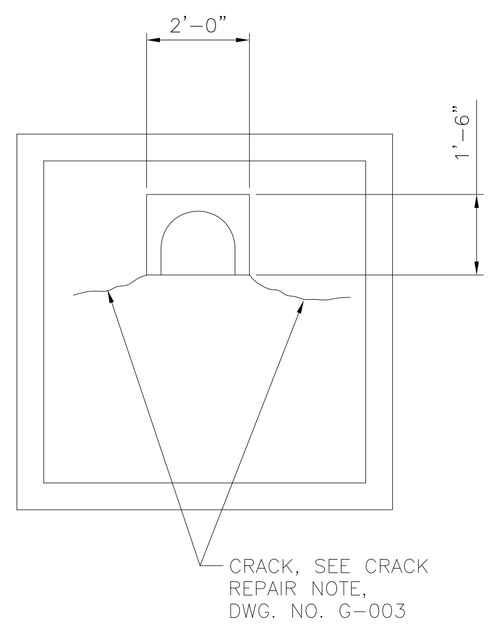

B ELEVATION
SCALE: ½"=1'-0"

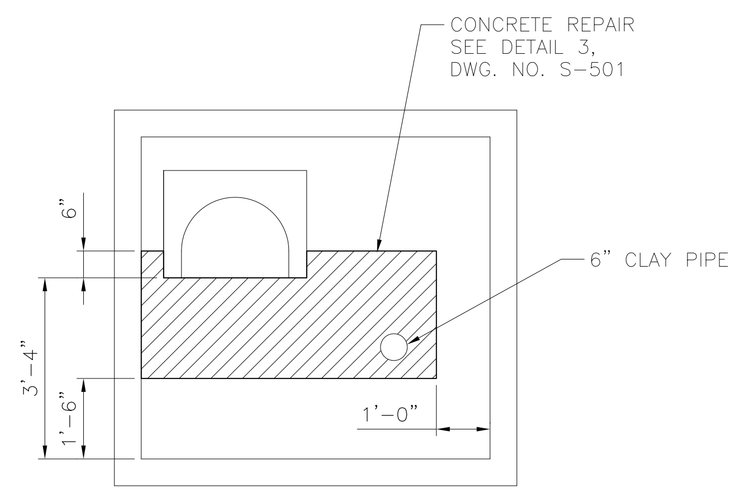

C ELEVATION
SCALE: ½"=1'-0"

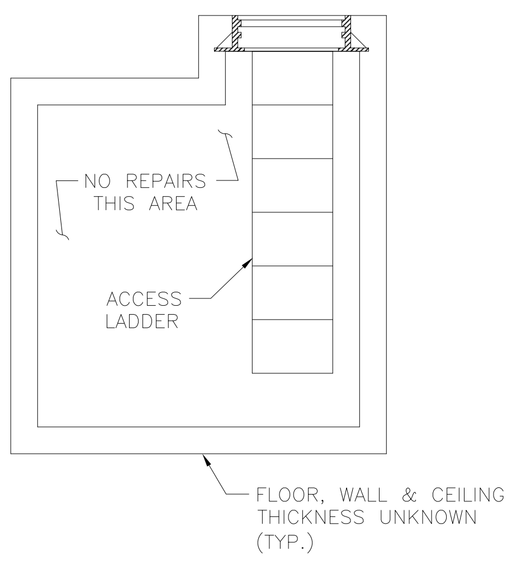

D ELEVATION
SCALE: ½"=1'-0"

NYS OFFICE OF GENERAL SERVICES
Serving New York
ANDREW M. CUOMO
Governor
ROANN M. DESTITO
Commissioner

CONSULTANT

GPI
GREENMAN-PEDERSEN, INC.
CONSULTING ENGINEERS
80 WOLF ROAD, SUITE 300
ALBANY, NY 12205
TEL: (518) 453-9431
FAX: (518) 453-9458
WWW.GPINET.COM

WARNING:
THE ALTERATION OF THIS MATERIAL IN ANY WAY, UNLESS DONE UNDER THE DIRECTION OF A COMPARABLE PROFESSIONAL, I.E. ARCHITECT FOR AN ARCHITECT, ENGINEER FOR AN ENGINEER OR LANDSCAPE ARCHITECT FOR A LANDSCAPE ARCHITECT, IS A VIOLATION OF THE NEW YORK STATE EDUCATION LAW AND/OR REGULATIONS AND IS A CLASS 'A' MISDEMEANOR.

STATE OF NEW YORK
JOHN G. RIZZO
077511
LICENSED PROFESSIONAL ENGINEER

CONTRACT:
CONSTRUCTION

TITLE:
REPAIR UNDERGROUND
STEAM TUNNELS

LOCATION:
WILLARD DRUG TREATMENT CENTER
7116 COUNTY ROUTE 132
WILLARD, NEW YORK

CLIENT:
DEPARTMENT OF CORRECTIONS
AND COMMUNITY SUPERVISION

REVISED DRAWING
2/22/2013

MARK	DATE	DESCRIPTION
1	02/22/2013	ADDENDUM 1
	02/06/2013	BID DOCUMENT

PROJECT NUMBER:	44288-C
DESIGNED BY:	M. BORGEL
DRAWN BY:	F. CUOCCIO
FIELD CHECK:	
APPROVED:	

SHEET TITLE:
SERVICE VAULT 2
DETAILS

DRAWING NUMBER:
S-516

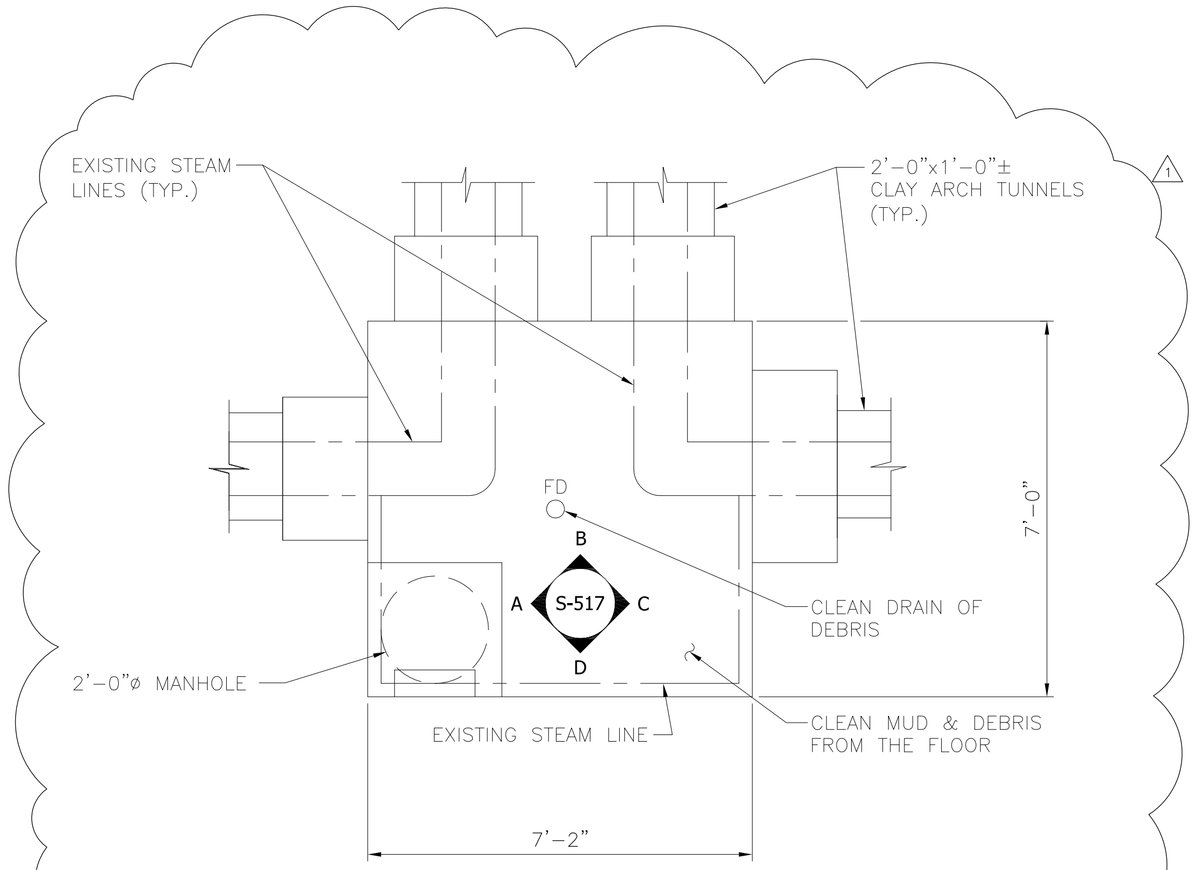

1 MANHOLE MH3/SERVICE VAULT 3 – PLAN
SCALE: ½"=1'-0"

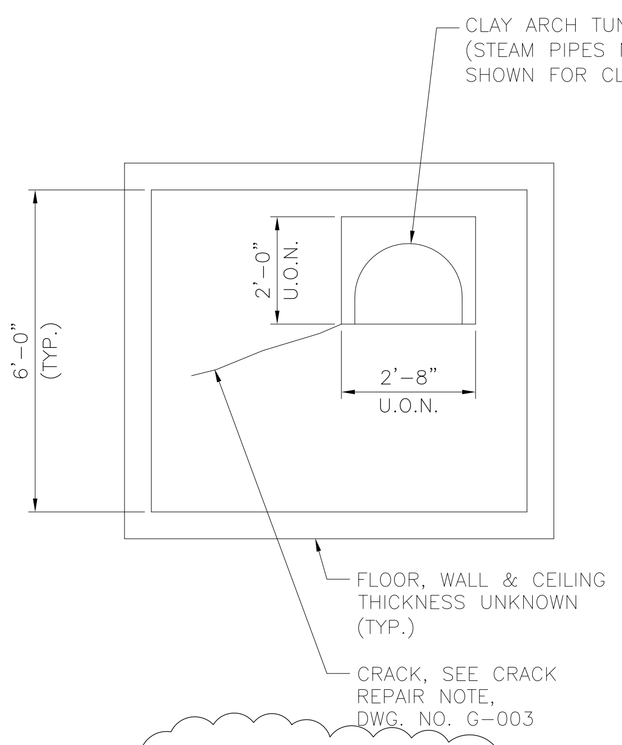

1 A ELEVATION
SCALE: ½"=1'-0"

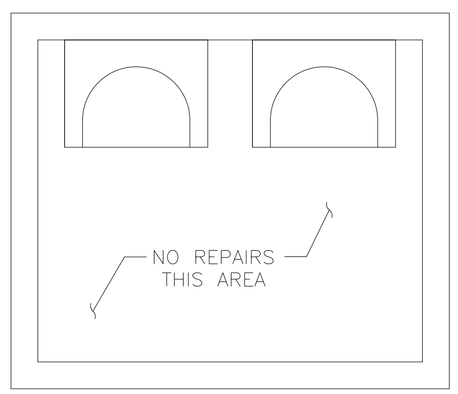

1 B ELEVATION
SCALE: ½"=1'-0"

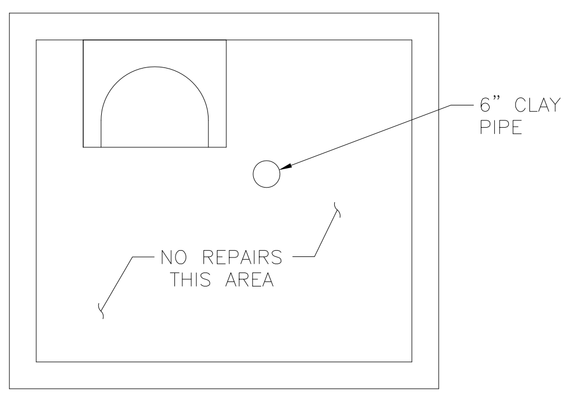

1 C ELEVATION
SCALE: ½"=1'-0"

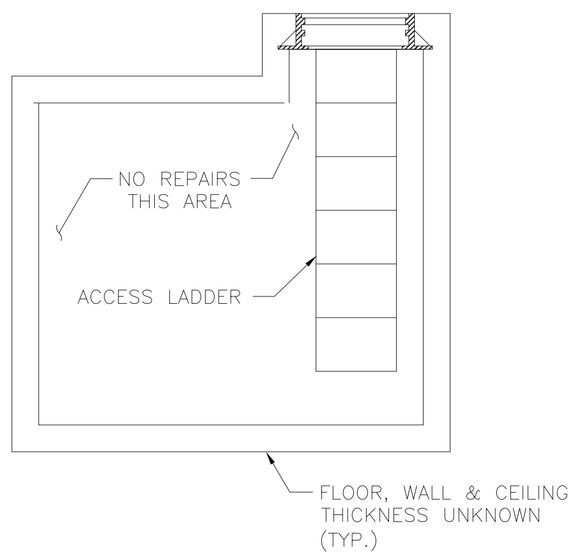

1 D ELEVATION
SCALE: ½"=1'-0"

NYS OFFICE OF GENERAL SERVICES
Serving New York

ANDREW M. CUOMO
Governor
ROANN M. DESTITO
Commissioner

CONSULTANT

GPI
GREENMAN-PEDERSEN, INC.
CONSULTING ENGINEERS
80 WOLF ROAD, SUITE 300
ALBANY, NY 12205
TEL: (518) 453-9431
FAX: (518) 453-9458
WWW.GPINET.COM

WARNING:
THE ALTERATION OF THIS MATERIAL IN ANY WAY, UNLESS DONE UNDER THE DIRECTION OF A COMPARABLE PROFESSIONAL, I.E. ARCHITECT FOR AN ARCHITECT, ENGINEER FOR AN ENGINEER OR LANDSCAPE ARCHITECT FOR A LANDSCAPE ARCHITECT, IS A VIOLATION OF THE NEW YORK STATE EDUCATION LAW AND/OR REGULATIONS AND IS A CLASS 'A' MISDEMEANOR.

STATE OF NEW YORK · JOHN G. RIZZO · 077511 · LICENSED PROFESSIONAL ENGINEER

CONTRACT:
CONSTRUCTION

TITLE:
REPAIR UNDERGROUND STEAM TUNNELS

LOCATION:
WILLARD DRUG TREATMENT CENTER
7116 COUNTY ROUTE 132
WILLARD, NEW YORK

CLIENT:
DEPARTMENT OF CORRECTIONS AND COMMUNITY SUPERVISION

REVISED DRAWING
2/22/2013

MARK	DATE	DESCRIPTION
1	02/22/2013	ADDENDUM 1
	02/06/2013	BID DOCUMENT

PROJECT NUMBER:	44288-C
DESIGNED BY:	M. BORGEL
DRAWN BY:	F. CUOCCIO
FIELD CHECK:	
APPROVED:	

SHEET TITLE:
SERVICE VAULT 3 DETAILS

DRAWING NUMBER:
S-517

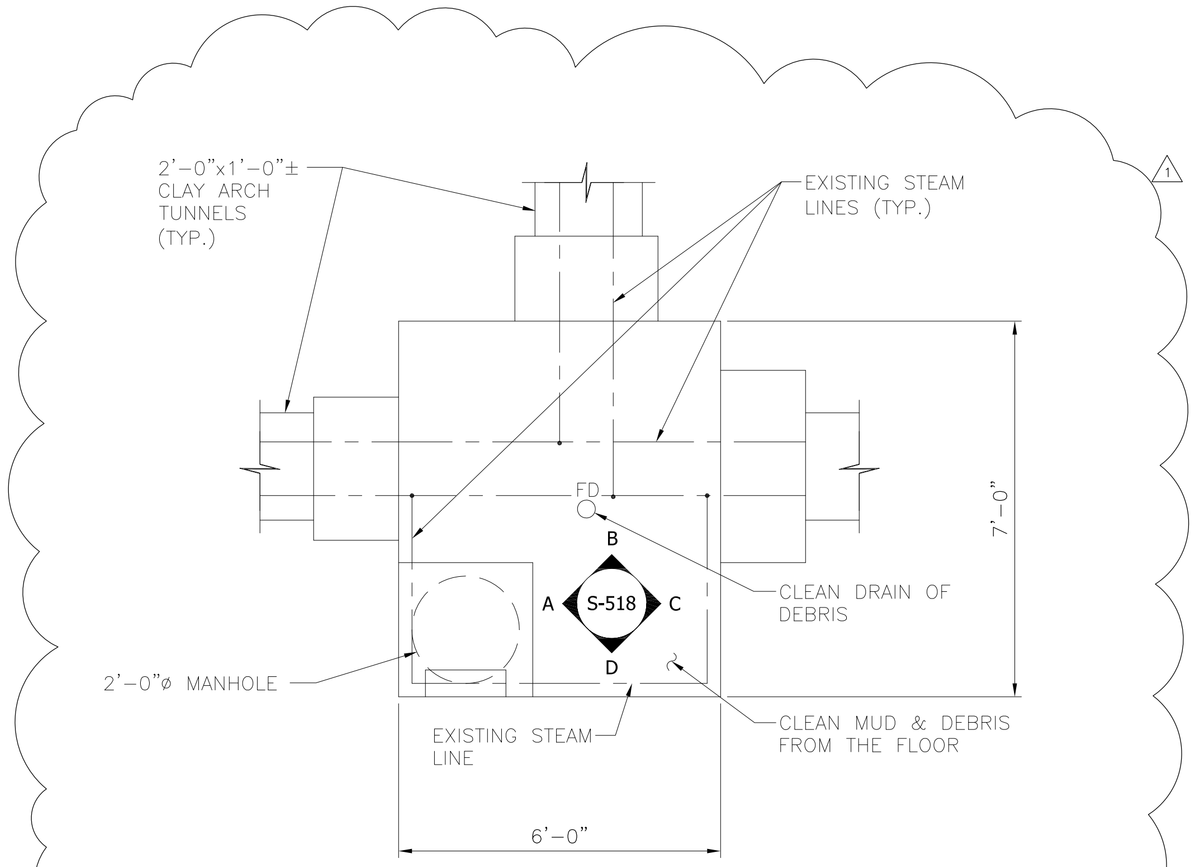

1 MANHOLE MH4/SERVICE VAULT 4 – PLAN
SCALE: ½"=1'-0"

EXISTING CONDITION SERVICE VAULT 4

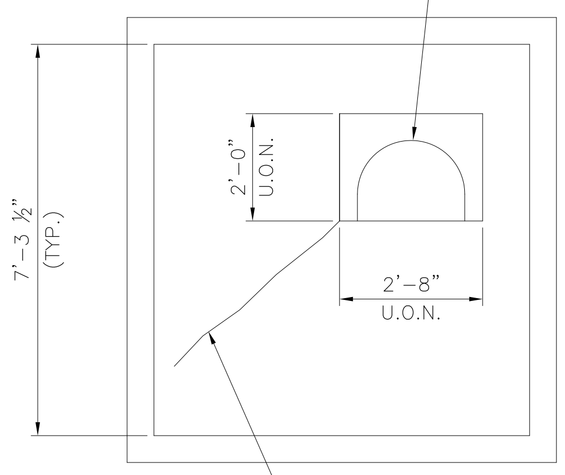

A ELEVATION
SCALE: ½"=1'-0"

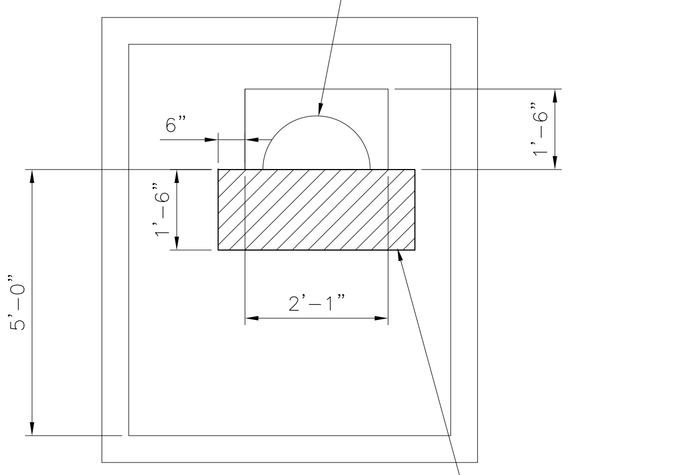

B ELEVATION
SCALE: ½"=1'-0"

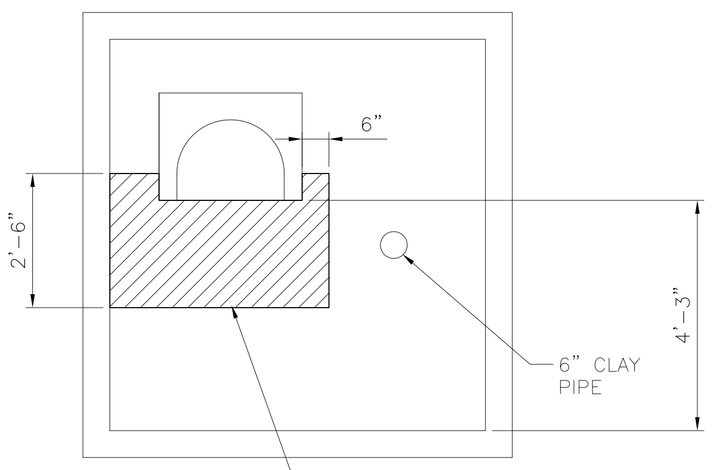

C ELEVATION
SCALE: ½"=1'-0"

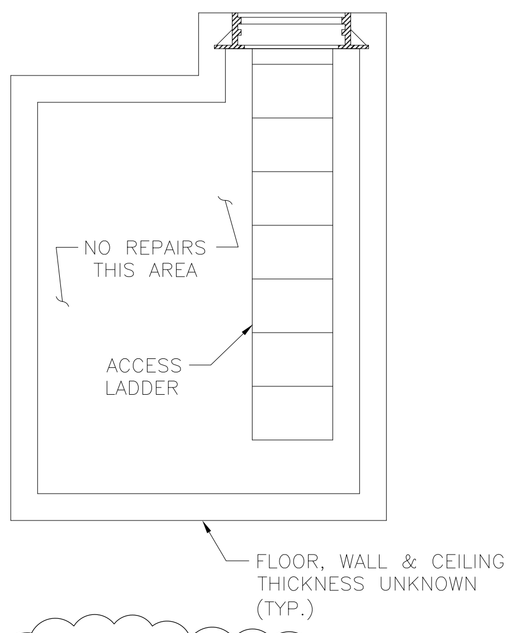

D ELEVATION
SCALE: ½"=1'-0"

NYS OFFICE OF GENERAL SERVICES
Serving New York
ANDREW M. CUOMO
Governor
ROANN M. DESTITO
Commissioner

CONSULTANT

GPI
GREENMAN-PEDERSEN, INC.
CONSULTING ENGINEERS
80 WOLF ROAD, SUITE 300
ALBANY, NY 12205
TEL: (518) 453-9431
FAX: (518) 453-9458
WWW.GPINET.COM

WARNING:
THE ALTERATION OF THIS MATERIAL IN ANY WAY, UNLESS DONE UNDER THE DIRECTION OF A COMPARABLE PROFESSIONAL, I.E. ARCHITECT FOR AN ARCHITECT, ENGINEER FOR AN ENGINEER OR LANDSCAPE ARCHITECT FOR A LANDSCAPE ARCHITECT, IS A VIOLATION OF THE NEW YORK STATE EDUCATION LAW AND/OR REGULATIONS AND IS A CLASS 'A' MISDEMEANOR.

STATE OF NEW YORK
JOHN G. RIZZO
077511
LICENSED PROFESSIONAL ENGINEER

CONTRACT:
CONSTRUCTION

TITLE:
REPAIR UNDERGROUND
STEAM TUNNELS

LOCATION:
WILLARD DRUG TREATMENT CENTER
7116 COUNTY ROUTE 132
WILLARD, NEW YORK

CLIENT:
DEPARTMENT OF CORRECTIONS
AND COMMUNITY SUPERVISION

REVISED DRAWING
2/22/2013

MARK	DATE	DESCRIPTION
1	02/22/2013	ADDENDUM 1
	02/06/2013	BID DOCUMENT

PROJECT NUMBER:	44288-C
DESIGNED BY:	M. BORGEL
DRAWN BY:	F. CUOCCIO
FIELD CHECK:	
APPROVED:	

SHEET TITLE:
SERVICE VAULT 4
DETAILS

DRAWING NUMBER:
S-518

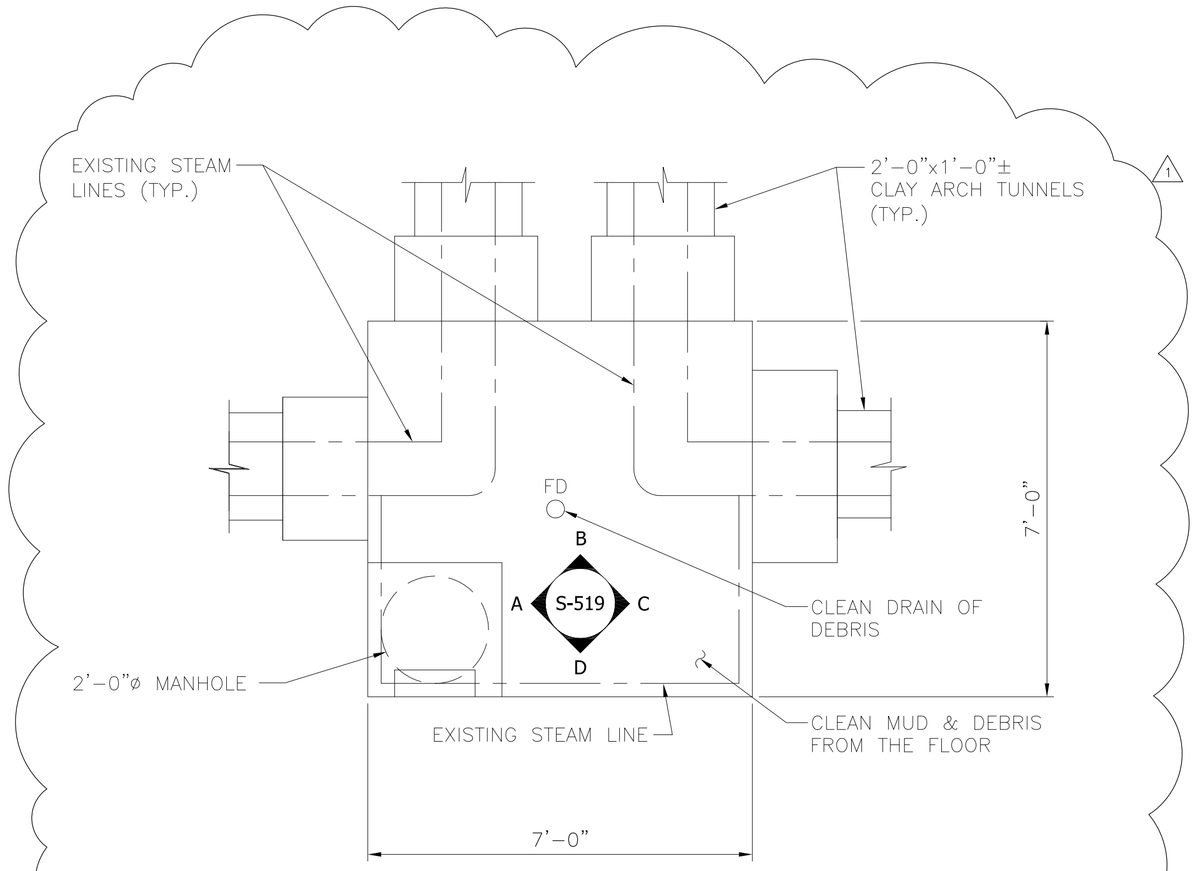

1 MANHOLE MH5/SERVICE VAULT 5 – PLAN
SCALE: ½"=1'-0"

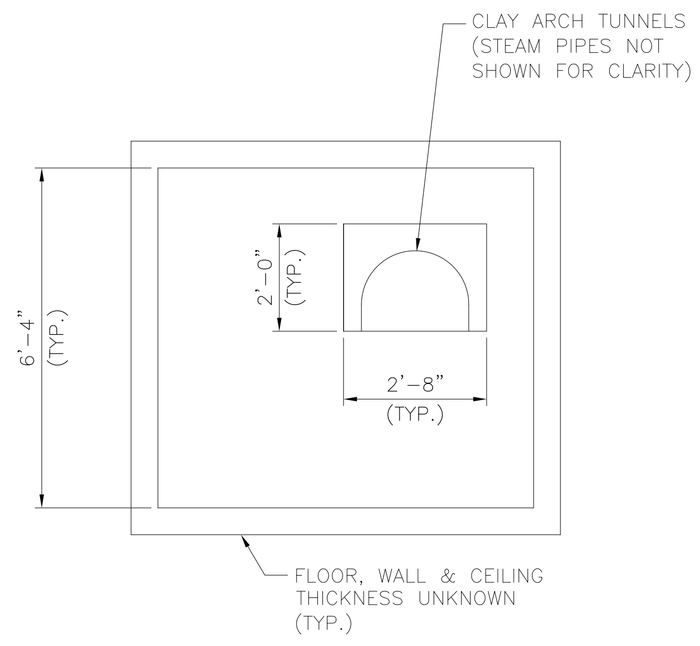

1 A ELEVATION
SCALE: ½"=1'-0"

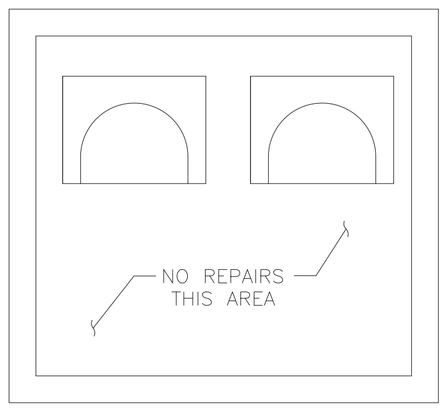

1 B ELEVATION
SCALE: ½"=1'-0"

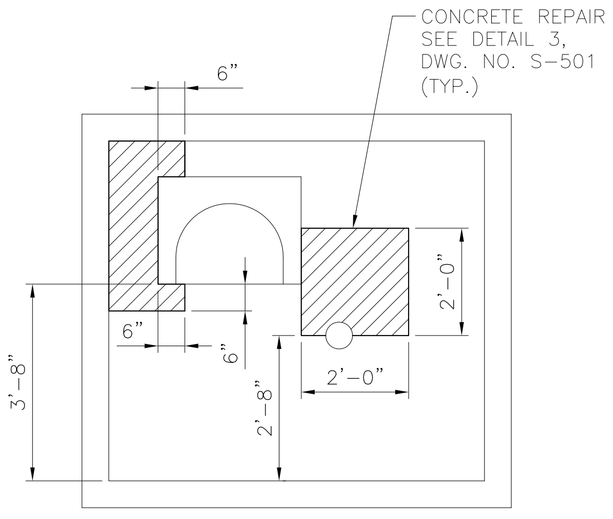

1 C ELEVATION
SCALE: ½"=1'-0"

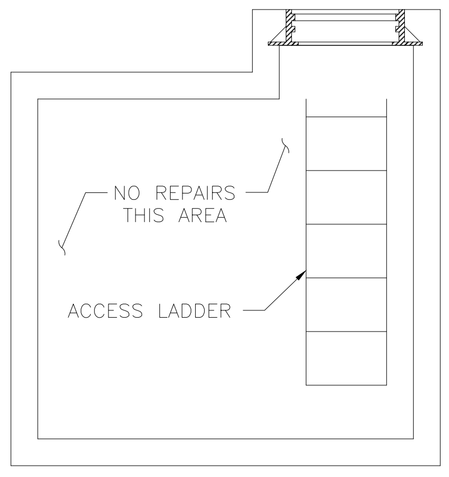

1 D ELEVATION
SCALE: ½"=1'-0"

NYS OFFICE OF GENERAL SERVICES
Serving New York
ANDREW M. CUOMO
Governor
ROANN M. DESTITO
Commissioner

CONSULTANT

GPI
GREENMAN-PEDERSEN, INC.
CONSULTING ENGINEERS
80 WOLF ROAD, SUITE 300
ALBANY, NY 12205
TEL: (518) 453-9431
FAX: (518) 453-9458
WWW.GPINET.COM

WARNING:
THE ALTERATION OF THIS MATERIAL IN ANY WAY, UNLESS DONE UNDER THE DIRECTION OF A COMPARABLE PROFESSIONAL, I.E. ARCHITECT FOR AN ARCHITECT, ENGINEER FOR AN ENGINEER OR LANDSCAPE ARCHITECT FOR A LANDSCAPE ARCHITECT, IS A VIOLATION OF THE NEW YORK STATE EDUCATION LAW AND/OR REGULATIONS AND IS A CLASS 'A' MISDEMEANOR.

STATE OF NEW YORK · JOHN G. RIZZO · 077511 · LICENSED PROFESSIONAL ENGINEER

CONTRACT:
CONSTRUCTION

TITLE:
REPAIR UNDERGROUND STEAM TUNNELS

LOCATION:
WILLARD DRUG TREATMENT CENTER
7116 COUNTY ROUTE 132
WILLARD, NEW YORK

CLIENT:
DEPARTMENT OF CORRECTIONS AND COMMUNITY SUPERVISION

REVISED DRAWING
2/22/2013

MARK	DATE	DESCRIPTION
1	02/22/2013	ADDENDUM 1
	02/06/2013	BID DOCUMENT

PROJECT NUMBER:	44288-C
DESIGNED BY:	M. BORGEL
DRAWN BY:	F. CUOCCIO
FIELD CHECK:	
APPROVED:	

SHEET TITLE:
SERVICE VAULT 5 DETAILS

DRAWING NUMBER:
S-519

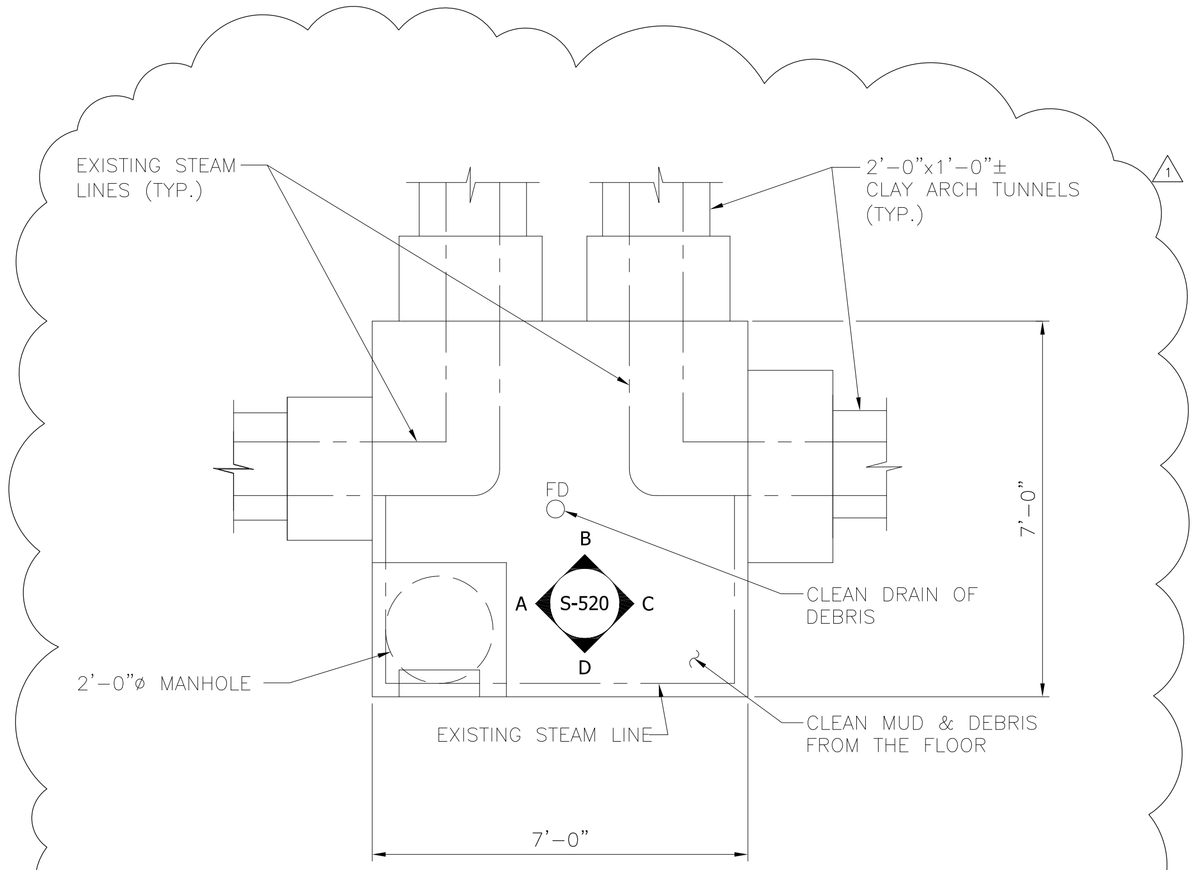

1 MANHOLE MH6/SERVICE VAULT 6 – PLAN
SCALE: ½"=1'-0"

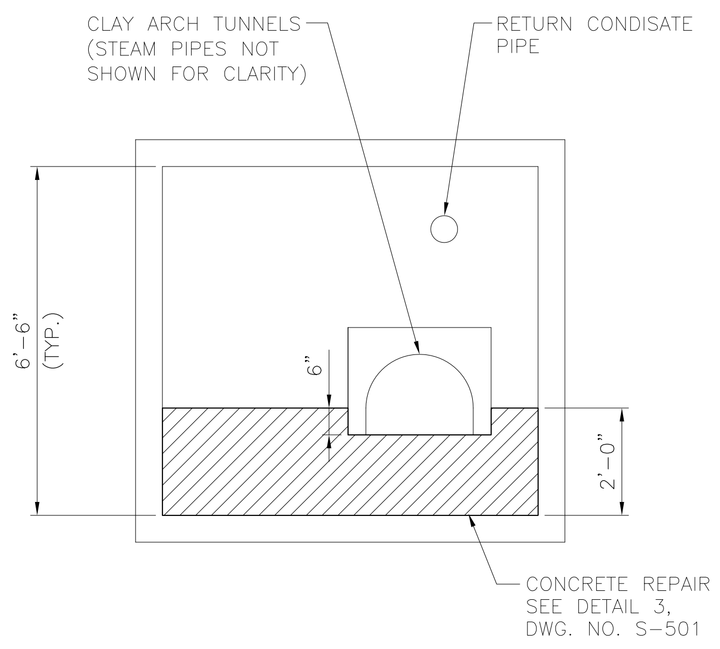

1 A ELEVATION
SCALE: ½"=1'-0"

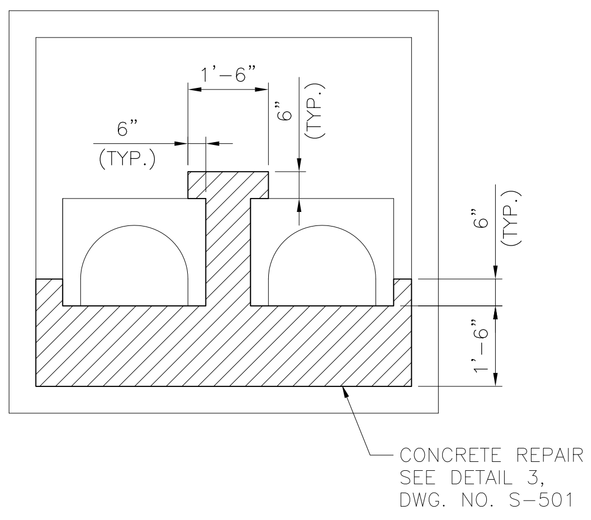

1 B ELEVATION
SCALE: ½"=1'-0"

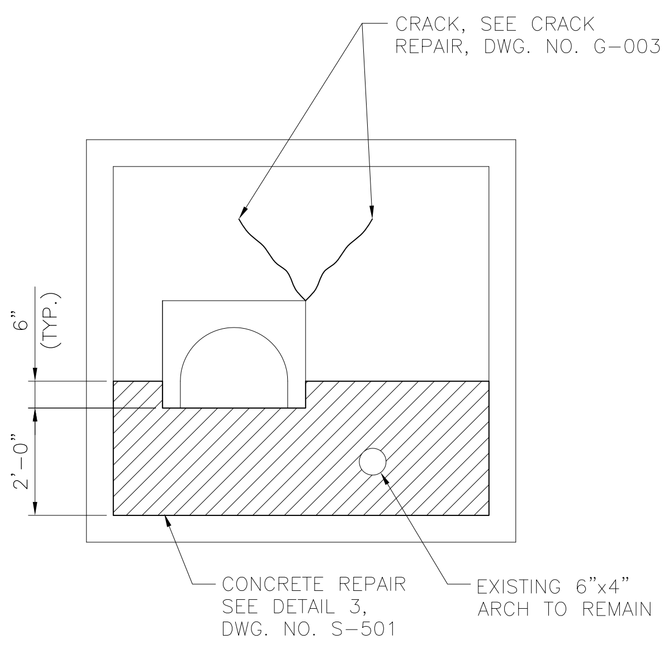

1 C ELEVATION
SCALE: ½"=1'-0"

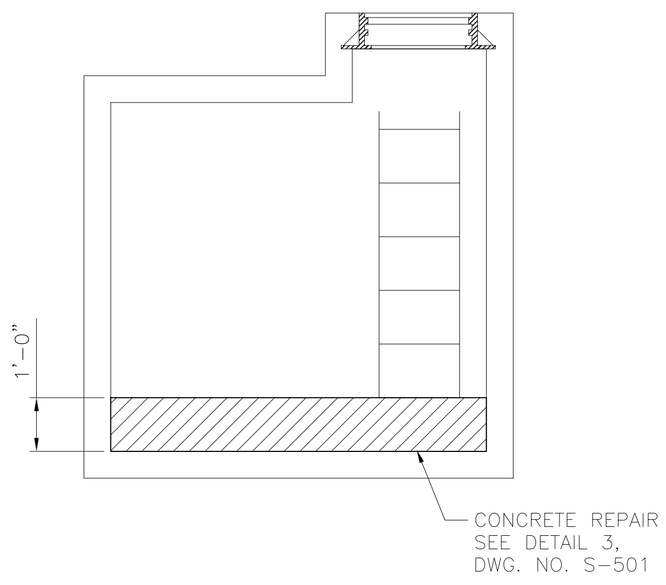

1 D ELEVATION
SCALE: ½"=1'-0"

NYS OFFICE OF GENERAL SERVICES
Serving New York
ANDREW M. CUOMO
Governor
ROANN M. DESTITO
Commissioner

CONSULTANT

GPI
GREENMAN-PEDERSEN, INC.
CONSULTING ENGINEERS
80 WOLF ROAD, SUITE 300
ALBANY, NY 12205
TEL: (518) 453-9431
FAX: (518) 453-9458
WWW.GPINET.COM

WARNING:
THE ALTERATION OF THIS MATERIAL IN ANY WAY, UNLESS DONE UNDER THE DIRECTION OF A COMPARABLE PROFESSIONAL, I.E. ARCHITECT FOR AN ARCHITECT, ENGINEER FOR AN ENGINEER OR LANDSCAPE ARCHITECT FOR A LANDSCAPE ARCHITECT, IS A VIOLATION OF THE NEW YORK STATE EDUCATION LAW AND/OR REGULATIONS AND IS A CLASS 'A' MISDEMEANOR.

STATE OF NEW YORK · JOHN G. RIZZO · 077511 · LICENSED PROFESSIONAL ENGINEER

CONTRACT:
CONSTRUCTION

TITLE:
REPAIR UNDERGROUND STEAM TUNNELS

LOCATION:
WILLARD DRUG TREATMENT CENTER
7116 COUNTY ROUTE 132
WILLARD, NEW YORK

CLIENT:
DEPARTMENT OF CORRECTIONS AND COMMUNITY SUPERVISION

REVISED DRAWING
2/22/2013

MARK	DATE	DESCRIPTION
1	02/22/2013	ADDENDUM 1
	02/06/2013	BID DOCUMENT

PROJECT NUMBER:	44288-C
DESIGNED BY:	M. BORGEL
DRAWN BY:	F. CUOCCIO
FIELD CHECK:	
APPROVED:	

SHEET TITLE:
SERVICE VAULT 6 DETAILS

DRAWING NUMBER:
S-520

STANCHION LOCATION FOR REPAIRS

COMPLETE STANCHION REPLACEMENT

TUNNEL	STANCHION NO.	STATION	EXPANSION	*FIXED
A	A257	A38+92	X	
A	A258	A39+08	X	
A	A259	A39+23	X	
A	A260	A39+39	X	
A	A261	A39+54	X	
A	A262	A39+70	X	
A	A263	A39+84	X	
A	A264	A40+00	X	
A	A265	A40+16	X	
A	A266	A40+32	X	
A	A267	A40+48	X	
A	A268	A40+63	X	
A	A69	A10+10	X	
A	A70	A10+25	X	
A	A71	A10+42	X	
A	A92	A13+60	X	
A	A93	A13+75	X	
A	A94	A13+90	X	
A	A95	A14+05	X	
A	A104	A15+35	X	
A	A105	A15+50	X	
A	A108	A15+97	X	
A	A109	A16+13	X	
A	A114	A16+82	X	
A	A115	A16+96	X	
A	A116	A17+10	X	
A	A117	A17+35	X	
A	A119	A17+65	X	
A	A120	A17+80	X	
A	A121	A17+95	X	
A	A123	A18+25	X	
A	A124	A18+42	X	
A	A125	A18+57	X	
A	A126	A18+72	X	
A	A127	A18+86	X	
A	A128	A19+02	X	
A	A131	A19+46	X	
A	A137	A20+30	X	
A	A138	A20+48	X	
A	A139	A20+63	X	
A	A143	A21+45	X	
A	A145	A21+70	X	
A	A146	A21+85	X	
A	A147	A22+00	X	
A	A148	A22+15	X	
A	A149	A22+30	X	
A	A150	A22+45	X	
A	A151	A22+60	X	
A	A154	A23+06	X	
A	A159	A23+82	X	
A	A160	A23+97	X	
A	A161	A24+13	X	

NOTE:

*PARTIAL REPLACEMENT–VERTICAL AND BASE ANGLES

REFERENCE NOTE:

SEE DWG. NO. S–511 FOR STANCHION REPAIR DETAILS.

STANCHION LOCATION FOR REPAIRS

COMPLETE STANCHION REPLACEMENT

TUNNEL	STANCHION NO.	STATION	EXPANSION	*FIXED
A	A168	A25+23	X	
A	A169	A25+43	X	
A	A174	A26+12	X	
A	A175	A26+17	X	
A	A216	A32+50	X	
A	A217	A32+68	X	
A	A218	A32+82	X	
A	A219	A32+98	X	
A	A220	A33+13	X	
A	A221	A33+28	X	
A	A222	A33+35	X	
A	A223	A33+50	X	
A	A224	A33+65	X	
A	A225	A33+80	X	
A	A226	A33+95	X	
A	A269	A40+79	X	
A	A270	A40+95	X	
A	A271	A41+10	X	
A	A272	A41+25	X	
A	A273	A41+42	X	
A	A274	A41+58	X	
A	A275	A41+72	X	
A	A276	A41+87	X	
A	A277	A42+03	X	
A	A278	A42+20		X
A	A279	A42+35	X	
A	A280	A42+47	X	
A	A281	A42+65	X	
A	A282	A42+79	X	
A	A283	A42+95	X	
A	A284	A43+10	X	
A	A285	A43+25	X	
A	A286	A43+40	X	
A	A287	A43+55	X	
A	A288	A43+70	X	
A	A289	A43+85	X	
A	A290	A44+00	X	
A	A291	A44+15	X	
A	A292	A44+30	X	
A	A293	A44+45	X	
A	A294	A44+60	X	
A	A295	A44+75	X	
A	A296	A44+90	X	
A	A297	A45+05	X	
A	A298	A45+22	X	
A	A299	A45+38	X	
A	A300	A45+52	X	
A	A301	A45+67	X	
A	A302	A45+81	X	
A	A303	A45+95	X	
A	A304	A46+10	X	
A	A305	A46+27	X	
A	A306	A46+42	X	
A	A307	A46+58	X	
A	A308	46+72	X	

STANCHION LOCATION FOR REPAIRS

COMPLETE STANCHION REPLACEMENT

TUNNEL	STANCHION NO.	STATION	EXPANSION	*FIXED
A	A309	A46+88	X	
A	A310	A47+03	X	
A	A311	A47+18	X	
A	A312	A47+33	X	
A	A313	A47+46	X	
A	A320	A48+55	X	
A	A321	A48+70	X	
A	A322	A48+85	X	
A	A323	A49+00	X	
A	A324	A49+15	X	
A	A325	A49+30	X	
A	A326	A49+50	X	
A	A327	A49+60	X	
A	A328	A49+75	X	
A	A329	A49+90	X	
A	A330	A50+05		X
A	A331	A50+21	X	
A	A332	A50+37	X	
A	A333	A50+50	X	
A	A334	A50+66	X	
A	A335	A50+82	X	
A	A336	A50+97	X	
A	A337	A51+13	X	
A	A338	A51+28	X	
A	A339	A51+43	X	
A	A340	A51+58	X	
A	A341	A51+73	X	
A	A342	A51+88	X	
A	A343	A52+03	X	
A	A344	A52+18	X	
A	A345	A52+33	X	
A	A346	A52+49	X	
A	A347	A52+64	X	
A	A348	A52+79	X	
A	A349	A52+95	X	
A	A350	A53+08	X	
A	A351	A53+23	X	
A	A352	A53+40	X	
A	A353	A53+55	X	
A	A354	A53+70	X	
A	A355	A53+85	X	
A	A356	A54+00	X	
A	A357	A54+15	X	
A	A358	A54+27	X	
A	A359	A54+38	X	
A	A360	A54+43	X	
A	A361	A54+59	X	
A	A362	A54+72	X	
A	A363	A54+87	X	

NYS OFFICE OF GENERAL SERVICES

Serving New York

ANDREW M. CUOMO
Governor
ROANN M. DESTITO
Commissioner

CONSULTANT

GPI

GREENMAN-PEDERSEN, INC.
CONSULTING ENGINEERS

80 WOLF ROAD, SUITE 300
ALBANY, NY 12205
TEL: (518) 453–9431
FAX: (518) 453–9458
WWW.GPINET.COM

WARNING:

THE ALTERATION OF THIS MATERIAL IN ANY WAY, UNLESS DONE UNDER THE DIRECTION OF A COMPARABLE PROFESSIONAL, I.E. ARCHITECT FOR AN ARCHITECT, ENGINEER FOR AN ENGINEER OR LANDSCAPE ARCHITECT FOR A LANDSCAPE ARCHITECT, IS A VIOLATION OF THE NEW YORK STATE EDUCATION LAW AND/OR REGULATIONS AND IS A CLASS 'A' MISDEMEANOR.

STATE OF NEW YORK · JOHN G. RIZZO · 077511 · LICENSED PROFESSIONAL ENGINEER

CONTRACT:
CONSTRUCTION

TITLE:
REPAIR UNDERGROUND STEAM TUNNELS

LOCATION:
WILLARD DRUG TREATMENT CENTER
7116 COUNTY ROUTE 132
WILLARD, NEW YORK

CLIENT:
DEPARTMENT OF CORRECTIONS AND COMMUNITY SUPERVISION

REVISED DRAWING
2/22/2013

MARK	DATE	DESCRIPTION
1	02/22/2013	ADDENDUM 1
	02/06/2013	BID DOCUMENT

PROJECT NUMBER:	44288–C
DESIGNED BY:	M. BORGEL
DRAWN BY:	F. CUOCCIO
FIELD CHECK:	
APPROVED:	

SHEET TITLE:

STANCHION REPAIR SCHEDULE

DRAWING NUMBER:
S–602