STATE OF NEW YORK
OFFICE OF GENERAL SERVICES
DESIGN AND CONSTRUCTION GROUP
THE GOVERNOR NELSON A. ROCKEFELLER
EMPIRE STATE PLAZA
ALBANY, NY 12242

ADDENDUM NO. 1 TO PROJECT NO. 44491

CONSTRUCTION WORK
REPLACE WINDOWS, A BLOCK BLDG 18 & G BLOCK, BLDG 11
ELMIRA CORRECTIONAL FACILITY
1879 DAVIS STREET, ELMIRA NY

March 21, 2013

NOTE: This Addendum forms a part of the Contract Documents. Insert it in the Project Manual. Acknowledge receipt of this Addendum in the space provided on the Bid Form.

CONSTRUCTION WORK DRAWINGS

1. DRAWING A-601:
   a. Discard Drawing A-601 marked BID DOCUMENT, dated 12/14/2012 and substitute the accompanying Drawing A-601 marked ADDENDUM #1, dated 3/20/2013.

2. DRAWING A-602:
   a. Discard Drawing A-602 marked BID DOCUMENT, dated 12/14/2012 and substitute the accompanying Drawing A-602 marked ADDENDUM #1, dated 3/20/2013.

3. DRAWING A-605:
   a. Discard Drawing A-605 marked BID DOCUMENT, dated 12/14/2012 and substitute the accompanying Drawing A-605 marked ADDENDUM #1, dated 3/20/2013.

END OF ADDENDUM

James Dirolf, P.E.
Director of Design

BUILDING 11 (G-BLOCK), 1ST FLOOR WINDOW SCHEDULE

WINDOW NUMBER	ROOM NAME	TYPE	SIZE WIDTH	SIZE HEIGHT	Head Detail	Sill Detail	Jamb Detail	NOTES
1	1-41	3A	2'-5"	4'-4"	1/A-501	3/A-501	5/A-501	--
2	1-42	3A	2'-5"	4'-4"	1/A-501	3/A-501	5/A-501	--
3	1-2-38	3A	2'-5"	4'-4"	1/A-501	3/A-501	5/A-501	--
4	1-2-37	3A	2'-5"	4'-4"	1/A-501	3/A-501	5/A-501	--
5	1-2-36	3A	2'-5"	4'-4"	1/A-501	3/A-501	5/A-501	--
6	1-2-35	3A	2'-5"	4'-4"	1/A-501	3/A-501	5/A-501	--
7	1-2-34	3A	2'-5"	4'-4"	1/A-501	3/A-501	5/A-501	--
8	1-2-33	3A	2'-5"	4'-4"	1/A-501	3/A-501	5/A-501	--
9	1-2-32	3A	2'-5"	4'-4"	1/A-501	3/A-501	5/A-501	--
10	1-2-31	3A	2'-5"	4'-4"	1/A-501	3/A-501	5/A-501	--
11	1-2-30	3A	2'-5"	4'-4"	1/A-501	3/A-501	5/A-501	--
12	1-2-29	3A	2'-5"	4'-4"	1/A-501	3/A-501	5/A-501	--
13	1-2-28	3A	2'-5"	4'-4"	1/A-501	3/A-501	5/A-501	--
14	1-2-27	3A	2'-5"	4'-4"	1/A-501	3/A-501	5/A-501	--
15	1-2-26	3A	2'-5"	4'-4"	1/A-501	3/A-501	5/A-501	--
16	1-2-25	3A	2'-5"	4'-4"	1/A-501	3/A-501	5/A-501	--
17	1-2-24	3A	2'-5"	4'-4"	1/A-501	3/A-501	5/A-501	--
18	1-2-23	3A	2'-5"	4'-4"	1/A-501	3/A-501	5/A-501	--
19	1-2-22	3A	2'-5"	4'-4"	1/A-501	3/A-501	5/A-501	--
20	1-2-21	3A	2'-5"	4'-4"	1/A-501	3/A-501	5/A-501	--
21	1-2-20	3A	2'-5"	4'-4"	1/A-501	3/A-501	5/A-501	--
22	1-2-19	3A	2'-5"	4'-4"	1/A-501	3/A-501	5/A-501	--
23	1-2-18	3A	2'-5"	4'-4"	1/A-501	3/A-501	5/A-501	--
24	1-2-17	3A	2'-5"	4'-4"	1/A-501	3/A-501	5/A-501	--
25	1-2-16	3A	2'-5"	4'-4"	1/A-501	3/A-501	5/A-501	--
26	1-2-15	3A	2'-5"	4'-4"	1/A-501	3/A-501	5/A-501	--
27	1-2-14	3A	2'-5"	4'-4"	1/A-501	3/A-501	5/A-501	--
28	1-2-13	3A	2'-5"	4'-4"	1/A-501	3/A-501	5/A-501	--
29	1-2-12	3A	2'-5"	4'-4"	1/A-501	3/A-501	5/A-501	--
30	1-2-11	3A	2'-5"	4'-4"	1/A-501	3/A-501	5/A-501	--
31	1-2-10	3A	2'-5"	4'-4"	1/A-501	3/A-501	5/A-501	--
32	1-2-9	3A	2'-5"	4'-4"	1/A-501	3/A-501	5/A-501	--
33	1-2-8	3A	2'-5"	4'-4"	1/A-501	3/A-501	5/A-501	--
34	1-2-7	3A	2'-5"	4'-4"	1/A-501	3/A-501	5/A-501	--
35	1-2-6	3A	2'-5"	4'-4"	1/A-501	3/A-501	5/A-501	--
36	1-2-5	3A	2'-5"	4'-4"	1/A-501	3/A-501	5/A-501	--
37	1-2-4	3A	2'-5"	4'-4"	1/A-501	3/A-501	5/A-501	--
38	1-2-3	3A	2'-5"	4'-4"	1/A-501	3/A-501	5/A-501	--
39	1-2-2	3A	2'-5"	4'-4"	1/A-501	3/A-501	5/A-501	--
40	1-2-1	3A	2'-5"	4'-4"	1/A-501	3/A-501	5/A-501	--
41	1-1-1	3A	2'-5"	4'-4"	1/A-501	3/A-501	5/A-501	--
42	1-1-2	3A	2'-5"	4'-4"	1/A-501	3/A-501	5/A-501	--
43	1-1-3	3A	2'-5"	4'-4"	1/A-501	3/A-501	5/A-501	--
44	1-1-4	3A	2'-5"	4'-4"	1/A-501	3/A-501	5/A-501	--
45	1-1-5	3A	2'-5"	4'-4"	1/A-501	3/A-501	5/A-501	--
46	1-1-6	3A	2'-5"	4'-4"	1/A-501	3/A-501	5/A-501	--
47	1-1-7	3A	2'-5"	4'-4"	1/A-501	3/A-501	5/A-501	--
48	1-1-8	3A	2'-5"	4'-4"	1/A-501	3/A-501	5/A-501	--
49	1-1-9	3A	2'-5"	4'-4"	1/A-501	3/A-501	5/A-501	--
50	1-1-10	3A	2'-5"	4'-4"	1/A-501	3/A-501	5/A-501	--
51	1-1-11	3A	2'-5"	4'-4"	1/A-501	3/A-501	5/A-501	--
52	1-1-12	3A	2'-5"	4'-4"	1/A-501	3/A-501	5/A-501	--
53	1-1-13	3A	2'-5"	4'-4"	1/A-501	3/A-501	5/A-501	--
54	1-1-14	3A	2'-5"	4'-4"	1/A-501	3/A-501	5/A-501	--
55	1-1-15	3A	2'-5"	4'-4"	1/A-501	3/A-501	5/A-501	--
56	1-1-16	3A	2'-5"	4'-4"	1/A-501	3/A-501	5/A-501	--
57	1-1-17	3A	2'-5"	4'-4"	1/A-501	3/A-501	5/A-501	--
58	1-1-18	3A	2'-5"	4'-4"	1/A-501	3/A-501	5/A-501	--
59	1-1-19	3A	2'-5"	4'-4"	1/A-501	3/A-501	5/A-501	--
60	1-1-20	3A	2'-5"	4'-4"	1/A-501	3/A-501	5/A-501	--
61	1-1-21	3A	2'-5"	4'-4"	1/A-501	3/A-501	5/A-501	--
62	1-1-22	3A	2'-5"	4'-4"	1/A-501	3/A-501	5/A-501	--
63	1-1-23	3A	2'-5"	4'-4"	1/A-501	3/A-501	5/A-501	--
64	1-1-24	3A	2'-5"	4'-4"	1/A-501	3/A-501	5/A-501	--
65	1-1-25	3A	2'-5"	4'-4"	1/A-501	3/A-501	5/A-501	--
66	1-1-26	3A	2'-5"	4'-4"	1/A-501	3/A-501	5/A-501	--
67	1-1-27	3A	2'-5"	4'-4"	1/A-501	3/A-501	5/A-501	--
68	1-1-28	3A	2'-5"	4'-4"	1/A-501	3/A-501	5/A-501	--
69	1-1-29	3A	2'-5"	4'-4"	1/A-501	3/A-501	5/A-501	--
70	1-1-30	3A	2'-5"	4'-4"	1/A-501	3/A-501	5/A-501	--
71	1-1-31	3A	2'-5"	4'-4"	1/A-501	3/A-501	5/A-501	--
72	1-1-32	3A	2'-5"	4'-4"	1/A-501	3/A-501	5/A-501	--
73	1-1-33	3A	2'-5"	4'-4"	1/A-501	3/A-501	5/A-501	--
74	1-1-34	3A	2'-5"	4'-4"	1/A-501	3/A-501	5/A-501	--
75	1-1-35	3A	2'-5"	4'-4"	1/A-501	3/A-501	5/A-501	--
76	1-1-36	3A	2'-5"	4'-4"	1/A-501	3/A-501	5/A-501	--
77	1-1-37	3A	2'-5"	4'-4"	1/A-501	3/A-501	5/A-501	--
78	1-1-38	3A	2'-5"	4'-4"	1/A-501	3/A-501	5/A-501	--
79	1-1-38	3A	2'-5"	4'-4"	1/A-501	3/A-501	5/A-501	--
80	1-43	3A	1'-9"	4'-8"	1/A-501	3/A-501	5/A-501	--
81	1-41	3A	1'-9"	4'-8"	1/A-501	3/A-501	5/A-501	--

BUILDING 11 (G-BLOCK), 2ND FLOOR WINDOW SCHEDULE

WINDOW NUMBER	ROOM NAME	TYPE	SIZE WIDTH	SIZE HEIGHT	Head Detail	Sill Detail	Jamb Detail	NOTES
1	2-3-1	3A	2'-5"	4'-4"	1/A-501	3/A-501	5/A-501	--
2	2-42	3A	2'-5"	4'-4"	1/A-501	3/A-501	5/A-501	--
3	2-4-38	3A	2'-5"	4'-4"	1/A-501	3/A-501	5/A-501	--
4	2-4-37	3A	2'-5"	4'-4"	1/A-501	3/A-501	5/A-501	--
5	2-4-36	3A	2'-5"	4'-4"	1/A-501	3/A-501	5/A-501	--
6	2-4-35	3A	2'-5"	4'-4"	1/A-501	3/A-501	5/A-501	--
7	2-4-34	3A	2'-5"	4'-4"	1/A-501	3/A-501	5/A-501	--
8	2-4-33	3A	2'-5"	4'-4"	1/A-501	3/A-501	5/A-501	--
9	2-4-32	3A	2'-5"	4'-4"	1/A-501	3/A-501	5/A-501	--
10	2-4-31	3A	2'-5"	4'-4"	1/A-501	3/A-501	5/A-501	--
11	2-4-30	3A	2'-5"	4'-4"	1/A-501	3/A-501	5/A-501	--
12	2-4-29	3A	2'-5"	4'-4"	1/A-501	3/A-501	5/A-501	--
13	2-4-28	3A	2'-5"	4'-4"	1/A-501	3/A-501	5/A-501	--
14	2-4-27	3A	2'-5"	4'-4"	1/A-501	3/A-501	5/A-501	--
15	2-4-26	3A	2'-5"	4'-4"	1/A-501	3/A-501	5/A-501	--
16	2-4-25	3A	2'-5"	4'-4"	1/A-501	3/A-501	5/A-501	--
17	2-4-24	3A	2'-5"	4'-4"	1/A-501	3/A-501	5/A-501	--
18	2-4-23	3A	2'-5"	4'-4"	1/A-501	3/A-501	5/A-501	--
19	2-4-22	3A	2'-5"	4'-4"	1/A-501	3/A-501	5/A-501	--
20	2-4-21	3A	2'-5"	4'-4"	1/A-501	3/A-501	5/A-501	--
21	2-4-20	3A	2'-5"	4'-4"	1/A-501	3/A-501	5/A-501	--
22	2-4-19	3A	2'-5"	4'-4"	1/A-501	3/A-501	5/A-501	--
23	2-4-18	3A	2'-5"	4'-4"	1/A-501	3/A-501	5/A-501	--
24	2-4-17	3A	2'-5"	4'-4"	1/A-501	3/A-501	5/A-501	--
25	2-4-16	3A	2'-5"	4'-4"	1/A-501	3/A-501	5/A-501	--
26	2-4-15	3A	2'-5"	4'-4"	1/A-501	3/A-501	5/A-501	--
27	2-4-14	3A	2'-5"	4'-4"	1/A-501	3/A-501	5/A-501	--
28	2-4-13	3A	2'-5"	4'-4"	1/A-501	3/A-501	5/A-501	--
29	2-4-12	3A	2'-5"	4'-4"	1/A-501	3/A-501	5/A-501	--
30	2-4-11	3A	2'-5"	4'-4"	1/A-501	3/A-501	5/A-501	--
31	2-4-10	3A	2'-5"	4'-4"	1/A-501	3/A-501	5/A-501	--
32	2-4-09	3A	2'-5"	4'-4"	1/A-501	3/A-501	5/A-501	--
33	2-4-08	3A	2'-5"	4'-4"	1/A-501	3/A-501	5/A-501	--
34	2-4-07	3A	2'-5"	4'-4"	1/A-501	3/A-501	5/A-501	--
35	2-4-06	3A	2'-5"	4'-4"	1/A-501	3/A-501	5/A-501	--
36	2-4-05	3A	2'-5"	4'-4"	1/A-501	3/A-501	5/A-501	--
37	2-4-04	3A	2'-5"	4'-4"	1/A-501	3/A-501	5/A-501	--
38	2-4-03	3A	2'-5"	4'-4"	1/A-501	3/A-501	5/A-501	--
39	2-4-02	3A	2'-5"	4'-4"	1/A-501	3/A-501	5/A-501	--
40	2-46	3A	2'-5"	4'-4"	1/A-501	3/A-501	5/A-501	--
41	2-4-01	3A	2'-5"	4'-4"	1/A-501	3/A-501	5/A-501	--
42	2-46	3A	2'-5"	4'-4"	1/A-501	3/A-501	5/A-501	--
43	2-3-1	3A	2'-5"	4'-4"	1/A-501	3/A-501	5/A-501	--
44	2-3-1	3A	2'-5"	4'-4"	1/A-501	3/A-501	5/A-501	--
45	2-3-01	3A	2'-5"	4'-4"	1/A-501	3/A-501	5/A-501	--
46	2-3-02	3A	2'-5"	4'-4"	1/A-501	3/A-501	5/A-501	--
47	2-3-03	3A	2'-5"	4'-4"	1/A-501	3/A-501	5/A-501	--
48	2-3-04	3A	2'-5"	4'-4"	1/A-501	3/A-501	5/A-501	--
49	2-3-05	3A	2'-5"	4'-4"	1/A-501	3/A-501	5/A-501	--
50	2-3-06	3A	2'-5"	4'-4"	1/A-501	3/A-501	5/A-501	--
51	2-3-07	3A	2'-5"	4'-4"	1/A-501	3/A-501	5/A-501	--
52	2-3-08	3A	2'-5"	4'-4"	1/A-501	3/A-501	5/A-501	--
53	2-3-09	3A	2'-5"	4'-4"	1/A-501	3/A-501	5/A-501	--
54	2-3-10	3A	2'-5"	4'-4"	1/A-501	3/A-501	5/A-501	--
55	2-3-11	3A	2'-5"	4'-4"	1/A-501	3/A-501	5/A-501	--
56	2-3-12	3A	2'-5"	4'-4"	1/A-501	3/A-501	5/A-501	--
57	2-3-13	3A	2'-5"	4'-4"	1/A-501	3/A-501	5/A-501	--
58	2-3-14	3A	2'-5"	4'-4"	1/A-501	3/A-501	5/A-501	--
59	2-3-15	3A	2'-5"	4'-4"	1/A-501	3/A-501	5/A-501	--
60	2-3-16	3A	2'-5"	4'-4"	1/A-501	3/A-501	5/A-501	--
61	2-3-17	3A	2'-5"	4'-4"	1/A-501	3/A-501	5/A-501	--
62	2-3-18	3A	2'-5"	4'-4"	1/A-501	3/A-501	5/A-501	--
63	2-3-19	3A	2'-5"	4'-4"	1/A-501	3/A-501	5/A-501	--
64	2-3-20	3A	2'-5"	4'-4"	1/A-501	3/A-501	5/A-501	--
65	2-3-21	3A	2'-5"	4'-4"	1/A-501	3/A-501	5/A-501	--
66	2-3-22	3A	2'-5"	4'-4"	1/A-501	3/A-501	5/A-501	--
67	2-3-23	3A	2'-5"	4'-4"	1/A-501	3/A-501	5/A-501	--
68	2-3-24	3A	2'-5"	4'-4"	1/A-501	3/A-501	5/A-501	--
69	2-3-25	3A	2'-5"	4'-4"	1/A-501	3/A-501	5/A-501	--
70	2-3-26	3A	2'-5"	4'-4"	1/A-501	3/A-501	5/A-501	--
71	2-3-27	3A	2'-5"	4'-4"	1/A-501	3/A-501	5/A-501	--
72	2-3-28	3A	2'-5"	4'-4"	1/A-501	3/A-501	5/A-501	--
73	2-3-29	3A	2'-5"	4'-4"	1/A-501	3/A-501	5/A-501	--
74	2-3-30	3A	2'-5"	4'-4"	1/A-501	3/A-501	5/A-501	--
75	2-3-31	3A	2'-5"	4'-4"	1/A-501	3/A-501	5/A-501	--
76	2-3-32	3A	2'-5"	4'-4"	1/A-501	3/A-501	5/A-501	--
77	2-3-33	3A	2'-5"	4'-4"	1/A-501	3/A-501	5/A-501	--
78	2-3-34	3A	2'-5"	4'-4"	1/A-501	3/A-501	5/A-501	--
79	2-3-35	3A	2'-5"	4'-4"	1/A-501	3/A-501	5/A-501	--
80	2-3-36	3A	2'-5"	4'-4"	1/A-501	3/A-501	5/A-501	--
81	2-3-37	3A	2'-5"	4'-4"	1/A-501	3/A-501	5/A-501	--
82	2-3-38	3A	2'-5"	4'-4"	1/A-501	3/A-501	5/A-501	--
83	2-44	3A	2'-5"	4'-4"	1/A-501	3/A-501	5/A-501	--
84	2-43	3A	1'-9"	4'-8"	1/A-501	3/A-501	5/A-501	--
85	2-40	1	7'-4"	4'-9"	7/A-503	4/A-503	5&6/A-503	--
86	2-41	3A	1'-9"	4'-8"	1/A-501	3/A-501	5/A-501	--

GENERAL NOTES

1. CONTRACTOR SHALL FIELD VERIFY ALL DIMENSIONS, QUANTITIES, AND EXISTING CONDITIONS PRIOR TO SUBMITTING SHOP DRAWINGS, ORDERING AND MANUFACTURING OF ANY WINDOWS, AND PRIOR TO THE START OF ANY WORK. NOTIFY THE OGS DIRECTOR'S REPRESENTATIVE OF ANY DISCREPANCIES..
2. ALL DIMENSIONS INDICATED ARE APPROXIMATE MASONRY OPENINGS, TYPICAL.
3. AT ALL TYPE 1 WINDOW ELEVATIONS, EACH WINDOW SECTION REPRESENTS A SINGLE WINDOW UNIT WITHIN THE EXISTING MASONRY OPENING, TYPICAL. SEE WINDOW ELEVATION 1/A-605 & 1/A-606.
4. REFER TO A-600 SERIES FOR WINDOW SCHEDULES AND WINDOW TYPES RELATING TO WINDOW NUMBER SHOWN ON FLOOR PLAN, TYPICAL.
5. SEE DRAWING A-605 FOR WINDOW ELEVATIONS, BUILDING 11 (G BLOCK).
6. SEE DRAWING A-606 FOR WINDOW ELEVATIONS, BUILDING 18 (A BLOCK).

NYS OFFICE OF GENERAL SERVICES
Serving New York
ANDREW M. CUOMO
Governor
ROANN M. DESTITO
Commissioner

CONSULTANT

WARNING:
THE ALTERATION OF THIS MATERIAL IN ANY WAY, UNLESS DONE UNDER THE DIRECTION OF A COMPARABLE PROFESSIONAL, I.E. ARCHITECT FOR AN ARCHITECT, ENGINEER FOR AN ENGINEER OR LANDSCAPE ARCHITECT FOR A LANDSCAPE ARCHITECT, IS A VIOLATION OF THE NEW YORK STATE EDUCATION LAW AND/OR REGULATIONS AND IS A CLASS 'A' MISDEMEANOR.

REGISTERED ARCHITECT · THOMAS JOHN HARRISON · 023892 · STATE OF NEW YORK

CONTRACT: CONSTRUCTION

TITLE: REPLACE WINDOWS: G-BLOCK, BUILDING 11 & A-BLOCK, BUILDING 18

LOCATION: ELMIRA CORRECTIONAL FACILITY, 1879 DAVIS STREET, ELMIRA, NY 14902

CLIENT: NYS DEPT OF CORRECTIONS & COMMUNITY SUPERVISION

MARK	DATE	DESCRIPTION
1 (triangle)	03/20/2013	ADDENDUM #1
	12/14/2012	BID DOCUMENTS

PROJECT NUMBER:	**44491 – C**
DESIGNED BY:	S. GUIRE
DRAWN BY:	OMM
FIELD CHECK:	J. VANN
APPROVED:	T. HARRISON

SHEET TITLE: WINDOW SCHEDULES: BUILDING 11 (G-BLOCK) 1ST & 2ND FLOORS

DRAWING NUMBER: A-601

Mar 20,2013 – 3:10pm
V:\DesignAndConstr\P444xx\44491\CadArch\44491-A601.dwg
36x24 PLOT SHEET

BUILDING 11 (G-BLOCK), 3RD FLOOR WINDOW SCHEDULE

WINDOW NUMBER	ROOM NAME	TYPE	SIZE		Head Detail	Sill Detail	Jamb Detail	NOTES
			WIDTH	HEIGHT				
1	3-41	3A	2'-5"	4'-4"	1/A-501	3/A-501	5/A-501	--
2	3-42	3A	2'-5"	4'-4"	1/A-501	3/A-501	5/A-501	--
3	3-6-38	3A	2'-5"	4'-4"	1/A-501	3/A-501	5/A-501	--
4	3-6-37	3A	2'-5"	4'-4"	1/A-501	3/A-501	5/A-501	--
5	3-6-36	3A	2'-5"	4'-4"	1/A-501	3/A-501	5/A-501	--
6	3-6-35	3A	2'-5"	4'-4"	1/A-501	3/A-501	5/A-501	--
7	3-6-34	3A	2'-5"	4'-4"	1/A-501	3/A-501	5/A-501	--
8	3-6-33	3A	2'-5"	4'-4"	1/A-501	3/A-501	5/A-501	--
9	3-6-32	3A	2'-5"	4'-4"	1/A-501	3/A-501	5/A-501	--
10	3-6-31	3A	2'-5"	4'-4"	1/A-501	3/A-501	5/A-501	--
11	3-6-30	3A	2'-5"	4'-4"	1/A-501	3/A-501	5/A-501	--
12	3-6-29	3A	2'-5"	4'-4"	1/A-501	3/A-501	5/A-501	--
13	3-6-28	3A	2'-5"	4'-4"	1/A-501	3/A-501	5/A-501	--
14	3-6-27	3A	2'-5"	4'-4"	1/A-501	3/A-501	5/A-501	--
15	3-6-26	3A	2'-5"	4'-4"	1/A-501	3/A-501	5/A-501	--
16	3-6-25	3A	2'-5"	4'-4"	1/A-501	3/A-501	5/A-501	--
17	3-6-24	3A	2'-5"	4'-4"	1/A-501	3/A-501	5/A-501	--
18	3-6-23	3A	2'-5"	4'-4"	1/A-501	3/A-501	5/A-501	--
19	3-6-22	3A	2'-5"	4'-4"	1/A-501	3/A-501	5/A-501	--
20	3-6-21	3A	2'-5"	4'-4"	1/A-501	3/A-501	5/A-501	--
21	3-6-20	3A	2'-5"	4'-4"	1/A-501	3/A-501	5/A-501	--
22	3-6-19	3A	2'-5"	4'-4"	1/A-501	3/A-501	5/A-501	--
23	3-6-18	3A	2'-5"	4'-4"	1/A-501	3/A-501	5/A-501	--
24	3-6-17	3A	2'-5"	4'-4"	1/A-501	3/A-501	5/A-501	--
25	3-6-16	3A	2'-5"	4'-4"	1/A-501	3/A-501	5/A-501	--
26	3-6-15	3A	2'-5"	4'-4"	1/A-501	3/A-501	5/A-501	--
27	3-6-14	3A	2'-5"	4'-4"	1/A-501	3/A-501	5/A-501	--
28	3-6-13	3A	2'-5"	4'-4"	1/A-501	3/A-501	5/A-501	--
29	3-6-12	3A	2'-5"	4'-4"	1/A-501	3/A-501	5/A-501	--
30	3-6-11	3A	2'-5"	4'-4"	1/A-501	3/A-501	5/A-501	--
31	3-6-10	3A	2'-5"	4'-4"	1/A-501	3/A-501	5/A-501	--
32	3-6-9	3A	2'-5"	4'-4"	1/A-501	3/A-501	5/A-501	--
33	3-6-8	3A	2'-5"	4'-4"	1/A-501	3/A-501	5/A-501	--
34	3-6-7	3A	2'-5"	4'-4"	1/A-501	3/A-501	5/A-501	--
35	3-6-6	3A	2'-5"	4'-4"	1/A-501	3/A-501	5/A-501	--
36	3-6-5	3A	2'-5"	4'-4"	1/A-501	3/A-501	5/A-501	--
37	3-6-4	3A	2'-5"	4'-4"	1/A-501	3/A-501	5/A-501	--
38	3-6-3	3A	2'-5"	4'-4"	1/A-501	3/A-501	5/A-501	--
39	3-6-2	3A	2'-5"	4'-4"	1/A-501	3/A-501	5/A-501	--
40	3-6-1	3A	2'-5"	4'-4"	1/A-501	3/A-501	5/A-501	--
41	3-46	3A	2'-5"	4'-4"	1/A-501	3/A-501	5/A-501	--
42	3-46	3A	2'-5"	4'-4"	1/A-501	3/A-501	5/A-501	--
43	3-45	3A	2'-5"	4'-4"	1/A-501	3/A-501	5/A-501	--
44	3-45	3A	2'-5"	4'-4"	1/A-501	3/A-501	5/A-501	--
45	3-5-1	3A	2'-5"	4'-4"	1/A-501	3/A-501	5/A-501	--
46	3-5-2	3A	2'-5"	4'-4"	1/A-501	3/A-501	5/A-501	--
47	3-5-3	3A	2'-5"	4'-4"	1/A-501	3/A-501	5/A-501	--
48	3-5-4	3A	2'-5"	4'-4"	1/A-501	3/A-501	5/A-501	--
49	3-5-5	3A	2'-5"	4'-4"	1/A-501	3/A-501	5/A-501	--
50	3-5-6	3A	2'-5"	4'-4"	1/A-501	3/A-501	5/A-501	--
51	3-5-7	3A	2'-5"	4'-4"	1/A-501	3/A-501	5/A-501	--
52	3-5-8	3A	2'-5"	4'-4"	1/A-501	3/A-501	5/A-501	--
53	3-5-9	3A	2'-5"	4'-4"	1/A-501	3/A-501	5/A-501	--
54	3-5-10	3A	2'-5"	4'-4"	1/A-501	3/A-501	5/A-501	--
55	3-5-11	3A	2'-5"	4'-4"	1/A-501	3/A-501	5/A-501	--
56	3-5-12	3A	2'-5"	4'-4"	1/A-501	3/A-501	5/A-501	--
57	3-5-13	3A	2'-5"	4'-4"	1/A-501	3/A-501	5/A-501	--
58	3-5-14	3A	2'-5"	4'-4"	1/A-501	3/A-501	5/A-501	--
59	3-5-15	3A	2'-5"	4'-4"	1/A-501	3/A-501	5/A-501	--
60	3-5-16	3A	2'-5"	4'-4"	1/A-501	3/A-501	5/A-501	--
61	3-5-17	3A	2'-5"	4'-4"	1/A-501	3/A-501	5/A-501	--
62	3-5-18	3A	2'-5"	4'-4"	1/A-501	3/A-501	5/A-501	--
63	3-5-19	3A	2'-5"	4'-4"	1/A-501	3/A-501	5/A-501	--
64	3-5-20	3A	2'-5"	4'-4"	1/A-501	3/A-501	5/A-501	--
65	3-5-21	3A	2'-5"	4'-4"	1/A-501	3/A-501	5/A-501	--
66	3-5-22	3A	2'-5"	4'-4"	1/A-501	3/A-501	5/A-501	--
67	3-5-23	3A	2'-5"	4'-4"	1/A-501	3/A-501	5/A-501	--
68	3-5-24	3A	2'-5"	4'-4"	1/A-501	3/A-501	5/A-501	--
69	3-5-25	3A	2'-5"	4'-4"	1/A-501	3/A-501	5/A-501	--
70	3-5-26	3A	2'-5"	4'-4"	1/A-501	3/A-501	5/A-501	--
71	3-5-27	3A	2'-5"	4'-4"	1/A-501	3/A-501	5/A-501	--
72	3-5-28	3A	2'-5"	4'-4"	1/A-501	3/A-501	5/A-501	--
73	3-5-29	3A	2'-5"	4'-4"	1/A-501	3/A-501	5/A-501	--
74	3-5-30	3A	2'-5"	4'-4"	1/A-501	3/A-501	5/A-501	--
75	3-5-31	3A	2'-5"	4'-4"	1/A-501	3/A-501	5/A-501	--
76	3-5-32	3A	2'-5"	4'-4"	1/A-501	3/A-501	5/A-501	--
77	3-5-33	3A	2'-5"	4'-4"	1/A-501	3/A-501	5/A-501	--
78	3-5-34	3A	2'-5"	4'-4"	1/A-501	3/A-501	5/A-501	--
79	3-5-35	3A	2'-5"	4'-4"	1/A-501	3/A-501	5/A-501	--
80	3-5-36	3A	2'-5"	4'-4"	1/A-501	3/A-501	5/A-501	--
81	3-5-37	3A	2'-5"	4'-4"	1/A-501	3/A-501	5/A-501	--
82	3-5-38	3A	2'-5"	4'-4"	1/A-501	3/A-501	5/A-501	--
83	3-44	3A	2'-5"	4'-4"	1/A-501	3/A-501	5/A-501	--
84	3-43	3A	1'-9"	4'-8"	1/A-501	3/A-501	5/A-501	--
85	3-40	1	7'-4"	6'-6"	7/A-503	4/A-503	5&6/A-503	--
86	3-41	3A	1'-9"	4'-8"	1/A-501	3/A-501	5/A-501	--

BUILDING 11 (G-BLOCK), 4TH FLOOR WINDOW SCHEDULE

WINDOW NUMBER	ROOM NAME	TYPE	SIZE		Head Detail	Sill Detail	Jamb Detail	NOTES
			WIDTH	HEIGHT				
1	4-41	3A	2'-5"	4'-8"	4/A-501	3/A-501	5/A-501	--
2	4-42	3A	2'-5"	4'-8"	4/A-501	3/A-501	5/A-501	--
3	4-8-38	3A	2'-5"	4'-8"	4/A-501	3/A-501	5/A-501	--
4	4-8-37	3A	2'-5"	4'-8"	4/A-501	3/A-501	5/A-501	--
5	4-8-36	3A	2'-5"	4'-8"	4/A-501	3/A-501	5/A-501	--
6	4-8-35	3A	2'-5"	4'-8"	4/A-501	3/A-501	5/A-501	--
7	4-8-34	3A	2'-5"	4'-8"	4/A-501	3/A-501	5/A-501	--
8	4-8-33	3A	2'-5"	4'-8"	4/A-501	3/A-501	5/A-501	--
9	4-8-32	3A	2'-5"	4'-8"	4/A-501	3/A-501	5/A-501	--
10	4-8-31	3A	2'-5"	4'-8"	4/A-501	3/A-501	5/A-501	--
11	4-8-30	3A	2'-5"	4'-8"	4/A-501	3/A-501	5/A-501	--
12	4-8-29	3A	2'-5"	4'-8"	4/A-501	3/A-501	5/A-501	--
13	4-8-28	3A	2'-5"	4'-8"	4/A-501	3/A-501	5/A-501	--
14	4-8-27	3A	2'-5"	4'-8"	4/A-501	3/A-501	5/A-501	--
15	4-8-26	3A	2'-5"	4'-8"	4/A-501	3/A-501	5/A-501	--
16	4-8-25	3A	2'-5"	4'-8"	4/A-501	3/A-501	5/A-501	--
17	4-8-24	3A	2'-5"	4'-8"	4/A-501	3/A-501	5/A-501	--
18	4-8-23	3A	2'-5"	4'-8"	4/A-501	3/A-501	5/A-501	--
19	4-8-22	3A	2'-5"	4'-8"	4/A-501	3/A-501	5/A-501	--
20	4-8-21	3A	2'-5"	4'-8"	4/A-501	3/A-501	5/A-501	--
21	4-8-20	3A	2'-5"	4'-8"	4/A-501	3/A-501	5/A-501	--
22	4-8-19	3A	2'-5"	4'-8"	4/A-501	3/A-501	5/A-501	--
23	4-8-18	3A	2'-5"	4'-8"	4/A-501	3/A-501	5/A-501	--
24	4-8-17	3A	2'-5"	4'-8"	4/A-501	3/A-501	5/A-501	--
25	4-8-16	3A	2'-5"	4'-8"	4/A-501	3/A-501	5/A-501	--
26	4-8-15	3A	2'-5"	4'-8"	4/A-501	3/A-501	5/A-501	--
27	4-8-14	3A	2'-5"	4'-8"	4/A-501	3/A-501	5/A-501	--
28	4-8-13	3A	2'-5"	4'-8"	4/A-501	3/A-501	5/A-501	--
29	4-8-12	3A	2'-5"	4'-8"	4/A-501	3/A-501	5/A-501	--
30	4-8-11	3A	2'-5"	4'-8"	4/A-501	3/A-501	5/A-501	--
31	4-8-10	3A	2'-5"	4'-8"	4/A-501	3/A-501	5/A-501	--
32	4-8-9	3A	2'-5"	4'-8"	4/A-501	3/A-501	5/A-501	--
33	4-8-8	3A	2'-5"	4'-8"	4/A-501	3/A-501	5/A-501	--
34	4-8-7	3A	2'-5"	4'-8"	4/A-501	3/A-501	5/A-501	--
35	4-8-6	3A	2'-5"	4'-8"	4/A-501	3/A-501	5/A-501	--
36	4-8-5	3A	2'-5"	4'-8"	4/A-501	3/A-501	5/A-501	--
37	4-8-4	3A	2'-5"	4'-8"	4/A-501	3/A-501	5/A-501	--
38	4-8-3	3A	2'-5"	4'-8"	4/A-501	3/A-501	5/A-501	--
39	4-8-2	3A	2'-5"	4'-8"	4/A-501	3/A-501	5/A-501	--
40	4-8-1	3A	2'-5"	4'-8"	4/A-501	3/A-501	5/A-501	--
41	4-46	3A	2'-5"	4'-8"	4/A-501	3/A-501	5/A-501	--
42	4-46	3A	2'-5"	4'-8"	4/A-501	3/A-501	5/A-501	--
43	4-45	3A	2'-5"	4'-8"	4/A-501	3/A-501	5/A-501	--
44	4-45	3A	2'-5"	4'-8"	4/A-501	3/A-501	5/A-501	--
45	4-7-1	3A	2'-5"	4'-8"	4/A-501	3/A-501	5/A-501	--
46	4-7-2	3A	2'-5"	4'-8"	4/A-501	3/A-501	5/A-501	--
47	4-7-3	3A	2'-5"	4'-8"	4/A-501	3/A-501	5/A-501	--
48	4-7-4	3A	2'-5"	4'-8"	4/A-501	3/A-501	5/A-501	--
49	4-7-5	3A	2'-5"	4'-8"	4/A-501	3/A-501	5/A-501	--
50	4-7-6	3A	2'-5"	4'-8"	4/A-501	3/A-501	5/A-501	--
51	4-7-7	3A	2'-5"	4'-8"	4/A-501	3/A-501	5/A-501	--
52	4-7-8	3A	2'-5"	4'-8"	4/A-501	3/A-501	5/A-501	--
53	4-7-9	3A	2'-5"	4'-8"	4/A-501	3/A-501	5/A-501	--
54	4-7-10	3A	2'-5"	4'-8"	4/A-501	3/A-501	5/A-501	--
55	4-7-11	3A	2'-5"	4'-8"	4/A-501	3/A-501	5/A-501	--
56	4-7-12	3A	2'-5"	4'-8"	4/A-501	3/A-501	5/A-501	--
57	4-7-13	3A	2'-5"	4'-8"	4/A-501	3/A-501	5/A-501	--
58	4-7-14	3A	2'-5"	4'-8"	4/A-501	3/A-501	5/A-501	--
59	4-7-15	3A	2'-5"	4'-8"	4/A-501	3/A-501	5/A-501	--
60	4-7-16	3A	2'-5"	4'-8"	4/A-501	3/A-501	5/A-501	--
61	4-7-17	3A	2'-5"	4'-8"	4/A-501	3/A-501	5/A-501	--
62	4-7-18	3A	2'-5"	4'-8"	4/A-501	3/A-501	5/A-501	--
63	4-7-19	3A	2'-5"	4'-8"	4/A-501	3/A-501	5/A-501	--
64	4-7-20	3A	2'-5"	4'-8"	4/A-501	3/A-501	5/A-501	--
65	4-7-21	3A	2'-5"	4'-8"	4/A-501	3/A-501	5/A-501	--
66	4-7-22	3A	2'-5"	4'-8"	4/A-501	3/A-501	5/A-501	--
67	4-7-23	3A	2'-5"	4'-8"	4/A-501	3/A-501	5/A-501	--
68	4-7-24	3A	2'-5"	4'-8"	4/A-501	3/A-501	5/A-501	--
69	4-7-25	3A	2'-5"	4'-8"	4/A-501	3/A-501	5/A-501	--
70	4-7-26	3A	2'-5"	4'-8"	4/A-501	3/A-501	5/A-501	--
71	4-7-27	3A	2'-5"	4'-8"	4/A-501	3/A-501	5/A-501	--
72	4-7-28	3A	2'-5"	4'-8"	4/A-501	3/A-501	5/A-501	--
73	4-7-29	3A	2'-5"	4'-8"	4/A-501	3/A-501	5/A-501	--
74	4-7-30	3A	2'-5"	4'-8"	4/A-501	3/A-501	5/A-501	--
75	4-7-31	3A	2'-5"	4'-8"	4/A-501	3/A-501	5/A-501	--
76	4-7-32	3A	2'-5"	4'-8"	4/A-501	3/A-501	5/A-501	--
77	4-7-33	3A	2'-5"	4'-8"	4/A-501	3/A-501	5/A-501	--
78	4-7-34	3A	2'-5"	4'-8"	4/A-501	3/A-501	5/A-501	--
79	4-7-35	3A	2'-5"	4'-8"	4/A-501	3/A-501	5/A-501	--
80	4-7-36	3A	2'-5"	4'-8"	4/A-501	3/A-501	5/A-501	--
81	4-7-37	3A	2'-5"	4'-8"	4/A-501	3/A-501	5/A-501	--
82	4-7-38	3A	2'-5"	4'-8"	4/A-501	3/A-501	5/A-501	--
83	4-44	3A	2'-5"	4'-8"	4/A-501	3/A-501	5/A-501	--
84	4-43	3A	1'-9"	4'-11"	4/A-501	3/A-501	5/A-501	--
85	4-40	1	7'-4"	8'-10"	7/A-503	4/A-503	5&6/A-503	--
86	4-41	3A	1'-9"	4'-11"	4/A-501	3/A-501	5/A-501	--

GENERAL NOTES

1. CONTRACTOR SHALL FIELD VERIFY ALL DIMENSIONS, QUANTITIES, AND EXISTING CONDITIONS PRIOR TO SUBMITTING SHOP DRAWINGS, ORDERING AND MANUFACTURING OF ANY WINDOWS, AND PRIOR TO THE START OF ANY WORK. NOTIFY THE OGS DIRECTOR'S REPRESENTATIVE OF ANY DISCREPANCIES..
2. ALL DIMENSIONS INDICATED ARE APPROXIMATE MASONRY OPENINGS, TYPICAL.
3. AT ALL TYPE 1 WINDOW ELEVATIONS, EACH WINDOW SECTION REPRESENTS A SINGLE WINDOW UNIT WITHIN THE EXISTING MASONRY OPENING, TYPICAL. SEE WINDOW ELEVATION 1/A-605 & 1/A-606.
4. REFER TO A-600 SERIES FOR WINDOW SCHEDULES AND WINDOW TYPES RELATING TO WINDOW NUMBER SHOWN ON FLOOR PLAN, TYPICAL.
5. SEE DRAWING A-605 FOR WINDOW ELEVATIONS, BUILDING 11 (G BLOCK).
6. SEE DRAWING A-606 FOR WINDOW ELEVATIONS, BUILDING 18 (A BLOCK).

NYS OFFICE OF GENERAL SERVICES

Serving New York

ANDREW M. CUOMO
Governor
ROANN M. DESTITO
Commissioner

CONSULTANT

WARNING:
THE ALTERATION OF THIS MATERIAL IN ANY WAY, UNLESS DONE UNDER THE DIRECTION OF A COMPARABLE PROFESSIONAL, I.E. ARCHITECT FOR AN ARCHITECT, ENGINEER FOR AN ENGINEER OR LANDSCAPE ARCHITECT FOR A LANDSCAPE ARCHITECT, IS A VIOLATION OF THE NEW YORK STATE EDUCATION LAW AND/OR REGULATIONS AND IS A CLASS 'A' MISDEMEANOR.

REGISTERED ARCHITECT
THOMAS JOHN HARRISON
023892
STATE OF NEW YORK

CONTRACT: CONSTRUCTION

TITLE: REPLACE WINDOWS: G-BLOCK, BUILDING 11 & A-BLOCK, BUILDING 18

LOCATION: ELMIRA CORRECTIONAL FACILITY
1879 DAVIS STREET
ELMIRA, NY 14902

CLIENT: NYS DEPT OF CORRECTIONS & COMMUNITY SUPERVISION

MARK	DATE	DESCRIPTION
1	03/20/2013	ADDENDUM #1
	12/14/2012	BID DOCUMENTS

PROJECT NUMBER:	**44491 – C**
DESIGNED BY:	S. GUIRE
DRAWN BY:	OMM
FIELD CHECK:	J. VANN
APPROVED:	T. HARRISON

SHEET TITLE: WINDOW SCHEDULES: BUILDING 11 (G-BLOCK) 3RD & 4TH FLOORS

DRAWING NUMBER: A-602

Mar 20,2013 – 3:12pm
V:\DesignAndConstr\P444xx\44491\CadArch\44491-A602.dwg
36x24 PLOT SHEET

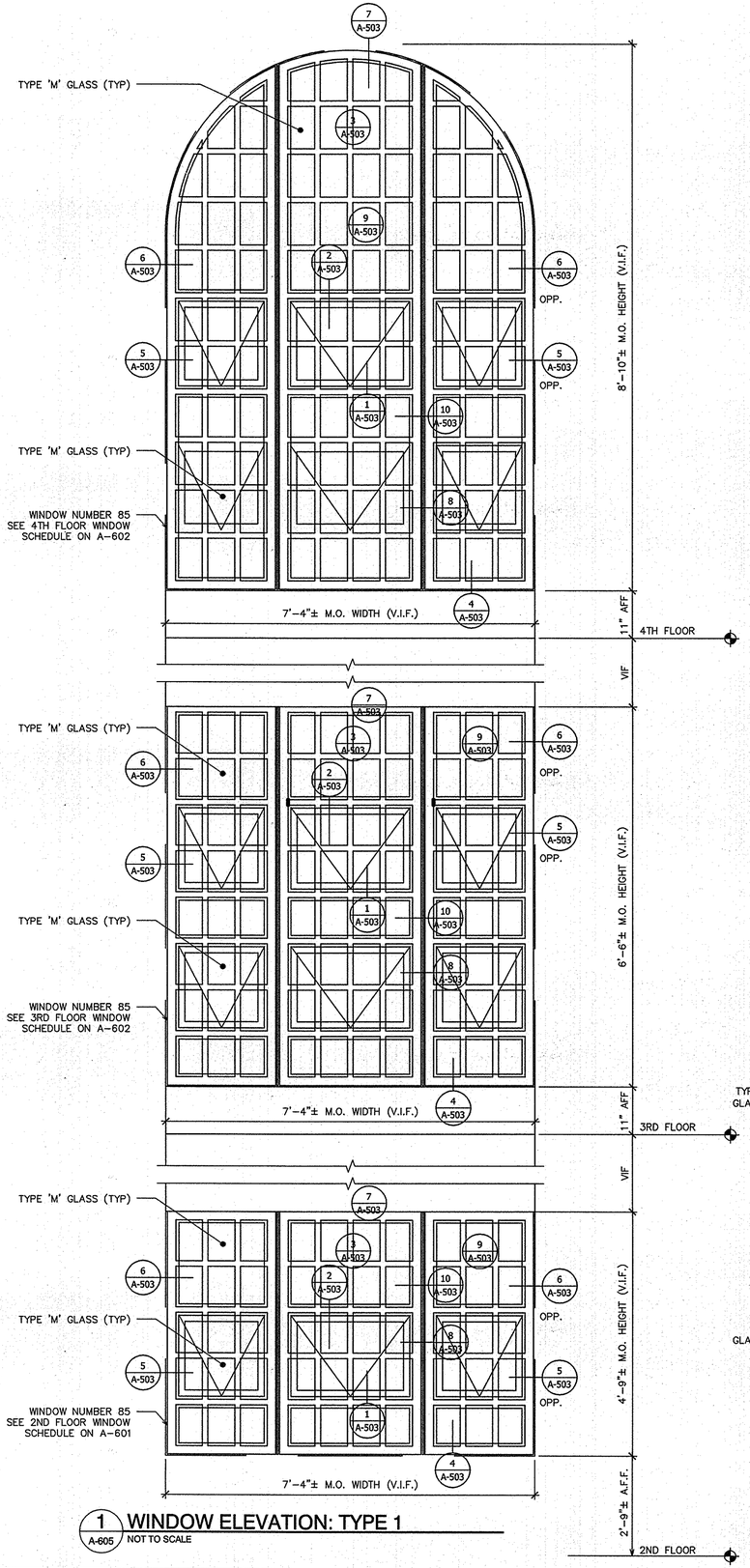

1 A-605 WINDOW ELEVATION: TYPE 1
NOT TO SCALE

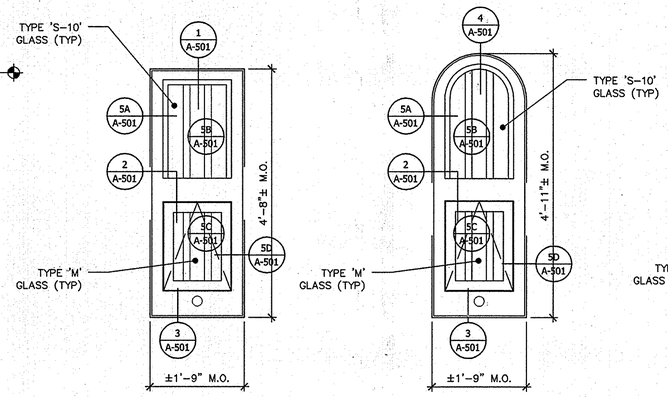

2 A-605 WINDOW ELEVATIONS: TYPE 3A (WEST)
SCALE: 3/4" = 1'-0"

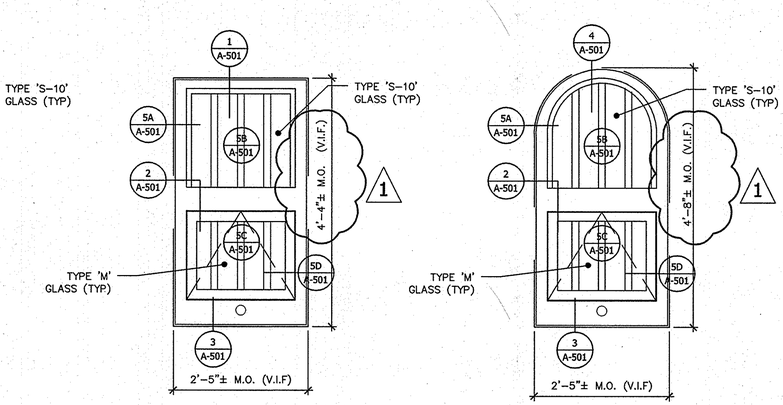

3 A-605 WINDOW ELEVATIONS: TYPE 3A (NORTH & SOUTH)
SCALE: 3/4" = 1'-0"

GENERAL NOTES

1. ALL DIMENSIONS, QUANTITIES, AND EXISTING CONDITIONS TO BE FIELD VERIFIED PRIOR TO THE START OF ANY WORK. NOTIFY THE OGS DIRECTOR'S REPRESENTATIVE OF ANY DISCREPANCIES BETWEEN DOCUMENTS AND EXISTING CONDITIONS.
2. ALL DIMENSIONS INDICATED ARE APPROXIMATE MASONRY OPENINGS, TYPICAL.
3. AT ALL ELEVATIONS, DEPICTION OF WINDOW ELEVATION REPRESENTS ONE WINDOW UNIT WITHIN THE EXISTING MASONRY OPENING, TYPICAL.
4. REFER TO A-600 SERIES FOR WINDOW TYPES RELATING TO WINDOW NUMBER SHOWN ON FLOOR PLAN, TYPICAL.
5. REPLACEMENT WINDOWS TO BE FACTORY FINISHED IN COLOR AS SELECTED BY THE FACILITY THROUGH THE OGS DIRECTOR'S REPRESENTATIVE.
6. PAINT ALL REPAIRED WALLS AND OTHER PATCHED AREAS ADJACENT TO WINDOWS w/ TYPE 'IAL-3' FINISH SYSTEM. COLOR TO BE SELECTED BY THE FACILITY THROUGH THE OGS DIRECTOR'S REPRESENTATIVE FROM THE PAINT MANUFACTURER'S STANDARD COLORS.
7. SEE EXISTING SITE PHOTOS ON A-900 SERIES.

DETAIL NOTES

1. SEE TYPE 3A WINDOW DETAILS ON A-501.
2. SEE TYPE 1 WINDOW DETAILS ON A-503.

OGS
NYS OFFICE OF GENERAL SERVICES
Serving New York

ANDREW M. CUOMO
Governor
ROANN M. DESTITO
Commissioner

CONSULTANT

WARNING:
THE ALTERATION OF THIS MATERIAL IN ANY WAY, UNLESS DONE UNDER THE DIRECTION OF A COMPARABLE PROFESSIONAL, I.E. ARCHITECT FOR AN ARCHITECT, ENGINEER FOR AN ENGINEER OR LANDSCAPE ARCHITECT FOR A LANDSCAPE ARCHITECT, IS A VIOLATION OF THE NEW YORK STATE EDUCATION LAW AND/OR REGULATIONS AND IS A CLASS 'A' MISDEMEANOR.

REGISTERED ARCHITECT THOMAS JOHN HARRISON 023892 STATE OF NEW YORK

CONTRACT:
CONSTRUCTION

TITLE:
REPLACE WINDOWS:
G-BLOCK, BUILDING 11
& A-BLOCK, BUILDING 18

LOCATION:
ELMIRA CORRECTIONAL FACILITY
1879 DAVIS STREET
ELMIRA, NY 14902

CLIENT:
NYS DEPT OF CORRECTIONS
& COMMUNITY SUPERVISION

MARK	DATE	DESCRIPTION
1	03/20/2013	ADDENDUM #1
	12/14/2012	BID DOCUMENTS

PROJECT NUMBER:	44491 – C
DESIGNED BY:	S. GUIRE
DRAWN BY:	OMM
FIELD CHECK:	J. VANN
APPROVED:	T. HARRISON

SHEET TITLE:
WINDOW TYPES
BUILDING 11 (G-BLOCK)

DRAWING NUMBER:
A-605

SHEET 25 OF 33

Mar 20,2013 – 3:13pm
V:\DesignAndConstr\P44xx\44491\CadArch\44491-A605.dwg
36x24 PLOT SHEET