STATE OF NEW YORK
OFFICE OF GENERAL SERVICES
DESIGN AND CONSTRUCTION GROUP
THE GOVERNOR NELSON A. ROCKEFELLER
EMPIRE STATE PLAZA
ALBANY, NY 12242

ADDENDUM NO. 8 TO PROJECT NO. 44578

CONSTRUCTION WORK - PLA
MAJOR BUILDING RENOVATIONS FOR THE
MANHATTAN FORENSIC
RELOCATION
MANHATTAN PSYCHIATRIC CENTER
600 EAST 125th STREET
WARDS ISLAND, NY 10035

September 29, 2015

NOTE: This Addendum forms a part of the Contract Documents. Insert it in the Project Manual. Acknowledge receipt of this Addendum in the space provided on the Bid Form.

CHANGES TO ADDENDUM NO. 6

1. Item Nos. 20, 21, 22, 23, 24, 25, 26, and 27: Delete the words "PART C" from the first line.

DIVISION 0 SECTIONS

2. DOCUMENT 003113 PRELIMINARY PROJECT SCHEDULE: Discard the Document bound in the Project Manual and substitute the attached Document (pages 003113-1 thru 003113-4) noted "REVISED 09/24/2015".

3. DOCUMENT 007305 SUPPLEMENTARY CONDITIONS – LIQUIDATED DAMAGES: Discard the Document bound in the Project Manual and substitute the attached Document (page 007305-1) noted "REVISED 09/24/2015".

DIVISION 1 SECTIONS

4. Page 011000-16, Paragraph 1.03 A.: Change "1166" calendar days to read "1196".

5. Page 013350-7, Paragraph 1.03 D.: Delete this Paragraph in its entirety and replace with the following:
   "D. Full time access will to Construction Model will be provided to the Contractor, the Project Manager, CM staff, and A/E representatives. Within 30 days of Notice of Award, a secure, managed, internet-accessible collaboration website will be established:
      1. BIM 360 Glue will be used for model management by OGS, the CM and the Owners Representative. The Owner's Representative will buy one license to BIM 360Glue. The Contractor will upload the latest progress LOD 400 Construction Models to the BIM 360 Glue site every week.
      2. User accounts will be provided for the General Contractor, the Project Manager and staff, CM staff,A/Erepresentatives and other appropriate users, as requested by the Director's Representative.

3. User accounts and folders/workspaces will be made available where each organization producing Construction Models can upload the Construction Model files for Coordination.
4. Automated versioning of files and maintenance of previous versions will be provided.

6. Page 015301-1, Paragraph 1.02 A.: Delete this Paragraph in its entirety and replace with the following:

"A. A Temporary Hoist, Common Platform and Loading Dock (referred to as "Hoist") as described herein will be provided by the Owner and operated by the contractor. See Hoist Plans. There will be another contractor - Contract #44579 (referred to as Package #1) on site using the Hoist during a portion of the time that the contractor for Contract #44578 - Package #2 (referred to as "Contractor") is on-site. From Notice of Award (N.O.A.) for Contract #44578 - Package #2 until March 8, 2016 (Substantial Completion of Package #1), both contractors will share equal use and operation of the Hoist (Duel Use). This Contractor shall accommodate and provide personnel as needed for use of the Hoist by the Package #1 Contractor for the period of time from March 8, 2016 to June 6, 2016 (Physical Completion of Package #1). During the time of Duel Use, each contractor will supply one operator and have control of one car. During times that one contractor is not using either Temporary Hoist car; the other contractor may have use of both cars for materials and personnel. Moving of either contractor's personnel shall not be limited to specific cars or operators. If any disputes arise between the contractors regarding operation or usage of the hoists, the Director's Representative will issue a decision to resolve the dispute. This decision is to be followed by the contractors. No claims for additional costs due to such decisions will be entertained by the state. Upon Substantial Completion of Package #1, this Contractor shall have control of both hoist cars and be solely responsible to provide the hoist operator(s)."

ARCHITECTURAL SPECIFICATIONS

7. SECTION 035400, CEMENTITIOUS SELF-LEVELING TOPPING (Revised Section dated 8/12/2015):
   a. Page 035400-1, Paragraph 1.01 A.: Add the following Subparagraph:
      "5. A more stringent level tolerance is required for Mobile Storage Shelving locations. Leveled substrates for Mobile Storage Shelving shall achieve a minimum level tolerance of 1/16" in 10'-0", non-cumulative. Coordinate requirements with Mobile Storage Shelving manufacturer".
   b. Page 035400-1, ARTICLE 1.01 DESCRIPTION: Delete Paragraphs D, E and I in their entirety.
   c. Page 035400-2, Paragraph 1.02 C and D..: Delete these Paragraphs in their entirety and replace with the following:
      "C. Resilient Sheet Flooring (including moisture and alkalinity testing): Section 096516.
      D. Resilient Tile Flooring (including moisture and alkalinity testing): Section 096519".
   d. Page 035400-4, Paragraph 1.09 A.: Delete this Paragraph in its entirety and replace with the following:
      "A. Provide a minimum of 18, field applied, 5' x 5' x contract thickness samples of topping over each "old" flooring substrate known to exist in the building, and elsewhere as required by the Architect and Director's Representative; including but not limited to:
         1. Old concrete.

2. New concrete (with curing compound per Phase 1 Project 44579 contract requirements).
3. Old Terrazzo.
4. Old "Dex-O-Tex" finish on concrete.'"

e. Page 035400-5, Paragraph 2.01 C.: Delete this paragraph in its entirety.
f. Page 035400-6, Paragraph 3.04 B.: Delete this Paragraph in its entirety.
g. Page 035400-6, Paragraph 3.05 C.: Delete 'this Paragraph in its entirety.

8. SECTION 051200 STRUCTURAL STEEL: Add the Attached Section (pages 052100-1 thru 052100-14) to the Project Manual.

9. SECTION 055100 METAL STAIRS:
   a. Page 055100-6, Paragraph 2.03 E.: Delete this Paragraph in its entirety.
   b. Part 3 EXECUTION, 3.01 INSTALLATION: Add the following Paragraph:
      "G. Install abrasive nosings in accordance with manufacturer's recommendations Place concrete in the steel pans, as quickly as possible, schedule pours so as to install the safety nosings quickly before initial set of concrete occurs. Puddle the concrete, tamping the safety nosing to ensure proper concrete formation around the anchors. Permit no use of stair for a minimum of 24 hours.

10. Page 064000-5, ARTICLE 2.02 FABRICATION - GENERAL: Add the following Paragraph:

"E. Properly size routing of wood stair treads and install scheduled, ribbed, rubber-strip insert, Roppe Safety Yellow LL (2" x 1/8") in accordance with best woodwork practices. Allow for expansion and contraction. Manufacturer's recommended adhesive: Roppe 7200 urethane epoxy adhesive, rolled with hand roller. Caulk edges with Pecora, pick-proof, security caulking compound so that edges are not able to be pulled out; translucent or custom colored as selected by Architect. Fabrication and installation, including adhesive and caulking, will be subject to approval of Owner and Director's Representative".

11. Page 072100-1, Paragraph 1.01 A.: Delete the words "fluid applied" from the first line.

12. SECTION 096519 RESILIENT TILE FLOORING (Revised 9/3/2015):
   a. Page 096519-1, Subparagraph 1.01 A.8.: Delete this Subparagraph in its entirety.
   b. Page 096519-1, ARTICLE 1.01 DESCRIPTION: Add the following Paragraph:
      "D. Resilient tread strips routed in wood treads is specified in Section 064000, Architectural Woodwork.
   c. ARTICLE 1.02 RELATED WORK SPECIFIED ELSEWHERE: Delete this Article in its entirety and replace with the following:

"1.02 RELATED WORK SPECIFIED ELSEWHERE

A. Cementitious Self-Leveling Topping: Section 035400.

B. Metal Stairs (including abrasive metal strips for treads): Section 055100.

C. Architectural Woodwork (including resilient strips routed in wood treads): Section 064000.

D. Resilient Sheet Flooring (including Accent Flooring in Corridors and Gymnasium flooring): Section 096516.

E. Tile Carpeting: Section 096813.

F. Resilient Tile Flooring in Elevator Cabs: Section 142711."

d. Page 096519-2: Delete "Samples" after Subparagraph 1.04B.7.
e. Page 096519-2, Paragraph B.: Add "Samples" as paragraph title.
f. Page 096519-4, Paragraph 2.01 A.: Add the words "and VT-7" after the word "VT-6"
g. Page 096519-4, Subparagraph 2.01 A,3.: Delete this Subparagraph in its entirety,
h. Page 096519-5 and 6, Paragraphs G. and H.: Delete these Paragraphs in their entirety and replace with the following:
"G. Rubber Stair Tread Strip - RT-1 for installation in wood stair treads is specified in Section 064000, Architectural Woodwork. where required or as indicated. Metal Pan Abrasive Metal-Strip Nosings - RT-2: Wooster 121BF are specified in Section 055510, Metal Stairs".
i. Page 096519-10, Paragraph 3.03 H.: Delete this Paragraph in its entirety.

13. Section 099101 CONSTRUCTION PAINTING:
a. Page 099101-1, ARTICLE 1.01 DESCRIPTION: Add the following Paragraph:
"D. Provide EP-Series**,** High Performance Epoxy Coatings for mechanical room concrete floors and existing concrete stair treads where required or as indicated. Refer to Finish Schedule."
b. Page 099101-9, ARTICLE 2.04 GAME LINE PAINT PRODUCTS: Change "2.04" to read "2.06'.
c. Page 099101-9, ARTICLE 2.05 MULTICOLOR FINISH SYSTEM: Change "2.05" to "2.07".
d. Page 099101-9, Part 2, PRODUCTS: Add the following Articles:

" **"2.08 HIGH PERFORMANCE EPOXY COATING**
A. Sherwin-Williams High Performance Epoxy Coating

2.09 HIGH PERFORMANCE EPOXY COATINGS

A. EP-1 System consisting of high-solids, two-component epoxy coating and binder resin, in color as selected by the Architect and Director's Representative.
1. Concrete Floors: EP-1, Epoxy Urethane Paint System
a. S-W 3745 Self-Leveling Epoxy
b. S-W 4409 WB Poly-Urethane Satin Topcoat
2. Existing Concrete Treads and elsewhere as required; EP-2 General Polymer Coarse Aggregate Additive
a. S-W 5191 additive broadcast in EP-1 SW 3745 Self Leveling Epoxy, prior to application of EP-2 SW 4409 top coat.

e. Page 099101-14, Subparagraph 3.03 D.2.: Add the words "EP-1" after "Concrete Floors:"

f. Page 099101-14, Subparagraph 3.03 D.2.: Add, the following Subparagraph:

"d. Existing Concrete Stair Treads and elsewhere as indicated or where required: EP-2, General Polymer Coarse Aggregate Additive S-W 5191. Cast in coarse additive after EP-1 SW 3745 Self Leveling Epoxy, and prior to application of EP-2 SW 4409 top coat".

g. Page 099101-16, PART 3, EXECUTION: Add, the following Article:

"**3.07 EPOXY COATING**

A. Apply as recommended by coating manufacturer

B. Tint priming coat and undercoat to the approximate shade of the final coat."

PLUMBING SPECIFICATIONS

14. Page 221100-11, Subparagraph 3.07 B.2.: Delete this Subparagraph in its entirety and replace with the following:

"2. 4 inch and over:

a. Pipe: Ductile iron pipe, double cement lined, ANSI/AWWA C150, C151, AWWA C104, ANSI A21.4, minimum special thickness class 52 or minimum pressure class 250.

b. Fittings: Ductile iron, double cement lined, ANSI/AWWA C110, or C153, AWWA C104/ANSI A21.4, minimum special thickness Class 52 or minimum pressure class 250. Flanged joints."

HVAC SPECIFICATIONS

15. Page 230700-3, Paragraph 2.01 C.: Delete this Paragraph in its entirety.

APPENDIX

16. DOCUMENT BID SCHEDULE: Delete the Bid Schedule bound in the Project Manual (MR02) and substitute the attached Document MR05 (14 full size drawings) noted "REVIDED 09/24/2015".

ARCHITECTURAL DRAWINGS

17. Revised Drawing Nos. (Addendum #5) No.A-100-2A, A-100-2B,A-100-2C,A-100-2 D, A-100-2 E, A-101-2A, A-101-2B, A-101-2C, A-101-2D, A-101-2E, A-102-2B, A-102-2C, A-102-2D, Revised Drawings (issued with Addendum #5) No. A-103-2A, A-103-2B, Revised Drawing (issued with Addendum #6) No A-103-2C, A-103-2D and Revised Drawings (issued with Addendum #6) Nos.A-104-2, A-105-2, A-106-2, Revised Drawing (issued with Addendum #5) Nos. A-107-2, A-108-2, A-109-2, A-110-2 , A-111-2, A-112-2, A-113-2, Revised Drawing (issued with Addendum #6) No. A-114-2, A-115-2 , and A-116-2, GENERAL NOTES, Note 4: Delete this Note in its entirety and replace with the following:

"4. FOR ALL EXTERIOR WALLS TO GET WALL FURRING, SEE DWG NOS. A-801-2, A-802-2 and A-803-2."

18. Revised Drawings(issued with Addenda #5) Nos.A-101-2A, A-101-2B, A-101-2C, A-101-2D, A-101-2E, A-102-2A , A-102-2B, A-102-2C, A-102-2D, A-103-2A, A-103-2B, Revised Drawing (issued with Addendum #6) No.A-103-2C,A-103-2D and Revised Drawing (issued with Addendum #6) No. A-104-2, Revised Drawing (issued with Addendum #6) Nos. A-105-2, Revised Drawing (issued Addendum #5) Nos. A-106-2, A-107-2, A-108-2, A-109-2, A-110-2

,A-111-2, A-112-2, A-113-2, Revised Drawing (issued with Addendum #6) No A-114-2, A-115-2 , and A-116-2 Change Typical Section tag" 8/504-2" to read "7/802-2".

19. Revised Drawing (Addendum #5) No. A-411-2, DETAIL 6: Change the Note, "HARDWOOD TREADS & RISERS W/ ABRASIVE STRIP AND FLOOR COVER TYPE C1" to read "HARDWOOD TREADS & RISERS W/ ROPPE RIBBED RUBBER INSERT OR MANUFACTURER'S EQUIVALENT AND FLOOR COVER TYPE

20. Revised Drawing (issued with Addendum #5) No. A-911-2, DETAIL 6: Change the Note, "HARDWOOD TREADS & RISERS W/ ABRASIVE STRIP AND FLOOR COVER TYPE C1" to read "HARDWOOD TREADS & RISERS W/ ROPPE RIBBED RUBBER INSERT OR MANUFACTURER'S EQUIVALENT AND FLOOR COVER TYPE C1".

21. Drawing No. A-100-2, at column line between 6 & A AND 6 & B, change blocked-up window hatch to match blocked up window hatch in Revised Drawing (issued with Addendum #5) No. A-100-2B

22. Revised Drawing (issued with Addendum #5) Nos. A-100-2A, A-100-2B, A-100-2C, A-100-2D, A-100-2E, A-101-2A, A101-2B, A-101-2C, A-101-2D, A-101-2E, A-102-2A, A-102-2B, A-102-2C, A-102-2D, A-103-2A, A-103-2B, Revised Drawing (issued with Addendum #6) No. A-103-2C, A-103-3D, Revised Drawing (issued with Addendum #6) No. A-104-2, Revised Drawing (issued with Addendum #6) No. A-105-2, Revised Drawing (issued with Addendum #5) Nos. A-106-2, A-107-2, A-108-2, A-109-2, A-110-2, A-111-2, A-112-2, A-113-2, Revised Drawing (issued with Addendum #6) No. A-114-2, A-115-2, AND A-116-2:
    a. GENERAL NOTES: Add the following Notes:
        "11. NEW HOLLOW METAL DOOR FRAMES TO BE PLACED IN AN EXISTING (NON RATED) MASONRY WALL NEEDS TO HAVE A MASONRY LOOSE BUCK.
        12. REMOVE EXISTING FRAME AND INSTALL 3 PIECE KNOCK DOWN FRAME AS PER MANUFACTURES INSTRUCTION TO MEET THE REQUIRED FIRE RATING. SEEE DOOR SCHEDULE FOR RATING OF THE DOOR.
        13. FILL OPEN TRANSOM AND TRANSOM SPACE WITH MASONRY TO MATCH SURROUNDING WALL CONSTRUCTION. SEE A-806-2.
        14. PATCH MISCELLANEOUS SMALL OPENINGS OVER EXISTING WINDOWS WITH MORTAR ."
    b. GENERAL NOTES, Note 4: Delete this Note in its entirety and replace with the following:
        "4. FOR ALL EXTERIOR WALLS TO GET WALL FURRING, SEE DWGS: A-801-2, A-802-2 & A-803-2."

23. Revised Drawing (issued with Addendum #5) No. A-100-2A, AT COLUMN LINE BETWEEN 5.8 & I AND 5.8 & J: Change "3ft-8 inch" wide door No. 005A to read "4ft-0inch"

24. Revised Drawing (issued with Addendum #5) No. A-100-2D, BASEMENT FLOOR PLAN, PART D:
    a. Remove window and block up opening at Column 19 in between Col. line A and B
    b. Change reference details from 2/A-806-2 to 3/A-806-2 located at Column line A and 13A

25. Drawing No. A-100-6, BASEMENT FLOOR PLAN:
    a. Remove reference details tags from Col. lines 11 and 7.
    b. Replace with reference detail tags 15/A-802-2 along Col. lines 11 and 7

26. Revised Drawing (issued with Addendum #5) Nos. A-100-2D and AD-200-2D, AT COLUMN LINE 19 & B, The existing window be demolished and blocked up.

27. Revised Drawing (issued with Addendum #5) No. A-100-2D, BASEMENT FLOOR PLAN, PART D:
    a. Remove window and block up opening at Column 19, in between Col, line A and B.
    b. Change reference details “2/A-806-2” to read 3/A-806-2 located at Column line A and 13A.

28. Revised Drawing (Addendum #5) No. A-100-2E:
    a. Partition from existing to type "G2", located at column line 22, in between H & I
    b. Place tag " G2" at new partition, located at column line 22, in between H & I

29. Revised Drawing (issued with Addendum #5) No. A-100-2E and A-912-2: Change the tag of the door 004B at column 22 & i to read 004b-2, and change the single door to a double egress door.

30. Drawing No. A-101-2A, FIRST FLOOR PLAN, PART A in Laundry Rm 155A:
    a. Change Partition ”B7” located in between Col. line -3K and -2K to read “A3”.
    b. Change Partition type “B6” located at Col. line J to read “A2”.

31. Revised Drawing (issued with Addendum #5) No A-101-2C AT COLUMN LINE BETWEEN 11 & H AND 12 & H: Change the note "INSTALL NEW WINDOW PROVIDED BY THE OWNER IN THIS LOCATION SEE REVISED DWG. A-802" to read "INSTALL NEW WINDOW PROVIDED BY THE OWNER IN THIS LOCATION. SEE REVISED DRAWING DWG. A-802-2 WHICH ACCOMPANIES THIS ADDENDUM.

32. Drawing No. A-102-2B: At column line between 9 & d and 9 & e, change note "CENTER LINE MULLION AND PARTITION" to read "ALIGN WALL W/ WINDOW JAMB TYP."

33. Revised Drawing (issued with Addendum #5) No. Drawing No. A-102-2C: At column line 12 & G, change note "CENTER LINE MULLION AND PARTITION" to read "ALIGN WALL W/ WINDOW JAMB TYP."

34. Revised Drawing (issued with Addendum #5) No. Drawing No. A-102-2C: At column line 11& H, add type “J” divider wall to mechanical shaft as shown on Dwg. A-102-2C.

35. Drawing Nos. A-102-2 and A-102-2A: Revise Room names for 206A and 207A from “Passage“ to “Secure Corridor”.

36. Drawing No. A-102-2A: Add detail tag 1/A-801-2 at column line K between 2 and 3, at column line H between 1 and 2, at column line 6 between N and O, and at column line 10 between N and O.

37. Revised Drawing (issued with Addendum #5) Nos. A-103-2A, A-104-2, A-105-2, A-106-2, A-107-2, A-108-2, A-109-2, A-110-2, A-111-2: Add detail tag 1/A-801-2 at column line H between 1 and 2, at column line H between 2 and 3, at column line K between 2 and 3, and at column line 6 between N and O.

38. Drawing Nos. A-103-2, and Revised Drawing (issued with Addendum #5) No. A-103-2A: Revise Room names for 334A and 347A from “Passage“ to “Secure Corridor”.

39. Drawing No. A-104-2:
    a. Revise Room names for 434A and 447A from “Passage“ to “Secure Corridor”.
    b. Delete detail tag 8/504-2 at column line H between 1 and 2, at column line 10 between N and O, at column line 1 and K, and at column line 6 between M and N.

40. Revised Drawing (issued with Addendum #5) No A-105-2:
    a. Revise Room names for 534A and 547A from “Passage“ to “Secure Corridor”.
    b. Delete detail tag 8/504-2 at column line H between 1 and 2, at column line 10 between N and O, and at column line 1 and K.

41. Revised Drawing (issued with Addendum #5) No A-106-2:
    a. Revise Room names for 634A and 647A from “Passage“ to “Secure Corridor”.
    b. Delete detail tag 8/504-2 at column line H between 1 and 2, at column line 10 between N and O, and at column line 6 between M and N.

42. Revised Drawing (issued with Addendum #5) No. A-107-2:
    a. Revise Room names for 734A and 747A from “Passage“ to “Secure Corridor”.
    b. Delete detail tag 8/504-2 at column line H between 1 and 2, at column line 10 between N and O, and at column line 6 between M and N.

43. Revised Drawing (issued with Addendum #5) No. A-108-2:
    a. Revise Room names for 834A and 847A from “Passage“ to “Secure Corridor”.
    b. Delete detail tag 8/504-2 at column line H between 1 and 2, at column line 10 between N and O, and at column line 6 between M and N.

44. Revised Drawing (Addendum #5) No A-109-2:
    a. Revise Room names for 934A and 947A from “Passage“ to “Secure Corridor”.
    b. Delete detail tag 8/504-2 at column line H between 1 and 2, at column line 10 between N and O, and at column line 6 between M and N.

45. Revised Drawing (issued with Addendum #5) No A-110-2:
    a. Revise Room names for 1034A and 1047A from “Passage“ to “Secure Corridor”.
    b. Delete detail tag 8/504-2 at column line H between 1 and 2, and at column line 10 between N and O.

46. Revised Drawing (issued with Addendum #5) No A-111-2:
    a. Revise Room names for 1134A and 1147A from “Passage“ to “Secure Corridor”.
    b. Delete detail tag 8/504-2 at column line H between 1 and 2, and at column line 10 between N and O.

47. Revised Drawing (issued with Addendum #5) No A-112-2: Revise Room name for 1223A from “Passage“ to “Secure Corridor”.

48. Revised Drawing (issued with Addendum #5) No A-113-2: Revise Room name for 1323 from “Passage“ to “Secure Corridor”.

49. Revised Drawing (issued with Addendum #5) No A-113-2, AT COLUMN LINE BETWEEN 2 & H AND 3 & H, Change the Note, "ALIGN WALL W/ WINDOW JAMB TYP." To read "CENTER LINE MULLION AND PARTITION."

50. Revised Drawing (issued with Addendum #5) No. AD-200-2D, BASEMENT DEMOLITION FLOOR PLAN, PART D: Remove window and block up opening at Column 19 in between Col. line A and B

51. Drawing No. A-206, WINDOW HARDENING: Change the Note located above the Title Block to read:
"Note: FOR WINDOW HARDENING DETAILS SEE DWG. A-804-2.

52. Drawing No. A-803-2, WINDOW AND LOUVER TYPES:
    a. Change W3 window type from 3' x 4'-7" to 3' x 3'.
    b. Delete W5 window type.

53. Drawing No. A-804-2, MISCELLANEOUS WINDOW DETAILS:
    a. Change all detail tags to include the suffix "-2"
    b. In Exterior Security Screen Chart, row M6, column Existing Masonry Opening: Delete "not used" and add replace with the following:
    "9'-4 1/4 in, 5'-2", +/- 10'-4 in, +/- 6'-4 in"

54. Drawing No. A-806-2,
    a. DETAIL NO. 7: Add the following Note:
    "REMOVE EXISTING RAILING AND REINSTALL AFTER WALL HAS BEEN REPAIRED."
    b. MASONRY INFILL AND LOUVER DETAILS: Add suffix "-2" to Drawing Title.

55. Drawing No. A-912-2, Change Door No. 004-B-2 to be type HM, size 64"x84", hardware 16.

56. Drawing No. A-913-2, DOOR SCHEDULE- PLATFORM & FIRST FLOOR: In row No. 155A, add "3/4 Hr." rating to Fire Rating Column.

57. Drawing Nos. AR-103-2C, REFLECTIVE CEILING PLAN, PART C – THIRD FLOOR: Provide Box molding detail tags "7/A903-2" along the perimeter as shown on Drawing No. A-903-2 in Dining Room No. 301B.

58. Drawing Nos. AR-104-2, REFLECTIVE CEILING PLAN – FOURTH FLOOR: Provide Box molding detail tags "7/A903-2" along the perimeter as shown on sheet A-903-2 in Dining Room No. 401B.

59. Drawing Nos. AR-105-2, REFLECTIVE CEILING PLAN – FIFTH FLOOR: Provide Box molding detail tags "7/A903-2" along the perimeter as shown on sheet A-903-2 in Dining Room No. 501B.

60. Revised Drawing (Addendum #6) No. AR-106-2, REFLECTIVE CEILING PLAN – SIXTH FLOOR: Provide Box molding detail tags "7/A903-2" along the perimeter as shown on Drawing No. A-903-2 in Dining Room No. 601B.

61. Drawing Nos. AR-107-2, REFLECTIVE CEILING PLAN – SEVENTH FLOOR: Provide Box molding detail tags "7/A903-2" along the perimeter as shown on sheet A-903-2 in Dining Room No. 701B.

62. Drawing Nos. AR-108-2, REFLECTIVE CEILING PLAN – EIGHTH FLOOR: Provide Box molding detail tags "7/A903-2" along the perimeter as shown on sheet A-903-2 in Dining Room No. 801B.

63. Drawing Nos. AR-109-2, REFLECTIVE CEILING PLAN – NINTH FLOOR: Provide Box molding detail tags "7/A903-2" along the perimeter 7as shown on sheet A-903-2 in Dining Room No. 901B.

64. Drawing Nos. AR-110-2, REFLECTIVE CEILING PLAN – TENTH FLOOR: Provide Box molding detail tags "7/A903-2" along the perimeter as shown on sheet A-903-2 in Dining Room No. 1001B.

65. Drawing Nos. AR-111-2, REFLECTIVE CEILING PLAN – ELEVENTH FLOOR: Provide Box molding detail tags "7/A903-2" along the perimeter as shown on sheet A-903-2 in Dining Room No. 1101B.

66. Drawing Nos. AR-103-2C, REFLECTIVE CEILING PLAN, PART C – THIRD FLOOR: Provide Expansion Joint detail tag "11/A903-2" as shown on sheet A-903-2 on the expansion joint located on column line 17A between H and I in Dining Room No. 301B.

67. Drawing Nos. AR-104-2, REFLECTIVE CEILING PLAN– FOURTH FLOOR: Provide Expansion Joint detail tag "11/A903-2" as shown on sheet A-903-2 on the expansion joint located on column line 17A between H and I in Dining Room No. 401B.

68. Drawing Nos. AR-105-2, REFLECTIVE CEILING PLAN– FIFTH FLOOR: Provide Expansion Joint detail tag "11/A903-2" as shown on sheet A-903-2 on the expansion joint located on column line 17A between H and I in Dining Room No. 501B.

69. Revised Drawing No. (Addendum #6), AR-106-2, REFLECTIVE CEILING PLAN– SIXTH FLOOR: Provide Expansion Joint detail tag "11/A903-2" as shown on Drawing No. A-903-2 on the expansion joint located on column line 17A between H and I in Dining Room No. 601B.

70. Drawing No. AR-107-2, REFLECTIVE CEILING PLAN– SEVENTH FLOOR: Provide Expansion Joint detail tag "11/A903-2" as shown on sheet A-903-2 on the expansion joint located on column line 17A between H and I in Dining Room No. 701B.

71. Drawing Nos. AR-108-2, REFLECTIVE CEILING PLAN– EIGHTH FLOOR: Provide Expansion Joint detail tag "11/A903-2" as shown on sheet A-903-2 on the expansion joint located on column line 17A between H and I in Dining Room No. 801B.

72. Drawing Nos. AR-109-2, REFLECTIVE CEILING PLAN– NINTH FLOOR: Provide Expansion Joint detail tag "11/A903-2" as shown on sheet A-903-2 on the expansion joint located on column line 17A between H and I in Dining Room No. 901B.

73. Drawing Nos. AR-110-2, REFLECTIVE CEILING PLAN– TENTH FLOOR: Provide Expansion Joint detail tag "11/A903-2" as shown on sheet A-903-2 on the expansion joint located on column line 17A between H and I in Dining Room No. 1001B.

74. Drawing Nos. AR-111-2, REFLECTIVE CEILING PLAN–ELEVENTH FLOOR: Provid Expansion Joint detail tag "11/A903-2" as shown on sheet A-903-2 on the expansion joint located on column line 17A between H and I in Dining Room No. 1101B.

75. Drawing No. AF-103-2C, THIRD FLOOR ROOM FINISH PLAN, PART C: Delete Wall Base finish and Wall Paint Finish in Dining Room 301B.

76. Drawing No. AF-104-2, FOURTH FLOOR ROOM FINISH PLAN: Delete Wall Base finish and Wall Paint Finish in Dining Room 401B.

77. Drawing No. AF-105-2, FIFTH FLOOR ROOM FINISH PLAN: Delete Wall Base finish and Wall Paint Finish in Dining Room 501B.

78. Drawing No. AF-106-2, SIXTH FLOOR ROOM FINISH PLAN: Delete Wall Base finish and Wall Paint Finish in Dining Room 601B.

79. Drawing No. AF-107-2, SEVENTH FLOOR ROOM FINISH PLAN: Delete Wall Base finish and Wall Paint Finish in Dining Room 701B.

80. Drawing No. AF-108-2, EIGHTH FLOOR ROOM FINISH PLAN: Delete Wall Base finish and Wall Paint Finish in Dining Room 801B.

81. Drawing No. AF-109-2, NINTH FLOOR ROOM FINISH PLAN: Delete Wall Base finish and Wall Paint Finish in Dining Room 901B.

82. Drawing No. AF-110-2, TENTH FLOOR ROOM FINISH PLAN: Delete Wall Base finish and Wall Paint Finish in Dining Room 1001B.

83. Drawing No. AF-111-2, ELEVENTH FLOOR ROOM FINISH PLAN: Delete Wall Base finish and Wall Paint Finish in Dining Room 1101B.

84. Drawing No. AF-103-2S, THIRD FLOOR ROOM FINISH SCHEDULE: Delete Wall Base finish and Wall Paint Finish in Dining Room 301B.

85. Drawing No. AF-104-2S, FOURTH FLOOR ROOM FINISH SCHEDULE: Delete Wall Base finish and Wall Paint Finish in Dining Room 401B.

86. Drawing No. AF-105-2S, FIFTH FLOOR ROOM FINISH SCHEDULE: Delete Wall Base finish and Wall Paint Finish in Dining Room 501B.

87. Drawing No. AF-106-2S, SIXTH FLOOR ROOM FINISH SCHEDULE: Delete Wall Base finish and Wall Paint Finish in Dining Room 601B.

88. Drawing No. AF-107-2S, SEVENTH FLOOR ROOM FINISH SCHEDULE: Delete Wall Base finish and Wall Paint Finish in Dining Room 701B.

89. Drawing No. AF-108-2S, EIGHTH FLOOR ROOM FINISH SCHEDULE: Delete Wall Base finish and Wall Paint Finish in Dining Room 801B.

90. Drawing No. AF-109-2S, NINTH FLOOR ROOM FINISH SCHEDULE: Delete Wall Base finish and Wall Paint Finish in Dining Room 901B.

91. Drawing No. AF-110-2S, TENTH FLOOR ROOM FINISH SCHEDULE: Delete Wall Base finish and Wall Paint Finish in Dining Room 1001B.

92. Drawing No. AF-111-2S, ELEVENTH FLOOR ROOM FINISH SCHEDULE: Delete Wall Base finish and Wall Paint Finish in Dining Room 1101B.

93. Drawing Nos. AF-100-2A, AF-100-2B, AF-100-2C, AF-100-2D, AF-100-2E, AF-101-2A, AF-101-2B, AF-101-2C, AF-101-2D, AF-101-2E, AF-102-2A, AF-102-2B, AF-102-2C, AF-102-2D, AF-103-2A, AF-103-2B, AF-103-2C, AF-103-2D located at the upper right hand side of the sheet, SYMBOLS KEY: Change “CEILING FINISH” to read “CEILING PAINT FINISH”.

94. Drawing Nos. AF-104-2, AF-105-2, AF-106-2, AF-107-2, AF-108-2, AF-109-2, AF-110-2, AF-111-2, AF-112-2, AF-113-2, and AF-114-2, located at the upper left hand side of the sheet, SYMBOLS KEY: Change “CEILING FINISH” to read “CEILING PAINT FINISH”.

95. Drawing No. AF-101-2A, AF-101-2B, AF-101-2C, AF-101-2D, and AF-101-2E, FIRST FLOOR FINISH NOTES, Note 3: Delete this Note in its entirety and replace with the following:
"3. ALL CONCRETE FLOORING SHALL BE LEVELED".

96. Drawing No. AF-102-2A, AF-102-2B, AF-102-2C, and AF-102-2D, SECOND FLOOR FINISH NOTES, Note 3: Delete this Note in its entirety and replace with the following:
"3. ALL CONCRETE FLOORING SHALL BE LEVELED".

97. Drawing No. AF-103-2A, -AF-103-2B, AF-103-2C, and AF-103-2D, THIRD FLOOR FINISH NOTES, Note 3: Delete this Note in its entirety and replace with the following:
"3. ALL CONCRETE FLOORING SHALL BE LEVELED".

98. Drawing No. AF-104-2, FOURTH FLOOR FINISH NOTES, Note 3: Delete this Note in its entirety and replace with the following:
"3. ALL CONCRETE FLOORING SHALL BE LEVELED".

99. Drawing No. AF-105-2, FIFTH FLOOR FINISH NOTES, Note 3: Delete this Note in its entirety and replace with the following:
"3. ALL CONCRETE FLOORING SHALL BE LEVELED".

100. Drawing No. AF-106-2, SIXTH FLOOR FINISH NOTES, Note 3: Delete this Note in its entirety and replace with the following:
"3. ALL CONCRETE FLOORING SHALL BE LEVELED".

101. Drawing No. AF-107-2, SEVENTH FLOOR FINISH NOTES, Note 3: Delete this Note in its entirety and replace with the following:
"3. ALL CONCRETE FLOORING SHALL BE LEVELED".

102. Drawing No. AF-108-2, EIGHTH FLOOR FINISH NOTES, Note 3: Delete this Note in its entirety and replace with the following:
"3. ALL CONCRETE FLOORING SHALL BE LEVELED".

103. Drawing No. AF-109-2, NINTH FLOOR FINISH NOTES, Note 3: Delete this Note in its entirety and replace with the following:
"3. ALL CONCRETE FLOORING SHALL BE LEVELED".

104. Drawing No. AF-110-2, TENTH FLOOR FINISH NOTES, Note 3: Delete this Note in its entirety and replace with the following:
"3. ALL CONCRETE FLOORING SHALL BE LEVELED".

105. Drawing No. AF-111-2, ELEVENTH FLOOR FINISH NOTES, Note 3: Delete this Note in its entirety and replace with the following:
"3. ALL CONCRETE FLOORING SHALL BE LEVELED".

106. Drawing No. AF-112-2, TWELFTH FLOOR FINISH NOTES, Note 3: Delete this Note in its entirety and replace with the following:
"3. ALL CONCRETE FLOORING SHALL BE LEVELED".

107. Drawing No. AF-113-2, THIRTEENTH FLOOR FINISH NOTES, Note 3: Delete this Note in its entirety and replace with the following:
"3. ALL CONCRETE FLOORING SHALL BE LEVELED".

108. Drawing No. AF-100-2A, BASEMENT ROOM FINISH PLAN, PART A, and AF-100-2D, BASEMENT ROOM FINISH PLAN, PART D: Add the following Note:

"14. SELF-LEVELING WITH A TOLERANCE NOT TO EXCEED 1/16" (FF100) IN HIGH DENSITY STORAGE ROOM 029B-4 AND HIGH DENSITY FILES ROOM 033A".

109. Drawing No. AF-100-2A BASEMENT FINISH PLAN, PART A:
   a. Delete TT-5 from Existing Stair #2.
   b. Delete TT-5 from Mechanical Room 035A.
   c. Delete TT-5 from Door at Column Line 10 and Column Line I.
   d. Stair #2: Change “EP-1” floor finish to read “EP-2”.

110. Drawing No. AF-100-2B BASEMENT FINISH PLAN, PART B:
   a. Delete TT-5 from Corridor 016A.
   b. Delete TT-5 from Fan Room 018A
   c. Corridor 016A: Change “EP-1” floor finish to read “EP-2”.

111. Drawing No. AF-100-2C BASEMENT FINISH PLAN, PART C:
   a. Delete TT-5 from Existing Stair #3.
   b. Delete TT-5 from Electrical Closet 001A-1.
   c. Exist. Stair #3: Change “EP-1” floor finish to read “EP-2”.

112. Drawing No. AF-100-2D BASEMENT FINISH PLAN, PART D:
   a. Delete TT-5 from Existing Stair #14.

113. Drawing No. AF-100-2E BASEMENT FINISH PLAN, PART E:
   a. Delete TT-5 from Existing Stair #4.
   b. Delete TT-5 from Existing Riser 001B-1.
   c. Delete TT-5 from Electrical Substation 008B.
   d. Delete TT-5 from Mechanical Room 011B.
   e. Stair #4: Change “EP-1” floor finish to read “EP-2”.

114. Drawing No. AF-101-2A FIRST FLOOR FINISH PLAN, PART A:
   a. Delete TT-5 from Existing Stair #2.
   b. Delete TT-5 from New Stair P.
   c. Delete TT-5 from Door between Column Line H and I, and between Column Line 4 and Column Line 5.
   d. Delete TT-5 from Door at Column Line K and between Column Line -1 and -1.5.
   e. Delete TT-5 from Door at Column Line H and between Column Line -4 and -5.
   f. Exist. Stair #2: Change “EP-1” floor finish to read “EP-2”.

115. Drawing No. AF-101-2B FIRST FLOOR FINISH PLAN, PART B:
    a. Delete TT-5 from Door between Column Line G and G.1, and between Column Line 6 and 7
    b. Corridor 102A: Change "EP-1" floor finish to read "EP-2".

116. Drawing No. AF-101-2C FIRST FLOOR FINISH PLAN, PART C:
    a. Delete TT-5 from Existing Stair #2.
    b. Delete TT-5 from MIS 113A.
    c. Delete TT-5 from MIS 113A-1.
    d. Delete TT-5 from Electrical Room 114A.
    e. Delete TT-5 from Electrical Closet 115A.

117. Drawing No. AF-101-2D FIRST FLOOR FINISH PLAN, PART D:
    a. Delete TT-5 from Existing Stair #14.
    b. Delete TT-5 from Mechanical Room 153B.
    c. Delete TT-5 from Door at Column Line 25 between Column Line D and Column Line E.
    d. Delete TT-5 from Door at Column Line 25 between Column Line G.8 and Column Line G.1.
    e. Exist. Stair #7: Change "EP-1" floor finish to read "EP-2".

118. Drawing No. AF-101-2E FIRST FLOOR FINISH PLAN, PART E:
    a. Delete TT-5 from Existing Stair #4
    b. Delete TT-5 from Electrical Closet 162B
    c. Delete TT-5 from Existing Stair #9
    d. Delete TT-5 from Door at Column Line 25 and at Column Line G.8
    e. Delete TT-5 from Door at Column Line 25A and at Column Line K
    f. Exist. Stair #4: Change "EP-1" floor finish to read "EP-2".

119. Drawing No. AF-102-2A SECOND FLOOR ROOM FINISH PLAN, PART A:
    a. Delete TT-5 from Staircase Vestibule 206A-1.
    b. Delete TT-5 from Staircase Vestibule 207A-1.
    c. Delete TT-5 from Existing Stair #2.
    d. Delete TT-5 from door at Column Line 1 between Column Line I and Column Line J.
    e. Exist. Stair #1: Change "EP-1" floor finish to read "EP-2".
    f. Exist. Stair #2: Change "EP-1" floor finish to read "EP-2".
    g. Exist. Stair #36: Change "EP-1" floor finish to read "EP-2".
    h. New Stair #Q: Change "EP-1" floor finish to read "EP-2".

120. Drawing No. AF-102-2B SECOND FLOOR ROOM FINISH PLAN, PART B**:**
    a. Remove TT-5 from Corridor 221A-2.
    b. Corridor 221A-2: Change "EP-1" floor finish to read "EP-2".
    c. New Stair #M: Change "EP-1" floor finish to read "EP-2".

121. Drawing No. AF-102-2C SECOND FLOOR ROOM FINISH PLAN, PART C:
    a. Delete TT-5 from Existing Stair #3.
    b. Delete TT-5 from Electrical Room 214A.
    c. Delete TT-5 from Electrical Closet 215A.
    d. Delete TT-5 from 3 doors between Column Line 15 and Column Line 16 and between Column Line K and Column Line L.
    e. Exist. Stair #3: Change "EP-1" floor finish to read "EP-2".

122. Drawing No. AF-102-2D SECOND FLOOR ROOM FINISH PLAN, PART D:
    a. Delete TT-5 from Existing Stair #7.
    b. Delete TT-5 from Existing Stair #14.
    c. Exist. Stair #7: Change "EP-1" floor finish to read "EP-2".

123. Drawing No. AF-103-2A THIRD FLOOR ROOM FINISH PLAN, PART A:
    a. Delete TT-5 from Staircase Vestibule 334A-1
    b. Delete TT-5 from Staircase Vestibule 347A-1
    c. Delete TT-5 from Existing Stair #2
    d. Exist. Stair #1: Change "EP-1" floor finish to read "EP-2".
    e. New Stair #Q: Change "EP-1" floor finish to read "EP-2".

124. Drawing No. AF-103-2B THIRD FLOOR ROOM FINISH PLAN, PART B:
    a. Delete TT-5 from Dining Room 319A.

125. Drawing No. AF-103-2C THIRD FLOOR ROOM FINISH PLAN, PART C:
    a. Delete TT-5 from Electric 315A.
    b. Delete TT-5 from Existing Stair #3
    c. Delete TT-5 from door between Column Line 15 and Column Line 16 and between Column Line G and Column Line G.1.
    d. Exist. Stair #3: Change "EP-1" floor finish to read "EP-2".

126. Drawing No. AF-103-2D THIRD FLOOR ROOM FINISH PLAN, PART D:
    a. Delete TT-5 from door between Column Line 15 and Column Line 16 and between Column Line G and Column Line G.1

127. Drawing No. AF-104-2, FOURTH FLOOR ROOM FINISH PLAN:
    a. Delete TT-5 from Staircase Vestibule 434A-1.
    b. Delete TT-5 from Existing Stair #2.
    c. Delete TT-5 from Existing Stair #3.
    d. Delete TT-5 from Staircase Vestibule 447A-1.
    e. Delete TT-5 from Electric 415A.
    f. Exist. Stair #1: Change "EP-1" floor finish to read "EP-2".
    g. Exist. Stair #2: Change "EP-1" floor finish to read "EP-2".
    h. New Stair #Q: Change "EP-1" floor finish to read "EP-2".

128. Drawing No. AF-105-2, FIFTH FLOOR ROOM FINISH PLAN:
    a. Delete TT-5 from Staircase Vestibule 534A-1.
    b. Delete TT-5 from Existing Stair #2.
    c. Delete TT-5 from Existing Stair #3.
    d. Delete TT-5 from Staircase Vestibule 547A-1.
    e. Delete TT-5 from Electric 515A.
    f. Delete TT-5 from door between Column Line 15 and Column Line 16 and between Column Line G and Column Line G.1.
    g. Exist. Stair #1: Change "EP-1" floor finish to read "EP-2".
    h. Exist. Stair #2: Change "EP-1" floor finish to read "EP-2".
    i. New Stair #Q: Change "EP-1" floor finish to read "EP-2".

129. Drawing No. AF-106-2, SIXTH FLOOR ROOM FINISH PLAN:
    a. Delete TT-5 from Staircase Vestibule 634A-1.
    b. Delete TT-5 from Existing Stair #2.
    c. Delete TT-5 from Existing Stair #3.
    d. Delete TT-5 from Staircase Vestibule 647A-1.
    e. Delete TT-5 from Electric 615A.
    f. Delete TT-5 from door between Column Line 15 and Column Line 16 and between Column Line G and Column Line G.1.

g. Exist. Stair #1: Change “EP-1” floor finish to read “EP-2”.
h. Exist. Stair #2: Change “EP-1” floor finish to read “EP-2”.
i. New Stair #Q: Change “EP-1” floor finish to read “EP-2”.

130. Drawing No. AF-107-2, SEVENTH FLOOR ROOM FINISH PLAN:
a. Delete TT-5 from Staircase Vestibule 734A-1.
b. Delete TT-5 from Existing Stair #2.
c. Delete TT-5 from Existing Stair #3.
d. Delete TT-5 from Staircase Vestibule 747A-1.
e. Delete TT-5 from Electric 715A.
f. Delete TT-5 from door between Column Line 15 and Column Line 16 and between Column Line G and Column Line G.1.
g. Exist. Stair #1: Change “EP-1” floor finish to read “EP-2”.
h. Exist. Stair #2: Change “EP-1” floor finish to read “EP-2”.
i. New Stair #Q: Change “EP-1” floor finish to read “EP-2”.

131. Drawing No. AF-108-2, EIGHTH FLOOR ROOM FINISH PLAN:
a. Delete TT-5 from Staircase Vestibule 834A-1
b. Delete TT-5 from Existing Stair #2
c. Delete TT-5 from Existing Stair #3
d. Delete TT-5 from Staircase Vestibule 847A-1
e. Delete TT-5 from Electric 815A
f. Delete TT-5 from door between Column Line 15 and Column Line 16 and between Column Line G and Column Line G.1
g. Exist. Stair #1: Change “EP-1” floor finish to read “EP-2”.
h. Exist. Stair #2: Change “EP-1” floor finish to read “EP-2”.
i. New Stair #Q: Change “EP-1” floor finish to read “EP-2”.

132. Drawing No. AF-109-2, NINTH FLOOR ROOM FINISH PLAN:
a. Delete TT-5 from Staircase Vestibule 934A-1
b. Delete TT-5 from Existing Stair #2
c. Delete TT-5 from Existing Stair #3
d. Delete TT-5 from Staircase Vestibule 947A-1
e. Delete TT-5 from Electric 915A
f. Delete TT-5 from door between Column Line 15 and Column Line 16 and between Column Line G and Column Line G.1
g. Exist. Stair #1: Change “EP-1” floor finish to read “EP-2”.
h. Exist. Stair #2: Change “EP-1” floor finish to read “EP-2”.
i. New Stair #Q: Change “EP-1” floor finish to read “EP-2”.

133. Drawing No. AF-110-2, TENTH FLOOR ROOM FINISH PLAN:
a. Delete TT-5 from Staircase Vestibule 1034A-1
b. Delete TT-5 from Existing Stair #2
c. Delete TT-5 from Existing Stair #3
d. Delete TT-5 from Staircase Vestibule 1047A-1
e. Delete TT-5 from Electric 1015A
f. Delete TT-5 from door between Column Line 15 and Column Line 16 and between Column Line G and Column Line G.1
g. Exist. Stair #1: Change “EP-1” floor finish to read “EP-2”.
h. Exist. Stair #2: Change “EP-1” floor finish to read “EP-2”.
i. New Stair #Q: Change “EP-1” floor finish to read “EP-2”.

134. Drawing No. AF-111-2, ELEVENTH FLOOR ROOM FINISH PLAN:
a. Delete TT-5 from Staircase Vestibule 1134A-1.
b. Delete TT-5 from Existing Stair #2.

c. Delete TT-5 from Existing Stair #3.
d. Delete TT-5 from Staircase Vestibule 1147A-1.
e. Delete TT-5 from Electric 1115A.
f. Delete TT-5 from door between Column Line 15 and Column Line 16 and between Column Line G and Column Line G.1.
g. Exist. Stair #1: Change "EP-1" floor finish to read "EP-2".
h. Exist. Stair #2: Change "EP-1" floor finish to read "EP-2".
i. New Stair #Q: Change "EP-1" floor finish to read "EP-2".

135. Drawing No. AF-112-2, TWELFTH FLOOR ROOM FINISH PLAN:
a. Delete TT-5 from Staircase Vestibule 1223A-1.
b. Delete TT-5 from Existing Stair #2.
c. Delete TT-5 from 3 doors at Mechanical Room 1209A.
d. Exist. Stair #1: Change "EP-1" floor finish to read "EP-2".
e. Exist. Stair #2: Change "EP-1" floor finish to read "EP-2".

136. Drawing No. AF-113-2, THIRTEENTH FLOOR ROOM FINISH PLAN:
a. Delete TT-5 from Staircase Vestibule 1323A-1.
b. Delete TT-5 from Existing Stair #2.
c. Delete TT-5 from 2 doors at Mechanical Room 1309A.
d. Exist. Stair #1: Change "EP-1" floor finish to read "EP-2".
e. Exist. Stair #2: Change "EP-1" floor finish to read "EP-2".

137. Drawing No. AF-114-2, FOURTEENTH & FIFTEENTH FLOOR ROOM FINISH PLAN:
a. Delete TT-5 from Staircase Vestibule 1419A-1.
b. Delete TT-5 from Existing Stair #2.
c. Exist. Stair #1: Change "EP-1" floor finish to read "EP-2".
d. Exist. Stair #2: Change "EP-1" floor finish to read "EP-2".

138. Drawing No. AF-101-2D FIRST FLOOR ROOM FINISH PLAN, PART D:
a. Remove all finish in Existing Stair 14.

139. Drawing No. AF-102-2A SECOND FLOOR ROOM FINISH PLAN, PART A:
a. Delete P-1 in Existing Stair #1.

140. Drawing No. AF-102-2D SECOND FLOOR ROOM FINISH PLAN, PART D:
a. Remove all finish in Existing Stair 14.

141 Drawing No. AF-103-2A THIRD FLOOR ROOM FINISH PLAN, PART A:
a. Delete P-1 in Existing Stair #1.

142. Drawing No. AF-103-2D THIRD FLOOR ROOM FINISH PLAN, PART D:
a. Delete all finishes in Existing Stair 14.

143. Drawing No. AF-104-2, FOURTH FLOOR ROOM FINISH PLAN:
a. Delete all finishes in Existing Stair 14.
b. Delete P-1 in Existing Stair #1

144. Drawing No. AF-105-2, FIFTH FLOOR ROOM FINISH PLAN:
a. Delete all finishes in Existing Stair 14.
b. Delete P-1 in Existing Stair #1

145. Drawing No. AF-106-2, SIXTH FLOOR ROOM FINISH PLAN:
a. Delete all finishes in Existing Stair 14.
b. Delete P-1 in Existing Stair #1

146. Drawing No. AF-107-2, SEVENTH FLOOR ROOM FINISH PLAN:
   a. Delete all finishes in Existing Stair 14.
   b. Delete P-1 in Existing Stair #1

147. Drawing No. AF-108-2, EIGHTH FLOOR ROOM FINISH PLAN:
   a. Delete all finishes in Existing Stair 14.
   b. Delete P-1 in Existing Stair #1

148. Drawing No. AF-109-2, NINTH FLOOR ROOM FINISH PLAN:
   a. Delete all finishes in Existing Stair 14.
   b. Delete P-1 in Existing Stair #1

149. Drawing No. AF-110-2, TENTH FLOOR ROOM FINISH PLAN:
   a. Delete all finishes in Existing Stair 14.
   b. Delete P-16 in Existing Stair #1

150. Drawing No. AF-111-2, ELEVENTH FLOOR ROOM FINISH PLAN:
   a. Delete all finishes in Existing Stair 14.
   b. Delete P-16 in Existing Stair #1

151 Drawing No. AF-112-2, TWELVTH FLOOR ROOM FINISH PLAN:
   a. Delete P-16 in Existing Stair #1

152. Drawing No. AF-113-2, THIRTEENTH FLOOR ROOM FINISH PLAN:
   a. Delete P-16 in Existing Stair #1

153. Drawing No. AF-114-2, FOURTEENTH & FIFTEENTH FLOOR ROOM FINISH PLAN:
   a. Delete P-16 in Existing Stair #1

154. Drawing No. AF-100-2C, BASEMENT ROOM FINISH PLAN, PART C:
   a. Elevator Lobby 000B: Change “P-1” wall finish to read “Z-1”.

155. Drawing No. AF-101-2C, FIRST FLOOR ROOM FINISH PLAN, PART C:
   a. Vestibule 110B: Change “P-1” wall finish to read “Z-1”.
   b. Corridor 110B-1: Change “P-1” wall finish to read “Z-1”.

156. Drawing No. AF-102-2C, SECOND FLOOR ROOM FINISH PLAN, PART C:
   a. Lobby 251B: Change “P-1” wall finish to read “Z-1”.
   b. Corridor 251B-1: Change “P-1” wall finish to read “Z-1”.

157. Drawing No. AF-103-2C, THIRD FLOOR ROOM FINISH PLAN, PART C:
   a. Ex. Elev Lobby 364B: Change “P-1” wall finish to read “Z-1”.

158. Drawing No. AF-104-2, FOURTH FLOOR ROOM FINISH PLAN:
   a. Ex. Elev Lobby 464B: Change “P-1” wall finish to read “Z-1”.

159. Drawing No. AF-105-2, FIFTH FLOOR ROOM FINISH PLAN:
   a. Ex. Elev Lobby 564B: Change “P-1” wall finish to read “Z-1”.

160. Drawing No. AF-106-2, SIXTH FLOOR ROOM FINISH PLAN:
   a. Ex. Elev Lobby 664B: Change “P-1” wall finish to read “Z-1”.

161. Drawing No. AF-107-2, SEVENTH FLOOR ROOM FINISH PLAN:
   a. Ex. Elev Lobby 764B: Change “P-1” wall finish to read “Z-1”.

162. Drawing No. AF-108-2, EIGHTH FLOOR ROOM FINISH PLAN:
   a. Ex. Elev Lobby 864B: Change “P-1” wall finish to read “Z-1”.

163. Drawing No. AF-109-2, NINETH FLOOR ROOM FINISH PLAN:
   a. Ex. Elev Lobby 964B: Change “P-1” wall finish to read “Z-1”.

164. Drawing No. AF-110-2, TENTH FLOOR ROOM FINISH PLAN:
   a. Ex. Elev Lobby 1064B: Change “P-16” wall finish to read “Z-2”.

165. Drawing No. AF-111-2, ELEVENTH FLOOR ROOM FINISH PLAN:
   a. Ex. Elev Lobby 1164B: Change “P-16” wall finish to read “Z-2”.

166. Drawing No. AF-100-2S, BASEMENT ROOM FINISH SCHEDULE:
   a. Elevator Lobby 000B: Change “P-1” wall finish to read “Z-1”.

167. Drawing No. AF-101-2S-B, FIRST FLOOR ROOM FINISH SCHEDULE, SIDE B:
   a. Vestibule 110B: Change “P-1” wall finish to read “Z-1”.
   b. Corridor 110B-1: Change “P-1” wall finish to read “Z-1”.

168. Drawing No. AF-102-2S, SECOND FLOOR ROOM FINISH SCHEDULE:
   a. Lobby 251B: Change “P-1” wall finish to read “Z-1”.
   b. Corridor 251B-1: Change “P-1” wall finish to read “Z-1”.

169. Drawing No. AF-103-2S, THIRD FLOOR ROOM FINISH SCHEDULE:
   a. Ex. Elev Lobby 364B: Change “P-1” wall finish to read “Z-1”.

170. Drawing No. AF-104-2S, FOURTH FLOOR ROOM FINISH SCHEDULE:
   a. Ex. Elev Lobby 464B: Change “P-1” wall finish to read “Z-1”.

171. Drawing No. AF-105-2S, FIFTH FLOOR ROOM FINISH SCHEDULE:
   a. Ex. Elev Lobby 564B: Change “P-1” wall finish to read “Z-1”.

172. Drawing No. AF-106-2S, SIXTH FLOOR ROOM FINISH SCHEDULE:
   a. Ex. Elev Lobby 664B: Change “P-1” wall finish to read “Z-1”.

173. Drawing No. AF-107-2S, SEVENTH FLOOR ROOM FINISH SCHEDULE:
   a. Ex. Elev Lobby 764B: Change “P-1” wall finish to read “Z-1”.

174. Drawing No. AF-108-2S, EIGHTH FLOOR ROOM FINISH SCHEDULE:
   a. Ex. Elev Lobby 864B: Change “P-1” wall finish to read “Z-1”.

175. Drawing No. AF-109-2S, NINETH FLOOR ROOM FINISH SCHEDULE:
   a. Ex. Elev Lobby 964B: Change “P-1” wall finish to read “Z-1”.

176. Drawing No. AF-110-2S, TENTH FLOOR ROOM FINISH SCHEDULE:
   a. Ex. Elev Lobby 1064B: Change “P-16” wall finish to read “Z-2”.

177. Drawing No. AF-111-2S, ELEVENTH FLOOR ROOM FINISH SCHEDULE:
   a. Ex. Elev Lobby 1164B: Change “P-16” wall finish to read “Z-2”.

178. Drawing No. AF-102-2A, SECOND FLOOR ROOM FINISH PLAN, PART A:
   a. Staircase Vestibule 206A-1: Change “EP-1” floor finish to read “EP-2”.
   b. Staircase Vestibule 207A-1: Change “EP-1” floor finish to read “EP-2”.

179. Drawing No. AF-103-2A, THIRD FLOOR ROOM FINISH PLAN, PART A:
   a. Staircase Vestibule 334A-1: Change “EP-1” floor finish to read “EP-2”.
   b. Staircase Vestibule 347A-1: Change “EP-1” floor finish to read “EP-2”.

180. Drawing No. AF-104-2, FOURTH FLOOR ROOM FINISH PLAN:
   a. Staircase Vestibule 434A-1: Change “EP-1” floor finish to read “EP-2”.
   b. Staircase Vestibule 447A-1: Change “EP-1” floor finish to read “EP-2”.

181. Drawing No. AF-105-2, FIFTH FLOOR ROOM FINISH PLAN:
   a. Staircase Vestibule 534A-1: Change "EP-1" floor finish to read "EP-2".
   b. Staircase Vestibule 547A-1: Change "EP-1" floor finish to read "EP-2".

182. Drawing No. AF-106-2, SIXTH FLOOR ROOM FINISH PLAN:
   a. Staircase Vestibule 634A-1: Change "EP-1" floor finish to read "EP-2".
   b. Staircase Vestibule 647A-1: Change "EP-1" floor finish to read "EP-2".

183. Drawing No. AF-107-2, SEVENTH FLOOR ROOM FINISH PLAN:
   a. Staircase Vestibule 734A-1: Change "EP-1" floor finish to read "EP-2".
   b. Staircase Vestibule 747A-1: Change "EP-1" floor finish to read "EP-2".

184. Drawing No. AF-108-2, EIGHTH FLOOR ROOM FINISH PLAN:
   a. Staircase Vestibule 834A-1: Change "EP-1" floor finish to read "EP-2".
   b. Staircase Vestibule 847A-1: Change "EP-1" floor finish to read "EP-2".

185. Drawing No. AF-109-2, NINTH FLOOR ROOM FINISH PLAN:
   a. Staircase Vestibule 934A-1: Change "EP-1" floor finish to read "EP-2".
   b. Staircase Vestibule 947A-1: Change "EP-1" floor finish to read "EP-2".

186. Drawing No. AF-110-2, TENTH FLOOR ROOM FINISH PLAN:
   a. Staircase Vestibule 1034A-1: Change "EP-1" floor finish to read "EP-2".
   b. Staircase Vestibule 1047A-1: Change "EP-1" floor finish to read "EP-2".

187. Drawing No. AF-111-2, ELEVENTH FLOOR ROOM FINISH PLAN:
   a. Staircase Vestibule 1134A-: Change "EP-1" floor finish to read "EP-2".
   b. Staircase Vestibule 1147A-1: Change "EP-1" floor finish to read "EP-2".

188. Drawing No. AF-112-2, TWELFTH FLOOR ROOM FINISH PLAN:
   a. Staircase Vestibule 1223A-1: Change "EP-1" floor finish to read "EP-2".

189. Drawing No. AF-113-2, THIRTEENTH FLOOR ROOM FINISH PLAN:
   a. Staircase Vestibule 1323A-1: Change "EP-1" floor finish to read "EP-2".

190. Drawing No. AF-114-2, FOURTEENTH & FIFTEENTH FLOOR ROOM FINISH PLAN:
   a. Staircase Vestibule 1419A: Change "EP-1" floor finish to read "EP-2".

191. Drawing No. AF-102-2S, SECOND FLOOR ROOM FINISH SCHEDULE:
   a. Staircase Vestibule 206A-1: Change "EP-1" floor finish to read "EP-2".
   b. Staircase Vestibule 207A-1: Change "EP-1" floor finish to read "EP-2".

192. Drawing No. AF-103-2S, THIRD FLOOR ROOM FINISH SCHEDULE:
   a. Staircase Vestibule 334A-1: Change "EP-1" floor finish to read "EP-2".
   b. Staircase Vestibule 347A-1: Change "EP-1" floor finish to read "EP-2".

193. Drawing No. AF-104-2S, FOURTH FLOOR ROOM FINISH SCHEDULE:
   a. Staircase Vestibule 434A-1: Change "EP-1" floor finish to read "EP-2".
   b. Staircase Vestibule 447A-1: Change "EP-1" floor finish to read "EP-2".

194. Drawing No. AF-105-2S, FIFTH FLOOR ROOM FINISH SCHEDULE:
   a. Staircase Vestibule 534A-1: Change "EP-1" floor finish to read "EP-2".
   b. Staircase Vestibule 547A-1: Change "EP-1" floor finish to read "EP-2".

195. Drawing No. AF-106-2S, SIXTH FLOOR ROOM FINISH SCHEDULE:
   a. Staircase Vestibule 634A-1: Change "EP-1" floor finish to read "EP-2".
   b. Staircase Vestibule 647A-1: Change "EP-1" floor finish to read "EP-2".

196. Drawing No. AF-107-2S, SEVENTH FLOOR ROOM FINISH SCHEDULE:
   a. Staircase Vestibule 734A-1: Change "EP-1" floor finish to read "EP-2".
   b. Staircase Vestibule 747A-1: Change "EP-1" floor finish to read "EP-2".

197. Drawing No. AF-108-2S, EIGHTH FLOOR ROOM FINISH SCHEDULE:
   a. Staircase Vestibule 834A-1: Change "EP-1" floor finish to read "EP-2".
   b. Staircase Vestibule 847A-1: Change "EP-1" floor finish to read "EP-2".

198. Drawing No. AF-109-2S, NINTH FLOOR ROOM FINISH SCHEDULE:
   a. Staircase Vestibule 934A-1: Change "EP-1" floor finish to read "EP-2".
   b. Staircase Vestibule 947A-1: Change "EP-1" floor finish to read "EP-2".

199. Drawing No. AF-110-2, TENTH FLOOR ROOM FINISH SCHEDULE:
   a. Staircase Vestibule 1034A-1: Change "EP-1" floor finish to read "EP-2".
   b. Staircase Vestibule 1047A-1: Change "EP-1" floor finish to read "EP-2".

200. Drawing No. AF-111-2, ELEVENTH FLOOR ROOM FINISH SCHEDULE:
   a. Staircase Vestibule 1134A-1: Change "EP-1" floor finish to read "EP-2".
   b. Staircase Vestibule 1147A-1: Change "EP-1" floor finish to read "EP-2".

201. Drawing No. AF-112-2S, TWELFTH FLOOR ROOM FINISH SCHEDULE:
   a. Staircase Vestibule 1223A-1: Change "EP-1" floor finish to read "EP-2".

202. Drawing No. AF-113-2S, THIRTEENTH FLOOR ROOM FINISH SCHEDULE:
   a. Staircase Vestibule 1323A-: Change "EP-1" floor finish to read "EP-2".

203. Drawing No. AF-114-2S, FOURTEENTH & FIFTEENTH FLOOR ROOM FINISH SCHEDULE:
   a. Staircase Vestibule 1419A: Change "EP-1" floor finish to read "EP-2".

204. Drawing No. AF-101-2C, FIRST FLOOR ROOM FINISH PLAN, PART C:
   a. Delete EP-1 and add VT-6 Floor Finish in MIS 113A.
   b. Delete LVT-5 and add VT-6 Floor Finish in MIS OFFICE 113A-1.

205. Drawing No. AF-101-2S-A, FIRST FLOOR ROOM FINISH SCHEDULE, PART A:
   a. Delete EP-1 and add VT-6 Floor Finish in MIS 113A.
   b. Delete LVT-5 and add VT-6 Floor Finish in MIS OFFICE 113A-1.

206. Drawing No. AD-200-2A , AD-200-2B, AD-200-2C, Revised Drawing (issued with Addendum #5) No. AD-200-2D, AD-200-2E, AD-201-2A, AD-201-2B, AD-201-2C, Revised Drawing (issued with Addendum #5) No. AD-201-2D, AD-201-2E, AD-202-2A, AD-202-2B, AD-202-2C, Revised Drawing (issued with Adendum #5) No. AD-202-2D, AD-203-2A,AD-203-2B,AD-203-2C , AD-203-2D, AD-204-2, AD-205-2, AD-206-, AD-207-2, AD-208-2, AD-209-2, AD-210-2, AD-211-2, AD-212-2, AD-213-2, AD-214-2, AD-215-2, AND AD-216-2, DEMOLITION NOTES: Add the following Note:
   "8. REMOVE ALL EXISTING FINISHES INCLUDING WOOD TRIM, ACROVYN, SIGNAGE, CHAIR RAILS AND MESSAGE BOARD FROM EXISTING WALL WITHIN THE PROJECT AREA WHICH ARE SHOWN TO REMAIN."

207. Drawing No. AD-200-2, AD-200-2B, AD-201-2, AD-201-2A, AD-201-2B, AD-202-2, AD-202-2A, AD-202-2B, AD-203-2, AD-203-2A, AD-203-2B, AD-204-2, AD-205-2, AD-206-2, AD-207-2, AD-208-2, AD-209-2, AD-210-2, AD-211-2, AD-212-2, AD-213-2, AD-214-2, AD-215-2, AD-216-2: At column line between 6&F and 6&H, remove the Keynote, 18 since windows have been removed, and add Note "REMOVE TEMPORARY PLYWOOD PROTECTION FROM WINDOWS REMOVED IN BID PACKAGE #1".

208. Drawing No. AD-200-2C:
   a. At column line 13 between L and M, add Keynote 18.
   b. At column line 17A between K and L, add Keynote 18.
   c. At column line 18A between M and N, add Keynote 18.
   d. At column line K between 18 and 18A, add Keynote 18.

209. Drawing No. AD-200-2E: At column line 22 between H and I, remove the staircase wall and tagged Keynote 2.

210. Revised (issued with Addendum #6): Drawing Nos. AF-100-2A , AF-100-2B, AF-100-2C, AF-100-2D, AF-100-2E, BASEMENT FINISH PLANS, PART A,B,C,D, & E: Delete Note #10 in its entirety and replace with the following:
   "10. ASTM F 1869-11 CALCIUM CHLORIDE TEST MUST PRODUCE 5 LBS. OF PRESSURE OR LESS FOR FLOOR INSTALLATION."

211. Revised Drawings:
   a. Drawing Nos. G-004-2, G-100-2, G-101-2, G-102-2, G-110-2, G-112-2, G-113-2, G-114-2, A-100-2C, A-102-2A, A-117-2, A-118-2, A-119-2, A-801A-2, A-802-2, A-801A-2, A-806-2, A-816-2, A-818-A2, A-911-2, A-928-2, AD-200-2C, AR-101-2C, and AF-115, noted "REVISED DRAWING 09/24/2015 accompany this Addendum and replace the same numbered originally issued drawings.

212. Addendum Drawings:
   a. Drawing No. A-818A-2, noted "ADDENDUM DRAWING 09/24/2015" accompanies this Addendum and forms part of the Contract Documents.

REFERENCE DRAWINGS

213. Drawing Nos. A-102, A-104, A-105, A-106, A-107, A-108, A-109, A-110, A-111, A-112, A-113, A-114, A-115, A-116, A-117, A-501, A-502, A-503, A-510, A-511, A-512, A-513, A-514, and A-515 from Project No. Q0763, and noted "REFERENCE DRAWING" accompany this Addendum and are included to show existing conditions and are for reference only.

214. Bulletin No. 12 (from Project 44579) noted "REFERENCE DRAWING FROM BID PACKAGE 1" accompanies this Addendum and is included to show existing conditions and is for reference only.

CIVIL DRAWINGS

215. Revised Drawings:
   a. Drawing Nos. CS-201, CS-202 noted "REVISED DRAWING 09/24/2015 accompany this Addendum and replace the same numbered originally issued drawings.

HAZARDOUS MATERIALS DRAWINGS:

216. Revised Drawings:
   a. Drawing Nos. H-099-1A, H-099-1B, H-100-1A, H-100-1B noted "REVISED DRAWING 09/24/2015 accompany this Addendum and replace the same numbered originally issued drawings.

HVAC DRAWINGS

217. Revised Drawings:
   a. Drawing Nos. M-100-2A, M-100-2C, M-101-2D, M-102-2A, M-302-2, M-304-2, M-305-2, M-501, M-502, M-506, M-637-2, M-643-2, M-644-2, M-658-2, M-200-2-2C, MD2-001-2, and MD2-100-2 noted "REVISED DRAWING 09/24/2015 accompany this Addendum and replace the same numbered originally issued drawings, and any same numbered previously issued Revised Drawings, and any same numbered previously issued Revised Drawings.

ELECTRICAL DRAWINGS

218. Revised Drawings:
   a. Drawing Nos. E-003, E-007, E-100-2C, E-100-2D ,E-101-2C, E-101-2E, E-102-2A, E-102-2C, E-102-2D, E-103-2A, E-103-2B, E-104-2A, E-104-2B, E-105-2A, E-106-2A, E-106-2B, E-107-2A, E-108-2A,E-109-2A,E-110-2A, E-111-2A,E-112-2A,E-114-2A,E-116-2,E-200-2C, E-201-2C, E-201-2D, E-201-2E, E-202-2A, E-505 noted "REVISED DRAWING 09/24/2015 accompany this Addendum and replace the same numbered originally issued drawings, and any same numbered previously issued Revised Drawings.

FIRE PROTECTION DRAWINGS

219. Revised Drawings:
   A. Drawings Nos. FP-099-2E, FP-100-2E, FP-102-2A, FP-601-2 noted "REVISED DRAWING 09/24/2015 accompany this Addendum and replace the same numbered originally issued drawings, and any same numbered previously issued Revised Drawings

END OF ADDENDUM

Margaret F. Larkin
Executive Director
Design and Construction

AD/JRC/CW:jc

DOCUMENT 003113

PRELIMINARY PROJECT SCHEDULE

A Preliminary Project Schedule has been prepared for this project in CPM network Primavera P-6 format utilizing the Precedence Diagram Method. Bid Milestones are presented on the following pages which encompass the anticipated durations of Work related to the Project. The Preliminary Project Schedule and Bid Milestones are included as part of this section and will be used to develop the final CPM Baseline Project Schedule preparation in accordance with Sections 013200 and 013119.

After execution of the CMU-01 Agreement (blank included on last page of document 013200), the Project Schedule will become the basis for coordinating the work activities, measuring progress, and approving progress payments.

NOTE:

A. The prospective bidder expressly understands that his bid for the Work shall be based upon meeting all the established milestone dates, even if to meet such milestone dates requires expedited delivery of material, additional manpower, additional equipment, additional concurrent operations and overtime.

B. Failure to meet the established **Critical Milestone** dates for Activity ID #'s a. thru f. noted below, may result in assessment of liquidated damages as described in Article 13 of the General conditions.

a. AX00-09L BENEFICIAL OCCUPANCY: 09 - 11 FL MER / LOBBY - PHASE I
b. VUS0+ST START - TEMP. USE OF ELEVATORS FOR CONSTRUCTION
c. AX00+06L BENEFICIAL OCCUPANCY: 06 - 08 FL MER / LOBBY - PHASE II
d. AX00+03L BENEFICIAL OCCUPANCY: 03 - 05 FL MER / LOBBY- PHASE III
e. AZ00+00 BENEFICIAL OCCUPANCY FLRS 16 to 1 & BSMT PHARMACY
f. AZ00+.1A SUBSTANTIAL COMPLETION BSMT & SITE

C. The start of work for this contract, which is indicated in the Preliminary Project Schedule as Activity ID BA45 'Notice of Award', shall be adjusted to reflect the actual date of the Notice of Award. If Activity BA45 is delayed through no fault of the Contractor, then the remaining milestone dates will be adjusted by adding the corresponding period of delay to the milestone dates.

Major Building Renovations for the
Manhattan Forensic Relocation (MPC Building 102)
OGS CONTRACT 44578
MILESTONE DATES

Activity ID	Activity Name	Start	Finish	CAL DAYS FROM NOA
AN00-00	NOTICE OF AWARD (NOA) PACKAGE 2	**Error! Not a valid link.**		
CRITICAL - MILESTONES				
AX00+09L	BENEFICIAL OCCUPANCY: 09 - 11 FL MER / LOBBY - PHASE I		9-Mar-17	**463**

VUS0+ST	START - TEMP. USE OF ELEVATORS FOR CONSTRUCTION	13-Jun-17		**559**
AX00+06L	BENEFICIAL OCCUPANCY: 06 - 08 FL MER / LOBBY - PHASE II		8-Nov-17	**707**
AX00+03L	BENEFICIAL OCCUPANCY: 03 - 05 FL MER / LOBBY- PHASE III		14-Jun-18	**925**
AZ00+00	BENEFICIAL OCCUPANCY FLRS 16 to 1 & BSMT PHARMACY		21-Aug-18	**993**
AZ00+.1A	SUBSTANTIAL COMPLETION BSMT & SITE		12-Mar-19	**1196**
HVAC - MILESTONES				
FBX00+16	START - CO'ORDINATION MTGS	12-Feb-16		**72**
FBF00+16	START - FABRICATION OF DUCT (1st DELIVERY)	22-Feb-16		**82**
GBF50+00	START - FAB / DEL AHU UNITS	18-May-16		**168**
HDP0+09M	FINISH DUCT INSTALLATION; 09 - 11 FL MER - PHASE I		22-Dec-16	**386**
HDP0+06M	FINISH DUCT INSTALLATION; 06 - 08 FL MER - PHASE II		23-Aug-17	**630**
HDP0+03M	FINISH DUCT INSTALLATION; 03 - 05 FL MER - PHASE III		29-Mar-18	**848**
ELEVATOR - MILESTONES				
CBF20+00	START - FABRICATION STRUCTURAL STEEL - ELEVATOR TOWER	1-Mar-16		**90**
CS00+ST	FINISH - ERECTING STEEL - ELEVATOR TOWER		23-May-16	**173**
VP00+ST	START - ELEVATOR - RAILS / PLATFORM / MOTORS	31-Jan-17		**426**
VKT0+ST	START - BUILDING TEMP - ELEVATOR CABS	18-Apr-17		**503**
VKP0+ST	FINISH - REFURBISHING ELEVATORS FOR ACCEPTANCE		16-Jul-18	**957**
ELECTRICAL - MILESTONES				
IBA40+0	RELEASE ELEC SERVICE EQUIP FOR FABRICATION		11-Mar-16	**100**
BD00+LF	START - Ist DELIVERY LIGHT FIXTURES (By Others)	2-Jun-16		**183**
RE00+.1E	START - INSTALL ELECTRICAL BUS DUCT RISERS	4-Jul-16		**215**
HL00+14	START - INSTALL CEILING LIGHT FIXTURES	10-Oct-16		**313**
ENR0+.1E	FINISH - ENERGIZE BUS DUCT		17-Mar-17	**471**
EEH0+.1E	FINISH - POWER TO HVAC UNITS - FLOORS		26-	**541**

	B, 1, 2, 3,, 12, 13, 16		May-17	
KG00+00	FIRE ALARM SYSTEM - COMPLETE TESTS - BLDG WIDE		20-Jul-18	**961**
INTERIOR - MILESTONES				
JBA60+00	RELEASE FOR FABRICATION METAL DOORS & FRAMES		4-Apr-16	**124**
14 - FL				
FR00+14	START - INSTALL HOLLOW METAL & FRAME PARTITIONS - 14 FL	6-Jun-16		**187**
HB00+14	START - BLACK IRON - 14 FL	8-Aug-16		**250**
DB00+14	FINISH - AIR BALANCE - 14 FL		18-Nov-16	**352**
LS00+14	START - SECURITY & IT DEVICES AND EQUIPMENT - 14 FL	5-Dec-16		**369**
12 - FL				
FR00+12	START - INSTALL HOLLOW METAL & FRAME PARTITIONS - 12 FL	1-Aug-16		**243**
HB00+12	START - BLACK IRON - 12 FL	3-Oct-16		**306**
DB00+12	FINISH - AIR BALANCE - 12 FL		27-Jan-17	**422**
LS00+12	START - SECURITY & IT DEVICES AND EQUIPMENT - 12 FL	13-Feb-17		**439**
09 - FL				
FR00+09	START - INSTALL HOLLOW METAL & FRAME PARTITIONS - 09 FL	31-Oct-16		**334**
HB00-+09	START - BLACK IRON - 09 FL	29-Dec-16		**393**
DB00+09	FINISH - AIR BALANCE - 09 FL		3-May-17	**518**
LS00+09	START - SECURITY & IT DEVICES AND EQUIPMENT - 09 FL	25-May-17		**540**
06 - FL				
FR00+06	START - INSTALL HOLLOW METAL & FRAME PARTITIONS - 06 FL	23-Jan-17		**418**
HB00+06	START - BLACK IRON - 06 FL	23-Mar-17		**477**
LS00+06	START - SECURITY & IT DEVICES AND EQUIPMENT - 06 FL	17-Aug-17		**624**
DB00+06	FINISH - AIR BALANCE - 06 FL		25-Oct-17	**693**
03 - FL				
FR00+03	START - INSTALL HOLLOW METAL & FRAME PARTITIONS - 03 FL	17-Apr-17		**502**
HB00+03	START - BLACK IRON - 03 FL	22-Jun-17		**568**
LS00+03	START - SECURITY & IT DEVICES AND EQUIPMENT - 03 FL	30-Nov-17		**729**
DB00+03	FINISH - AIR BALANCE - 03 FL		1-May-	**881**

			18	
BSMT				
FR00+.1	START - INSTALL HOLLOW METAL & FRAME PARTITIONS - BSMT	23-Oct-17		**691**
HB00+.1	START - BLACK IRON - BSMT	12-Dec-17		**741**
LS00+.1	START - SECURITY & IT DEVICES AND EQUIPMENT - BSMT	2-Apr-18		**852**
DB00+.1	FINISH - AIR BALANCE - BSMT		12-Jun-18	**923**
BASEMENT REMAINING SPACES (+ 6 Mos) - MILESTONES				
FR00+.1A	START - INSTALL HOLLOW METAL & FRAME PARTITIONS - BSMT	17-Oct-18		**1050**
HB00+.1A	START - BLACK IRON - BSMT	21-Nov-18		**1085**
DB00+.1A	FINISH - AIR BALANCE - BSMT		5-Feb-19	**1161**
LS00+.1A	START - SECURITY & IT DEVICES AND EQUIPMENT - BSMT	6-Feb-19		**1162**
SITEWORK - MILESTONES				
SV00+SW	INSTALL CCTV AND TAUT WIRE CONTROLS - WEST		6-Nov-17	**705**
SV00+SE	INSTALL CCTV AND TAUT WIRE CONTROLS - EAST		4-Dec-17	**733**
SV00+SN	INSTALL CCTV AND TAUT WIRE CONTROLS - NORTH EAST		1-Jan-18	**761**
SV00+SS	INSTALL CCTV AND TAUT WIRE CONTROLS - SOUTH		8-Jan-19	**1133**

DOCUMENT 007305

SUPPLEMENTARY CONDITIONS - LIQUIDATED DAMAGES

This supplement modifies the General Conditions. Where any part of the General Conditions is modified by this supplement, the unaltered provisions of that part shall remain in effect.

ARTICLE 2 - DEFINITIONS

2.11 Delete this Paragraph in its entirety, substitute the following:

2.11 The term "liquidated damages" means the amount of money to be assessed against the Contractor for delay in completion of the Work.

ARTICLE 13 - TIME OF COMPLETION AND TERMINATION FOR CAUSE

13.3 Delete this Paragraph in its entirety and replace with the following:

13.3 Liquidated Damages: Should Contractor fail to substantially complete the Work within the time frame set forth in the contract, or as described in a subsequent Order(s) on Contract, the Group Director may assess Liquidated Damages for such failure in the amount of $5,000.00 per day until such time as the Group Director determines that the Work is substantially complete as defined in Section 2.21 herein. Should Contractor fail to achieve physical completion of the work within the time frame set forth in the contract, the Group Director may assess Liquidated Damages for such failure in the amount of $5,000.00 per day until such time as the Group Director determines that the Work is physically complete as defined in Section 2.12 herein. Notwithstanding the provisions of Article 21 herein, Contractor agrees that the Group Director may withhold the sum of the Liquidated Damages from payments to be made to Contractor as compensation to the State for administrative fees and public inconvenience.

13.3.1 Delete this Paragraph in its entirety and replace with.

13.3.1 Contract Award Submittals: The Contractor agrees that upon failure to submit Contract Award Submittals as specified in Section 011000, the Contractor shall pay to the State an Administrative surcharge in the amount of $75.00 per day for each day of delay, until all Contract Award Submittals are received. Notwithstanding the provisions of Article 21 herein, Contractor agrees that the Group Director may withhold the sum of the Administrative surcharge from payments to be made to Contractor as compensation for the State's administrative fees in pursuing such submittals.

13.3 Add the following Paragraph:

13.3.3 Critical Milestone Dates: Should Contractor fail to complete the Work for each Critical Milestone Date identified in Section 013113, within the time frame approved by the Director's Representative, the Group Director may assess Liquidated Damages for such failure in the amount of $ 5,000.00 per day until such time as the Group Director determines that the Work is substantially complete as defined in Section 2.21 herein.

END OF DOCUMENT

SECTION 051200

STRUCTURAL STEEL

PART 1 GENERAL

1.01 RELATED WORK SPECIFIED ELSEWHERE

A. Fluted Steel Decks: Section 053100.

1.02 REFERENCES

A. Except as shown or specified otherwise, the Work of this Section shall meet the requirements of the following:
   1. Design, Fabrication, and Erection: "Specification for Structural Steel Buildings, 13th Edition, by the American Institute of Steel Construction (AISC 360-05).
   2. Standard Practice: Fabrication and erection practices shall comply with the "Code of Standard Practice for Steel Buildings and Bridges", March 18, 2005, by the American Institute of Steel Construction (AISC 303-05).
   3. Welding: Welding shall comply with the provisions of the "Structural Welding Code - Steel, AWS D1.1", by the American Welding Society (AWS Code).
   4. High-Strength Bolting: High-strength bolting shall comply with the "Specification for Structural Joints Using ASTM A 325 or A 490 Bolts" approved by the Research Council on Structural Connections of the Engineering Foundation on June 30, 2004 (Specification for Structural Joints).
   5. Cleaning Steel: Comply with the appropriate specifications (SSPC SP-X) by the Steel Structures Painting Council.
   6. Seismic provisions for structural steel buildings (AISC 341-05)

1.03 DEFINITIONS

A. AISC Manual: Where reference is made to the AISC Manual, it shall mean the Manual of Steel Construction, 13th Edition, of the American Institute of Steel Construction.

B. Structural Steel: Consists of the steel elements of the structural steel frame essential to support the design loads. These elements consist of material as shown on the structural steel plans and listen in article 2.1 of the AISC "Code of Standard Practice for Steel Buildings and Bridges."

1.04 REQUIREMENTS FOR CONNECTIONS

A. General:

1. Except where Type 1 (rigid-frame) or Type 3 (semi-rigid framing) connections are indicated, the design has been prepared on the basis of Type 2 (simple or unrestrained) connections, complying with the provisions of Section B3.6a of the AISC Specification.
2. Do not use connection details which depend upon sharing the stress between any combination of high-strength bolts in bearing-type connections and welds.
3. Size connections for the loads and criteria indicated on the Construction Drawings. Connections shown on the Construction Drawings are for concept only. Fabricator shall design and detail all connections and submit signed and sealed connection design calculations and shop drawings for review and approval.
4. Delete Paragraph J 1.7 of the AISC Specification. Whenever axially loaded members are connected by groups of welds or bolts not located symmetrically with respect to the gravity axis or axes of the connected member, the welds or bolts shall resist both the axial load and the moment produced by their eccentricity in the plane of the connection.
   a. For end connections of axially loaded angles not subject to repeated variation in stress, fillet welds may resist axial load only, with the following limitations: The length of fillet weld at the heel of the angle shall be not less than 1/2 nor more than 2/3 of the total length required for the axial load. The length of fillet weld at the toe of the angle shall be not less than 1/3 or more than 1/2 of the total length required for the axial load.
5. All bolted connections shall have a minimum of two bolts.

B. Shop Connections: Unless otherwise indicated, all shop connections shall be welded or high strength bolted. Field connections required to be welded or fully-tensioned high-strength bolted shall meet the same requirements when fabricated in the shop.

C. Field Connections:

1. For a list of connections that shall be welded or fully-tensioned high-strength see the Contract Drawings.
2. All other bolted field connections need only be tightened to the snug tight condition.
3. When steel members of any cross section are to be spliced by welding in the field, a detailed welding procedure shall be submitted to the Director for approval. The procedure shall be detailed on shop drawings, submitted and approved prior to the fabrication of structural steel. The detailed field welding procedure shall include the method of supporting members during welding. All field welded splices shall be subject to non-destructive testing, Radiographic Testing (RT), or Ultrasonic Testing (UT), as determined by the Director. Field splice locations, when specifically shown on contract documents, shall not be relocated nor shall splices be added without written approval of the Director.

D. Standard Beam Connections:

1. Unless otherwise shown on the Drawings or required in the Specifications, all beam connections shall be framed in accordance with Part 9 of the AISC Manual, with sizes and lengths of angles and welds and with fastener spacings as shown therein.
2. Standard beam connections shown on the Drawings shall be fabricated as detailed. Substitutions will not be approved.

E. Special Beam Connections:

1. Where special conditions make it impracticable to provide connections complying with Paragraphs A thru D, and no details for such connections are shown on the Drawings, special connections shall be used. Such special connections shall, in general, comply with the provisions of the AISC Manual.
2. Typical details of proposed special connections shall be shown on the job standards.
3. Special connections shown on the Drawings shall be fabricated as detailed. Substitutions will not be approved.

1.05 SUBMITTALS

A. Shop Drawings: Submit shop drawings for all structural steel required by this Contract and in accordance with section 1.05.A.3. Machine-duplicated copies of Contract Drawings will not be accepted as shop drawings. Shop drawings shall be standard 24 by 36 inch size sheets, except that erection drawings may be larger. The margin line shall be drawn a minimum of 1/2 inch from edge of sheet. The title block shall be placed in the lower right hand corner of the drawing, and shall contain the fabricator's name, address, and telephone number. Failure to submit legible drawings of required size will be cause for their disapproval without review. If the drawings are not prepared by a detailer under the direct control of the fabricator, the fabricator shall stamp each drawing and initial or sign the stamp to certify review and approval of the drawings, and conformance with the fabricator's shop practice and capability.

1. Include the following in the initial submission:
   a. Drawings of proposed job standards for shop and field connections, including standard and special connections, complying with the requirements.
   b. Erection drawings indicating sizes, weights, and locations of all structural members.
   c. Anchor bolt and base plate plans.
2. Do not submit detail drawings, other than for anchor bolts and base plates, until after approval of the job standards and the erection drawings.
3. Include the following in subsequent submissions:
   a. Index sheets and revised erection drawings to which erection marks have been added.
   b. Detail drawings of all structural members.
   c. Connection design
4. Indicate all required shop and field welds by Standard AWS Welding Symbols in accordance with AWS A2.4.
5. Indicate shop painting requirements.

6. When shop drawings are marked “Approved as Noted”, promptly resubmit copies of corrected shop drawings for formal approval and record.
7. Contract Drawings are not considered released for construction. Orders for materials may be placed only after approval of erection drawings or written approval of the Director.
8. All connections shall be designed and all drawings shall be prepared under supervision of a professional engineer licensed in the state of New York.

B. Product Data:
1. Submit manufacturer’s specifications for the following products:
   a. Primer paint, galvanizing repair paint
   b. Expansion/adhesive anchors
   c. Zinc metalizing

C. Quality Control Submittals:
1. Test Reports: Submit 3 copies of each of the following:
   a. Steel manufacturer’s mill test reports, covering physical and chemical tests, for all main material.
   b. Bolt manufacturer’s test reports, covering physical and chemical tests, for each lot of high strength bolts supplied.
   c. Test reports shall be submitted no later than the end of the week covered by the reports.
2. Certificates: Whenever any structural steel items other than main members, such as anchor bolts, base plates and detail material, are supplied either from plant stock or from a warehouse, submit 3 copies of evidence of compliance of the material with the applicable requirements of this Specification. Such evidence shall consist of certification as to the source of the material and copies of purchase orders, manufacturer’s certifications or, in the case of stock material, copies of the latest mill orders or purchase orders for routine replacement of such stock material.
3. Fabricator’s and Erector’s Qualifications Data: Name and experience of fabricator and erector.
   a. Include a summary of their QC programs.
4. Welding Procedure Specifications: Submit procedure specifications for each joint to be welded by submerged arc or flux cored arc welding.
5. Welder’s Certification: Submit each welder’s welding certification for each type weld and position before fabrication.

D. LEED Design Submittals:
1. MR Credit 4.1 and MR Credit 4.2: Identify manufacturer’s name, the percentage of post-consumer recycled content by weight, the pre-consumer recycled content by weight, and the cost of the product.
2. MR Credit 5.1 and MR Credit 5.2: Identify source, cost, and the fraction by weight that is considered regional.

1.06 QUALITY ASSURANCE

A. Fabricator's Qualifications: The fabricator of the structural steel shall be regularly engaged in the fabrication of structural steel, and shall be subject to the approval of the Director. AISC Quality Certified Fabricators (latest list issued) are approved.

B. Erector's Qualifications: The structural steel erector shall be regularly engaged in the erection of structural steel, and shall be subject to the approval of the Director.

C. Welders' Qualifications: Welding shall be performed only by welders, welding operators, and tackers who have been qualified by tests as prescribed in the AWS Code to perform the type of welding required.

D. Do not deviate from the requirements of the Contract Documents except where an option is specifically mentioned. The Owner, however, may accept deviations proposed by the Contractor when it is deemed in the best interest of the State and if the deviations are consistent with sound and accepted engineering practice. Requests for deviations shall be made prior to the submission of shop drawings to preclude delay in the expeditious preparation and approval of the required shop drawings. In addition, design calculations or other data may be required to establish conformity of such deviations with the applicable Standards.

E. Galvanizing: Stamp galvanized items with galvanizer's name, weight of coating, and applicable ASTM number.

F. Pre-Fabrication Meeting: A minimum of 14 days prior to the initial submission of shop drawings, a meeting will be held at the Site for the purpose of reviewing the Contract Documents, and discussing the requirements and procedures for submittals and for the Work. The meeting will be conducted by the Owner. The Contractor and the fabricator's project coordinator and certified welding inspector must attend the meeting. The Owner and a representative of OGS D&C Structural Engineering will also attend.

G. Work of this section shall conform to all requirements of the 2010 NYS Building Code and all applicable regulations of governmental authorities having jurisdiction including safety, health, noise and anti-pollution regulations.

H. Structural steel shall conform to the material acceptance, certification and inspection requirements of section BC1701 of the 2010 NYS Building Code. Quality welding processes and welding operators shall be in accordance with AWS "Standard Qualification Procedure."

1.07 INSPECTION

A. Quality Control Inspection: Maintain Quality Control (QC) inspection during the fabrication and erection of structural steel.

1. Submit for approval a summary of the QC programs of the proposed fabricator and erector, including a list of their QC personnel and respective duties. Failure to obtain approval of the QC programs will

result in rejection of the proposed fabricator and erector. AISC Quality Certified Fabricators submit copy of QC Certificate (Submission of QC program summary is waived).

2. At least one of the fabricator's and one of the erector's QC personnel shall be an American Welding Society Certified Welding Inspector (CWI). If the fabricator and/or the erector find it necessary to temporarily employ an independent CWI, they shall not utilize Professional Service Industries/PTL Division and Jersey Technology Laboratories (under contract to the State) for structural steel inspection.
3. The fabricator's CWI shall make minimum QC inspections as follows and shall prepare daily reports of such inspections:
   a. At the start of fabrication to review welder qualifications, welding procedure specifications and qualifications, welding equipment and consumables, structural steel identification and tracking procedures and to perform all other CWI duties appropriate to start up of the specific project.
   b. Periodically during the preparation and fit up of material for groove welding.
   c. At all times that full penetration groove welding is being performed.
   d. As necessary to ensure that all welding related requirements of this section are being complied with.
   e. Minimum QC inspection time by the CWI shall be one-half day every other day that any welding related structural steel fabrication is being performed.
4. The erector's CWI shall make minimum QC inspections as follows, and shall prepare daily reports of such inspections:
   a. Prior to commencement of field welding operations to review welder qualifications, welding procedure specifications and qualifications, welding equipment and consumables and to perform all other CWI duties appropriate to start up of field welding for the specific project.
   b. Periodically during fit-up of material for full penetration groove welds.
   c. At all times that full penetration groove welding is being performed.
   d. As necessary to ensure that all welding related requirements of this section are being complied with.
   e. Minimum QC inspection time shall be one-half day on at least three separate days for every week that any structural steel field welding is being performed. This minimum time may be reduced if, in the opinion of the Owner, such reduction is appropriate.

B. Quality Assurance (QA) inspection of structural steel fabrication and field welding and high-strength bolting may be made at the discretion of the Director. The qualification of welding procedures, welders, and tackers will be covered by

such QA inspection. Representatives of the Director and/or designated inspection laboratory shall be given free and easy access to fabrication shop and field at all times that work is in progress. QA inspections will be made without cost to the Contractor.

1. If QA inspection is made by the State, it shall not relieve the Contractor, fabricator, and erector of responsibility for their own QC programs.
2. When QA inspection is made by the State, schedule and perform the Work as required to minimize the cost to the State for QA inspection. When failure to schedule and perform the Work, or to coordinate with the QA inspectors, results in excessive QA inspection costs, the State will backcharge such excess cost to the Contractor.
3. When non-destructive testing, Radiographic Testing (RT) or Ultrasonic Testing (UT), is required by the contract documents, it shall be performed by the State or its designated inspection laboratory, at the Owner's expense.
4. When QA inspection is made by the State, send 3 additional copies of required material certifications and mill test reports to the designated inspection laboratory, or to OGS Design & Construction, Division of Construction when no inspection laboratory has been designated.
5. Keep copies of the results of welder qualification test on file and make them available to the QA inspector upon request.
6. Do not ship structural steel, except anchor bolts and base plates, from the fabricating shop prior to QA inspection and approval by the State or designated inspection laboratory, unless such inspection is waived by the Director. A waiver of prior QA inspection and approval shall not reduce the Contractor's responsibility to provide structural steel in conformance with the Contract Documents.

1.08 WELDING PROCESSES

A. Use only shielded metal arc, submerged arc, or flux cored arc welding.

1.09 WELDING PROCEDURE QUALIFICATION

A. Shielded metal arc welding procedures which conform to the provisions of the AWS Code shall be considered to be prequalified.

B. The welding procedures for submerged arc and flux cored arc welding shall be qualified in accordance with the following subparagraphs. Welding, specimen preparation, specimen testing, and test results required shall be in accordance with Procedure Qualification Sheets A thru F. Welding and machining shall be at the fabricator's expense. Prepared specimens shall be turned over to the Owner for testing at the Owner's expense.

1. For welding procedures not previously approved by the Director, the test plate and required specimens shall be as shown on Procedure Qualification Sheet A.
2. For welding procedures previously approved by the Director, the test plate and required specimens shall be as shown on Procedure Qualification Sheet B.

3. To qualify a fillet welding procedure, the requirements of the appropriate foregoing subparagraph shall be met. In addition, a T-test fillet weld shall be made and tested in accordance with paragraph 5.10.3.1 of the AWS code.

C. Procedure Qualification Sheets A thru F will be supplied to the Contractor upon request.

1.10 DELIVERY, STORAGE, AND HANDLING

A. Deliver anchor bolts and other devices which are to be embedded in cast-in-place concrete or masonry construction, for anchorage of structural steel, one week prior to the start of that Work, unless otherwise required.

B. Receiving Shop Paint: Receive paint in original, unopened containers bearing paint manufacturer's printed label.
1. Label shall show manufacturer's name, trade name of paint, Federal Specification compliance (if applicable), shelf life, and date of manufacture.

C. Protection:
1. Upon delivery to the site, promptly cover and protect steel items (which are not required to receive shop paint) from rusting.
2. Store shop paint in accordance with paint manufacturer's printed instructions.

1.11 ENVIRONMENTAL REQUIREMENTS FOR SHOP PAINTING

A. Comply with the following conditions for the application of paint unless otherwise stated in the paint manufacturer's printed directions.
1. Minimum ambient, steel surface, and paint temperatures: 40 degrees F.
2. Maximum steel surface temperature: 100 degrees F.
3. Maximum relative humidity: 85 percent.
4. Surface of steel: Dry.

1.12 FIELD MEASUREMENTS

A. Take field measurements as required by drawings. Where possible, take field measurements of existing conditions prior to fabrication. Verify that field measurements are the same as those shown on drawings and shop drawings. Report all deviations to the Owner in writing.

PART 2 PRODUCTS

2.01 MATERIALS

A. Structural Steel: The minimum yield strength shall be 50 ksi conforming to the provisions of ASTM A992. For other shapes not available in ASTM A992, Steel shall have minimum yield strength of 36 ksi.

B. Steel for Anchor Bolts Shall Conform to the ASTM F1554, Grade 36, unless noted otherwise on the Contract Drawings.

C. Steel for Shims and Fillers: ASTM A569.

D. Exterior Lintels: ASTM A36, galvanized.

E. High-Strength Threaded Fasteners (High-Strength Bolts): ASTM A325 heavy hexagon structural bolts, nuts, and hardened washers.

F. Steel Pipe: ASTM A53, Type E or S, Grade B.

G. Steel Structural Tubing: ASTM A500, Grade B; or ASTM A501.

H. Weld Filler Metal:
   1. General: Weld filler metal shall be in accordance with Table 4.1.1 of the AWS Code, except as follows:
      a. Only electrode and flux combinations complying with AWS Classifications F7AX-EXXX or F7AX-EXXX-a, (a = B2, Ni1, Ni2, Ni3 or W), shall be used for submerged arc welding.
      b. Only electrode and shielding gas combinations complying with AWS Classifications E 7XT-1 or E 7XT-5 shall be used for flux cored arc welding.
   2. Weld filler metal for shielded metal arc welding which conforms to AWS Specifications A5.1 or A5.5 shall be considered to be prequalified.
   3. Weld filler metal for submerged arc and flux cored arc welding shall be qualified by performing the procedure qualification tests required under Part 1 of this Section.

I. Cold Galvanizing Compound: Single component compound giving 93 percent pure zinc in the dried film, and meeting the requirements of DOD-P-21035A (NAVY).

J. Shop Paint (General): Steel primer selected from the following:
   1. TNEMEC 10-99 (Red), 10-99G (Green) or 10-1009 (Gray).
   2. Rust-Oleum 769.
   3. Valspar 13-R-53.
   4. Sherwin-Williams “Kromik”.

K. Shop Paint for Galvanized Steel: FS TT-P-641, Type II.

L. Shop Paint for Exterior Equipment Supports (High-Ratio Water Based Zinc Silicate): Steel primer selected from the following:
   1. Inorganic Coatings IC 531.
   2. Valspar 13-F-6.

3. Ameron Dimetcote 21-7.

M. Bedding Mortar:

1. Cement Grout: Portland cement complying with ASTM C 150, Type I or III, and clean uniformly graded natural sand complying with ASTM C 404, size No. 2; mixed at a ratio (by volume) of 1.0 part cement to 3.0 parts sand, with only the minimum amount of water required for placement and hydration.
2. Shrink-Resistant Grout (Ferrous): Factory-packaged, non-catalyzed, ferrous aggregate mortar grouting compound selected from the following:
   a. Embeco 636 by Master Builders, 23700 Chagrin Blvd., Cleveland, OH 44122 (800) 227-3350.
   b. Ferrolith G-NC by Sonneborn, Chemrex, Inc., 57-46 Flushing Ave., Maspeth, NY 11378, (800) 433-9517.
   c. Ferro-Grout by L&M Construction Chemicals, 14851 Calhoun Rd., Omaha, NB 68152, (800) 362-3331.
   d. Vibra-Foil by A.C. Horn, Inc., Tamm Industries, 7405 Production Dr., Mentor, OH 44060, (800) 862-2667.
3. Shrink-Resistant Grout (Non-Staining): Factory-packaged, non-ferrous mortar grouting compound selected from the following:
   a. Masterflow 713 by Master Builders, 23700 Chagrin Blvd., Cleveland, OH 44122 (800) 227-3350.
   b. Sonogrout by Sonneborn, Chemrex, Inc., 57-46 Flushing Ave., Maspeth, NY 11378, (800) 433-9517.
   c. Five Star Grout by Five Star Products, Inc., 425 Stillson Rd., Fairfield, CT 06430, (800) 243-2206.
   d. Crystex by L&M Construction Chemicals, 14851 Calhoun Rd., Omaha, NB 68152, (800) 362-3331.
   e. Non-Corrosive, Non-Shrink Grout by A.C. Horn, Inc., Tamm Industries, 7405 Production Dr., Mentor, OH 44060, (800) 862-2667.

2.02 FABRICATION

A. Do not commence fabrication until the fabricator has been approved and the fabrication schedule has been coordinated with the designated Quality Assurance inspection agency (independent inspection laboratory or the Owner).

1. Give the Owner one week advance notice of the commencement of fabrication.

B. Progress shop fabrication from “Approved” or “Approved as Noted” detail drawings only.

1. When detail drawings are “Approved as Noted”, progress fabrication in strict accordance with notes thereon.
2. Fabrication progressed from “DISAPPROVED” or “RETURNED FOR CORRECTION” detail drawings will be rejected. The contractor shall have no claim against the Owner for any costs or delays due to rejection of items fabricated from “DISAPPROVED” or “RETURNED FOR CORRECTION” detail drawings.

C. Finish column ends at base plates and at load carrying cap plates to a true plane square to the column, with a maximum American National Standards Institute surface roughness value of 500 microinches.

D. Pipe and Tube Columns: Cap columns with a closure plate shop welded to the top of the columns to exclude water and foreign material from entering the column.

E. Loose Lintels: Loose lintels bearing on masonry or concrete shall have a minimum end bearing length of 6 inches at each end, unless otherwise noted.

F. Make provision for connections of other Work, including all cutting and punching of structural members where required by the Drawings, or for which information is furnished prior to approval of the shop drawings.

G. Weld and inspect steel studs in accordance with Section 7 of the AWS Code.

H. Remove extension bars or run-off plates upon the completion and cooling of groove welds. Grind the ends of the welds smooth and flush with the edges of the abutting parts.

I. Remove tack welds not incorporated into the final weld, and temporary welds. Grind affected surfaces smooth and flush.

J. Detail all fillet welded joints so as to permit the welding electrode or wire to be positioned at a minimum angle of 30 degrees from the face of any material upon which weld metal is to be deposited.

K. Prepare material in accordance with Section 3 of the AWS Code. Do not use gas or air carbon-arc cutting to cut or enlarge bolt holes.

2.03 GALVANIZING

A. Unless otherwise specified or noted, items indicated to be galvanized shall receive a zinc coating by the hot-dip process, after fabrication, complying with the following:
   1. ASTM A123 for plain and fabricated material.
   2. ASTM A153 for iron and steel hardware.

2.04 SHOP PAINTING

A. Thoroughly clean all structural steel. Remove oil, grease, and similar contaminants in accordance with SSPC SP-1 “Solvent Cleaning”. Remove loose mill scale, loose rust, weld slag and spatter, and other detrimental material in

accordance with SSPC SP-2 “Hand Tool Cleaning”, SSPC SP-3 “Power Tool Cleaning

1. Thoroughly clean structural steel receiving sprayed-on fireproofing in accordance with recommendations of the manufacturer of the fireproofing material approved for use on this Project.

B. Galvanized Items:

1. Galvanized items which are to be finish painted shall be rinsed in hot alkali or in an acid solution and then in clear water.
2. Welded and abraded galvanized surfaces shall be wire brushed and repaired with a coating of cold galvanizing compound applied in accordance with compound manufacturer’s instructions.

C. Do not paint galvanized items which are not to be finish painted.

PART 3 EXECUTION

3.01 ERECTION

A. Verify that field conditions are acceptable and that erection may proceed. Notify the Owner in writing of conditions that adversely affect the work. Do not proceed with erection until conditions have been corrected. Beginning of installation means the erector accepts existing conditions.

B. Erect steel in accordance with the AISC Specification, the AISC Code, the AWS Code and the Specification for Structural Joints, except as otherwise specified.

C. Prepare and place shrink-resistant grout in accordance with grout manufacturer’s printed instructions.

1. Comply with manufacturer’s instructions for preparation of surfaces in contact with the grout, and for curing and protection of the grout.

D. Install and inspect steel studs in accordance with Section 7 of the AWS Code.

E. Remove extension bars and run-off plates upon the completion and cooling of groove welds. Grind the ends of the welds smooth and flush with the edges of the abutting parts.

F. Remove tack welds not incorporated into the final weld, and temporary welds. Grind affected surfaces smooth and flush.

G. Delete Paragraph M2.2 of the AISC Specification. Prepare material in conformance with Section 3 of the AWS Code. Do not use gas or air carbon-arc cutting to cut or enlarge bolt hole.

H. Do not make corrections or alterations to fabricated steel without prior written approval by the Owner.

I. Employ a licensed professional engineer to ensure accurate erection of steel.

J. Temporary Shoring and Bracing: Provide temporary shoring and bracing members with connections of sufficient strength to bear erection loads and guy wires to maintain structure plumb and in true alignment until completion of erection. Remove temporary work when permanent members and bracing are in place and final connections are made.

K. Anchor Bolts:
1. Furnish to the concrete and brick masons anchor bolts and other connectors required for securing structural steel to the foundation and other in place concrete work, together with instructions, templates, etc. necessary for setting them. Anchor bolts are to be surveyed and any approved modifications made prior to placement of columns.
2. Tighten anchor bolts after support members have been positioned and plumbed. Cut off protruding edges of wedges or shims flush with the edge of base or bearing plate prior to packing with grout.

L. Base and Bearing Plates
1. Clean concrete and masonry bearing surfaces of loose and bond-reducing materials.
2. Set loose any attached base plates and bearing plates for structural members on shims and other adjusting devices, such as leveling plates within specified tolerances. Elevations of shims and leveling plates shall be surveyed and adjusted to correct elevation prior to placement of column or beam. Plates are to have grout holes.
3. Grouting under plates is to be done prior to placement of any concrete on the structure.

M. Field Assembly:
1. Erect structural frames accurately to lines and elevations indicated. Align and adjust members forming a part of a complete frame or structure before permanently fastening.
2. Clean bearing surfaces and other surfaces that will be in permanent contact before assembly.
3. Perform necessary adjustments to compensate for discrepancies in elevations and alignment.
4. Level and plumb individual members of the structure within specified tolerances. Do not tighten structure until surveys verify that structure is within allowable tolerances.
5. Establish required leveling and plumbing measurements on mean operating temperature of structure. Make allowances for difference between temperature at which structure will be when completed and in service.
6. Splice members only where indicated and accepted on shop drawings.

N. Erection tolerances shall be in accordance with “Code of Standard Practice for Steel Buildings and Bridges”, except as indicated in B below.

O. The following overall maximum deviations (tolerances) from the theoretical are permitted:

a. Column location @ base plate: ½”
b. Base Plate, bearing plate and column splice elevation: ±1/8”

c. Column Plumbness: in or out ¾” in column length, 1 ¼” for total building height
d. Beam or girder elevation: ±1/2”
e. Beam camber: 1/8”
f. Lintel elevation: ±1/16”, lintel location ±1/4”

3.02 SCHEDULE OF GALVANIZED STRUCTURAL STEEL

A. In addition to members indicated on the Drawings, hot-dip galvanize structural steel members as indicated below:
1. All loose lintels in exterior walls.
2. Nuts, washers and the top 12 inches of exterior anchor bolts.

B. Two shop coats of High-Ratio Water Based Zinc Silicate paint may be substituted in lieu of hot-dip galvanizing.

3.03 FIELD QUALITY CONTROL

A. Cooperate with Special Inspector and the Testing Laboratory performing Special Inspection testing.

B. As per section BC 1704.3, the Special Inspector will inspect erection of the structural framework and test field bolting and welding as listed in Part 2 of this Section. The Special Inspector will also check the welding of deck and metal studs described in section 053100.

C. The Contractor shall engage an engineer licensed in the state of New York to check tolerances and inspect the erection.

D. Contractor’s Surveys: Provide surveys of items listed below. Surveys are to indicate the actual location and elevation and the deviation from theoretical. Highlight those numbers that exceed permissible tolerances. Surveys are to be submitted in a timely manner in order for corrections to be made prior to installation of the next item in sequence (e.g. anchor bolt and base plate survey prior to column installation), including placement of concrete. The following items are to be surveyed:
1. Anchor bolt location
2. Elevation of bottom of base plates (top of shims or leveling plate).
3. Elevation of lowest column splice.
4. Location (x,y & radical) and plumbness of columns
5. Elevation of steel members taken at approximately 20 members from each floor for those members not cambered.

END OF SECTION

SECTION 221100

PLUMBING PIPING

PART 1 GENERAL

1.01 RELATED WORK SPECIFIED ELSEWHERE

A. Through Penetration Firestops: Section 078400.

B. Sealants: Section: 079200.

C. Pipe and Pipe Fittings: 232000

1.02 REFERENCES

A. American Society for Testing and Materials (ASTM)

B. American Standards Association (ASA)

C. American National Standards Institute (ANSI)

D. United States of America Standards Institute (USASI)

E. Cast Iron Soil Pipe Institute (CISPI)

F. American Water Works Association (AWWA)

G. NSF International

1.03 SUBMITTALS

A. Product Data:
   1. Catalog sheets and specifications indicating manufacturer name, type, applicable reference standard, schedule, or class for specified pipe and fittings.
   2. Material Schedule: Itemize pipe and fitting materials for each specified application in Pipe and Fittings Schedule in Part 3 of this Section. Where optional materials are specified indicate option selected.

B. Quality Control Submittals
   1. Brazer Qualification Data: Copies of certification; include names, home addresses and social security numbers of brazers.

1.04 QUALITY ASSURANCE

A. Qualification of Brazers: Comply with the following:
   1. The persons performing the brazing and their supervisors shall be personally experienced in brazing procedures.

2. All pipes ,fittings, which convey water consumption shall be lead free as defined in the " Reduction of Lead in Drinking Water ACT"

PART 2 PRODUCTS

2.01 STEEL PIPE AND FITTINGS

A. Steel Pipe for Threading: Standard weight, Schedule 40, black or galvanized; ASTM A 53 or ASTM A 135.

B. Malleable Iron, Steam Pattern Threaded Fittings:
   1. 150 lb Class: ASME B16.3.
   2. 300 lb Class: ASME B16.3.

C. Cast Iron Fittings:
   1. Drainage Pattern, Threaded: ASME B16.12.
   2. Steam Pattern, Threaded: ASME B16.4.
      a. Standard Weight: Class 125.
      b. Extra Heavy Weight: Class 250.
   3. Flanged Fittings and Threaded Flanges: ASME B16.1.
      a. Standard Weight: Class 125.
      b. Extra Heavy: Class 250.

D. Unions: Malleable iron, 250 lb class, brass to iron or brass to brass seats.

E. Couplings: Same material and pressure rating as adjoining pipe, conforming to standards for fittings in such pipe. Use taper tapped threaded type in screwed pipe systems operating in excess of 15 psig.

F. Nipples: Same material and strength as adjoining pipe, except nipples having a length of less than one inch between threads shall be extra heavy.

2.02 COPPER AND BRASS PIPE, TUBING AND FITTINGS

A. Copper Tube, Types K, L, and M: ASTM B 88.

B. Copper Tube for Medical Gas, Type K: ASTM B 819.

C. Wrot Copper Tube Fittings, Solder Joint: ASME B16.22.

D. Cast Copper Alloy Tube Fittings, Solder Joint: ASME B16.18.

E. Drainage Tube, Type DWV: ASTM B 306.

F. Wrot Copper Drainage Tube Fittings, Solder Joint: ASME B16.29.

G. Cast Copper Alloy Drainage Fittings, Solder Joint: ASME B16.23.

H. Chrome Plated Grade A Red Brass Threaded Pipe, Standard Weight: ASTM B 43.
   1. Plating: 0.02 mil chromium over 0.2 mil nickel plating, high polish finish.

I. Chrome Plated Cast Brass Threaded Pipe Fittings, 125 lb Class: ASME B16.15.
   1. Plating: 0.02 mil chromium over 0.2 mil nickel plating, high polish finish.

J. Unions: Cast bronze, 150 lb Class, bronze to bronze seats, threaded or solder joint.

K. Plumber's Tube: Seamless, semi-annealed, minimum 65 percent copper, No. 18 B & S Gage.

L. Flared Tube Fittings:
   1. Water Tube Type: ASME B16.26.
   2. Refrigerant Tube Type: SAE J513.

M. Flanges: Conform to the Standards for fittings used in systems.
   1. Brazing Flanges: ASME B16.24, hubs modified for brazing ends.

N. Acceptable Manufacturers: Elkhart, Mueller, Viega

2.03 CAST IRON PIPE AND FITTINGS

A. Bell and Spigot Soil Pipe: Service Weight, Bitumin coated; ASTM A 74.

B. Bell and Spigot Soil Pipe Fittings: Service Weight, Bitumin coated; ASTM A 74.

C. Hubless Pipe: Bitumin coated; Cast Iron Soil Pipe Institute Standard No. 301.

D. Hubless Pipe Fittings: Drainage Pattern, Bitumin coated; Cast Iron Soil Pipe Institute Standard No. 301.

E. Hubless Joint Couplings: Heavy Duty Stainless steel shield and clamp assembly, 4 band coupling and elastomeric sealing sleeve; CISPI-310.

F. Water Pipe Fittings: Bitumin coated, cement-mortar lined; AWWA C110.

G. Acceptable Manufacturers: Charlotte Pipe, Tyler Pipe

2.04 DUCTILE IRON PIPE AND FITTINGS

A. Water Pipe: Bitumin coated and cement-mortar lined; AWWA C151.
   1. 3 and 4 Inch Sizes: Class 51.
   2. 6 inch Size and Over: Class 50.

B. Fittings: Bitumin coated and cement-mortar lined; AWWA C110.

C. Acceptable Manufacturers: Charlotte Pipe, Tyler Pipe

2.05 JOINING AND SEALANT MATERIALS

A. Thread Sealant:
   1. LA-CO Industries', Slic-Tite Paste with Teflon.
   2. Loctite Corp.'s No. 565 Thread Sealant.
   3. Thread sealants for potable water shall be NSF approved.

B. Thread Sealant (Natural Gas Piping): Rectorseal Corp.'s T Plus 2 non-hardening pipe dope with teflon.

C. Fuel Resistant Thread Sealant:
   1. Rectorseal Corp.'s Rectorseal No. 5.
   2. EMCO Wheaton Inc.'s Joint Seal.

D. Solder: Solid wire type conforming to the following:
   1. Type 3: Lead-free tin-silver solder (ASTM B 32 Alloy Grade E, AC, or HB); Engelhard Corp.'s Silvabrite 100, Federated Fry Metals' Aqua Clean, or J.W. Harris Co. Inc.'s Stay-Safe Bridgit.

E. Soldering Flux for Soldered Joints: All-State Welding Products Inc.'s Duzall, Engelhard Corp.'s General Purpose Liquid or Paste, Federated Fry Metals' Water Flow 2000, or J.W. Harris Co. Inc.'s Stay-Clean.

F. Brazing Alloys:
   1. Type 1: AWS A5.8, Class BCuP-5, for brazing copper to brass, bronze, or copper; Engelhard's Silvaloy 15, J.W. Harris Co. Inc.'s Stay-Silv 15, and Handy & Harman's Sil-Fos.
   2. Type 2: AWS A5.8, Class BAg-7, for brazing copper to steel or stainless steel; Engelhard's Silvaloy-56T, J.W. Harris Co. Inc.'s Safety-Silv 56, and Handy & Harman's Braze 560.

G. Brazing Flux: FS O-F-499, Type B; Handy & Harman's Handy Flux or J.W. Harris Co. Inc.'s Stay-Silv.

H. Lead for Calking Joints in Cast Iron Soil Pipe: ASTM B 29 for pig lead.

I. Joint Packing:
   1. Oiled Oakum: Manufactured by Nupak of New Orleans, Inc., 931 Daniel St., Kenner, LA 70062, (504) 466-1484.
   2. Acid Resistant Joint Packing: Sealite Inc.'s Red Stripe, Asbestos-Free Acid-Resistant White Oakum, No. 312.

J. Gaskets For Use With Ductile Iron Water Pipe and Cast Iron Drainage Pipe: Synthetic rubber rings (molded or tubular): Clow Corp.'s Belltite, Tyler Pipe Industries Inc.'s Ty-Seal, or U.S. Pipe and Foundry Co.'s Tyton.

K. Flange Gasket Material:
   1. For Use with Cold Water: 1/16 inch thick rubber.
   2. For Use with Hot Water, Air or Steam: Waterproofed non-asbestos ceramic or mineral fiber, or a combination of metal and water-proofed non-asbestos ceramic or mineral fiber, designed for the temperatures and pressures of the piping systems in which installed.

L. Anti-Seize Lubricant: Bostik Inc.'s Never Seez or Dow Corning Corp.'s Molykote 1000.

M. Corrosion Protective Tape System: By 3M Co., St. Paul, MN.
   1. Tape: Scotchrap 50 or 51.
   2. Primer: Scotchrap pipe primer.
   3. Putty (if required): Strip Caulk insulation putty.

2.06 PACKING MATERIALS FOR BUILDING CONSTRUCTION PENETRATIONS

A. Oiled Oakum: Manufactured by Nupak of New Orleans, Inc., 931 Daniel St., Kenner, LA 70062, (504)466-1484.

B. Mechanical Modular Seals: Thunderline Corp.'s Link Seal wall and floor seals designed for the service of piping system in which installed.

2.07 DIELECTRIC CONNECTORS

A. Dielectric Fitting: Bronze ball valve with end connections and pressure rating to match associated piping.
   1. Nipples with inert non-corrosive thermoplastic linings are not acceptable.

B. Flange Electrical Insulation Kit: Consisting of dielectric sleeves and washers, and dielectric gasket.
   1. Rated 150 psi at 250 degrees F: ANSI Class 150, full faced neoprene gasket with bolt holes, double phenolic washers, and mylar sleeves; Model 150 by APS, Lafayette, LA 70596, (337) 233-6116.

2.8 PIPE SLEEVES

A. Type A: Schedule 40 steel pipes.

B. Type B: No. 16 gage galvanized sheet steel.

C. Type C: Schedule 40 steel pipe with 1/4 inch steel collar continuously welded to pipe sleeve. Size steel collars as required to span a minimum of one cell or corrugation, on all sides of the rough opening thru the metal deck.

D. Type D: No. 16 gage galvanized sheet steel with 16 gage sheet steel metal collar rigidly secured to sleeve. Size metal collars as required to span a minimum of one cell or corrugation, on all sides of the rough opening thru the metal deck.

2.9 FLOOR, WALL AND CEILING PLATES

A. Cast Brass: Solid type with polished chrome plated finish, and set screw.
   1. Series Z89 by Zurn, 929 Riverside Drive, Grosvenordale, CT 06255, (800) 243-1830.
   2. Model 127XXXX by Maguire Mfg., Cheshire CT 06410, (203) 699-1801.

B. Stamped Steel: Split type, polished chrome plated finish, with set screw.
   a. Figures 2 and 13 by Anvil International, Portsmouth, NH 03802, (603) 422-8000.

C. Cast Iron or Malleable Iron: Solid type, galvanized finish, with set screw:
   1. Model 395 by Anvil International, Portsmouth, NH 03802, (603) 422-8000.
   2. Model 900-016XX by Landsdale International, Westville, NJ 08093, (800) 908-0523.

   2. Multi layer nylon 12 inner layer with stainless swage couplers or clamshell fittings; APT's XP-SC.

2.10 TEST BOOTS

A. Test boots complete with stainless steel clamps, and air valve stem for tightness testing.
   1. Flexible Nitrile Rubber: OPW TBA series, or APT STB or STB-SW series.
   2. Flexible Pelethane (Filled with Petroseal Paste): Blue-Line Model Quick Fit series.

PART 3 EXECUTION

3.01 INSTALLATION

A. Install piping at approximate locations indicated, and at maximum height.

B. Install piping clear of door swings, and above sash heads.

C. Make allowances for expansion and contraction.

D. Allow for a minimum of one inch free air space around pipe or pipe covering, unless otherwise specified.

E. Install horizontal piping with a constant pitch, and without sags or humps.
   1. Water Piping: Pitch 1/4 inch per 10 feet upward in direction of flow, unless otherwise noted. If it is not possible to maintain constant pitch, establish a new low point and continue. At the low point, provide a 1/2 inch drip leg and gate valve with a hose bibb end. Provide an air vent at the high point.

2. Drainage Piping: Pitch 1/4 inch per foot downward, in direction of flow, unless otherwise noted.
3. Vent Piping: Pitch 1/4 inch per foot upward, unless otherwise noted.

F. Install vertical piping plumb.

G. Use fittings for offsets and direction changes, except for Type K soft annealed copper temper water tube.

H. Cut pipe and tubing ends square; ream before joining.

I. Threading: Use American Standard Taper Pipe Thread Dies.
1. Thread brass pipe with special brass threading dies.

3.02 DRAINAGE SYSTEMS

A. Fittings:
1. Use long turn drainage pattern fittings, unless space conditions prohibit their use; in such cases, short turn pattern fittings may be used.
2. Vertical Offsets: Make vertical offsets with 45 degree elbows, or 1/8 bends.
3. Tucker Fittings: Tucker fittings may only be installed in vertical piping.

B. Cleanouts:
1. Install cleanouts with sufficient side and end clearance to allow for the removal of the cleanout plug, and the use of cleaning tools.
2. Lubricate cleanout plugs with anti-seize lubricant.

3.03 DOMESTIC WATER PIPING SYSTEM

A. Connect runouts to the upper quadrant of the main, and run upward at not less than 45 degrees before extending laterally.

B. Make final connections to plumbing fixtures and equipment with unions, or flanges:
1. Do not use unions in ferrous piping larger than 3 inches.
2. Do not use unions in brass or copper piping larger than 2 inches.

3.04 PIPE JOINT MAKE-UP

A. Threaded Joint: Make up joint with a pipe thread compound applied in accordance with manufacturer's printed application instructions for the intended service.
1. Chrome Plated Brass Pipe: Tighten joint with a strap or Parmalee wrench; do not mar pipe finish. Install piping so that no threads are visible.

B. Soldered Joint: Thoroughly clean tube end and inside of fitting with emery cloth, sand cloth, or wire brush. Apply flux to the pre-cleaned surfaces. Install fitting,

heat to soldering temperature, and join the metals with type solder specified. Remove residue.

C. Flanged Pipe Joint:
   1. Install threaded companion flanges on steel pipe; flanges on galvanized pipe are not required to be galvanized.
   2. Provide a gasket for each joint.
      a. Hot Water Pipe Gasket: Coat with a thin film of oil before making up joint.
      b. Air Pipe Gasket: Coat with a thin film of oil before making up joint.
   3. Coat bolt threads and nuts with anti-seize lubricant before making up joint.

D. Calked Joint: Pack hub with joint packing specified, and calk. Run 12 ounces molten lead for each inch of pipe diameter. Calk cooled lead ring and face off smoothly.

E. Rubber Ring Push-on Joint: Clean hub, bevel spigot, and make up joint with lubricated gasket in conformance with the manufacturer's printed installation instructions.

F. Hubless CI Pipe Joint: Make up joint with hubless fitting and couplings, in conformance with the manufacturer's printed installation instructions.

G. Brazed Joint: Thoroughly clean tube end and inside of fitting with emery cloth, sand cloth, or wire brush. Apply flux to the pre-cleaned surfaces. Install fitting, heat to brazing temperature, and join the metals with brazing alloy. Remove residue.

H. Mechanical Joint: Make up joint in conformance with the manufacturer's printed installation instructions, with particular reference to tightening of bolts.

   1. Joining Bell and Spigot and Threaded Pipe: Install a half coupling on the pipe or tube end to form a spigot, and calk into the cast iron bell.
   2. Joining Dissimilar Threaded Piping: Make up connection with a threaded coupling or with companion flanges.
   3. Joining Dissimilar Non-Threaded Piping: Make up connection with adapters recommended by the manufacturers of the piping to be joined.
   4. Joining Galvanized Steel Pipe and Copper Tubing: Make up connection with a dielectric connector.
   5. Joining FRP and Threaded Pipe: Make up connection with adapters as recommended by manufacturers of piping being joined.

3.05 PIPING PENETRATIONS

A. Sleeve Schedule: Unless otherwise shown, comply with the following schedule for the type of sleeve to be used where piping penetrates wall or floor construction:

	CONSTRUCTION	SLEEVE TYPE
1.	Frame construction.	None Required
2.	Foundation walls.	A*
3.	Non-waterproof interior walls.	B*
4.	Non-waterproof interior floors on metal decks.	D*
5.	Non-waterproof interior floors not on metal decks.	B*
6.	Floors not on grade having a floor drain.	A
7.	Floors over mechanical equipment, steam service, machine, and boiler rooms.	A
8.	Floors finished or to be finished with latex composition or terrazzo, and on metal decks.	D*
9.	Floors finished or to be finished with latex composition or terrazzo, and not on metal decks.	A
10.	Earth supported concrete floors.	None Required
11.	Exterior concrete slabs on grade.	A
12.	Fixtures with floor outlet waste piping.	None Required
13.	Metal roof decks.	C
14.	Non-metal roof decks.	A
15.	Waterproof floors on metal decks.	D
16.	Waterproof floors not on metal decks.	A
17.	Waterproof walls.	A

*Core drilling is permissible in lieu of sleeves where marked with asterisks.

B. Diameter of Sleeves and Core Drilled Holes:
   1. Unless otherwise specified, size holes thru floors and walls in accordance with the through penetration fire stopping system being used.
   2. Size holes thru exterior walls or waterproofed walls above inside earth or finished floors, and exterior concrete slabs in accordance with the following:
      a. Uninsulated (Bare) Pipe: Inside diameter of sleeve or core drilled hole 1/2 inch greater than outside diameter of pipe, unless otherwise specified.
      b. Insulated Pipe: Inside diameter of sleeve or core drilled hole 1/2 inch greater than outside diameter of insulation, unless otherwise specified.
      c. Mechanical Modular Seals: Size holes in accordance with the manufacturer's recommendations.
   3. Size holes for sprinkler and fire standpipe piping in accordance with NFPA 13.

C. Length of Sleeves (except as shown otherwise on Drawings):
   1. Walls and Partitions: Equal in length to total finished thickness of wall or partition.

2. Floors with Finish: Equal in length to total finished thickness of floor and extending 1/2 inch above the finished floor level, except as follows:
   a. In furred spaces at exterior walls, extend sleeve one inch above the finished floor level.

3. Exterior Concrete Slabs: Equal in length to total thickness of slab and extending 1/2 inch above the concrete slab.

4. Roofs: Equal in length to the total thickness of roof construction, including insulation and roofing materials, and extending one inch above the finished roof level.

D. Packing of Sleeves and Core Drilled Holes:
   1. Unless otherwise specified, pack sleeves or cored drilled holes in accordance with Section 078400 - FIRESTOPPING.

   2. Pack sleeves in exterior walls or waterproofed walls above inside earth or finished floors with oakum to within 1/2 inch of each wall face, and finish both sides with Type 1C (one part) sealant. See Section 079200.
      a. Mechanical modular seals may be used in lieu of packing and sealant for sleeves and core drilled holes.
   3. Pack sleeves in exterior concrete slabs with oakum to full depth, and within 1/2 inch of top of sleeve and finish the remainder with sealant. See Section 079200.
      a. Sealant Types:
         1) Piping Conveying Materials up to 140 degrees F other than Motor Fuel Dispensing System Piping: Type 1C (one part).

      b. Mechanical modular seals may be used in lieu of packing and sealant for sleeves and core drilled holes.

E. Weld metal collars of Type C and D sleeves to the upper surface of the metal deck. Seal voids under the metal collar as recommended by the manufacturer of the metal deck.

3.06 FLOOR, WALL AND CEILING PLATES

A. Install plates for exposed uninsulated piping passing thru floors, walls, ceilings, and exterior concrete slabs as follows:
   1. In Finished Spaces:
      a. Piping 4 Inch Size and Smaller: Solid or split, chrome plated cast brass.
      b. Piping over 4 Inch Size: Split, chrome plated cast brass.
   2. Unfinished Spaces (Including Exterior Concrete Slabs): Solid, unplated cast iron.
   3. Fasten plates with set screws.
   4. Plates are not required in pipe shafts or furred spaces.

3.07 PIPE AND FITTING SCHEDULE

A. Where options are given, choose only one option for each piping service. No deviations from the selected option will be allowed.

. B. Domestic Water (Above Ground):

1. 3 inch and Under: Type L hard drawn copper tube, with cast copper alloy or wrot copper solder type fittings, and joints made up with Type 3 solder.

2. 4 inch and over:) Pipe: Ductile iron pipe, double cement lined, ANSI/AWWA C150, C151, AWWA C104, ANSI A21.4, minimum special thickness class 52 or minimum pressure class 250.

Fittings: Ductile iron, double cement lined, ANSI/AWWA C110, or C153, AWWA C104/ANSI A21.4, minimum special thickness Class 52 or minimum pressure class 250. Flanged joints.

C. Domestic Water (Below Ground):

1. 2-1/2 inches and under: Type K soft annealed copper tube with water tube type flared fittings.
2. 3 inches and over: Coated ductile iron water pipe and fittings, with mechanical or push-on joints.

D. Drainage (Sanitary) Above Ground:

1. Hubless, coated, cast iron pipe, fittings, and joint couplings.

E. Drainage (Storm) Above Ground:

1. Option No. 1: Standard weight galvanized steel pipe, with galvanized cast iron drainage pattern fittings, and threaded joints.
2. Option No. 2: Hubless, coated, cast iron pipe, fittings and joint couplings.

F. Drainage Piping (Below Ground):

1. Option No. 1: Service weight, coated, cast iron bell and spigot pipe and fittings, with calked joints.
2. Option No. 2: Service weight, coated, cast iron bell and spigot pipe and fittings, with rubber ring push-on joints.

G. Vent Piping: Same materials that are used for piping system to which vent is connected.

H. Steam Piping: Piping and Fittings shall comply with the Mechanical Specification: 232000

3.08 TRAINING

A. Demonstrate the operation and maintenance of all system components to the Director's representative. Schedule in coordination with the Director, a training period for the Director's staff or designated appointees. This training period shall be a minimum of four (4) hours per shift for 2 shifts (8 hours total). Training shall encompass entire scope for the system, including operation, adjustment, maintenance, and troubleshooting, until completely understood. Submit names and period of attendance of those instructed.

END OF SECTION

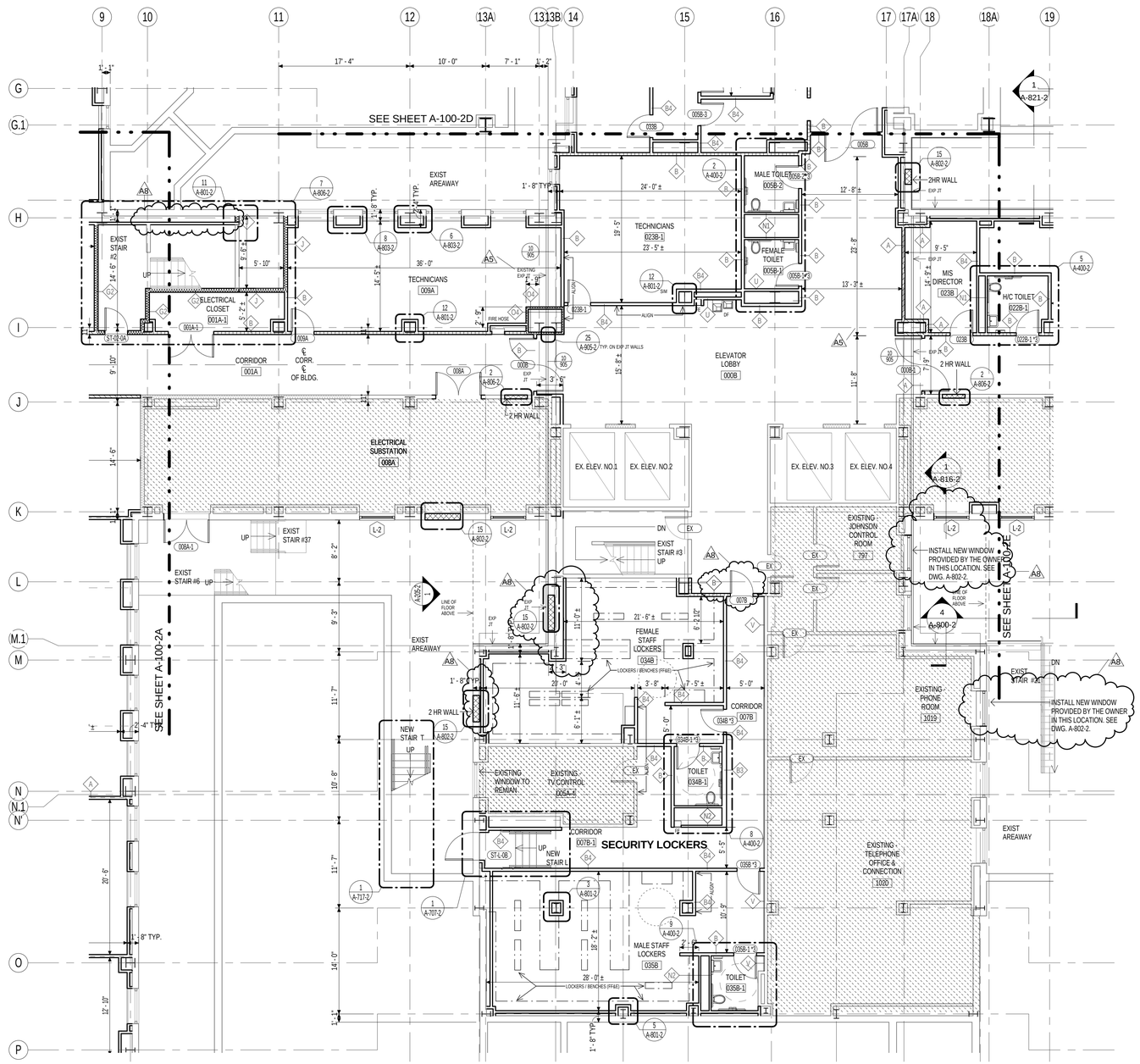

1 BASEMENT FLOOR PLAN, PART "C"

NOTE: ALL PARTITIONS TO BE TYPE "B" U.N.O.

SYMBOLS

- 1HR FIRE RATED PARTITION
- 2HR FIRE RATED PARTITION
- SMOKE PARTITION
- SMOKE BARRIER
- A5 MASONRY INFILL
- NON RATED PARTITION
- EXISTING PARTITION
- INDICATES EXISTING SPACES TO REMAIN
- INDICATES SHAFT OPENINGS TO BE SAW CUT IN THIS CONTRACT: FOR ACTUAL SCOPE & DETAILS, SEE STRUCTURAL DRAWINGS FOR THIS CONTRACT AND BP-1 REFERENCE DRAWINGS.
- INDICATES EXISTING OPENING

GENERAL NOTES

1. ALL EXISTING DIMENSIONS TO BE VERIFIED IN FIELD.
2. ALIGN PARTITION WITH WINDOW JAMB
3. REFER TO WINDOW CONDITIONS ON A-802.
4. A8 FOR ALL EXTERIOR WALLS TO GET WALL FURRING, SEE DWGS: A-801-2, A-802-2 & A-803-2
5. FOR BORROWED LIGHT(BL) ELEVATIONS SEE A-812, FOR DETAILS SEE A-906
6. CONTRACTOR TO PATCH EXISTING ROOFS AT NEW MECHANICAL PENETRATIONS INCLUDING NEW RAILING.
7. CONTRACTOR TO COORDINATE LOCATION OF PREFABRICATED EQUIPMENT CURBS WITH MECHANICAL EQUIPMENT SHOWN IN MECHANICAL DRAWINGS.
8. STRIKE SIDE OF THE DOOR IS 6" TYP. U.O.N.
9. DIMENSION IS BASED ON THE FINISHES FACE OF NEW OR EXISTING WALLS.
10. FOR SUB-BASEMENT MEP 2HR SEPARATION WALL SEE DWG A-811A
11. A8 NEW KNOCK DOWN DOOR FRAMES ARE TO BE PLACED IN AN EXISTING MASONRY OPENINGS.
12. REMOVE EXISTING FRAME AND INSTALL 3 PIECE KNOCK DOWN FRAME AS PER MANUFACTURES INSTRUCTION TO MEET THE REQUIRED FIRE RATING. SEE DOOR SCHEDULE FOR RATING OF THE DOOR.
13. FILL OPEN TRANSOM AND TRANSOM SPACE WITH MASONRY TO MATCH SURROUNDING WALL CONSTRUCTION. SEE A-806-2.
14. PATCH MISCELLANEOUS SMALL OPENINGS OVER EXISTING WINDOWS WITH MORTAR.

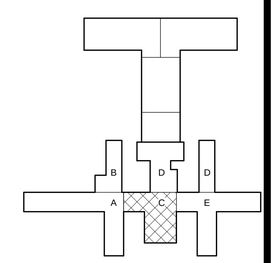

PROJECT NORTH

0 4' 8' 16'
SCALE: 1/8" = 1'-0"

REVISED DRAWING 09/24/2015

NEW YORK STATE OF OPPORTUNITY. Office of General Services

DESIGN & CONSTRUCTION

CONSULTANTS:

RBSD ARCHITECTS P.C. | STV 100 Years

A Joint Venture
225 Park Avenue South
New York, New York 10003

WARNING:
THE ALTERATION OF THIS MATERIAL IN ANY WAY, UNLESS DONE UNDER THE DIRECTION OF A COMPARABLE PROFESSIONAL, I.E. ARCHITECT FOR AN ARCHITECT, ENGINEER FOR AN ENGINEER OR LANDSCAPE ARCHITECT FOR A LANDSCAPE ARCHITECT, IS A VIOLATION OF THE NEW YORK STATE EDUCATION LAW AND/OR REGULATIONS AND IS A CLASS 'A' MISDEMEANOR.

REGISTERED ARCHITECT WILLIAM B. BALAN STATE OF NEW YORK

CONTRACT: CONSTRUCTION

TITLE: MAJOR BUILDING RENOVATIONS FOR THE MANHATTAN FORENSIC RELOCATION

LOCATION: MANHATTAN PSYCHIATRIC CENTER, BUILDING No. 102
600 EAST 125TH STREET WARDS ISLAND, NY10035

CLIENT: NYS OFFICE OF MENTAL HEALTH

MARK	DATE	DESCRIPTION
A8	09-24-2015	ADDENDUM # 8
A6	09-03-2015	ADDENDUM # 6
A5	08-12-2015	ADDENDUM # 5
	6-15-2015	BID DOCUMENT

PROJECT NUMBER: 44578
DESIGNED BY: MAK / WW
DRAWN BY: LR / LM / WW / JS / JM / DF / YB / YK
FIELD CHECK: N/A
APPROVED: WS / MAK / LF

SHEET TITLE: BASEMENT FLOOR PLAN, PART "C"

BUILDING NUMBER: 102
DRAWING NUMBER: A-100-2C
SHEET

9/23/2015 7:18:39 PM

MATERIAL	QUANTITY
ACOUSTIC CEILING TILES	3,506ft²
PLASTER CEILING	11,827ft²
GYPSUM BOARD WALLS	151ft²
CERAMIC TILE FLOOR	1,324ft²

IMPORTANT NOTE: ALL QUANTITIES LISTED ON THE DRAWINGS ARE ESTIMATES AND ARE FOR INFORMATION ONLY. THE CONTRACTOR IS RESPONSIBLE FOR REMOVING ALL MATERIALS SHOWN ON THE DRAWINGS TO BE REMOVED, WHETHER THEY ARE GREATER OR LESS THAN THE QUANTITIES LISTED ON THIS SCHEDULE OR ANYWHERE ELSE ON THE DRAWINGS OR IN THE SPECIFICATIONS. NOT ALL THE MATERIALS TO BE REMOVED ARE NOTED HERE. REFER TO THE PLANS AND THE PLAN NOTES FOR ALL THE MATERIALS THAT SHALL BE REMOVED. REFER ALSO TO NOTE GN-1 ON THIS DRAWING. REFER TO 'LEGEND KEY' ON DRAWING NUMBER A-002. REFER TO DRAWING NUMBER A-104 FOR: HVAC, PLUMBING AND ELECTRIC MATERIALS QUANTITIES.

GENERAL NOTES - ELECTRICAL:

REFER TO DRAWING NUMBER A-103.
ALL THOSE NOTES APPLY TO THIS DRAWING.

WINDOW NOTES:

FW – FURNISHED WINDOW (ALUMINUM SECURITY WINDOW FURNISHED BY OMH)

PLAN NOTES - ACCESS CORRIDOR ONLY ⟨#⟩ :

⟨1⟩ DOOR, FRAME AND HARDWARE TO REMAIN.

⟨2⟩ FILL DOOR OPENING: PROVIDE 3⅝", 22 GAUGE, GALVANIZED STEEL STUDS @ 16" O.C. MAXIMUM SPACING; 3⅝", 22 GAUGE GALVANIZED RUNNERS TOP AND BOTTOM; ⅝" F.R. GYPSUM WALL BOARD EACH SIDE; SPACKLE, TAPE AND SAND BOTH SIDES; PAINT WITH TWO COATS ON CORRIDOR SIDE ONLY; FINISH FACE OF FILL TO BE FLUSH WITH FINISH FACE OF EXISTING DOOR FRAME.

⟨3⟩ EXISTING PARTIAL HEIGHT WALL HERE. PROVIDE WALL FROM TOP OF EXISTING PARTIAL HEIGHT WALL TO UNDERSIDE OF EXISTING CONCRETE FLOOR STRUCTURE ABOVE. WALL CONSTRUCTION SAME AS PLAN NOTE 2 ABOVE INCLUDING FINISH.

ACCESS CORRIDOR NOTES:

AC–1 THIS IS AN OCCUPIED FLOOR. THIS CORRIDOR MUST REMAIN FREE, CLEAR AND UNOBSTRUCTED THROUGHOUT THE DURATION OF THIS PROJECT.

AC–2 EXISTING CEILINGS AND LIGHTS TO REMAIN UNDISTURBED IN ACCESS CORRIDOR.

AC–3 BARRIERS AND ENCLOSURES: PROVIDE TEMPORARY PARTITION WITH 2'–10"W x 7'–0'H DOORS, FRAMES AND HARDWARE, THREE (3) DOORS TOTAL. CONSTRUCT PARTITION FROM T.O. EXIST. FINISH FLOOR TO U/S OF EXISTING FINISHED CEILING. PROVIDE APPROVED FASTENERS AT 2'–0" O.C. MIN SPACING AT FLOORS AND CEILINGS. MOVE PARTITION FROM EAST SIDE TO WEST SIDE WHEN WORK IS THRU ON THAT SIDE OR VICE VERSA AT THE DIRECTION OF THE EIC.

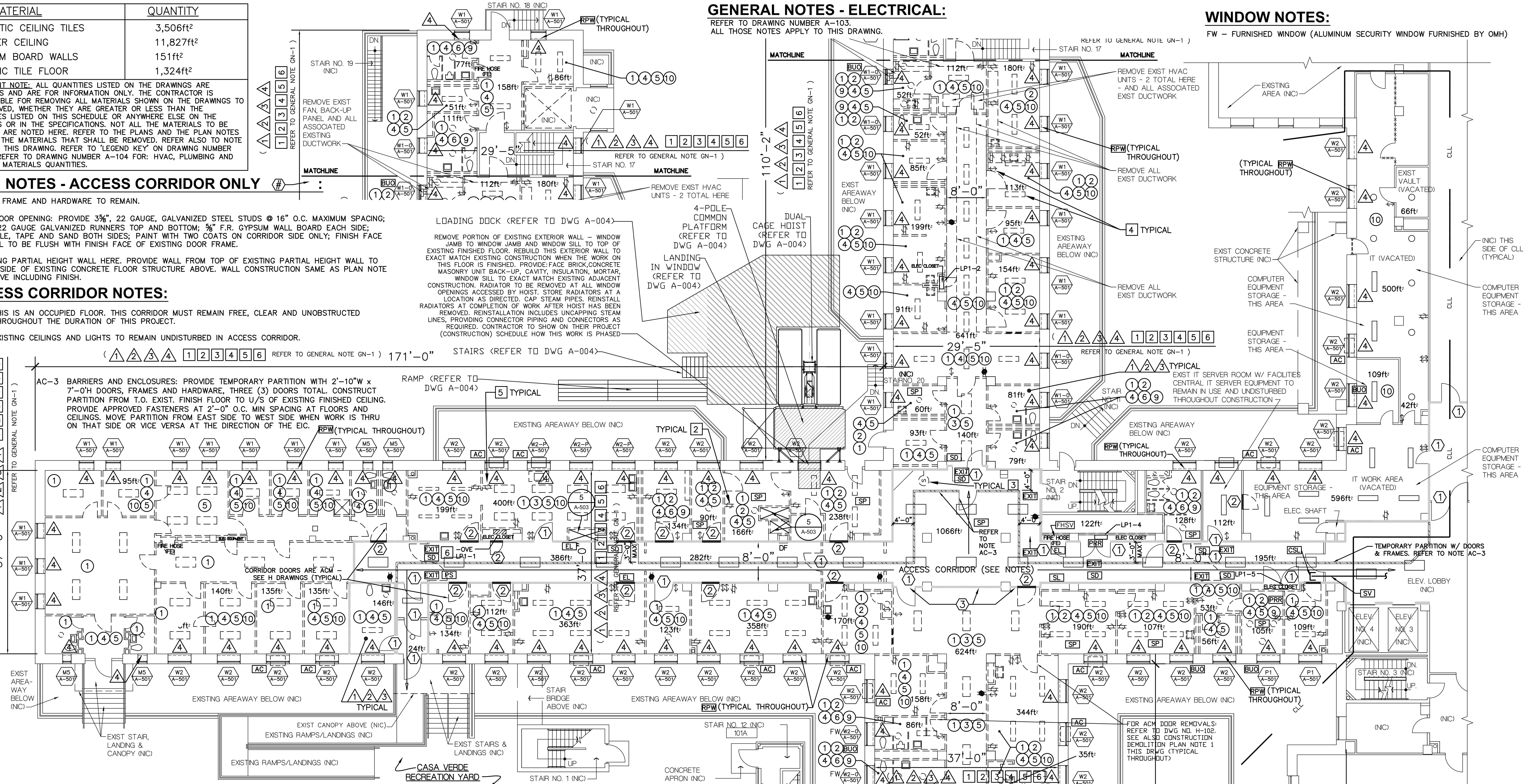

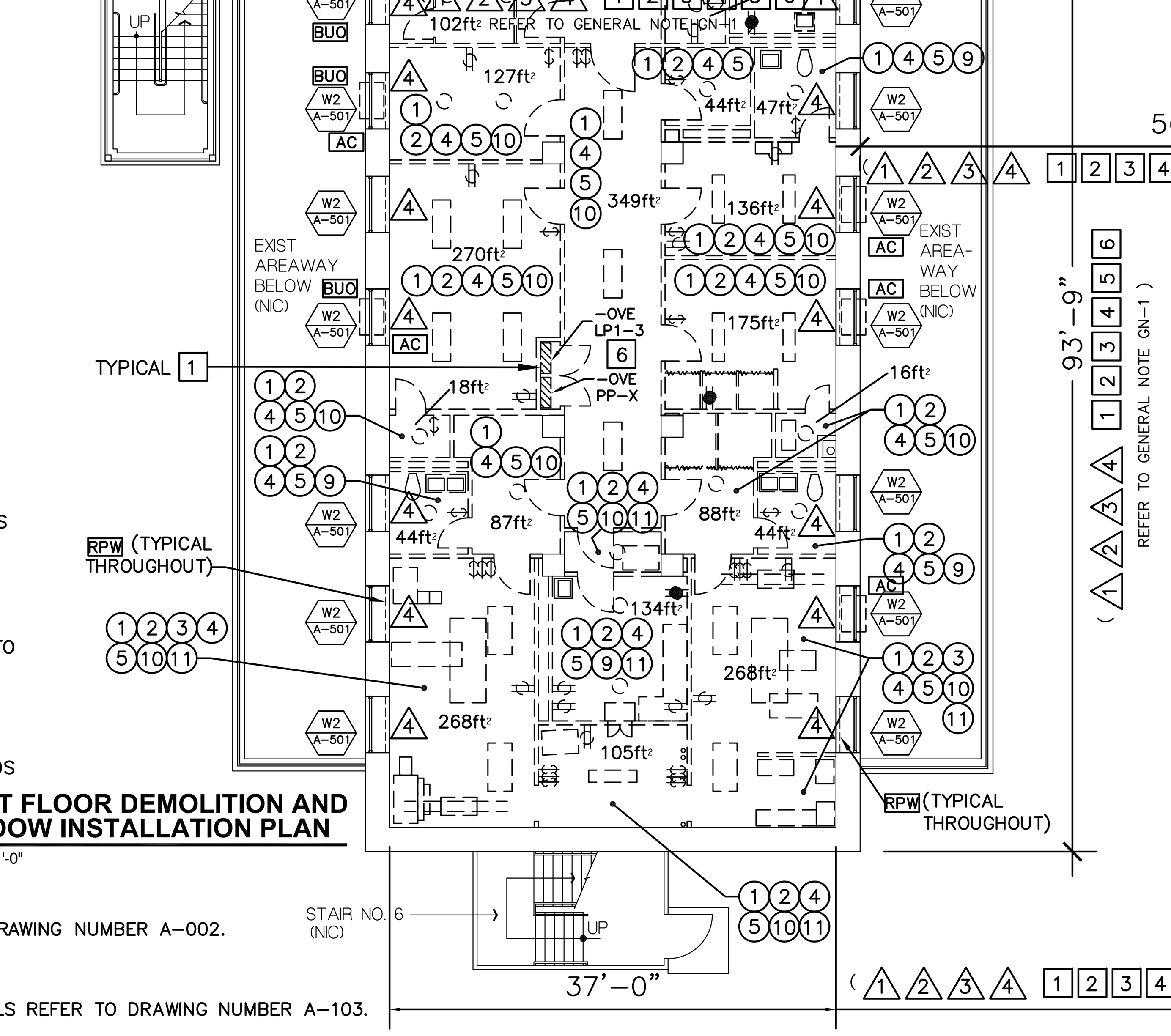

CONSTRUCTION DEMOLITION PLAN NOTES:

(1) REMOVE EXISTING STEEL DOORS, STEEL FRAMES AND RELATED HARDWARE. (COORDINATE DOOR REMOVAL WITH ASBESTOS ABATEMENT WORK)

(2) REMOVE EXISTING FIXED FURNITURE AND FIXED ACCESSORIES (CLOSETS, SHELVING, CASEWORK, COUNTERTOPS, WALL MOUNTED CABINETS, MIRRORS, DISPENSERS, BULLETIN BOARDS, MARBLE TOILET PARTITIONS, MARBLE SCREEN–WALLS/PARTITIONS, ETC.). TYPICAL THROUGHOUT ALL SPACES AT DEMOLITION WORK, WHETHER CALLED FOR OR NOT.

(3) REMOVE EXISTING ACOUSTIC CEILING TILES, GRID SYSTEM AND SUPPORTS.

(4) REMOVE EXISTING PLASTER CEILING, LATHE, BLACK IRON AND SUPPORTS.

(5) REMOVE EXISTING CMU PARTITION WITH PLASTER WALL FINISH, STEEL DOOR(S), STEEL FRAME(S) AND HARDWARE, ETC. PATCH FLOOR SLAB TO REMAIN. REMOVE ALL ACCESSORIES ATTACHED TO EXISTING WALLS, SUCH AS BUT NOT LIMITED TO: WALL PROTECTION/CHAIR RAILS, GRAB BARS, ANY AND ALL ACCESSORIES, ETC.

(6) REMOVE EXISTING CMU PARTITION WITH CERAMIC TILE WALL FINISH AND/OR PLASTER WALL FINISH, STEEL DOOR(S) & FRAME(S) AND HARDWARE, ETC. PATCH FLOOR SLAB TO REMAIN. REMOVE ALL ACCESSORIES ATTACHED TO EXISTING WALLS, SUCH AS BUT NOT LIMITED TO: WALL PROTECTION/CHAIR RAILS, GRAB BARS, AND ALL ACCESSORIES, ETC.

(7) REMOVE EXISTING GYPSUM WALL BOARD PARTITIONS, FRAMING AND DOOR FRAMES.

(8) NOT USED.

(9) REMOVE EXISTING CERAMIC TILE FLOOR FINISH.

(10) REMOVAL OF EXISTING VINYL ASBESTOS TILE (VAT). REFER TO ASBESTOS REMOVAL DRAWINGS.

(11) REMOVALS BY OMH, ALL: EXISTING X–RAY AND ALL EXISTING DARK ROOM EQUIPMENT – SUCH AS, BUT NOT LIMITED TO THE FOLLOWING: FLOOR MOUNTED EQUIPMENT, CEILING MOUNTED EQUIPMENT, FREE STANDING EQUIPMENT, AND ALL RELATED EXISTING X–RAY AND/OR DARK ROOM EQUIPMENT PARAPHERNALIA, ETC. CONTRACTOR TO REMOVE ALL: PARTITION WALLS, ALL ELECTRICAL RACEWAYS AND/OR ELECTRICAL CONDUITS, ELECTRIC SUB–PANELS, ETC, ASSOCIATED WITH THE EXISTING X–RAY EQUIPMENT, REMOVE ALL RELATED CONCRETE PADS.

ABANDONED MECHANICAL DEMOLITION PLAN NOTES:

△1 REMOVE ALL EXISTING PLUMBING FIXTURES AND PARTITIONS.

(CONTINUED)

ABANDONED MECHANICAL DEMOLITION PLAN NOTES (CONTINUED):

△2 REMOVE EXHAUST FAN AND ASSOCIATED DUCTWORK AND ACCESSORIES AND CAP AT MAIN.

△3 REMOVE VENT, WASTE AND ALL HOT AND COLD DOMESTIC WATER LINES BACK TO RISER IN CHASE/WALL AND CAP.

△4 EXISTING UNIT HEATERS AND RADIATORS TO REMAIN FOR TEMPORARY HEAT.

ABANDONED ELECTRICAL DEMOLITION PLAN NOTES:

[1] REMOVE ALL ABANDONED RACEWAYS, BOXES, SUPPORTS, ETC. WHERE EXPOSED (INCLUDING THOSE LOCATED ABOVE EXISTING SUSPENDED CEILINGS), AND WHERE THEY WILL INTERFERE WITH WORK OF FUTURE REHAB PROJECT. COORDINATE WITH THE DIRECTOR'S REPRESENTATIVE.

[2] DISCONNECT AND REMOVE ALL EXISTING CONDUITS, CONDUCTORS, RECEPTACLES, ETC. AS REQUIRED BACK TO EXISTING SOURCE.

[3] DISCONNECT AND REMOVE EXISTING SOUND SYSTEM DEVICE(S). CIRCUITING AND ALL SYSTEM COMPONENTS BACK TO EXISTING SOUND CONSOLE.

[4] DISCONNECT AND REMOVE EXISTING LIGHT FIXTURE(S), SWITCHES AND CIRCUITRY BACK TO POWER PANEL.

[5] DISCONNECT AND REMOVE TELEPHONE AND ALL WIRING CONDUIT ASSOCIATED BACK TO SOURCE.

[6] DISCONNECT PANEL TO BE REMOVED. PANELBOARDS AND RISERS SERVING PANELBOARDS ARE TO REMAIN.

MISCELLANEOUS SYMBOLS/NOTES:

[AC] AIR CONDITIONING UNIT AT WINDOW, EXISTING – REMOVE AND TURN OVER TO OMH.

[SP] SPRINKLERS, EXISTING AT ROOMS DENOTED THUS – REMOVE, REFER TO NOTE G8 ON DRAWING NUMBER A–002.

[BUO] BOARDED UP OPENING AT EXISTING WINDOW EXTERIOR – REMOVE.

[SD], [SL], [PS], [PRR], [EXIT], [EXIT], [FHSV], [CSL], [SV], [RPW], [EL]: FOR DESCRIPTIONS OF THESE SYMBOLS REFER TO DRAWING NUMBER A–103.

FIRST FLOOR DEMOLITION AND WINDOW INSTALLATION PLAN
3/32" = 1'-0"

GENERAL NOTES:

GN–1 FIRST FLOOR THROUGH TENTH FLOORS ARE GUT DEMOLITION – FOR THE FULL WORK AREA INDICATED AND FOR THE FULL HEIGHT, FLOOR TO FLOOR PER EACH FLOOR – UNLESS OTHERWISE SHOWN OR INDICATED. CONSTRUCTION DEMOLITION PLAN NOTE INDICATORS ((#)) ARE SHOWN ON FLOOR PLANS AS THEY ARE MORE SPECIFIC PER ROOM/AREA. YET, WHERE APPLICABLE, ALL THESE CONSTRUCTION DEMOLITION REMOVALS APPLY TO ALL THE INDICATED WORK AREAS THROUGHOUT THE FIRST THROUGH TENTH FLOORS. ALL THE REMOVALS IN THESE AREAS ARE CLEARLY CALLED OUT TO BE GUT DEMOLITION, THEREFORE THE CONTRACTOR SHALL PROVIDE ALL THESE REMOVALS AT NO ADDITIONAL COST TO THE STATE. ALL ABANDONED MECHANICAL DEMOLITION PLAN NOTES AND ALL ELECTRICAL DEMOLITION PLAN NOTES APPLY THROUGHOUT THE AREAS OF WORK THROUGHOUT THE FIRST FLOOR THROUGH TENTH FLOORS. ALL THESE ABANDONED MECHANICAL DEMOLITION ITEMS AND ALL THESE ABANDONED ELECTRICAL DEMOLITION ITEMS SHALL BE REMOVED IN THEIR ENTIRETIES AT THE FIRST FLOOR THROUGH TENTH FLOORS – FOR THE FULL WORK AREA INDICATED AND FOR THE FULL HEIGHT, FLOOR TO FLOOR PER EACH FLOOR – UNLESS OTHERWISE SHOWN OR INDICATED – AT NO ADDITIONAL COST TO THE STATE. THIS WORK INCLUDES ALL EXISTING FLOORS, WALLS, CEILINGS, DOORS, ETC, ASSOCIATED WITH THE EXISTING PLUMBING, ELECTRICAL AND MECHANICAL CHASES AND/OR EXISTING PLUMBING, ELECTRICAL AND MECHANICAL ROOMS.

GN–2 AND GN–3: REFER TO DRAWING NUMBER A–103

(△1 △2 △3 △4 [1][2][3][4][5][6] REFER TO GENERAL NOTE GN–1)

REFERENCE DRAWING

OGS
NYS OFFICE OF GENERAL SERVICES
Serving New York
ANDREW M. CUOMO
Governor
ROANN M. DESTITO
Commissioner
JAMES M. DAVIES, A.I.A.
Deputy Commissioner, Design and Construction

CONSULTANT

KEY PLAN
A–SIDE B–SIDE (NIC)
TRUE NORTH
PROJECT NORTH

WARNING:
THE ALTERATION OF THIS MATERIAL IN ANY WAY, UNLESS DONE UNDER THE DIRECTION OF A COMPARABLE PROFESSIONAL, I.E. ARCHITECT FOR AN ARCHITECT, ENGINEER FOR AN ENGINEER OR LANDSCAPE ARCHITECT FOR A LANDSCAPE ARCHITECT, IS A VIOLATION OF THE NEW YORK STATE EDUCATION LAW AND/OR REGULATIONS AND IS A CLASS 'A' MISDEMEANOR.

REGISTERED ARCHITECT DAVID W. MILLER 026832 STATE OF NEW YORK

CONTRACT: CONSTRUCTION

TITLE: ASBESTOS REMOVAL, DEMOLITION, AND REPLACE WINDOWS DUNLAP BUILDING NO. 102, A–SIDE

LOCATION: MANHATTAN PSYCHIATRIC CENTER 600 E. 125th STREET WARDS ISLAND, NY 10035

CLIENT: OFFICE OF MENTAL HEALTH

"REVISED DRAWING 12/26/2012"

MARK	DATE	DESCRIPTION
FINAL	10/3/2012	BID DOCUMENT

PROJECT NUMBER:	Q0763 – C
DESIGNED BY:	DWM
DRAWN BY:	SL, DWM
FIELD CHECK:	OGS
APPROVED:	DWM

SHEET TITLE: FIRST FLOOR DEMOLITION AND WINDOW INSTALLATION PLAN

DRAWING NUMBER: A–102

SHEET 28 OF 56

Jan 02,2013 – 8:58am
V:\DesignAndConstr\pQ07xx\q0763\CadArch\A–102_Q0763_Rev–Add4.dwg
36x24 PLOT SHEET

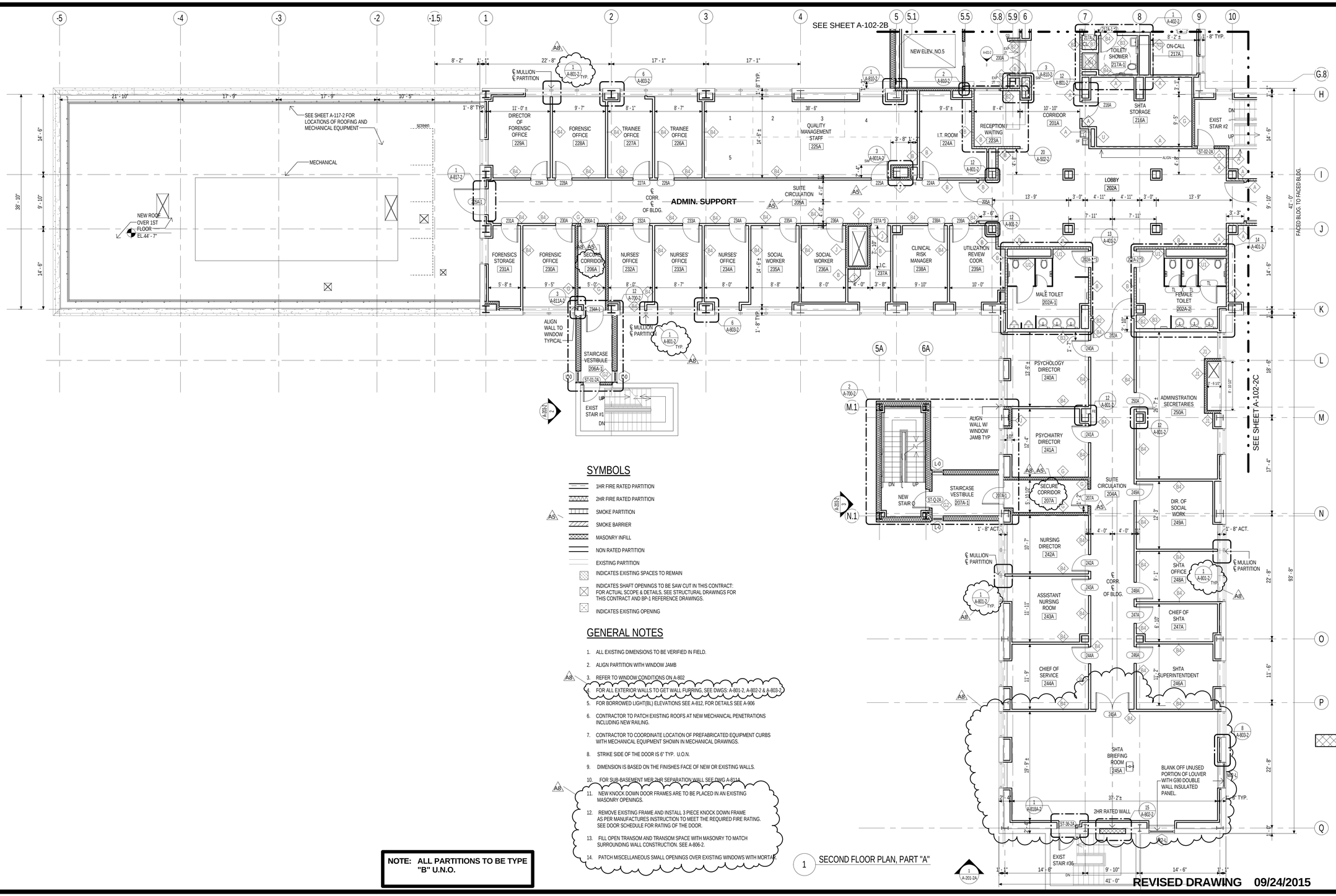

SYMBOLS

- 1HR FIRE RATED PARTITION
- 2HR FIRE RATED PARTITION
- SMOKE PARTITION
- SMOKE BARRIER
- MASONRY INFILL
- NON RATED PARTITION
- EXISTING PARTITION
- INDICATES EXISTING SPACES TO REMAIN
- INDICATES SHAFT OPENINGS TO BE SAW CUT IN THIS CONTRACT. FOR ACTUAL SCOPE & DETAILS, SEE STRUCTURAL DRAWINGS FOR THIS CONTRACT AND BP-1 REFERENCE DRAWINGS.
- INDICATES EXISTING OPENING

GENERAL NOTES

1. ALL EXISTING DIMENSIONS TO BE VERIFIED IN FIELD.
2. ALIGN PARTITION WITH WINDOW JAMB
3. REFER TO WINDOW CONDITIONS ON A-802
4. FOR ALL EXTERIOR WALLS TO GET WALL FURRING, SEE DWGS. A-801-2, A-802-2 & A-803-2.
5. FOR BORROWED LIGHT(BL) ELEVATIONS SEE A-812, FOR DETAILS SEE A-906
6. CONTRACTOR TO PATCH EXISTING ROOFS AT NEW MECHANICAL PENETRATIONS INCLUDING NEW RAILING.
7. CONTRACTOR TO COORDINATE LOCATION OF PREFABRICATED EQUIPMENT CURBS WITH MECHANICAL EQUIPMENT SHOWN IN MECHANICAL DRAWINGS.
8. STRIKE SIDE OF THE DOOR IS 6" TYP. U.O.N.
9. DIMENSION IS BASED ON THE FINISHES FACE OF NEW OR EXISTING WALLS.
10. FOR SUB-BASEMENT MER 2HR SEPARATION WALL SEE DWG A-811A
11. NEW KNOCK DOWN DOOR FRAMES ARE TO BE PLACED IN AN EXISTING MASONRY OPENINGS.
12. REMOVE EXISTING FRAME AND INSTALL 3 PIECE KNOCK DOWN FRAME AS PER MANUFACTURES INSTRUCTION TO MEET THE REQUIRED FIRE RATING. SEE DOOR SCHEDULE FOR RATING OF THE DOOR.
13. FILL OPEN TRANSOM AND TRANSOM SPACE WITH MASONRY TO MATCH SURROUNDING WALL CONSTRUCTION. SEE A-806-2.
14. PATCH MISCELLANEOUS SMALL OPENINGS OVER EXISTING WINDOWS WITH MORTAR.

NOTE: ALL PARTITIONS TO BE TYPE "B" U.N.O.

1 SECOND FLOOR PLAN, PART "A"

REVISED DRAWING 09/24/2015

NEW YORK STATE OF OPPORTUNITY. | Office of General Services

DESIGN & CONSTRUCTION

CONSULTANTS:

RBSD ARCHITECTS P.C. | STV 100 Years

A Joint Venture
225 Park Avenue South
New York, New York 10003

WARNING:
THE ALTERATION OF THIS MATERIAL IN ANY WAY, UNLESS DONE UNDER THE DIRECTION OF A COMPARABLE PROFESSIONAL, I.E. ARCHITECT FOR AN ARCHITECT, ENGINEER FOR AN ENGINEER OR LANDSCAPE ARCHITECT FOR A LANDSCAPE ARCHITECT, IS A VIOLATION OF THE NEW YORK STATE EDUCATION LAW AND/OR REGULATIONS AND IS A CLASS 'A' MISDEMEANOR.

REGISTERED ARCHITECT WILLIAM G. BELLIN NO. 10036 STATE OF NEW YORK

CONTRACT: CONSTRUCTION

TITLE: MAJOR BUILDING RENOVATIONS FOR THE MANHATTAN FORENSIC RELOCATION

LOCATION: MANHATTAN PSYCHIATRIC CENTER, BUILDING No. 102
600 EAST 125TH STREET WARDS ISLAND, NY10035

CLIENT: NYS OFFICE OF MENTAL HEALTH

MARK	DATE	DESCRIPTION
A8	09-24-2015	ADDENDUM # 8
A6	09-03-2015	ADDENDUM # 6
A5	08-12-2015	ADDENDUM # 5
	6-15-2015	BID DOCUMENT

PROJECT NUMBER:	44578
DESIGNED BY:	MAK / WW
DRAWN BY:	LR / LM / WW / JS / JM / DF / YB / YK
FIELD CHECK:	N/A
APPROVED:	WS / MAK / LF

SHEET TITLE: SECOND FLOOR PLAN, PART "A"

BUILDING NUMBER: 102

DRAWING NUMBER: A-102-2A

SHEET

9/23/2015 7:18:29 PM

MISCELLANEOUS SYMBOLS/NOTES:

- AC — AIR CONDITIONING UNIT AT WINDOW, EXISTING – REMOVE AND TURN OVER TO OMH.
- SP — SPRINKLERS, EXISTING AT ROOMS DENOTED THUS – REMOVE, REFER TO NOTE G8 ON DRAWING NUMBER A–002.
- BUO — BOARDED UP OPENING AT EXISTING WINDOW EXTERIOR – REMOVE.
- FAN — FAN, EXISTING, MOUNTED IN WINDOW – REMOVE.
- SS — SECURITY SCREEN, EXISTING STEEL SS AT INTERIOR OF EXISTING WINDOW OPENING – REMOVE.
- 2x4 — INSECT SCREEN WITH 2x4 WOOD FRAME, EXISTING – REMOVE.
- PBO — PLYWOOD BOX OUT – REMOVE.
- SD — SMOKE DETECTOR– RELOCATE, UNLESS OTHERWISE DIRECTED. REFER TO DETAIL 6/A–503 AND NOTE G8 ON DRAWING A–002
- SL — SPEAKER/STROBE LIGHT– RELOCATE, UNLESS OTHERWISE DIRECTED. REFER TO DETAIL 6/A–503 AND NOTE G8 ON DRAWING A–002
- PS — PULL STATION– RELOCATE, UNLESS OTHERWISE DIRECTED. REFER TO DETAIL 6/A–503 AND NOTE G8 ON DRAWING A–002
- PRR — PANELS AND RISERS TO REMAIN
- FHSV — EXISTING FIRE HOSE STANDPIPE & VALVE TO REMAIN FOR TEMPORARY STANDPIPE
- CSL — CAP EXISTING SPRINKLER LINE
- NSV — NO SPRINKLER VALVE THIS LOCATION
- RPW — AT ALL EXISTING WINDOW OPENINGS TO RECEIVE WINDOW REPLACEMENT– BASEMENT FLOOR AND FIRST (1ST) FLOOR THROUGH SIXTEENTH (16TH) FLOORS, INCLUSIVE: REMOVE EXISTING INTERIOR WYTHE OF EXISTING EXTERIOR WALL ASSEMBLY WHICH CONSISTS OF 3"± THICK CMU WITH PLASTER FINISH (4"± TOTAL THICKNESS). REMOVE ALL THIS EXISTING INTERIOR WYTHE ASSEMBLY (INCLUDING ALL EXISTING BASE MATERIAL WHERE APPLICABLE) FROM EXISTING WINDOW JAMB TO EXISTING WINDOW JAMB, FROM TOP OF EXISTING FINISH FLOOR TO TOP OF EXISTING WINDOW STOOL, REMOVE ALL OF THE EXISTING STEEL SECURITY RADIATOR COVER ASSEMBLIES IN THEIR ENTIRETIES. REMOVE ALL EXISTING WINDOW STOOLS. AT ALL EXISTING WINDOW JAMB RETURNS: REMOVE THOSE PORTIONS OF THE EXISTING INTERIOR WYTHE OF EXISTING EXTERIOR WALL ASSEMBLY CONSISTING OF CMU'S AND PLASTER (SEE ABOVE) THAT NEED TO BE REMOVED TO INSTALL THE WINDOW CLIPS. SEE ALSO DRAWING NUMBERS: A–501, A–502, A–510, A–511, A–512, A–513, A–514 AND A–515 FOR DETAILED INFORMATION.

GENERAL NOTES:

GN–1 FIRST FLOOR THROUGH TENTH FLOORS ARE GUT DEMOLITION – FOR THE FULL WORK AREA INDICATED AND FOR THE FULL HEIGHT, FLOOR TO FLOOR PER EACH FLOOR – UNLESS OTHERWISE SHOWN OR INDICATED. CONSTRUCTION DEMOLITION PLAN NOTE INDICATORS ((#)) ARE SHOWN ON FLOOR PLANS AS THEY ARE MORE SPECIFIC PER ROOM/AREA. YET, WHERE APPLICABLE, ALL THESE CONSTRUCTION DEMOLITION REMOVALS APPLY TO ALL THE INDICATED WORK AREAS THROUGHOUT THE FIRST THROUGH TENTH FLOORS. ALL THE REMOVALS IN THESE AREAS ARE CLEARLY CALLED OUT TO BE GUT DEMOLITION, THEREFORE THE CONTRACTOR SHALL PROVIDE ALL THESE REMOVALS AT NO ADDITIONAL COST TO THE STATE. ALL ABANDONED MECHANICAL DEMOLITION PLAN NOTES AND ALL ELECTRICAL DEMOLITION PLAN NOTES APPLY THROUGHOUT THE AREAS OF WORK THROUGHOUT THE FIRST FLOOR THROUGH TENTH FLOORS. ALL THESE ABANDONED MECHANICAL DEMOLITION ITEMS AND ALL THESE ABANDONED ELECTRICAL DEMOLITION ITEMS SHALL BE REMOVED IN THEIR ENTIRETIES AT THE FIRST FLOOR THROUGH TENTH FLOORS – FOR THE FULL WORK AREA INDICATED AND FOR THE FULL HEIGHT, FLOOR TO FLOOR PER EACH FLOOR – UNLESS OTHERWISE SHOWN OR INDICATED – AT NO ADDITIONAL COST TO THE STATE. THIS WORK INCLUDES ALL EXISTING FLOORS, WALLS, CEILINGS, DOORS, ETC, ASSOCIATED WITH THE EXISTING PLUMBING, ELECTRICAL AND MECHANICAL CHASES AND/OR EXISTING PLUMBING, ELECTRICAL AND MECHANICAL ROOMS.

GN–2 REFER TO GENERAL NOTE A ON DRAWING Nos. H–101 THRU H–117 FOR PIPING INSULATION REQUIREMENTS AT ALL UN–INSULATED EXISTING DOMESTIC HOT AND COLD PIPE AND FITTINGS.

GN–3 REFER TO GENERAL NOTE B ON DRAWING Nos. H–101 THRU H–117 FOR PIPING INSULATION REQUIREMENTS AT ALL UN–INSULATED EXISTING HEATING (STEAM AND CONDENSATE) PIPING.

CONSTRUCTION DEMOLITION PLAN NOTES:

1. REMOVE EXISTING STEEL DOORS, STEEL FRAMES AND RELATED HARDWARE. (COORDINATE DOOR REMOVAL WITH ASBESTOS ABATEMENT WORK)
2. REMOVE EXISTING FIXED FURNITURE AND FIXED ACCESSORIES (CLOSETS, SHELVING, CASEWORK, COUNTERTOPS, WALL MOUNTED CABINETS, MIRRORS, DISPENSERS, BULLETIN BOARDS, MARBLE TOILET PARTITIONS, MARBLE SCREEN–WALLS/PARTITIONS, ETC.). TYPICAL THROUGHOUT ALL SPACES AT DEMOLITION WORK, WHETHER CALLED FOR OR NOT.
3. REMOVE EXISTING ACOUSTIC CEILING TILES, GRID SYSTEM AND SUPPORTS.
4. REMOVE EXISTING PLASTER CEILING, LATHE, BLACK IRON AND SUPPORTS.
5. REMOVE EXISTING CMU PARTITION WITH PLASTER WALL FINISH, STEEL DOOR(S), STEEL FRAME(S) AND HARDWARE, ETC. PATCH FLOOR SLAB TO REMAIN. REMOVE ALL ACCESSORIES ATTACHED TO EXISTING WALLS, SUCH AS BUT NOT LIMITED TO: WALL PROTECTION/CHAIR RAILS, GRAB BARS, ANY AND ALL ACCESSORIES, ETC.
6. REMOVE EXISTING CMU PARTITION WITH CERAMIC TILE WALL FINISH AND/OR PLASTER WALL FINISH, STEEL DOOR(S) & FRAME(S) AND HARDWARE, ETC. PATCH FLOOR SLAB TO REMAIN. REMOVE ALL ACCESSORIES ATTACHED TO EXISTING WALLS, SUCH AS BUT NOT LIMITED TO: WALL PROTECTION/CHAIR RAILS, GRAB BARS, AND ALL ACCESSORIES, ETC.
7. REMOVE EXISTING GYPSUM WALL BOARD PARTITIONS, FRAMING AND DOOR FRAMES.
8. NOT USED.
9. REMOVE EXISTING CERAMIC TILE FLOOR FINISH.
10. REMOVAL OF EXISTING VINYL ASBESTOS TILE (VAT). REFER TO ASBESTOS REMOVAL DRAWINGS.

ABANDONED MECHANICAL DEMOLITION PLAN NOTES:

1. REMOVE ALL EXISTING PLUMBING FIXTURES AND PARTITIONS.
2. REMOVE EXHAUST FAN AND ASSOCIATED DUCTWORK AND ACCESSORIES AND CAP AT MAIN.
3. REMOVE VENT, WASTE AND ALL HOT AND COLD DOMESTIC WATER LINES BACK TO RISER IN CHASE/WALL AND CAP.
4. EXISTING UNIT HEATERS AND RADIATORS TO REMAIN FOR TEMPORARY HEAT.

ABANDONED ELECTRICAL DEMOLITION PLAN NOTES:

1. REMOVE ALL ABANDONED RACEWAYS, BOXES, SUPPORTS, ETC. WHERE EXPOSED (INCLUDING THOSE LOCATED ABOVE EXISTING SUSPENDED CEILINGS), AND WHERE THEY WILL INTERFERE WITH WORK OF FUTURE REHAB PROJECT. COORDINATE WITH THE DIRECTOR'S REPRESENTATIVE.
2. DISCONNECT AND REMOVE ALL EXISTING CONDUITS, CONDUCTORS, RECEPTACLES, ETC. AS REQUIRED BACK TO EXISTING SOURCE.
3. DISCONNECT AND REMOVE EXISTING SOUND SYSTEM DEVICE(S). CIRCUITING AND ALL SYSTEM COMPONENTS BACK TO EXISTING SOUND CONSOLE.
4. DISCONNECT AND REMOVE EXISTING LIGHT FIXTURE(S), SWITCHES AND CIRCUITRY BACK TO POWER PANEL.
5. DISCONNECT AND REMOVE TELEPHONE AND ALL WIRING CONDUIT ASSOCIATED BACK TO SOURCE.
6. DISCONNECT PANEL TO BE REMOVED. PANELBOARDS AND RISERS SERVING PANELBOARDS ARE TO REMAIN.

GENERAL NOTES - ELECTRICAL:

A. CONTRACTOR SHALL IDENTIFY AND MAINTAIN THE CIRCUITS TO REMAIN ACTIVE:
   1. STAIRWAY LIGHTING
   2. LIGHTING AND POWER IN ELEVATOR CORE AREA
   3. LIGHTING AND POWER OUTSIDE WORK AREA

B. SOURCE FOR TEMPORARY LIGHT AND POWER IS FROM THE EXISTING "PANELS AND RISERS TO REMAIN PRR"

WINDOW NOTES:

FW – FURNISHED WINDOW (ALUMINUM SECURITY WINDOW FURNISHED BY OMH)

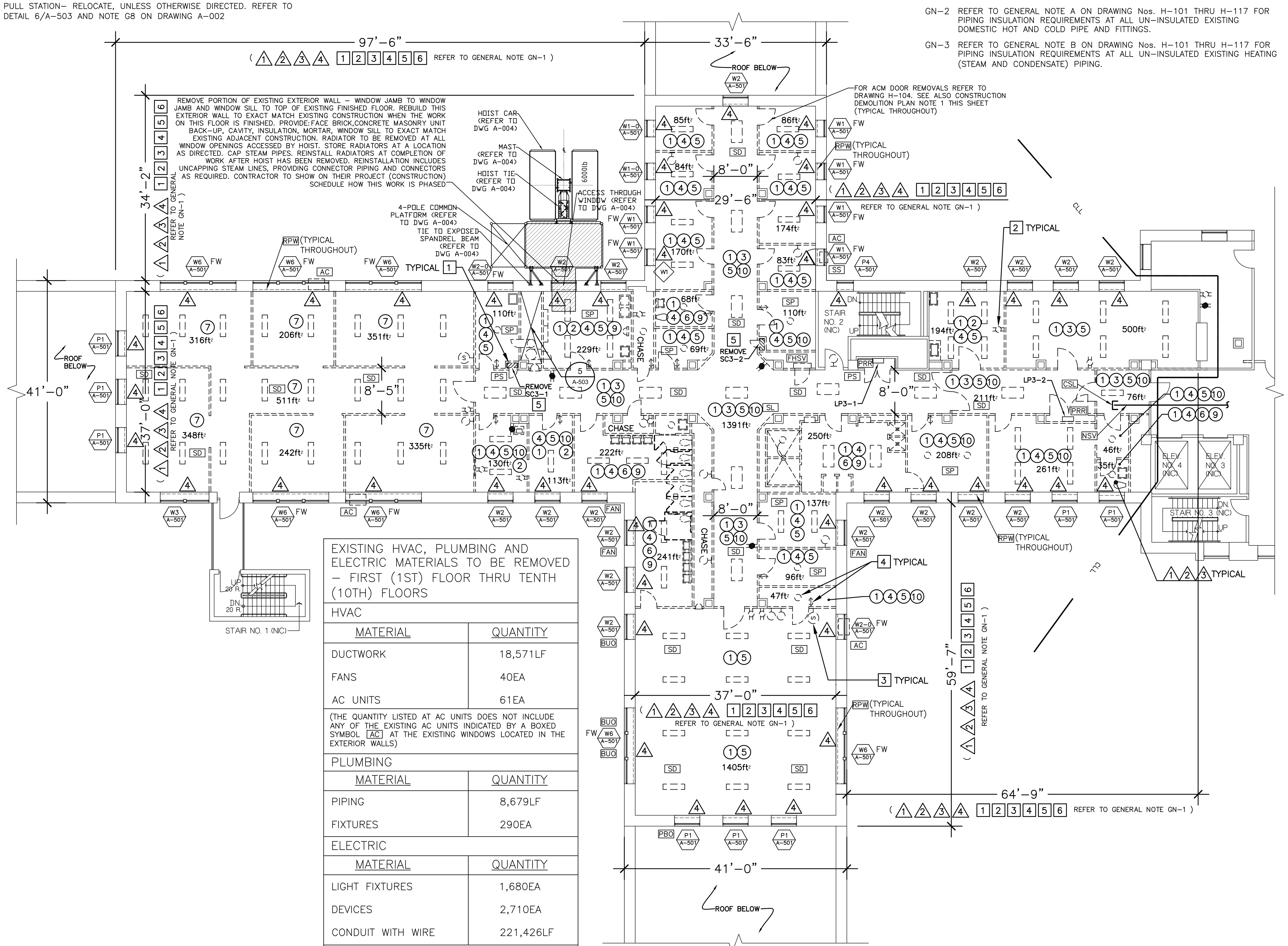

THIRD FLOOR DEMOLITION AND WINDOW INSTALLATION PLAN

3/32" = 1'-0"

EXISTING HVAC, PLUMBING AND ELECTRIC MATERIALS TO BE REMOVED – FIRST (1ST) FLOOR THRU TENTH (10TH) FLOORS	
HVAC	
MATERIAL	QUANTITY
DUCTWORK	18,571LF
FANS	40EA
AC UNITS	61EA
(THE QUANTITY LISTED AT AC UNITS DOES NOT INCLUDE ANY OF THE EXISTING AC UNITS INDICATED BY A BOXED SYMBOL AC AT THE EXISTING WINDOWS LOCATED IN THE EXTERIOR WALLS)	
PLUMBING	
MATERIAL	QUANTITY
PIPING	8,679LF
FIXTURES	290EA
ELECTRIC	
MATERIAL	QUANTITY
LIGHT FIXTURES	1,680EA
DEVICES	2,710EA
CONDUIT WITH WIRE	221,426LF

IMPORTANT NOTE: ALL QUANTITIES LISTED ON THE DRAWINGS ARE ESTIMATES AND ARE FOR INFORMATION ONLY. THE CONTRACTOR IS RESPONSIBLE FOR REMOVING ALL MATERIALS SHOWN ON THE DRAWINGS TO BE REMOVED, WHETHER THEY ARE GREATER OR LESS THAN THE QUANTITIES LISTED ON THIS SCHEDULE OR ANYWHERE ELSE ON THE DRAWINGS OR IN THE SPECIFICATIONS. NOT ALL THE MATERIALS TO BE REMOVED ARE NOTED HERE. REFER TO THE PLANS AND THE PLAN NOTES FOR ALL THE MATERIALS THAT SHALL BE REMOVED. REFER ALSO TO NOTE GN–1 ON THIS DRAWING. REFER TO 'LEGEND KEY' ON DRAWING NUMBER A–002. REFER TO DRAWING NUMBER A–104 FOR: HVAC, PLUMBING AND ELECTRIC MATERIALS QUANTITIES.

MATERIAL	QUANTITY
ACOUSTIC CEILING TILES	2,178SF
PLASTER CEILING	3,248SF
GYPSUM BOARD WALLS	960SF
CERAMIC TILE FLOOR	1045SF

IMPORTANT NOTE: ALL QUANTITIES LISTED ON THE DRAWINGS ARE ESTIMATES AND ARE FOR INFORMATION ONLY. THE CONTRACTOR IS RESPONSIBLE FOR REMOVING ALL MATERIALS SHOWN ON THE DRAWINGS TO BE REMOVED, WHETHER THEY ARE GREATER OR LESS THAN THE QUANTITIES LISTED ON THIS SCHEDULE OR ANYWHERE ELSE ON THE DRAWINGS OR IN THE SPECIFICATIONS. NOT ALL THE MATERIALS TO BE REMOVED ARE NOTED HERE. REFER TO THE PLANS AND THE PLAN NOTES FOR ALL THE MATERIALS THAT SHALL BE REMOVED. REFER ALSO TO NOTE GN–1 ON THIS DRAWING. REFER TO 'LEGEND KEY' ON DRAWING NUMBER A–002. REFER TO DRAWING NUMBER A–104 FOR: HVAC, PLUMBING AND ELECTRIC MATERIALS QUANTITIES.

REFERENCE DRAWING

NYS OFFICE OF GENERAL SERVICES
Serving New York
ANDREW M. CUOMO, Governor
ROANN M. DESTITO, Commissioner
JAMES M. DAVIES, A.I.A., Deputy Commissioner, Design and Construction
CONSULTANT

KEY PLAN

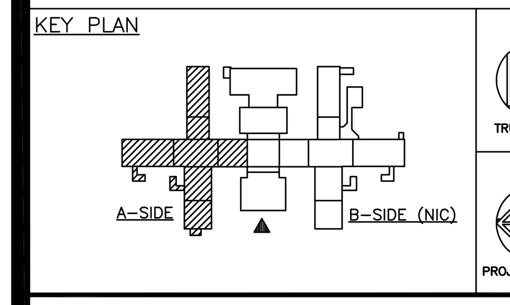

WARNING:
THE ALTERATION OF THIS MATERIAL IN ANY WAY, UNLESS DONE UNDER THE DIRECTION OF A COMPARABLE PROFESSIONAL, I.E. ARCHITECT FOR AN ARCHITECT, ENGINEER FOR AN ENGINEER OR LANDSCAPE ARCHITECT FOR A LANDSCAPE ARCHITECT, IS A VIOLATION OF THE NEW YORK STATE EDUCATION LAW AND/OR REGULATIONS AND IS A CLASS 'A' MISDEMEANOR.

REGISTERED ARCHITECT DAVID W. MILLER 026832 STATE OF NEW YORK

CONTRACT: CONSTRUCTION

TITLE: ASBESTOS REMOVAL, DEMOLITION, AND REPLACE WINDOWS DUNLAP BUILDING NO. 102, A–SIDE

LOCATION: MANHATTAN PSYCHIATRIC CENTER
600 E. 125th STREET
WARDS ISLAND, NY 10035

CLIENT: OFFICE OF MENTAL HEALTH

"REVISED DRAWING 12/26/2012"

MARK	DATE	DESCRIPTION
FINAL	10/3/2012	BID DOCUMENT

PROJECT NUMBER:	Q0763 – C
DESIGNED BY:	DWM
DRAWN BY:	SL, DWM
FIELD CHECK:	OGS
APPROVED:	DWM

SHEET TITLE: THIRD FLOOR DEMOLITION AND WINDOW INSTALLATION PLAN

DRAWING NUMBER: A–104

SHEET 30 OF 56

Jan 02,2013 – 2:36pm
V:\DesignAndConstr\pQ07xx\q0763\CadArch\A–104_Q0763_Rev–Add4.dwg
36x24 PLOT SHEET

MISCELLANEOUS SYMBOLS/NOTES:

- AC — AIR CONDITIONING UNIT AT WINDOW, EXISTING – REMOVE AND TURN OVER TO OMH.
- SP — SPRINKLERS, EXISTING AT ROOMS DENOTED THUS – REMOVE, REFER TO NOTE G8 ON DRAWING NUMBER A-002.
- BUO — BOARDED UP OPENING AT EXISTING WINDOW EXTERIOR – REMOVE.
- FAN — FAN, EXISTING, MOUNTED IN WINDOW – REMOVE.
- SS — SECURITY SCREEN, EXISTING STEEL SS AT INTERIOR OF EXISTING WINDOW OPENING – REMOVE.
- 2x4 — INSECT SCREEN WITH 2x4 WOOD FRAME, EXISTING – REMOVE.
- PBO — PLYWOOD BOX OUT – REMOVE.
- SD — SMOKE DETECTOR– RELOCATE, UNLESS OTHERWISE DIRECTED. REFER TO DETAIL 6/A-503 AND NOTE G8 ON DRAWING A-002
- SL — SPEAKER/STROBE LIGHT– RELOCATE, UNLESS OTHERWISE DIRECTED. REFER TO DETAIL 6/A-503 AND NOTE G8 ON DRAWING A-002
- PS — PULL STATION– RELOCATE, UNLESS OTHERWISE DIRECTED. REFER TO DETAIL 6/A-503 AND NOTE G8 ON DRAWING A-002
- PRR — PANELS AND RISERS TO REMAIN
- FHSV — EXISTING FIRE HOSE STANDPIPE & VALVE TO REMAIN FOR TEMPORARY STANDPIPE
- CSL — CAP EXISTING SPRINKLER LINE
- NSV — NO SPRINKLER VALVE THIS LOCATION
- RPW — AT ALL EXISTING WINDOW OPENINGS TO RECEIVE WINDOW REPLACEMENT– BASEMENT FLOOR AND FIRST (1ST) FLOOR THROUGH SIXTEENTH (16TH) FLOORS, INCLUSIVE: REMOVE EXISTING INTERIOR WYTHE OF EXISTING EXTERIOR WALL ASSEMBLY WHICH CONSISTS OF 3"± THICK CMU WITH PLASTER FINISH (4"± TOTAL THICKNESS). REMOVE ALL THIS EXISTING INTERIOR WYTHE ASSEMBLY (INCLUDING ALL EXISTING BASE MATERIAL WHERE APPLICABLE) FROM EXISTING WINDOW JAMB TO EXISTING WINDOW JAMB, FROM TOP OF EXISTING FINISH FLOOR TO TOP OF EXISTING WINDOW STOOL, REMOVE ALL OF THE EXISTING STEEL SECURITY RADIATOR COVER ASSEMBLIES IN THEIR ENTIRETIES. REMOVE ALL EXISTING WINDOW STOOLS. AT ALL EXISTING WINDOW JAMB RETURNS: REMOVE THOSE PORTIONS OF THE EXISTING INTERIOR WYTHE OF EXISTING EXTERIOR WALL ASSEMBLY CONSISTING OF CMU'S AND PLASTER (SEE ABOVE) THAT NEED TO BE REMOVED TO INSTALL THE WINDOW CLIPS. SEE ALSO DRAWING NUMBERS: A-501, A-502, A-510, A-511, A-512, A-513, A-514 AND A-515 FOR DETAILED INFORMATION.

GENERAL NOTES:

GN-1 FIRST FLOOR THROUGH TENTH FLOORS ARE GUT DEMOLITION – FOR THE FULL WORK AREA INDICATED AND FOR THE FULL HEIGHT, FLOOR TO FLOOR PER EACH FLOOR – UNLESS OTHERWISE SHOWN OR INDICATED. CONSTRUCTION DEMOLITION PLAN NOTE INDICATORS ((#)) ARE SHOWN ON FLOOR PLANS AS THEY ARE MORE SPECIFIC PER ROOM/AREA. YET, WHERE APPLICABLE, ALL THESE CONSTRUCTION DEMOLITION REMOVALS APPLY TO ALL THE INDICATED WORK AREAS THROUGHOUT THE FIRST THROUGH TENTH FLOORS. ALL THE REMOVALS IN THESE AREAS ARE CLEARLY CALLED OUT TO BE GUT DEMOLITION, THEREFORE THE CONTRACTOR SHALL PROVIDE ALL THESE REMOVALS AT NO ADDITIONAL COST TO THE STATE. ALL ABANDONED MECHANICAL DEMOLITION PLAN NOTES AND ALL ELECTRICAL DEMOLITION PLAN NOTES APPLY THROUGHOUT THE AREAS OF WORK THROUGHOUT THE FIRST FLOOR THROUGH TENTH FLOORS. ALL THESE ABANDONED MECHANICAL DEMOLITION ITEMS AND ALL THESE ABANDONED ELECTRICAL DEMOLITION ITEMS SHALL BE REMOVED IN THEIR ENTIRETIES AT THE FIRST FLOOR THROUGH TENTH FLOORS – FOR THE FULL WORK AREA INDICATED AND FOR THE FULL HEIGHT, FLOOR TO FLOOR PER EACH FLOOR – UNLESS OTHERWISE SHOWN OR INDICATED – AT NO ADDITIONAL COST TO THE STATE. THIS WORK INCLUDES ALL EXISTING FLOORS, WALLS, CEILINGS, DOORS, ETC, ASSOCIATED WITH THE EXISTING PLUMBING, ELECTRICAL AND MECHANICAL CHASES AND/OR EXISTING PLUMBING, ELECTRICAL AND MECHANICAL ROOMS.

GN-2 REFER TO GENERAL NOTE A ON DRAWING Nos. H-101 THRU H-117 FOR PIPING INSULATION REQUIREMENTS AT ALL UN-INSULATED EXISTING DOMESTIC HOT AND COLD PIPE AND FITTINGS.

GN-3 REFER TO GENERAL NOTE B ON DRAWING Nos. H-101 THRU H-117 FOR PIPING INSULATION REQUIREMENTS AT ALL UN-INSULATED EXISTING HEATING (STEAM AND CONDENSATE) PIPING.

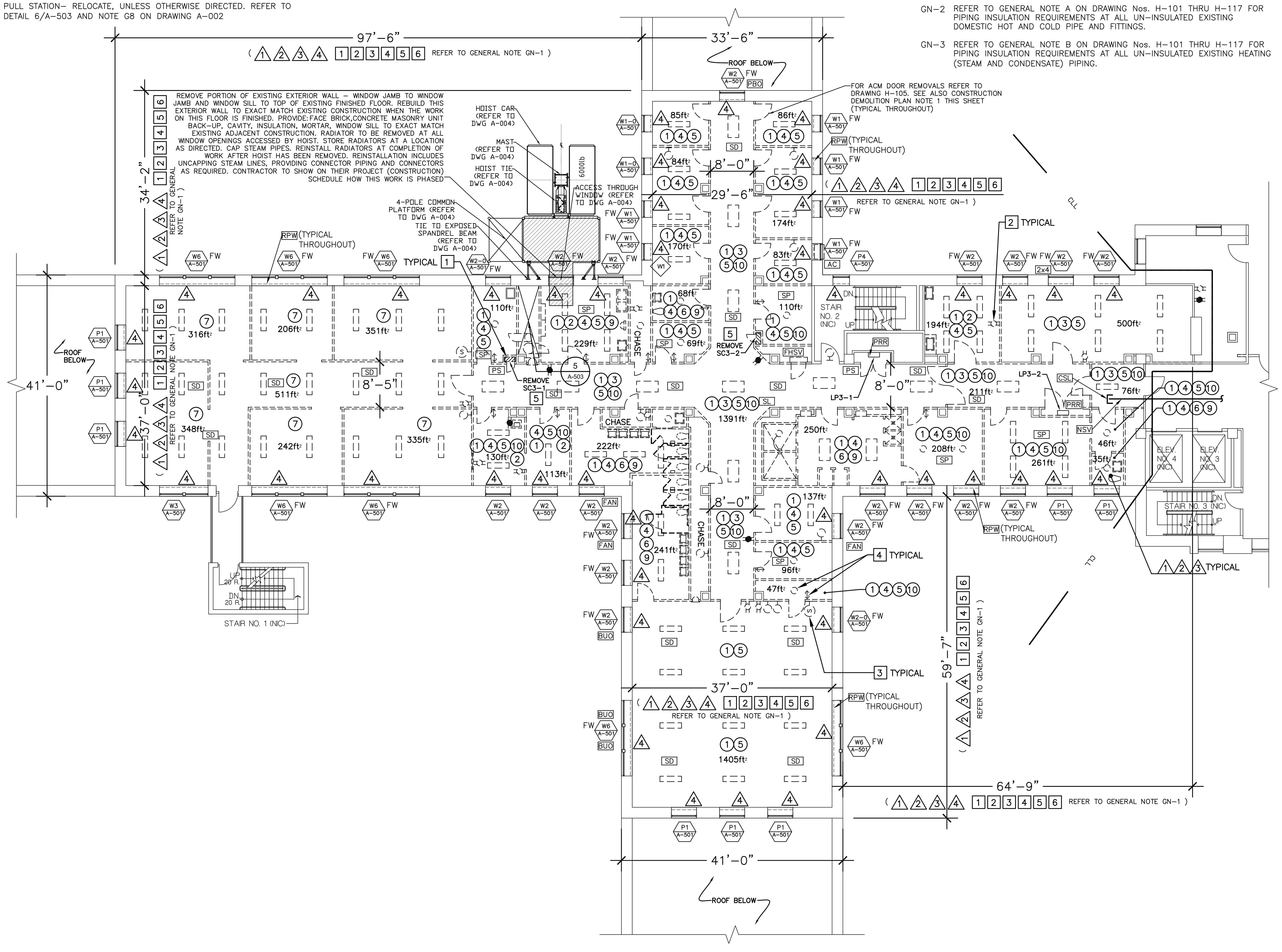

FOURTH FLOOR DEMOLITION AND WINDOW INSTALLATION PLAN

3/32" = 1'-0"

CONSTRUCTION DEMOLITION PLAN NOTES:

1. REMOVE EXISTING STEEL DOORS, STEEL FRAMES AND RELATED HARDWARE. (COORDINATE DOOR REMOVAL WITH ASBESTOS ABATEMENT WORK)
2. REMOVE EXISTING FIXED FURNITURE AND FIXED ACCESSORIES (CLOSETS, SHELVING, CASEWORK, COUNTERTOPS, WALL MOUNTED CABINETS, MIRRORS, DISPENSERS, BULLETIN BOARDS, MARBLE TOILET PARTITIONS, MARBLE SCREEN-WALLS/PARTITIONS, ETC.). TYPICAL THROUGHOUT ALL SPACES AT DEMOLITION WORK, WHETHER CALLED FOR OR NOT.
3. REMOVE EXISTING ACOUSTIC CEILING TILES, GRID SYSTEM AND SUPPORTS.
4. REMOVE EXISTING PLASTER CEILING, LATHE, BLACK IRON AND SUPPORTS.
5. REMOVE EXISTING CMU PARTITION WITH PLASTE
6. STEEL DOOR(S) & FRAME(S) AND HARDWARE, ETC. PATCH FLOOR SLAB TO REMAIN. REMOVE ALL ACCESSORIES ATTACHED TO EXISTING WALLS, SUCH AS BUT NOT LIMITED TO: WALL PROTECTION/CHAIR RAILS, GRAB BARS, AND ALL ACCESSORIES, ETC.
7. REMOVE EXISTING GYPSUM WALL BOARD PARTITIONS, FRAMING AND DOOR FRAMES.
8. NOT USED.
9. REMOVE EXISTING CERAMIC TILE FLOOR FINISH.
10. REMOVAL OF EXISTING VINYL ASBESTOS TILE (VAT). REFER TO ASBESTOS REMOVAL DRAWINGS.

ABANDONED MECHANICAL DEMOLITION PLAN NOTES:

1. REMOVE ALL EXISTING PLUMBING FIXTURES AND PARTITIONS.
2. REMOVE EXHAUST FAN AND ASSOCIATED DUCTWORK AND ACCESSORIES AND CAP AT MAIN.
3. REMOVE VENT, WASTE AND ALL HOT AND COLD DOMESTIC WATER LINES BACK TO RISER IN CHASE/WALL AND CAP.
4. EXISTING UNIT HEATERS AND RADIATORS TO REMAIN FOR TEMPORARY HEAT.

ABANDONED ELECTRICAL DEMOLITION PLAN NOTES:

1. REMOVE ALL ABANDONED RACEWAYS, BOXES, SUPPORTS, ETC. WHERE EXPOSED (INCLUDING THOSE LOCATED ABOVE EXISTING SUSPENDED CEILINGS), AND WHERE THEY WILL INTERFERE WITH WORK OF FUTURE REHAB PROJECT. COORDINATE WITH THE DIRECTOR'S REPRESENTATIVE.
2. DISCONNECT AND REMOVE ALL EXISTING CONDUITS, CONDUCTORS, RECEPTACLES, ETC. AS REQUIRED BACK TO EXISTING SOURCE.
3. DISCONNECT AND REMOVE EXISTING SOUND SYSTEM DEVICE(S). CIRCUITING AND ALL SYSTEM COMPONENTS BACK TO EXISTING SOUND CONSOLE.
4. DISCONNECT AND REMOVE EXISTING LIGHT FIXTURE(S), SWITCHES AND CIRCUITRY BACK TO POWER PANEL.
5. DISCONNECT AND REMOVE TELEPHONE AND ALL WIRING CONDUIT ASSOCIATED BACK TO SOURCE.
6. DISCONNECT PANEL TO BE REMOVED. PANELBOARDS AND RISERS SERVING PANELBOARDS ARE TO REMAIN.

GENERAL NOTES - ELECTRICAL:

A. CONTRACTOR SHALL IDENTIFY AND MAINTAIN THE CIRCUITS TO REMAIN ACTIVE:
1. STAIRWAY LIGHTING
2. LIGHTING AND POWER IN ELEVATOR CORE AREA
3. LIGHTING AND POWER OUTSIDE WORK AREA

B. SOURCE FOR TEMPORARY LIGHT AND POWER IS FROM THE EXISTING "PANELS AND RISERS TO REMAIN PRR"

WINDOW NOTES:

FW – FURNISHED WINDOW (ALUMINUM SECURITY WINDOW FURNISHED BY OMH)

MATERIAL	QUANTITY
ACOUSTIC CEILING TILES	875SF
PLASTER CEILING	1,350SF
GYPSUM BOARD WALLS	960SF
CERAMIC TILE FLOOR	440SF

IMPORTANT NOTE: ALL QUANTITIES LISTED ON THE DRAWINGS ARE ESTIMATES AND ARE FOR INFORMATION ONLY. THE CONTRACTOR IS RESPONSIBLE FOR REMOVING ALL MATERIALS SHOWN ON THE DRAWINGS TO BE REMOVED, WHETHER THEY ARE GREATER OR LESS THAN THE QUANTITIES LISTED ON THIS SCHEDULE OR ANYWHERE ELSE ON THE DRAWINGS OR IN THE SPECIFICATIONS. NOT ALL THE MATERIALS TO BE REMOVED ARE NOTED HERE. REFER TO THE PLANS AND THE PLAN NOTES FOR ALL THE MATERIALS THAT SHALL BE REMOVED. REFER ALSO TO NOTE GN-1 ON THIS DRAWING. REFER TO 'LEGEND KEY' ON DRAWING NUMBER A-002. REFER TO DRAWING NUMBER A-104 FOR: HVAC, PLUMBING AND ELECTRIC MATERIALS QUANTITIES.

REFERENCE DRAWING

NYS OFFICE OF GENERAL SERVICES

Serving New York

ANDREW M. CUOMO
Governor
ROANN M. DESTITO
Commissioner
JAMES M. DAVIES, A.I.A.
Deputy Commissioner, Design and Construction

CONSULTANT

KEY PLAN — A-SIDE — B-SIDE (NIC) — TRUE NORTH — PROJECT NORTH

WARNING:

THE ALTERATION OF THIS MATERIAL IN ANY WAY, UNLESS DONE UNDER THE DIRECTION OF A COMPARABLE PROFESSIONAL, I.E. ARCHITECT FOR AN ARCHITECT, ENGINEER FOR AN ENGINEER OR LANDSCAPE ARCHITECT FOR A LANDSCAPE ARCHITECT, IS A VIOLATION OF THE NEW YORK STATE EDUCATION LAW AND/OR REGULATIONS AND IS A CLASS 'A' MISDEMEANOR.

REGISTERED ARCHITECT DAVID W. MILLER 026832 STATE OF NEW YORK

CONTRACT: CONSTRUCTION

TITLE: ASBESTOS REMOVAL, DEMOLITION, AND REPLACE WINDOWS DUNLAP BUILDING NO. 102, A-SIDE

LOCATION: MANHATTAN PSYCHIATRIC CENTER 600 E. 125th STREET WARDS ISLAND, NY 10035

CLIENT: OFFICE OF MENTAL HEALTH

"REVISED DRAWING 12/26/2012"

MARK	DATE	DESCRIPTION
FINAL	10/3/2012	BID DOCUMENT

PROJECT NUMBER:	Q0763 – C
DESIGNED BY:	DWM
DRAWN BY:	SL, DWM
FIELD CHECK:	OGS
APPROVED:	DWM

SHEET TITLE: FOURTH FLOOR DEMOLITION AND WINDOW INSTALLATION PLAN

DRAWING NUMBER: A-105

SHEET 31 OF 56

Jan 02,2013 – 9:33am
V:\DesignAndConstr\pQ07xx\q0763\CadArch\A-105_Q0763_Rev-Add4.dwg
36x24 PLOT SHEET

MISCELLANEOUS SYMBOLS/NOTES:

- AC — AIR CONDITIONING UNIT AT WINDOW, EXISTING – REMOVE AND TURN OVER TO OMH.
- SP — SPRINKLERS, EXISTING AT ROOMS DENOTED THUS – REMOVE, REFER TO NOTE G8 ON DRAWING NUMBER A–002.
- BUO — BOARDED UP OPENING AT EXISTING WINDOW EXTERIOR – REMOVE.
- FAN — FAN, EXISTING, MOUNTED IN WINDOW – REMOVE.
- SS — SECURITY SCREEN, EXISTING STEEL SS AT INTERIOR OF EXISTING WINDOW OPENING – REMOVE.
- 2x4 — INSECT SCREEN WITH 2x4 WOOD FRAME, EXISTING – REMOVE.
- PBO — PLYWOOD BOX OUT – REMOVE.
- SD — SMOKE DETECTOR– RELOCATE, UNLESS OTHERWISE DIRECTED. REFER TO DETAIL 6/A–503 AND NOTE G8 ON DRAWING A–002
- SL — SPEAKER/STROBE LIGHT– RELOCATE, UNLESS OTHERWISE DIRECTED. REFER TO DETAIL 6/A–503 AND NOTE G8 ON DRAWING A–002
- PS — PULL STATION– RELOCATE, UNLESS OTHERWISE DIRECTED. REFER TO DETAIL 6/A–503 AND NOTE G8 ON DRAWING A–002
- PRR — PANELS AND RISERS TO REMAIN
- FHSV — EXISTING FIRE HOSE STANDPIPE & VALVE TO REMAIN FOR TEMPORARY STANDPIPE
- CSL — CAP EXISTING SPRINKLER LINE
- NSV — NO SPRINKLER VALVE THIS LOCATION
- RPW — AT ALL EXISTING WINDOW OPENINGS TO RECEIVE WINDOW REPLACEMENT– BASEMENT FLOOR AND FIRST (1ST) FLOOR THROUGH SIXTEENTH (16TH) FLOORS, INCLUSIVE: REMOVE EXISTING INTERIOR WYTHE OF EXISTING EXTERIOR WALL ASSEMBLY WHICH CONSISTS OF 3"± THICK CMU WITH PLASTER FINISH (4"± TOTAL THICKNESS). REMOVE ALL THIS EXISTING INTERIOR WYTHE ASSEMBLY (INCLUDING ALL EXISTING BASE MATERIAL WHERE APPLICABLE) FROM EXISTING WINDOW JAMB TO EXISTING WINDOW JAMB, FROM TOP OF EXISTING FINISH FLOOR TO TOP OF EXISTING WINDOW STOOL, REMOVE ALL OF THE EXISTING STEEL SECURITY RADIATOR COVER ASSEMBLIES IN THEIR ENTIRETIES. REMOVE ALL EXISTING WINDOW STOOLS. AT ALL EXISTING WINDOW JAMB RETURNS: REMOVE THOSE PORTIONS OF THE EXISTING INTERIOR WYTHE OF EXISTING EXTERIOR WALL ASSEMBLY CONSISTING OF CMU'S AND PLASTER (SEE ABOVE) THAT NEED TO BE REMOVED TO INSTALL THE WINDOW CLIPS. SEE ALSO DRAWING NUMBERS: A–501, A–502, A–510, A–511, A–512, A–513, A–514 AND A–515 FOR DETAILED INFORMATION.

GENERAL NOTES:

GN–1 FIRST FLOOR THROUGH TENTH FLOORS ARE GUT DEMOLITION – FOR THE FULL WORK AREA INDICATED AND FOR THE FULL HEIGHT, FLOOR TO FLOOR PER EACH FLOOR – UNLESS OTHERWISE SHOWN OR INDICATED. CONSTRUCTION DEMOLITION PLAN NOTE INDICATORS ((#)) ARE SHOWN ON FLOOR PLANS AS THEY ARE MORE SPECIFIC PER ROOM/AREA. YET, WHERE APPLICABLE, ALL THESE CONSTRUCTION DEMOLITION REMOVALS APPLY TO ALL THE INDICATED WORK AREAS THROUGHOUT THE FIRST THROUGH TENTH FLOORS. ALL THE REMOVALS IN THESE AREAS ARE CLEARLY CALLED OUT TO BE GUT DEMOLITION, THEREFORE THE CONTRACTOR SHALL PROVIDE ALL THESE REMOVALS AT NO ADDITIONAL COST TO THE STATE. ALL ABANDONED MECHANICAL DEMOLITION PLAN NOTES AND ALL ELECTRICAL DEMOLITION PLAN NOTES APPLY THROUGHOUT THE AREAS OF WORK THROUGHOUT THE FIRST FLOOR THROUGH TENTH FLOORS. ALL THESE ABANDONED MECHANICAL DEMOLITION ITEMS AND ALL THESE ABANDONED ELECTRICAL DEMOLITION ITEMS SHALL BE REMOVED IN THEIR ENTIRETIES AT THE FIRST FLOOR THROUGH TENTH FLOORS – FOR THE FULL WORK AREA INDICATED AND FOR THE FULL HEIGHT, FLOOR TO FLOOR PER EACH FLOOR – UNLESS OTHERWISE SHOWN OR INDICATED – AT NO ADDITIONAL COST TO THE STATE. THIS WORK INCLUDES ALL EXISTING FLOORS, WALLS, CEILINGS, DOORS, ETC, ASSOCIATED WITH THE EXISTING PLUMBING, ELECTRICAL AND MECHANICAL CHASES AND/OR EXISTING PLUMBING, ELECTRICAL AND MECHANICAL ROOMS.

GN–2 REFER TO GENERAL NOTE A ON DRAWING Nos. H–101 THRU H–117 FOR PIPING INSULATION REQUIREMENTS AT ALL UN–INSULATED EXISTING DOMESTIC HOT AND COLD PIPE AND FITTINGS.

GN–3 REFER TO GENERAL NOTE B ON DRAWING Nos. H–101 THRU H–117 FOR PIPING INSULATION REQUIREMENTS AT ALL UN–INSULATED EXISTING HEATING (STEAM AND CONDENSATE) PIPING.

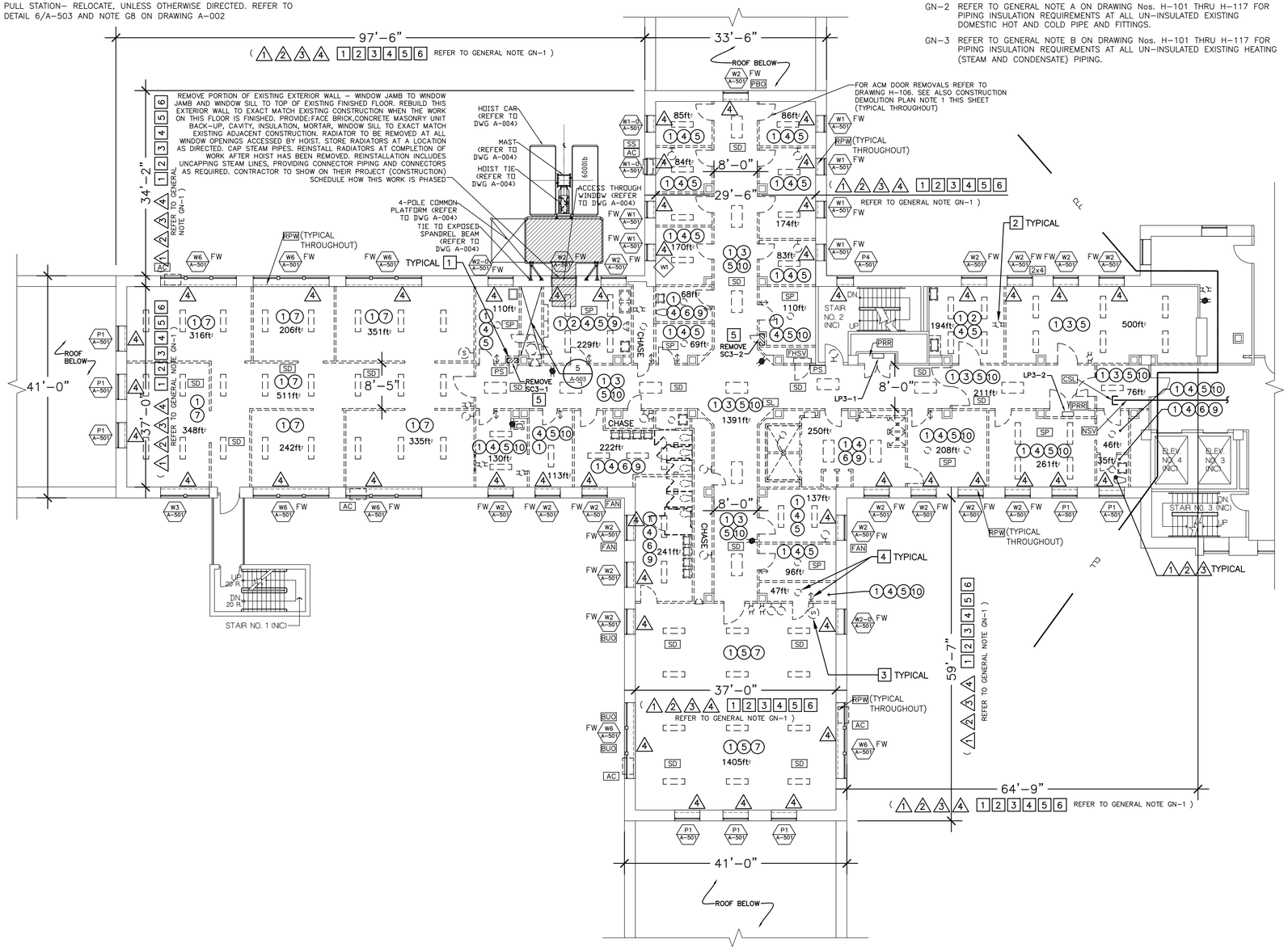

FIFTH FLOOR DEMOLITION AND WINDOW INSTALLATION PLAN
3/32" = 1'-0"

CONSTRUCTION DEMOLITION PLAN NOTES:

1. REMOVE EXISTING STEEL DOORS, STEEL FRAMES AND RELATED HARDWARE. (COORDINATE DOOR REMOVAL WITH ASBESTOS ABATEMENT WORK)
2. REMOVE EXISTING FIXED FURNITURE AND FIXED ACCESSORIES (CLOSETS, SHELVING, CASEWORK, COUNTERTOPS, WALL MOUNTED CABINETS, MIRRORS, DISPENSERS, BULLETIN BOARDS, MARBLE TOILET PARTITIONS, MARBLE SCREEN–WALLS/PARTITIONS, ETC.). TYPICAL THROUGHOUT ALL SPACES AT DEMOLITION WORK, WHETHER CALLED FOR OR NOT.
3. REMOVE EXISTING ACOUSTIC CEILING TILES, GRID SYSTEM AND SUPPORTS.
4. REMOVE EXISTING PLASTER CEILING, LATHE, BLACK IRON AND SUPPORTS.
5. REMOVE EXISTING CMU PARTITION WITH PLASTER WALL FINISH, STEEL DOOR(S), STEEL FRAME(S) AND HARDWARE, ETC. PATCH FLOOR SLAB TO REMAIN. REMOVE ALL ACCESSORIES ATTACHED TO EXISTING WALLS, SUCH AS BUT NOT LIMITED TO: WALL PROTECTION/CHAIR RAILS, GRAB BARS, ANY AND ALL ACCESSORIES, ETC.
6. REMOVE EXISTING CMU PARTITION WITH CERAMIC TILE WALL FINISH AND/OR PLASTER WALL FINISH, STEEL DOOR(S) & FRAME(S) AND HARDWARE, ETC. PATCH FLOOR SLAB TO REMAIN. REMOVE ALL ACCESSORIES ATTACHED TO EXISTING WALLS, SUCH AS BUT NOT LIMITED TO: WALL PROTECTION/CHAIR RAILS, GRAB BARS, AND ALL ACCESSORIES, ETC.
7. REMOVE EXISTING GYPSUM WALL BOARD PARTITIONS, FRAMING AND DOOR FRAMES.
8. NOT USED.
9. REMOVE EXISTING CERAMIC TILE FLOOR FINISH.
10. REMOVAL OF EXISTING VINYL ASBESTOS TILE (VAT). REFER TO ASBESTOS REMOVAL DRAWINGS.

ABANDONED MECHANICAL DEMOLITION PLAN NOTES:

1. REMOVE ALL EXISTING PLUMBING FIXTURES AND PARTITIONS.
2. REMOVE EXHAUST FAN AND ASSOCIATED DUCTWORK AND ACCESSORIES AND CAP AT MAIN.
3. REMOVE VENT, WASTE AND ALL HOT AND COLD DOMESTIC WATER LINES BACK TO RISER IN CHASE/WALL AND CAP.
4. EXISTING UNIT HEATERS AND RADIATORS TO REMAIN FOR TEMPORARY HEAT.

ABANDONED ELECTRICAL DEMOLITION PLAN NOTES:

1. REMOVE ALL ABANDONED RACEWAYS, BOXES, SUPPORTS, ETC. WHERE EXPOSED (INCLUDING THOSE LOCATED ABOVE EXISTING SUSPENDED CEILINGS), AND WHERE THEY WILL INTERFERE WITH WORK OF FUTURE REHAB PROJECT. COORDINATE WITH THE DIRECTOR'S REPRESENTATIVE.
2. DISCONNECT AND REMOVE ALL EXISTING CONDUITS, CONDUCTORS, RECEPTACLES, ETC. AS REQUIRED BACK TO EXISTING SOURCE.
3. DISCONNECT AND REMOVE EXISTING SOUND SYSTEM DEVICE(S). CIRCUITING AND ALL SYSTEM COMPONENTS BACK TO EXISTING SOUND CONSOLE.
4. DISCONNECT AND REMOVE EXISTING LIGHT FIXTURE(S), SWITCHES AND CIRCUITRY BACK TO POWER PANEL.
5. DISCONNECT AND REMOVE TELEPHONE AND ALL WIRING CONDUIT ASSOCIATED BACK TO SOURCE.
6. DISCONNECT PANEL TO BE REMOVED. PANELBOARDS AND RISERS SERVING PANELBOARDS ARE TO REMAIN.

GENERAL NOTES - ELECTRICAL:

A. CONTRACTOR SHALL IDENTIFY AND MAINTAIN THE CIRCUITS TO REMAIN ACTIVE:
1. STAIRWAY LIGHTING
2. LIGHTING AND POWER IN ELEVATOR CORE AREA
3. LIGHTING AND POWER OUTSIDE WORK AREA

B. SOURCE FOR TEMPORARY LIGHT AND POWER IS FROM THE EXISTING "PANELS AND RISERS TO REMAIN PRR"

WINDOW NOTES:

FW – FURNISHED WINDOW (ALUMINUM SECURITY WINDOW FURNISHED BY OMH)

MATERIAL	QUANTITY
ACOUSTIC CEILING TILES	875SF
PLASTER CEILING	1,350SF
GYPSUM BOARD WALLS	960SF
CERAMIC TILE FLOOR	440SF

IMPORTANT NOTE: ALL QUANTITIES LISTED ON THE DRAWINGS ARE ESTIMATES AND ARE FOR INFORMATION ONLY. THE CONTRACTOR IS RESPONSIBLE FOR REMOVING ALL MATERIALS SHOWN ON THE DRAWINGS TO BE REMOVED, WHETHER THEY ARE GREATER OR LESS THAN THE QUANTITIES LISTED ON THIS SCHEDULE OR ANYWHERE ELSE ON THE DRAWINGS OR IN THE SPECIFICATIONS. NOT ALL THE MATERIALS TO BE REMOVED ARE NOTED HERE. REFER TO THE PLANS AND THE PLAN NOTES FOR ALL THE MATERIALS THAT SHALL BE REMOVED. REFER ALSO TO NOTE GN–1 ON THIS DRAWING. REFER TO 'LEGEND KEY' ON DRAWING NUMBER A–002. REFER TO DRAWING NUMBER A–104 FOR: HVAC, PLUMBING AND ELECTRIC MATERIALS QUANTITIES.

REFERENCE DRAWING

NYS OFFICE OF GENERAL SERVICES
Serving New York
ANDREW M. CUOMO
Governor
ROANN M. DESTITO
Commissioner
JAMES M. DAVIES, A.I.A.
Deputy Commissioner, Design and Construction

CONSULTANT

KEY PLAN
A–SIDE
B–SIDE (NIC)
TRUE NORTH
PROJECT NORTH

WARNING:
THE ALTERATION OF THIS MATERIAL IN ANY WAY, UNLESS DONE UNDER THE DIRECTION OF A COMPARABLE PROFESSIONAL, I.E. ARCHITECT FOR AN ARCHITECT, ENGINEER FOR AN ENGINEER OR LANDSCAPE ARCHITECT FOR A LANDSCAPE ARCHITECT, IS A VIOLATION OF THE NEW YORK STATE EDUCATION LAW AND/OR REGULATIONS AND IS A CLASS 'A' MISDEMEANOR.

REGISTERED ARCHITECT DAVID W. MILLER 026863 STATE OF NEW YORK

CONTRACT:
CONSTRUCTION

TITLE:
ASBESTOS REMOVAL, DEMOLITION, AND REPLACE WINDOWS
DUNLAP BUILDING NO. 102, A–SIDE

LOCATION:
MANHATTAN PSYCHIATRIC CENTER
600 E. 125th STREET
WARDS ISLAND, NY 10035

CLIENT:
OFFICE OF MENTAL HEALTH

"REVISED DRAWING 12/26/2012"

MARK	DATE	DESCRIPTION
FINAL	10/3/2012	BID DOCUMENT

PROJECT NUMBER:	Q0763 – C
DESIGNED BY:	DWM
DRAWN BY:	SL, DWM
FIELD CHECK:	OGS
APPROVED:	DWM

SHEET TITLE:
FIFTH FLOOR DEMOLITION AND WINDOW INSTALLATION PLAN

DRAWING NUMBER:
A–106

SHEET 32 OF 56

Jan 02,2013 – 9:37am
V:\Designed\Const\p2007xx\Q0763\Cadkrch\A-106_Q0763_Rev-Adj04.dwg
36x24 PLOT SHEET

MISCELLANEOUS SYMBOLS/NOTES:

- AC — AIR CONDITIONING UNIT AT WINDOW, EXISTING – REMOVE AND TURN OVER TO OMH.
- SP — SPRINKLERS, EXISTING AT ROOMS DENOTED THUS – REMOVE, REFER TO NOTE G8 ON DRAWING NUMBER A–002.
- BUO — BOARDED UP OPENING AT EXISTING WINDOW EXTERIOR – REMOVE.
- FAN — FAN, EXISTING, MOUNTED IN WINDOW – REMOVE.
- SS — SECURITY SCREEN, EXISTING STEEL SS AT INTERIOR OF EXISTING WINDOW OPENING – REMOVE.
- 2x4 — INSECT SCREEN WITH 2x4 WOOD FRAME, EXISTING – REMOVE.
- PBO — PLYWOOD BOX OUT – REMOVE.
- SD — SMOKE DETECTOR– RELOCATE, UNLESS OTHERWISE DIRECTED. REFER TO DETAIL 6/A–503 AND NOTE G8 ON DRAWING A–002
- SL — SPEAKER/STROBE LIGHT– RELOCATE, UNLESS OTHERWISE DIRECTED. REFER TO DETAIL 6/A–503 AND NOTE G8 ON DRAWING A–002
- PS — PULL STATION– RELOCATE, UNLESS OTHERWISE DIRECTED. REFER TO DETAIL 6/A–503 AND NOTE G8 ON DRAWING A–002
- PRR — PANELS AND RISERS TO REMAIN
- FHSV — EXISTING FIRE HOSE STANDPIPE & VALVE TO REMAIN FOR TEMPORARY STANDPIPE
- CSL — CAP EXISTING SPRINKLER LINE
- NSV — NO SPRINKLER VALVE THIS LOCATION
- RPW — AT ALL EXISTING WINDOW OPENINGS TO RECEIVE WINDOW REPLACEMENT– BASEMENT FLOOR AND FIRST (1ST) FLOOR THROUGH SIXTEENTH (16TH) FLOORS, INCLUSIVE: REMOVE EXISTING INTERIOR WYTHE OF EXISTING EXTERIOR WALL ASSEMBLY WHICH CONSISTS OF 3"± THICK CMU WITH PLASTER FINISH (4"± TOTAL THICKNESS). REMOVE ALL THIS EXISTING INTERIOR WYTHE ASSEMBLY (INCLUDING ALL EXISTING BASE MATERIAL WHERE APPLICABLE) FROM EXISTING WINDOW JAMB TO EXISTING WINDOW JAMB, FROM TOP OF EXISTING FINISH FLOOR TO TOP OF EXISTING WINDOW STOOL, REMOVE ALL OF THE EXISTING STEEL SECURITY RADIATOR COVER ASSEMBLIES IN THEIR ENTIRETIES. REMOVE ALL EXISTING WINDOW STOOLS. AT ALL EXISTING WINDOW JAMB RETURNS: REMOVE THOSE PORTIONS OF THE EXISTING INTERIOR WYTHE OF EXISTING EXTERIOR WALL ASSEMBLY CONSISTING OF CMU'S AND PLASTER (SEE ABOVE) THAT NEED TO BE REMOVED TO INSTALL THE WINDOW CLIPS. SEE ALSO DRAWING NUMBERS: A–501, A–502, A–510, A–511, A–512, A–513, A–514 AND A–515 FOR DETAILED INFORMATION.

GENERAL NOTES:

GN–1 FIRST FLOOR THROUGH TENTH FLOORS ARE GUT DEMOLITION – FOR THE FULL WORK AREA INDICATED AND FOR THE FULL HEIGHT, FLOOR TO FLOOR PER EACH FLOOR – UNLESS OTHERWISE SHOWN OR INDICATED. CONSTRUCTION DEMOLITION PLAN NOTE INDICATORS (#) ARE SHOWN ON FLOOR PLANS AS THEY ARE MORE SPECIFIC PER ROOM/AREA. YET, WHERE APPLICABLE, ALL THESE CONSTRUCTION DEMOLITION REMOVALS APPLY TO ALL THE INDICATED WORK AREAS THROUGHOUT THE FIRST THROUGH TENTH FLOORS. ALL THE REMOVALS IN THESE AREAS ARE CLEARLY CALLED OUT TO BE GUT DEMOLITION, THEREFORE THE CONTRACTOR SHALL PROVIDE ALL THESE REMOVALS AT NO ADDITIONAL COST TO THE STATE. ALL ABANDONED MECHANICAL DEMOLITION PLAN NOTES AND ALL ELECTRICAL DEMOLITION PLAN NOTES APPLY THROUGHOUT THE AREAS OF WORK THROUGHOUT THE FIRST FLOOR THROUGH TENTH FLOORS. ALL THESE ABANDONED MECHANICAL DEMOLITION ITEMS AND ALL THESE ABANDONED ELECTRICAL DEMOLITION ITEMS SHALL BE REMOVED IN THEIR ENTIRETIES AT THE FIRST FLOOR THROUGH TENTH FLOORS – FOR THE FULL WORK AREA INDICATED AND FOR THE FULL HEIGHT, FLOOR TO FLOOR PER EACH FLOOR – UNLESS OTHERWISE SHOWN OR INDICATED – AT NO ADDITIONAL COST TO THE STATE. THIS WORK INCLUDES ALL EXISTING FLOORS, WALLS, CEILINGS, DOORS, ETC, ASSOCIATED WITH THE EXISTING PLUMBING, ELECTRICAL AND MECHANICAL CHASES AND/OR EXISTING PLUMBING, ELECTRICAL AND MECHANICAL ROOMS.

GN–2 REFER TO GENERAL NOTE A ON DRAWING Nos. H–101 THRU H–117 FOR PIPING INSULATION REQUIREMENTS AT ALL UN–INSULATED EXISTING DOMESTIC HOT AND COLD PIPE AND FITTINGS.

GN–3 REFER TO GENERAL NOTE B ON DRAWING Nos. H–101 THRU H–117 FOR PIPING INSULATION REQUIREMENTS AT ALL UN–INSULATED EXISTING HEATING (STEAM AND CONDENSATE) PIPING.

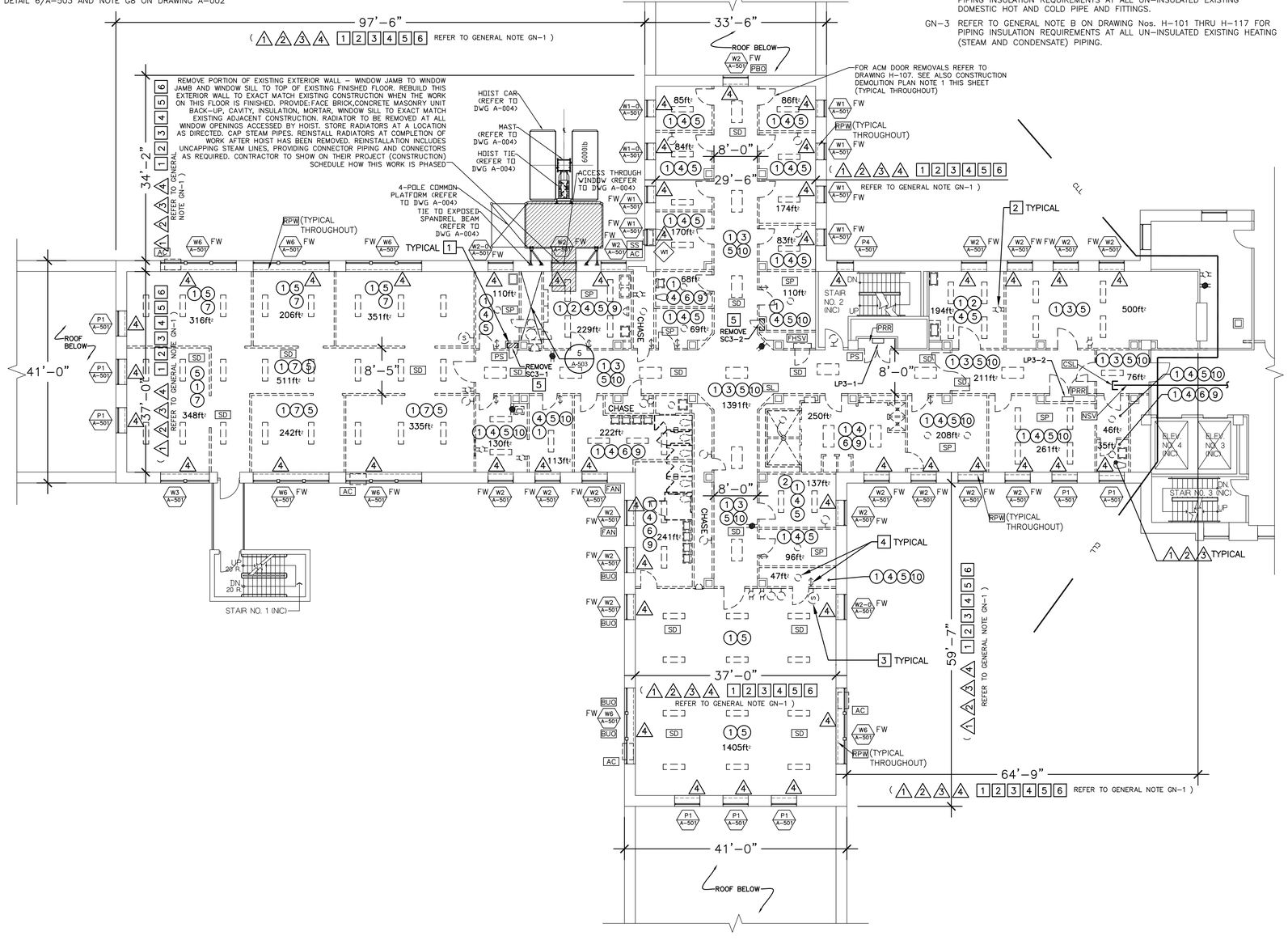

SIXTH FLOOR DEMOLITION AND WINDOW INSTALLATION PLAN

3/32" = 1'-0"

REFERENCE DRAWING

CONSTRUCTION DEMOLITION PLAN NOTES:

1. REMOVE EXISTING STEEL DOORS, STEEL FRAMES AND RELATED HARDWARE. (COORDINATE DOOR REMOVAL WITH ASBESTOS ABATEMENT WORK)
2. REMOVE EXISTING FIXED FURNITURE AND FIXED ACCESSORIES (CLOSETS, SHELVING, CASEWORK, COUNTERTOPS, WALL MOUNTED CABINETS, MIRRORS, DISPENSERS, BULLETIN BOARDS, MARBLE TOILET PARTITIONS, MARBLE SCREEN–WALLS/PARTITIONS, ETC.). TYPICAL THROUGHOUT ALL SPACES AT DEMOLITION WORK, WHETHER CALLED FOR OR NOT.
3. REMOVE EXISTING ACOUSTIC CEILING TILES, GRID SYSTEM AND SUPPORTS.
4. REMOVE EXISTING PLASTER CEILING, LATHE, BLACK IRON AND SUPPORTS.
5. REMOVE EXISTING CMU PARTITION WITH PLASTER WALL FINISH, STEEL DOOR(S), STEEL FRAME(S) AND HARDWARE, ETC. PATCH FLOOR SLAB TO REMAIN. REMOVE ALL ACCESSORIES ATTACHED TO EXISTING WALLS, SUCH AS BUT NOT LIMITED TO: WALL PROTECTION/CHAIR RAILS, GRAB BARS, ANY AND ALL ACCESSORIES, ETC.
6. REMOVE EXISTING CMU PARTITION WITH CERAMIC TILE WALL FINISH AND/OR PLASTER WALL FINISH, STEEL DOOR(S) & FRAME(S) AND HARDWARE, ETC. PATCH FLOOR SLAB TO REMAIN. REMOVE ALL ACCESSORIES ATTACHED TO EXISTING WALLS, SUCH AS BUT NOT LIMITED TO: WALL PROTECTION/CHAIR RAILS, GRAB BARS, AND ALL ACCESSORIES, ETC.
7. REMOVE EXISTING GYPSUM WALL BOARD PARTITIONS, FRAMING AND DOOR FRAMES.
8. NOT USED.
9. REMOVE EXISTING CERAMIC TILE FLOOR FINISH.
10. REMOVAL OF EXISTING VINYL ASBESTOS TILE (VAT). REFER TO ASBESTOS REMOVAL DRAWINGS.

ABANDONED MECHANICAL DEMOLITION PLAN NOTES:

1. REMOVE ALL EXISTING PLUMBING FIXTURES AND PARTITIONS.
2. REMOVE EXHAUST FAN AND ASSOCIATED DUCTWORK AND ACCESSORIES AND CAP AT MAIN.
3. REMOVE VENT, WASTE AND ALL HOT AND COLD DOMESTIC WATER LINES BACK TO RISER IN CHASE/WALL AND CAP.
4. EXISTING UNIT HEATERS AND RADIATORS TO REMAIN FOR TEMPORARY HEAT.

ABANDONED ELECTRICAL DEMOLITION PLAN NOTES:

1. REMOVE ALL ABANDONED RACEWAYS, BOXES, SUPPORTS, ETC. WHERE EXPOSED (INCLUDING THOSE LOCATED ABOVE EXISTING SUSPENDED CEILINGS), AND WHERE THEY WILL INTERFERE WITH WORK OF FUTURE REHAB PROJECT. COORDINATE WITH THE DIRECTOR'S REPRESENTATIVE.
2. DISCONNECT AND REMOVE ALL EXISTING CONDUITS, CONDUCTORS, RECEPTACLES, ETC. AS REQUIRED BACK TO EXISTING SOURCE.
3. DISCONNECT AND REMOVE EXISTING SOUND SYSTEM DEVICE(S). CIRCUITING AND ALL SYSTEM COMPONENTS BACK TO EXISTING SOUND CONSOLE.
4. DISCONNECT AND REMOVE EXISTING LIGHT FIXTURE(S), SWITCHES AND CIRCUITRY BACK TO POWER PANEL.
5. DISCONNECT AND REMOVE TELEPHONE AND ALL WIRING CONDUIT ASSOCIATED BACK TO SOURCE.
6. DISCONNECT PANEL TO BE REMOVED. PANELBOARDS AND RISERS SERVING PANELBOARDS ARE TO REMAIN.

GENERAL NOTES - ELECTRICAL:

A. CONTRACTOR SHALL IDENTIFY AND MAINTAIN THE CIRCUITS TO REMAIN ACTIVE:
1. STAIRWAY LIGHTING
2. LIGHTING AND POWER IN ELEVATOR CORE AREA
3. LIGHTING AND POWER OUTSIDE WORK AREA

B. SOURCE FOR TEMPORARY LIGHT AND POWER IS FROM THE EXISTING "PANELS AND RISERS TO REMAIN PRR"

WINDOW NOTES:

FW – FURNISHED WINDOW (ALUMINUM SECURITY WINDOW FURNISHED BY OMH)

MATERIAL	QUANTITY
ACOUSTIC CEILING TILES	875SF
PLASTER CEILING	1,350SF
GYPSUM BOARD WALLS	960SF
CERAMIC TILE FLOOR	440SF

IMPORTANT NOTE: ALL QUANTITIES LISTED ON THE DRAWINGS ARE ESTIMATES AND ARE FOR INFORMATION ONLY. THE CONTRACTOR IS RESPONSIBLE FOR REMOVING ALL MATERIALS SHOWN ON THE DRAWINGS TO BE REMOVED, WHETHER THEY ARE GREATER OR LESS THAN THE QUANTITIES LISTED ON THIS SCHEDULE OR ANYWHERE ELSE ON THE DRAWINGS OR IN THE SPECIFICATIONS. NOT ALL THE MATERIALS TO BE REMOVED ARE NOTED HERE. REFER TO THE PLANS AND THE PLAN NOTES FOR ALL THE MATERIALS THAT SHALL BE REMOVED. REFER ALSO TO NOTE GN–1 ON THIS DRAWING. REFER TO 'LEGEND KEY' ON DRAWING NUMBER A–002. REFER TO DRAWING NUMBER A–104 FOR: HVAC, PLUMBING AND ELECTRIC MATERIALS QUANTITIES.

NYS OFFICE OF GENERAL SERVICES

Serving New York

ANDREW M. CUOMO
Governor
ROANN M. DESTITO
Commissioner
JAMES M. DAVIES, A.I.A.
Deputy Commissioner, Design and Construction

CONSULTANT

KEY PLAN

A–SIDE B–SIDE (NIC)

TRUE NORTH

PROJECT NORTH

WARNING:

THE ALTERATION OF THIS MATERIAL IN ANY WAY, UNLESS DONE UNDER THE DIRECTION OF A COMPARABLE PROFESSIONAL, I.E. ARCHITECT FOR AN ARCHITECT, ENGINEER FOR AN ENGINEER OR LANDSCAPE ARCHITECT FOR A LANDSCAPE ARCHITECT, IS A VIOLATION OF THE NEW YORK STATE EDUCATION LAW AND/OR REGULATIONS AND IS A CLASS 'A' MISDEMEANOR.

REGISTERED ARCHITECT DAVID W. MILLER 026863 STATE OF NEW YORK

CONTRACT:
CONSTRUCTION

TITLE:
ASBESTOS REMOVAL, DEMOLITION, AND REPLACE WINDOWS
DUNLAP BUILDING NO. 102, A–SIDE

LOCATION:
MANHATTAN PSYCHIATRIC CENTER
600 E. 125th STREET
WARDS ISLAND, NY 10035

CLIENT:
OFFICE OF MENTAL HEALTH

"REVISED DRAWING 12/26/2012"

MARK	DATE	DESCRIPTION
FINAL	10/3/2012	BID DOCUMENT

PROJECT NUMBER:	Q0763 – C
DESIGNED BY:	DWM
DRAWN BY:	SL, DWM
FIELD CHECK:	OGS
APPROVED:	DWM

SHEET TITLE:
SIXTH FLOOR DEMOLITION AND WINDOW INSTALLATION PLAN

DRAWING NUMBER:
A–107

SHEET 33 OF 56

Jan 02,2013 – 9:48am
V:\Designed\Const\p007xx\q0763\CadArch\A–107_Q0763_Rev–Add4.dwg
36x24 PLOT SHEET

MISCELLANEOUS SYMBOLS/NOTES:

- AC — AIR CONDITIONING UNIT AT WINDOW, EXISTING – REMOVE AND TURN OVER TO OMH.
- SP — SPRINKLERS, EXISTING AT ROOMS DENOTED THUS – REMOVE, REFER TO NOTE G8 ON DRAWING NUMBER A-002.
- BUO — BOARDED UP OPENING AT EXISTING WINDOW EXTERIOR – REMOVE.
- FAN — FAN, EXISTING, MOUNTED IN WINDOW – REMOVE.
- SS — SECURITY SCREEN, EXISTING STEEL SS AT INTERIOR OF EXISTING WINDOW OPENING – REMOVE.
- 2x4 — INSECT SCREEN WITH 2x4 WOOD FRAME, EXISTING – REMOVE.
- PBO — PLYWOOD BOX OUT – REMOVE.
- SD — SMOKE DETECTOR– RELOCATE, UNLESS OTHERWISE DIRECTED. REFER TO DETAIL 6/A-503 AND NOTE G8 ON DRAWING A-002
- SL — SPEAKER/STROBE LIGHT– RELOCATE, UNLESS OTHERWISE DIRECTED. REFER TO DETAIL 6/A-503 AND NOTE G8 ON DRAWING A-002
- PS — PULL STATION– RELOCATE, UNLESS OTHERWISE DIRECTED. REFER TO DETAIL 6/A-503 AND NOTE G8 ON DRAWING A-002
- PRR — PANELS AND RISERS TO REMAIN
- FHSV — EXISTING FIRE HOSE STANDPIPE & VALVE TO REMAIN FOR TEMPORARY STANDPIPE
- CSL — CAP EXISTING SPRINKLER LINE
- NSV — NO SPRINKLER VALVE THIS LOCATION
- RPW — AT ALL EXISTING WINDOW OPENINGS TO RECEIVE WINDOW REPLACEMENT– BASEMENT FLOOR AND FIRST (1ST) FLOOR THROUGH SIXTEENTH (16TH) FLOORS, INCLUSIVE: REMOVE EXISTING INTERIOR WYTHE OF EXISTING EXTERIOR WALL ASSEMBLY WHICH CONSISTS OF 3"± THICK CMU WITH PLASTER FINISH (4"± TOTAL THICKNESS). REMOVE ALL THIS EXISTING INTERIOR WYTHE ASSEMBLY (INCLUDING ALL EXISTING BASE MATERIAL WHERE APPLICABLE) FROM EXISTING WINDOW JAMB TO EXISTING WINDOW JAMB, FROM TOP OF EXISTING FINISH FLOOR TO TOP OF EXISTING WINDOW STOOL, REMOVE ALL OF THE EXISTING STEEL SECURITY RADIATOR COVER ASSEMBLIES IN THEIR ENTIRETIES. REMOVE ALL EXISTING WINDOW STOOLS. AT ALL EXISTING WINDOW JAMB RETURNS: REMOVE THOSE PORTIONS OF THE EXISTING INTERIOR WYTHE OF EXISTING EXTERIOR WALL ASSEMBLY CONSISTING OF CMU'S AND PLASTER (SEE ABOVE) THAT NEED TO BE REMOVED TO INSTALL THE WINDOW CLIPS. SEE ALSO DRAWING NUMBERS: A-501, A-502, A-510, A-511, A-512, A-513, A-514 AND A-515 FOR DETAILED INFORMATION.

GENERAL NOTES:

GN-1 FIRST FLOOR THROUGH TENTH FLOORS ARE GUT DEMOLITION – FOR THE FULL WORK AREA INDICATED AND FOR THE FULL HEIGHT, FLOOR TO FLOOR PER EACH FLOOR – UNLESS OTHERWISE SHOWN OR INDICATED. CONSTRUCTION DEMOLITION PLAN NOTE INDICATORS ((#)) ARE SHOWN ON FLOOR PLANS AS THEY ARE MORE SPECIFIC PER ROOM/AREA. YET, WHERE APPLICABLE, ALL THESE CONSTRUCTION DEMOLITION REMOVALS APPLY TO ALL THE INDICATED WORK AREAS THROUGHOUT THE FIRST THROUGH TENTH FLOORS. ALL THE REMOVALS IN THESE AREAS ARE CLEARLY CALLED OUT TO BE GUT DEMOLITION, THEREFORE THE CONTRACTOR SHALL PROVIDE ALL THESE REMOVALS AT NO ADDITIONAL COST TO THE STATE. ALL ABANDONED MECHANICAL DEMOLITION PLAN NOTES AND ALL ELECTRICAL DEMOLITION PLAN NOTES APPLY THROUGHOUT THE AREAS OF WORK THROUGHOUT THE FIRST FLOOR THROUGH TENTH FLOORS. ALL THESE ABANDONED MECHANICAL DEMOLITION ITEMS AND ALL THESE ABANDONED ELECTRICAL DEMOLITION ITEMS SHALL BE REMOVED IN THEIR ENTIRETIES AT THE FIRST FLOOR THROUGH TENTH FLOORS – FOR THE FULL WORK AREA INDICATED AND FOR THE FULL HEIGHT, FLOOR TO FLOOR PER EACH FLOOR – UNLESS OTHERWISE SHOWN OR INDICATED – AT NO ADDITIONAL COST TO THE STATE. THIS WORK INCLUDES ALL EXISTING FLOORS, WALLS, CEILINGS, DOORS, ETC, ASSOCIATED WITH THE EXISTING PLUMBING, ELECTRICAL AND MECHANICAL CHASES AND/OR EXISTING PLUMBING, ELECTRICAL AND MECHANICAL ROOMS.

GN-2 REFER TO GENERAL NOTE A ON DRAWING Nos. H-101 THRU H-117 FOR PIPING INSULATION REQUIREMENTS AT ALL UN-INSULATED EXISTING DOMESTIC HOT AND COLD PIPE AND FITTINGS.

GN-3 REFER TO GENERAL NOTE B ON DRAWING Nos. H-101 THRU H-117 FOR PIPING INSULATION REQUIREMENTS AT ALL UN-INSULATED EXISTING HEATING (STEAM AND CONDENSATE) PIPING.

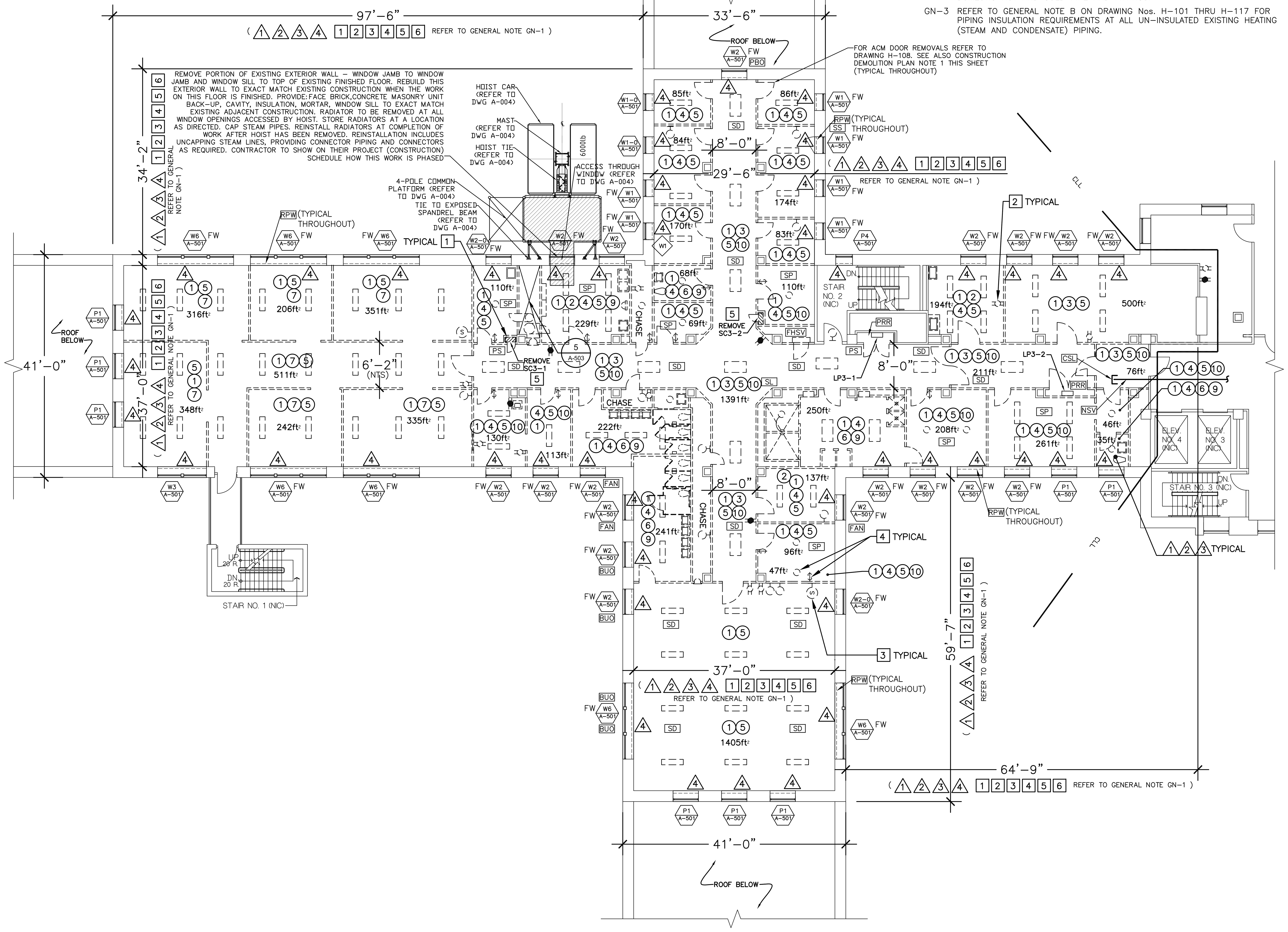

SEVENTH FLOOR DEMOLITION AND WINDOW INSTALLATION PLAN
3/32" = 1'-0"

REFERENCE DRAWING

CONSTRUCTION DEMOLITION PLAN NOTES:

1. REMOVE EXISTING STEEL DOORS, STEEL FRAMES AND RELATED HARDWARE. (COORDINATE DOOR REMOVAL WITH ASBESTOS ABATEMENT WORK)
2. REMOVE EXISTING FIXED FURNITURE AND FIXED ACCESSORIES (CLOSETS, SHELVING, CASEWORK, COUNTERTOPS, WALL MOUNTED CABINETS, MIRRORS, DISPENSERS, BULLETIN BOARDS, MARBLE TOILET PARTITIONS, MARBLE SCREEN-WALLS/PARTITIONS, ETC.). TYPICAL THROUGHOUT ALL SPACES AT DEMOLITION WORK, WHETHER CALLED FOR OR NOT.
3. REMOVE EXISTING ACOUSTIC CEILING TILES, GRID SYSTEM AND SUPPORTS.
4. REMOVE EXISTING PLASTER CEILING, LATHE, BLACK IRON AND SUPPORTS.
5. REMOVE EXISTING CMU PARTITION WITH PLASTER WALL FINISH, STEEL DOOR(S), STEEL FRAME(S) AND HARDWARE, ETC. PATCH FLOOR SLAB TO REMAIN. REMOVE ALL ACCESSORIES ATTACHED TO EXISTING WALLS, SUCH AS BUT NOT LIMITED TO: WALL PROTECTION/CHAIR RAILS, GRAB BARS, ANY AND ALL ACCESSORIES, ETC.
6. REMOVE EXISTING CMU PARTITION WITH CERAMIC TILE WALL FINISH AND/OR PLASTER WALL FINISH, STEEL DOOR(S) & FRAME(S) AND HARDWARE, ETC. PATCH FLOOR SLAB TO REMAIN. REMOVE ALL ACCESSORIES ATTACHED TO EXISTING WALLS, SUCH AS BUT NOT LIMITED TO: WALL PROTECTION/CHAIR RAILS, GRAB BARS, AND ALL ACCESSORIES, ETC.
7. REMOVE EXISTING GYPSUM WALL BOARD PARTITIONS, FRAMING AND DOOR FRAMES.
8. NOT USED.
9. REMOVE EXISTING CERAMIC TILE FLOOR FINISH.
10. REMOVAL OF EXISTING VINYL ASBESTOS TILE (VAT). REFER TO ASBESTOS REMOVAL DRAWINGS.

ABANDONED MECHANICAL DEMOLITION PLAN NOTES:

1. REMOVE ALL EXISTING PLUMBING FIXTURES AND PARTITIONS.
2. REMOVE EXHAUST FAN AND ASSOCIATED DUCTWORK AND ACCESSORIES AND CAP AT MAIN.
3. REMOVE VENT, WASTE AND ALL HOT AND COLD DOMESTIC WATER LINES BACK TO RISER IN CHASE/WALL AND CAP.
4. EXISTING UNIT HEATERS AND RADIATORS TO REMAIN FOR TEMPORARY HEAT.

ABANDONED ELECTRICAL DEMOLITION PLAN NOTES:

1. REMOVE ALL ABANDONED RACEWAYS, BOXES, SUPPORTS, ETC. WHERE EXPOSED (INCLUDING THOSE LOCATED ABOVE EXISTING SUSPENDED CEILINGS), AND WHERE THEY WILL INTERFERE WITH WORK OF FUTURE REHAB PROJECT. COORDINATE WITH THE DIRECTOR'S REPRESENTATIVE.
2. DISCONNECT AND REMOVE ALL EXISTING CONDUITS, CONDUCTORS, RECEPTACLES, ETC. AS REQUIRED BACK TO EXISTING SOURCE.
3. DISCONNECT AND REMOVE EXISTING SOUND SYSTEM DEVICE(S). CIRCUITING AND ALL SYSTEM COMPONENTS BACK TO EXISTING SOUND CONSOLE.
4. DISCONNECT AND REMOVE EXISTING LIGHT FIXTURE(S), SWITCHES AND CIRCUITRY BACK TO POWER PANEL.
5. DISCONNECT AND REMOVE TELEPHONE AND ALL WIRING CONDUIT ASSOCIATED BACK TO SOURCE.
6. DISCONNECT PANEL TO BE REMOVED. PANELBOARDS AND RISERS SERVING PANELBOARDS ARE TO REMAIN.

GENERAL NOTES - ELECTRICAL:

A. CONTRACTOR SHALL IDENTIFY AND MAINTAIN THE CIRCUITS TO REMAIN ACTIVE:
1. STAIRWAY LIGHTING
2. LIGHTING AND POWER IN ELEVATOR CORE AREA
3. LIGHTING AND POWER OUTSIDE WORK AREA

B. SOURCE FOR TEMPORARY LIGHT AND POWER IS FROM THE EXISTING "PANELS AND RISERS TO REMAIN PRR"

WINDOW NOTES:

FW – FURNISHED WINDOW (ALUMINUM SECURITY WINDOW FURNISHED BY OMH)

MATERIAL	QUANTITY
ACOUSTIC CEILING TILES	875SF
PLASTER CEILING	1,350SF
GYPSUM BOARD WALLS	960SF
CERAMIC TILE FLOOR	440SF

IMPORTANT NOTE: ALL QUANTITIES LISTED ON THE DRAWINGS ARE ESTIMATES AND ARE FOR INFORMATION ONLY. THE CONTRACTOR IS RESPONSIBLE FOR REMOVING ALL MATERIALS SHOWN ON THE DRAWINGS TO BE REMOVED, WHETHER THEY ARE GREATER OR LESS THAN THE QUANTITIES LISTED ON THIS SCHEDULE OR ANYWHERE ELSE ON THE DRAWINGS OR IN THE SPECIFICATIONS. NOT ALL THE MATERIALS TO BE REMOVED ARE NOTED HERE. REFER TO THE PLANS AND THE PLAN NOTES FOR ALL THE MATERIALS THAT SHALL BE REMOVED. REFER ALSO TO NOTE GN-1 ON THIS DRAWING. REFER TO 'LEGEND KEY' ON DRAWING NUMBER A-002. REFER TO DRAWING NUMBER A-104 FOR: HVAC, PLUMBING AND ELECTRIC MATERIALS QUANTITIES.

NYS OFFICE OF GENERAL SERVICES
Serving New York
ANDREW M. CUOMO, Governor
ROANN M. DESTITO, Commissioner
JAMES M. DAVIES, A.I.A., Deputy Commissioner, Design and Construction

CONSULTANT

KEY PLAN — A-SIDE, B-SIDE (NIC), TRUE NORTH, PROJECT NORTH

WARNING:
THE ALTERATION OF THIS MATERIAL IN ANY WAY, UNLESS DONE UNDER THE DIRECTION OF A COMPARABLE PROFESSIONAL, I.E. ARCHITECT FOR AN ARCHITECT, ENGINEER FOR AN ENGINEER OR LANDSCAPE ARCHITECT FOR A LANDSCAPE ARCHITECT, IS A VIOLATION OF THE NEW YORK STATE EDUCATION LAW AND/OR REGULATIONS AND IS A CLASS 'A' MISDEMEANOR.

REGISTERED ARCHITECT — DAVID W. MILLER — 026832 — STATE OF NEW YORK

CONTRACT: CONSTRUCTION

TITLE: ASBESTOS REMOVAL, DEMOLITION, AND REPLACE WINDOWS DUNLAP BUILDING NO. 102, A-SIDE

LOCATION: MANHATTAN PSYCHIATRIC CENTER 600 E. 125th STREET WARDS ISLAND, NY 10035

CLIENT: OFFICE OF MENTAL HEALTH

"REVISED DRAWING 12/26/2012"

MARK	DATE	DESCRIPTION
FINAL	10/3/2012	BID DOCUMENT

PROJECT NUMBER:	Q0763 – C
DESIGNED BY:	DWM
DRAWN BY:	SL, DWM
FIELD CHECK:	OGS
APPROVED:	DWM

SHEET TITLE: SEVENTH FLOOR DEMOLITION AND WINDOW INSTALLATION PLAN

DRAWING NUMBER: A-108

SHEET 34 OF 56

Jan 02,2013 – 9:56am
V:\DesignAndConstr\pQ07xx\q0763\CadArch\A-108_Q0763_Rev-Add4.dwg
36x24 PLOT SHEET

MISCELLANEOUS SYMBOLS/NOTES:

- AC — AIR CONDITIONING UNIT AT WINDOW, EXISTING – REMOVE AND TURN OVER TO OMH.
- SP — SPRINKLERS, EXISTING AT ROOMS DENOTED THUS – REMOVE, REFER TO NOTE G8 ON DRAWING NUMBER A-002.
- BUO — BOARDED UP OPENING AT EXISTING WINDOW EXTERIOR – REMOVE.
- FAN — FAN, EXISTING, MOUNTED IN WINDOW – REMOVE.
- SS — SECURITY SCREEN, EXISTING STEEL SS AT INTERIOR OF EXISTING WINDOW OPENING – REMOVE.
- 2x4 — INSECT SCREEN WITH 2x4 WOOD FRAME, EXISTING – REMOVE.
- PBO — PLYWOOD BOX OUT – REMOVE.
- SD — SMOKE DETECTOR– RELOCATE, UNLESS OTHERWISE DIRECTED. REFER TO DETAIL 6/A-503 AND NOTE G8 ON DRAWING A-002
- SL — SPEAKER/STROBE LIGHT– RELOCATE, UNLESS OTHERWISE DIRECTED. REFER TO DETAIL 6/A-503 AND NOTE G8 ON DRAWING A-002
- PS — PULL STATION– RELOCATE, UNLESS OTHERWISE DIRECTED. REFER TO DETAIL 6/A-503 AND NOTE G8 ON DRAWING A-002
- PRR — PANELS AND RISERS TO REMAIN
- FHSV — EXISTING FIRE HOSE STANDPIPE & VALVE TO REMAIN FOR TEMPORARY STANDPIPE
- CSL — CAP EXISTING SPRINKLER LINE
- NSV — NO SPRINKLER VALVE THIS LOCATION
- RPW — AT ALL EXISTING WINDOW OPENINGS TO RECEIVE WINDOW REPLACEMENT– BASEMENT FLOOR AND FIRST (1ST) FLOOR THROUGH SIXTEENTH (16TH) FLOORS, INCLUSIVE: REMOVE EXISTING INTERIOR WYTHE OF EXISTING EXTERIOR WALL ASSEMBLY WHICH CONSISTS OF 3"± THICK CMU WITH PLASTER FINISH (4"± TOTAL THICKNESS). REMOVE ALL THIS EXISTING INTERIOR WYTHE ASSEMBLY (INCLUDING ALL EXISTING BASE MATERIAL WHERE APPLICABLE) FROM EXISTING WINDOW JAMB TO EXISTING WINDOW JAMB, FROM TOP OF EXISTING FINISH FLOOR TO TOP OF EXISTING WINDOW STOOL, REMOVE ALL OF THE EXISTING STEEL SECURITY RADIATOR COVER ASSEMBLIES IN THEIR ENTIRETIES. REMOVE ALL EXISTING WINDOW STOOLS. AT ALL EXISTING WINDOW JAMB RETURNS: REMOVE THOSE PORTIONS OF THE EXISTING INTERIOR WYTHE OF EXISTING EXTERIOR WALL ASSEMBLY CONSISTING OF CMU'S AND PLASTER (SEE ABOVE) THAT NEED TO BE REMOVED TO INSTALL THE WINDOW CLIPS. SEE ALSO DRAWING NUMBERS: A-501, A-502, A-510, A-511, A-512, A-513, A-514 AND A-515 FOR DETAILED INFORMATION.

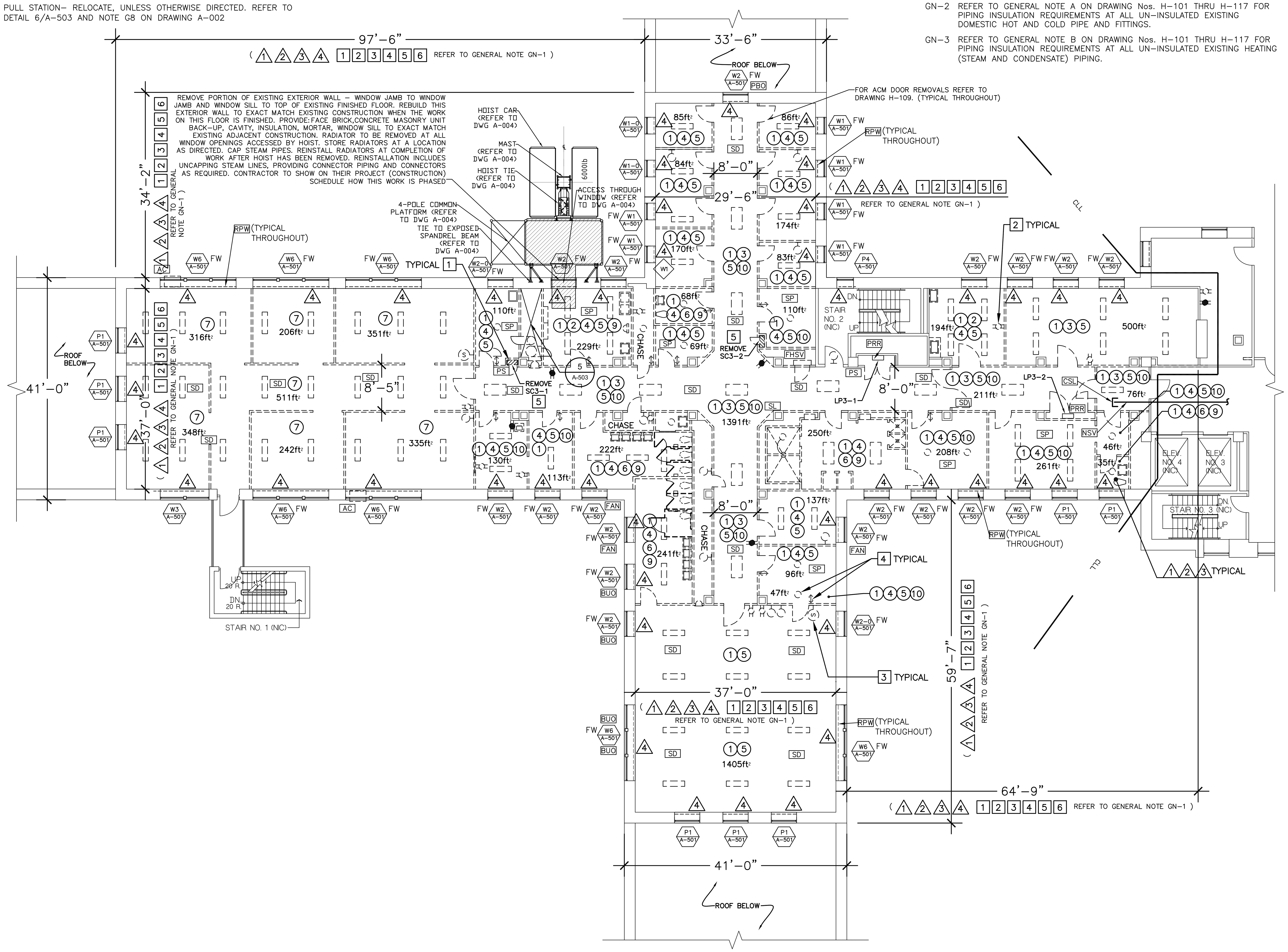

EIGHTH FLOOR DEMOLITION AND WINDOW INSTALLATION PLAN
3/32" = 1'-0"

GENERAL NOTES:

GN-1 FIRST FLOOR THROUGH TENTH FLOORS ARE GUT DEMOLITION – FOR THE FULL WORK AREA INDICATED AND FOR THE FULL HEIGHT, FLOOR TO FLOOR PER EACH FLOOR – UNLESS OTHERWISE SHOWN OR INDICATED. CONSTRUCTION DEMOLITION PLAN NOTE INDICATORS ((#)) ARE SHOWN ON FLOOR PLANS AS THEY ARE MORE SPECIFIC PER ROOM/AREA. YET, WHERE APPLICABLE, ALL THESE CONSTRUCTION DEMOLITION REMOVALS APPLY TO ALL THE INDICATED WORK AREAS THROUGHOUT THE FIRST THROUGH TENTH FLOORS. ALL THE REMOVALS IN THESE AREAS ARE CLEARLY CALLED OUT TO BE GUT DEMOLITION, THEREFORE THE CONTRACTOR SHALL PROVIDE ALL THESE REMOVALS AT NO ADDITIONAL COST TO THE STATE. ALL ABANDONED MECHANICAL DEMOLITION PLAN NOTES AND ALL ELECTRICAL DEMOLITION PLAN NOTES APPLY THROUGHOUT THE AREAS OF WORK THROUGHOUT THE FIRST FLOOR THROUGH TENTH FLOORS. ALL THESE ABANDONED MECHANICAL DEMOLITION ITEMS AND ALL THESE ABANDONED ELECTRICAL DEMOLITION ITEMS SHALL BE REMOVED IN THEIR ENTIRETIES AT THE FIRST FLOOR THROUGH TENTH FLOORS – FOR THE FULL WORK AREA INDICATED AND FOR THE FULL HEIGHT, FLOOR TO FLOOR PER EACH FLOOR – UNLESS OTHERWISE SHOWN OR INDICATED – AT NO ADDITIONAL COST TO THE STATE. THIS WORK INCLUDES ALL EXISTING FLOORS, WALLS, CEILINGS, DOORS, ETC, ASSOCIATED WITH THE EXISTING PLUMBING, ELECTRICAL AND MECHANICAL CHASES AND/OR EXISTING PLUMBING, ELECTRICAL AND MECHANICAL ROOMS.

GN-2 REFER TO GENERAL NOTE A ON DRAWING Nos. H-101 THRU H-117 FOR PIPING INSULATION REQUIREMENTS AT ALL UN-INSULATED EXISTING DOMESTIC HOT AND COLD PIPE AND FITTINGS.

GN-3 REFER TO GENERAL NOTE B ON DRAWING Nos. H-101 THRU H-117 FOR PIPING INSULATION REQUIREMENTS AT ALL UN-INSULATED EXISTING HEATING (STEAM AND CONDENSATE) PIPING.

CONSTRUCTION DEMOLITION PLAN NOTES:

1. REMOVE EXISTING STEEL DOORS, STEEL FRAMES AND RELATED HARDWARE. (COORDINATE DOOR REMOVAL WITH ASBESTOS ABATEMENT WORK)
2. REMOVE EXISTING FIXED FURNITURE AND FIXED ACCESSORIES (CLOSETS, SHELVING, CASEWORK, COUNTERTOPS, WALL MOUNTED CABINETS, MIRRORS, DISPENSERS, BULLETIN BOARDS, MARBLE TOILET PARTITIONS, MARBLE SCREEN-WALLS/PARTITIONS, ETC.). TYPICAL THROUGHOUT ALL SPACES AT DEMOLITION WORK, WHETHER CALLED FOR OR NOT.
3. REMOVE EXISTING ACOUSTIC CEILING TILES, GRID SYSTEM AND SUPPORTS.
4. REMOVE EXISTING PLASTER CEILING, LATHE, BLACK IRON AND SUPPORTS.
5. REMOVE EXISTING CMU PARTITION WITH PLASTER WALL FINISH, STEEL DOOR(S), STEEL FRAME(S) AND HARDWARE, ETC. PATCH FLOOR SLAB TO REMAIN. REMOVE ALL ACCESSORIES ATTACHED TO EXISTING WALLS, SUCH AS BUT NOT LIMITED TO: WALL PROTECTION/CHAIR RAILS, GRAB BARS, ANY AND ALL ACCESSORIES, ETC.
6. REMOVE EXISTING CMU PARTITION WITH CERAMIC TILE WALL FINISH AND/OR PLASTER WALL FINISH, STEEL DOOR(S) & FRAME(S) AND HARDWARE, ETC. PATCH FLOOR SLAB TO REMAIN. REMOVE ALL ACCESSORIES ATTACHED TO EXISTING WALLS, SUCH AS BUT NOT LIMITED TO: WALL PROTECTION/CHAIR RAILS, GRAB BARS, AND ALL ACCESSORIES, ETC.
7. REMOVE EXISTING GYPSUM WALL BOARD PARTITIONS, FRAMING AND DOOR FRAMES.
8. NOT USED.
9. REMOVE EXISTING CERAMIC TILE FLOOR FINISH.
10. REMOVAL OF EXISTING VINYL ASBESTOS TILE (VAT). REFER TO ASBESTOS REMOVAL DRAWINGS.

ABANDONED MECHANICAL DEMOLITION PLAN NOTES:

1. REMOVE ALL EXISTING PLUMBING FIXTURES AND PARTITIONS.
2. REMOVE EXHAUST FAN AND ASSOCIATED DUCTWORK AND ACCESSORIES AND CAP AT MAIN.
3. REMOVE VENT, WASTE AND ALL HOT AND COLD DOMESTIC WATER LINES BACK TO RISER IN CHASE/WALL AND CAP.
4. EXISTING UNIT HEATERS AND RADIATORS TO REMAIN FOR TEMPORARY HEAT.

ABANDONED ELECTRICAL DEMOLITION PLAN NOTES:

1. REMOVE ALL ABANDONED RACEWAYS, BOXES, SUPPORTS, ETC. WHERE EXPOSED (INCLUDING THOSE LOCATED ABOVE EXISTING SUSPENDED CEILINGS), AND WHERE THEY WILL INTERFERE WITH WORK OF FUTURE REHAB PROJECT. COORDINATE WITH THE DIRECTOR'S REPRESENTATIVE.
2. DISCONNECT AND REMOVE ALL EXISTING CONDUITS, CONDUCTORS, RECEPTACLES, ETC. AS REQUIRED BACK TO EXISTING SOURCE.
3. DISCONNECT AND REMOVE EXISTING SOUND SYSTEM DEVICE(S). CIRCUITING AND ALL SYSTEM COMPONENTS BACK TO EXISTING SOUND CONSOLE.
4. DISCONNECT AND REMOVE EXISTING LIGHT FIXTURE(S), SWITCHES AND CIRCUITRY BACK TO POWER PANEL.
5. DISCONNECT AND REMOVE TELEPHONE AND ALL WIRING CONDUIT ASSOCIATED BACK TO SOURCE.
6. DISCONNECT PANEL TO BE REMOVED. PANELBOARDS AND RISERS SERVING PANELBOARDS ARE TO REMAIN.

GENERAL NOTES - ELECTRICAL:

A. CONTRACTOR SHALL IDENTIFY AND MAINTAIN THE CIRCUITS TO REMAIN ACTIVE:
1. STAIRWAY LIGHTING
2. LIGHTING AND POWER IN ELEVATOR CORE AREA
3. LIGHTING AND POWER OUTSIDE WORK AREA

B. SOURCE FOR TEMPORARY LIGHT AND POWER IS FROM THE EXISTING "PANELS AND RISERS TO REMAIN PRR"

WINDOW NOTES:

FW – FURNISHED WINDOW (ALUMINUM SECURITY WINDOW FURNISHED BY OMH)

MATERIAL	QUANTITY
ACOUSTIC CEILING TILES	875SF
PLASTER CEILING	1,350SF
GYPSUM BOARD WALLS	960SF
CERAMIC TILE FLOOR	440SF

IMPORTANT NOTE: ALL QUANTITIES LISTED ON THE DRAWINGS ARE ESTIMATES AND ARE FOR INFORMATION ONLY. THE CONTRACTOR IS RESPONSIBLE FOR REMOVING ALL MATERIALS SHOWN ON THE DRAWINGS TO BE REMOVED, WHETHER THEY ARE GREATER OR LESS THAN THE QUANTITIES LISTED ON THIS SCHEDULE OR ANYWHERE ELSE ON THE DRAWINGS OR IN THE SPECIFICATIONS. NOT ALL THE MATERIALS TO BE REMOVED ARE NOTED HERE. REFER TO THE PLANS AND THE PLAN NOTES FOR ALL THE MATERIALS THAT SHALL BE REMOVED. REFER ALSO TO NOTE GN-1 ON THIS DRAWING. REFER TO 'LEGEND KEY' ON DRAWING NUMBER A-002. REFER TO DRAWING NUMBER A-104 FOR: HVAC, PLUMBING AND ELECTRIC MATERIALS QUANTITIES.

REFERENCE DRAWING

OGS
NYS OFFICE OF GENERAL SERVICES
Serving New York
ANDREW M. CUOMO, Governor
ROANN M. DESTITO, Commissioner
JAMES M. DAVIES, A.I.A., Deputy Commissioner, Design and Construction

CONSULTANT

KEY PLAN
A-SIDE — B-SIDE (NIC)
TRUE NORTH — PROJECT NORTH

WARNING:
THE ALTERATION OF THIS MATERIAL IN ANY WAY, UNLESS DONE UNDER THE DIRECTION OF A COMPARABLE PROFESSIONAL, I.E. ARCHITECT FOR AN ARCHITECT, ENGINEER FOR AN ENGINEER OR LANDSCAPE ARCHITECT FOR A LANDSCAPE ARCHITECT, IS A VIOLATION OF THE NEW YORK STATE EDUCATION LAW AND/OR REGULATIONS AND IS A CLASS 'A' MISDEMEANOR.

REGISTERED ARCHITECT — DAVID W. MILLER — 026832 — STATE OF NEW YORK

CONTRACT: CONSTRUCTION

TITLE: ASBESTOS REMOVAL, DEMOLITION, AND REPLACE WINDOWS DUNLAP BUILDING NO. 102, A-SIDE

LOCATION: MANHATTAN PSYCHIATRIC CENTER, 600 E. 125th STREET, WARDS ISLAND, NY 10035

CLIENT: OFFICE OF MENTAL HEALTH

"REVISED DRAWING 12/26/2012"

MARK	DATE	DESCRIPTION
FINAL	10/3/2012	BID DOCUMENT

PROJECT NUMBER:	Q0763 – C
DESIGNED BY:	DWM
DRAWN BY:	SL
FIELD CHECK:	OGS
APPROVED:	DWM

SHEET TITLE: EIGTH FLOOR DEMOLITION AND WINDOW INSTALLATION PLAN

DRAWING NUMBER: A-109

SHEET 35 OF 56

Jan 02,2013 – 10:06am
V:\DesignAndConstr\pQ07xx\q0763\CadArch\A-109_Q0763_Rev-Add4.dwg
36x24 PLOT SHEET

MISCELLANEOUS SYMBOLS/NOTES:

- AC — AIR CONDITIONING UNIT AT WINDOW, EXISTING – REMOVE AND TURN OVER TO OMH.
- SP — SPRINKLERS, EXISTING AT ROOMS DENOTED THUS – REMOVE, REFER TO NOTE G8 ON DRAWING NUMBER A–002.
- BUO — BOARDED UP OPENING AT EXISTING WINDOW EXTERIOR – REMOVE.
- FAN — FAN, EXISTING, MOUNTED IN WINDOW – REMOVE.
- SS — SECURITY SCREEN, EXISTING STEEL SS AT INTERIOR OF EXISTING WINDOW OPENING – REMOVE.
- 2x4 — INSECT SCREEN WITH 2x4 WOOD FRAME, EXISTING – REMOVE.
- PBO — PLYWOOD BOX OUT – REMOVE.
- SD — SMOKE DETECTOR– RELOCATE, UNLESS OTHERWISE DIRECTED. REFER TO DETAIL 6/A–503 AND NOTE G8 ON DRAWING A–002
- SL — SPEAKER/STROBE LIGHT– RELOCATE, UNLESS OTHERWISE DIRECTED. REFER TO DETAIL 6/A–503 AND NOTE G8 ON DRAWING A–002
- PS — PULL STATION– RELOCATE, UNLESS OTHERWISE DIRECTED. REFER TO DETAIL 6/A–503 AND NOTE G8 ON DRAWING A–002
- PRR — PANELS AND RISERS TO REMAIN
- FHSV — EXISTING FIRE HOSE STANDPIPE & VALVE TO REMAIN FOR TEMPORARY STANDPIPE
- CSL — CAP EXISTING SPRINKLER LINE
- NSV — NO SPRINKLER VALVE THIS LOCATION
- RPW — AT ALL EXISTING WINDOW OPENINGS TO RECEIVE WINDOW REPLACEMENT– BASEMENT FLOOR AND FIRST (1ST) FLOOR THROUGH SIXTEENTH (16TH) FLOORS, INCLUSIVE: REMOVE EXISTING INTERIOR WYTHE OF EXISTING EXTERIOR WALL ASSEMBLY WHICH CONSISTS OF 3"± THICK CMU WITH PLASTER FINISH (4"± TOTAL THICKNESS). REMOVE ALL THIS EXISTING INTERIOR WYTHE ASSEMBLY (INCLUDING ALL EXISTING BASE MATERIAL WHERE APPLICABLE) FROM EXISTING WINDOW JAMB TO EXISTING WINDOW JAMB, FROM TOP OF EXISTING FINISH FLOOR TO TOP OF EXISTING WINDOW STOOL, REMOVE ALL OF THE EXISTING STEEL SECURITY RADIATOR COVER ASSEMBLIES IN THEIR ENTIRETIES. REMOVE ALL EXISTING WINDOW STOOLS. AT ALL EXISTING WINDOW JAMB RETURNS: REMOVE THOSE PORTIONS OF THE EXISTING INTERIOR WYTHE OF EXISTING EXTERIOR WALL ASSEMBLY CONSISTING OF CMU'S AND PLASTER (SEE ABOVE) THAT NEED TO BE REMOVED TO INSTALL THE WINDOW CLIPS. SEE ALSO DRAWING NUMBERS: A–501, A–502, A–510, A–511, A–512, A–513, A–514 AND A–515 FOR DETAILED INFORMATION.

GENERAL NOTES:

GN–1 FIRST FLOOR THROUGH TENTH FLOORS ARE GUT DEMOLITION – FOR THE FULL WORK AREA INDICATED AND FOR THE FULL HEIGHT, FLOOR TO FLOOR PER EACH FLOOR – UNLESS OTHERWISE SHOWN OR INDICATED. CONSTRUCTION DEMOLITION PLAN NOTE INDICATORS ((#)) ARE SHOWN ON FLOOR PLANS AS THEY ARE MORE SPECIFIC PER ROOM/AREA. YET, WHERE APPLICABLE, ALL THESE CONSTRUCTION DEMOLITION REMOVALS APPLY TO ALL THE INDICATED WORK AREAS THROUGHOUT THE FIRST THROUGH TENTH FLOORS. ALL THE REMOVALS IN THESE AREAS ARE CLEARLY CALLED OUT TO BE GUT DEMOLITION, THEREFORE THE CONTRACTOR SHALL PROVIDE ALL THESE REMOVALS AT NO ADDITIONAL COST TO THE STATE. ALL ABANDONED MECHANICAL DEMOLITION PLAN NOTES AND ALL ELECTRICAL DEMOLITION PLAN NOTES APPLY THROUGHOUT THE AREAS OF WORK THROUGHOUT THE FIRST FLOOR THROUGH TENTH FLOORS. ALL THESE ABANDONED MECHANICAL DEMOLITION ITEMS AND ALL THESE ABANDONED ELECTRICAL DEMOLITION ITEMS SHALL BE REMOVED IN THEIR ENTIRETIES AT THE FIRST FLOOR THROUGH TENTH FLOORS – FOR THE FULL WORK AREA INDICATED AND FOR THE FULL HEIGHT, FLOOR TO FLOOR PER EACH FLOOR – UNLESS OTHERWISE SHOWN OR INDICATED – AT NO ADDITIONAL COST TO THE STATE. THIS WORK INCLUDES ALL EXISTING FLOORS, WALLS, CEILINGS, DOORS, ETC, ASSOCIATED WITH THE EXISTING PLUMBING, ELECTRICAL AND MECHANICAL CHASES AND/OR EXISTING PLUMBING, ELECTRICAL AND MECHANICAL ROOMS.

GN–2 REFER TO GENERAL NOTE A ON DRAWING Nos. H–101 THRU H–117 FOR PIPING INSULATION REQUIREMENTS AT ALL UN–INSULATED EXISTING DOMESTIC HOT AND COLD PIPE AND FITTINGS.

GN–3 REFER TO GENERAL NOTE B ON DRAWING Nos. H–101 THRU H–117 FOR PIPING INSULATION REQUIREMENTS AT ALL UN–INSULATED EXISTING HEATING (STEAM AND CONDENSATE) PIPING.

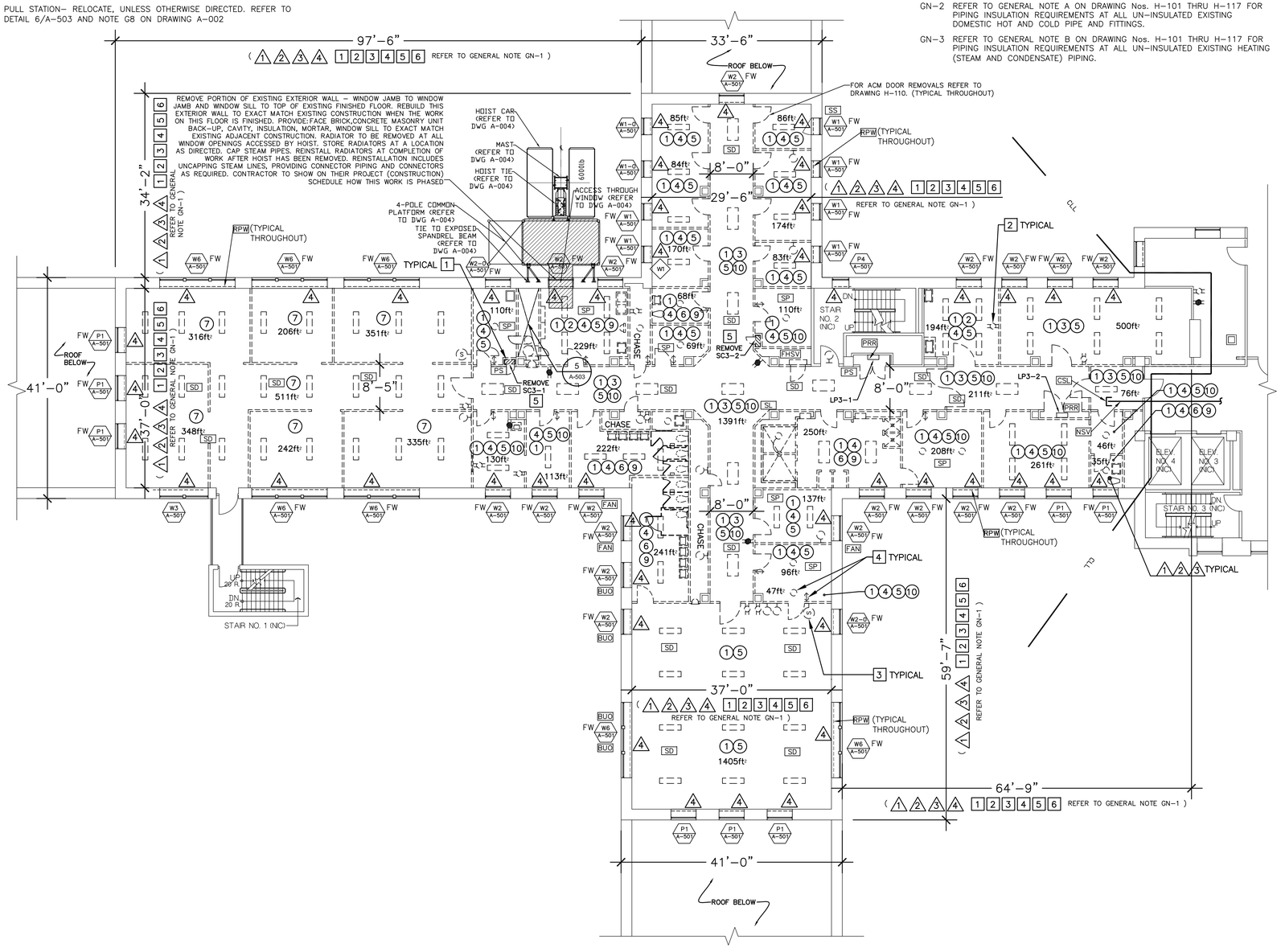

NINTH FLOOR DEMOLITION AND WINDOW INSTALLATION PLAN

3/32" = 1'-0"

REFERENCE DRAWING

CONSTRUCTION DEMOLITION PLAN NOTES:

1. REMOVE EXISTING STEEL DOORS, STEEL FRAMES AND RELATED HARDWARE. (COORDINATE DOOR REMOVAL WITH ASBESTOS ABATEMENT WORK)
2. REMOVE EXISTING FIXED FURNITURE AND FIXED ACCESSORIES (CLOSETS, SHELVING, CASEWORK, COUNTERTOPS, WALL MOUNTED CABINETS, MIRRORS, DISPENSERS, BULLETIN BOARDS, MARBLE TOILET PARTITIONS, MARBLE SCREEN–WALLS/PARTITIONS, ETC.). TYPICAL THROUGHOUT ALL SPACES AT DEMOLITION WORK, WHETHER CALLED FOR OR NOT.
3. REMOVE EXISTING ACOUSTIC CEILING TILES, GRID SYSTEM AND SUPPORTS.
4. REMOVE EXISTING PLASTER CEILING, LATHE, BLACK IRON AND SUPPORTS.
5. REMOVE EXISTING CMU PARTITION WITH PLASTER WALL FINISH, STEEL DOOR(S), STEEL FRAME(S) AND HARDWARE, ETC. PATCH FLOOR SLAB TO REMAIN. REMOVE ALL ACCESSORIES ATTACHED TO EXISTING WALLS, SUCH AS BUT NOT LIMITED TO: WALL PROTECTION/CHAIR RAILS, GRAB BARS, ANY AND ALL ACCESSORIES, ETC.
6. REMOVE EXISTING CMU PARTITION WITH CERAMIC TILE WALL FINISH AND/OR PLASTER WALL FINISH, STEEL DOOR(S) & FRAME(S) AND HARDWARE, ETC. PATCH FLOOR SLAB TO REMAIN. REMOVE ALL ACCESSORIES ATTACHED TO EXISTING WALLS, SUCH AS BUT NOT LIMITED TO: WALL PROTECTION/CHAIR RAILS, GRAB BARS, AND ALL ACCESSORIES, ETC.
7. REMOVE EXISTING GYPSUM WALL BOARD PARTITIONS, FRAMING AND DOOR FRAMES.
8. NOT USED.
9. REMOVE EXISTING CERAMIC TILE FLOOR FINISH.
10. REMOVAL OF EXISTING VINYL ASBESTOS TILE (VAT). REFER TO ASBESTOS REMOVAL DRAWINGS.

ABANDONED MECHANICAL DEMOLITION PLAN NOTES:

1. REMOVE ALL EXISTING PLUMBING FIXTURES AND PARTITIONS.
2. REMOVE EXHAUST FAN AND ASSOCIATED DUCTWORK AND ACCESSORIES AND CAP AT MAIN.
3. REMOVE VENT, WASTE AND ALL HOT AND COLD DOMESTIC WATER LINES BACK TO RISER IN CHASE/WALL AND CAP.
4. EXISTING UNIT HEATERS AND RADIATORS TO REMAIN FOR TEMPORARY HEAT.

ABANDONED ELECTRICAL DEMOLITION PLAN NOTES:

1. REMOVE ALL ABANDONED RACEWAYS, BOXES, SUPPORTS, ETC. WHERE EXPOSED (INCLUDING THOSE LOCATED ABOVE EXISTING SUSPENDED CEILINGS), AND WHERE THEY WILL INTERFERE WITH WORK OF FUTURE REHAB PROJECT. COORDINATE WITH THE DIRECTOR'S REPRESENTATIVE.
2. DISCONNECT AND REMOVE ALL EXISTING CONDUITS, CONDUCTORS, RECEPTACLES, ETC. AS REQUIRED BACK TO EXISTING SOURCE.
3. DISCONNECT AND REMOVE EXISTING SOUND SYSTEM DEVICE(S). CIRCUITING AND ALL SYSTEM COMPONENTS BACK TO EXISTING SOUND CONSOLE.
4. DISCONNECT AND REMOVE EXISTING LIGHT FIXTURE(S), SWITCHES AND CIRCUITRY BACK TO POWER PANEL.
5. DISCONNECT AND REMOVE TELEPHONE AND ALL WIRING CONDUIT ASSOCIATED BACK TO SOURCE.
6. DISCONNECT PANEL TO BE REMOVED. PANELBOARDS AND RISERS SERVING PANELBOARDS ARE TO REMAIN.

GENERAL NOTES - ELECTRICAL:

A. CONTRACTOR SHALL IDENTIFY AND MAINTAIN THE CIRCUITS TO REMAIN ACTIVE:
1. STAIRWAY LIGHTING
2. LIGHTING AND POWER IN ELEVATOR CORE AREA
3. LIGHTING AND POWER OUTSIDE WORK AREA

B. SOURCE FOR TEMPORARY LIGHT AND POWER IS FROM THE EXISTING "PANELS AND RISERS TO REMAIN PRR"

WINDOW NOTES:

FW – FURNISHED WINDOW (ALUMINUM SECURITY WINDOW FURNISHED BY OMH)

MATERIAL	QUANTITY
ACOUSTIC CEILING TILES	875SF
PLASTER CEILING	1,350SF
GYPSUM BOARD WALLS	960SF
CERAMIC TILE FLOOR	440SF

IMPORTANT NOTE: ALL QUANTITIES LISTED ON THE DRAWINGS ARE ESTIMATES AND ARE FOR INFORMATION ONLY. THE CONTRACTOR IS RESPONSIBLE FOR REMOVING ALL MATERIALS SHOWN ON THE DRAWINGS TO BE REMOVED, WHETHER THEY ARE GREATER OR LESS THAN THE QUANTITIES LISTED ON THIS SCHEDULE OR ANYWHERE ELSE ON THE DRAWINGS OR IN THE SPECIFICATIONS. NOT ALL THE MATERIALS TO BE REMOVED ARE NOTED HERE. REFER TO THE PLANS AND THE PLAN NOTES FOR ALL THE MATERIALS THAT SHALL BE REMOVED. REFER ALSO TO NOTE GN–1 ON THIS DRAWING. REFER TO 'LEGEND KEY' ON DRAWING NUMBER A–002. REFER TO DRAWING NUMBER A–104 FOR: HVAC, PLUMBING AND ELECTRIC MATERIALS QUANTITIES.

NYS OFFICE OF GENERAL SERVICES
Serving New York
ANDREW M. CUOMO
Governor
ROANN M. DESTITO
Commissioner
JAMES M. DAVIES, A.I.A.
Deputy Commissioner, Design and Construction

CONSULTANT

KEY PLAN

A–SIDE B–SIDE (NIC)

TRUE NORTH

PROJECT NORTH

WARNING:

THE ALTERATION OF THIS MATERIAL IN ANY WAY, UNLESS DONE UNDER THE DIRECTION OF A COMPARABLE PROFESSIONAL, I.E. ARCHITECT FOR AN ARCHITECT, ENGINEER FOR AN ENGINEER OR LANDSCAPE ARCHITECT FOR A LANDSCAPE ARCHITECT, IS A VIOLATION OF THE NEW YORK STATE EDUCATION LAW AND/OR REGULATIONS AND IS A CLASS 'A' MISDEMEANOR.

REGISTERED ARCHITECT DAVID W. MILLER 026863 STATE OF NEW YORK

CONTRACT:
CONSTRUCTION

TITLE:
ASBESTOS REMOVAL, DEMOLITION, AND REPLACE WINDOWS
DUNLAP BUILDING NO. 102, A–SIDE

LOCATION:
MANHATTAN PSYCHIATRIC CENTER
600 E. 125th STREET
WARDS ISLAND, NY 10035

CLIENT:
OFFICE OF MENTAL HEALTH

"REVISED DRAWING 12/26/2012"

MARK	DATE	DESCRIPTION
FINAL	10/3/2012	BID DOCUMENT

PROJECT NUMBER:	Q0763 – C
DESIGNED BY:	DWM
DRAWN BY:	SL
FIELD CHECK:	OGS
APPROVED:	DWM

SHEET TITLE:
NINTH FLOOR DEMOLITION AND WINDOW INSTALLATION PLAN

DRAWING NUMBER:
A–110

SHEET 36 OF 56

Jan 02,2013 – 10:10am
V:\Designed\Const\p007xx\q0763\CadArch\A–110_00763_Rev–Add4.dwg
36x24 PLOT SHEET

MISCELLANEOUS SYMBOLS/NOTES:

- AC — AIR CONDITIONING UNIT AT WINDOW, EXISTING – REMOVE AND TURN OVER TO OMH.
- SP — SPRINKLERS, EXISTING AT ROOMS DENOTED THUS – REMOVE, REFER TO NOTE G8 ON DRAWING NUMBER A–002.
- BUO — BOARDED UP OPENING AT EXISTING WINDOW EXTERIOR – REMOVE.
- FAN — FAN, EXISTING, MOUNTED IN WINDOW – REMOVE.
- SS — SECURITY SCREEN, EXISTING STEEL SS AT INTERIOR OF EXISTING WINDOW OPENING – REMOVE.
- 2x4 — INSECT SCREEN WITH 2x4 WOOD FRAME, EXISTING – REMOVE.
- PBO — PLYWOOD BOX OUT – REMOVE.
- SD — SMOKE DETECTOR– RELOCATE, UNLESS OTHERWISE DIRECTED. REFER TO DETAIL 6/A–503 AND NOTE G8 ON DRAWING A–002
- SL — SPEAKER/STROBE LIGHT– RELOCATE, UNLESS OTHERWISE DIRECTED. REFER TO DETAIL 6/A–503 AND NOTE G8 ON DRAWING A–002
- PS — PULL STATION– RELOCATE, UNLESS OTHERWISE DIRECTED. REFER TO DETAIL 6/A–503 AND NOTE G8 ON DRAWING A–002
- PRR — PANELS AND RISERS TO REMAIN
- FHSV — EXISTING FIRE HOSE STANDPIPE & VALVE TO REMAIN FOR TEMPORARY STANDPIPE
- CSL — CAP EXISTING SPRINKLER LINE
- NSV — NO SPRINKLER VALVE THIS LOCATION
- RPW — AT ALL EXISTING WINDOW OPENINGS TO RECEIVE WINDOW REPLACEMENT– BASEMENT FLOOR AND FIRST (1ST) FLOOR THROUGH SIXTEENTH (16TH) FLOORS, INCLUSIVE: REMOVE EXISTING INTERIOR WYTHE OF EXISTING EXTERIOR WALL ASSEMBLY WHICH CONSISTS OF 3"± THICK CMU WITH PLASTER FINISH (4"± TOTAL THICKNESS). REMOVE ALL THIS EXISTING INTERIOR WYTHE ASSEMBLY (INCLUDING ALL EXISTING BASE MATERIAL WHERE APPLICABLE) FROM EXISTING WINDOW JAMB TO EXISTING WINDOW JAMB, FROM TOP OF EXISTING FINISH FLOOR TO TOP OF EXISTING WINDOW STOOL, REMOVE ALL OF THE EXISTING STEEL SECURITY RADIATOR COVER ASSEMBLIES IN THEIR ENTIRETIES. REMOVE ALL EXISTING WINDOW STOOLS. AT ALL EXISTING WINDOW JAMB RETURNS: REMOVE THOSE PORTIONS OF THE EXISTING INTERIOR WYTHE OF EXISTING EXTERIOR WALL ASSEMBLY CONSISTING OF CMU'S AND PLASTER (SEE ABOVE) THAT NEED TO BE REMOVED TO INSTALL THE WINDOW CLIPS. SEE ALSO DRAWING NUMBERS: A–501, A–502, A–510, A–511, A–512, A–513, A–514 AND A–515 FOR DETAILED INFORMATION.

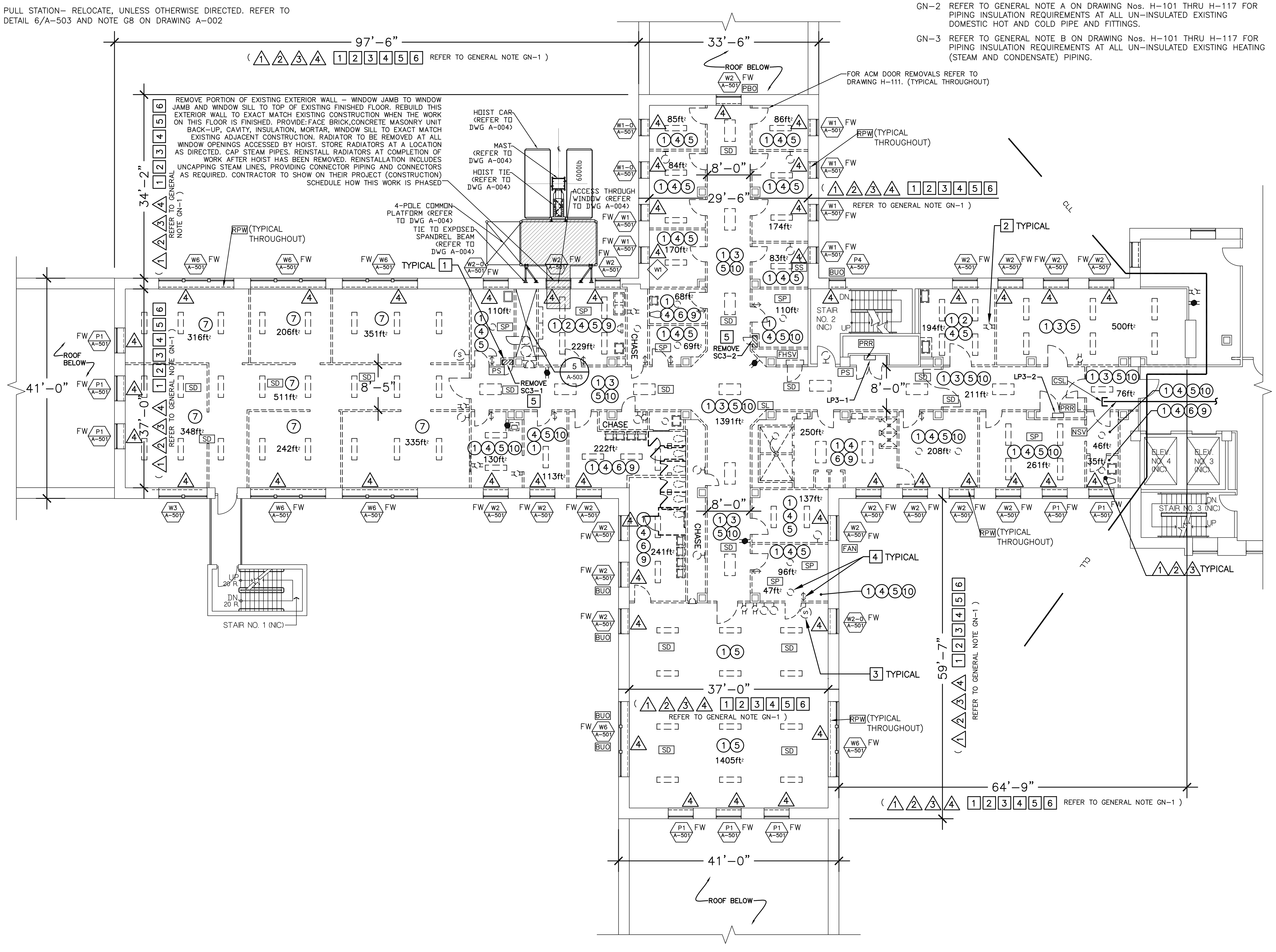

TENTH FLOOR DEMOLITION AND WINDOW INSTALLATION PLAN

3/32" = 1'-0"

REFERENCE DRAWING

GENERAL NOTES:

GN–1 FIRST FLOOR THROUGH TENTH FLOORS ARE GUT DEMOLITION – FOR THE FULL WORK AREA INDICATED AND FOR THE FULL HEIGHT, FLOOR TO FLOOR PER EACH FLOOR – UNLESS OTHERWISE SHOWN OR INDICATED. CONSTRUCTION DEMOLITION PLAN NOTE INDICATORS (#) ARE SHOWN ON FLOOR PLANS AS THEY ARE MORE SPECIFIC PER ROOM/AREA. YET, WHERE APPLICABLE, ALL THESE CONSTRUCTION DEMOLITION REMOVALS APPLY TO ALL THE INDICATED WORK AREAS THROUGHOUT THE FIRST THROUGH TENTH FLOORS. ALL THE REMOVALS IN THESE AREAS ARE CLEARLY CALLED OUT TO BE GUT DEMOLITION, THEREFORE THE CONTRACTOR SHALL PROVIDE ALL THESE REMOVALS AT NO ADDITIONAL COST TO THE STATE. ALL ABANDONED MECHANICAL DEMOLITION PLAN NOTES AND ALL ELECTRICAL DEMOLITION PLAN NOTES APPLY THROUGHOUT THE AREAS OF WORK THROUGHOUT THE FIRST FLOOR THROUGH TENTH FLOORS. ALL THESE ABANDONED MECHANICAL DEMOLITION ITEMS AND ALL THESE ABANDONED ELECTRICAL DEMOLITION ITEMS SHALL BE REMOVED IN THEIR ENTIRETIES AT THE FIRST FLOOR THROUGH TENTH FLOORS – FOR THE FULL WORK AREA INDICATED AND FOR THE FULL HEIGHT, FLOOR TO FLOOR PER EACH FLOOR – UNLESS OTHERWISE SHOWN OR INDICATED – AT NO ADDITIONAL COST TO THE STATE. THIS WORK INCLUDES ALL EXISTING FLOORS, WALLS, CEILINGS, DOORS, ETC, ASSOCIATED WITH THE EXISTING PLUMBING, ELECTRICAL AND MECHANICAL CHASES AND/OR EXISTING PLUMBING, ELECTRICAL AND MECHANICAL ROOMS.

GN–2 REFER TO GENERAL NOTE A ON DRAWING Nos. H–101 THRU H–117 FOR PIPING INSULATION REQUIREMENTS AT ALL UN–INSULATED EXISTING DOMESTIC HOT AND COLD PIPE AND FITTINGS.

GN–3 REFER TO GENERAL NOTE B ON DRAWING Nos. H–101 THRU H–117 FOR PIPING INSULATION REQUIREMENTS AT ALL UN–INSULATED EXISTING HEATING (STEAM AND CONDENSATE) PIPING.

CONSTRUCTION DEMOLITION PLAN NOTES:

1. REMOVE EXISTING STEEL DOORS, STEEL FRAMES AND RELATED HARDWARE. (COORDINATE DOOR REMOVAL WITH ASBESTOS ABATEMENT WORK)
2. REMOVE EXISTING FIXED FURNITURE AND FIXED ACCESSORIES (CLOSETS, SHELVING, CASEWORK, COUNTERTOPS, WALL MOUNTED CABINETS, MIRRORS, DISPENSERS, BULLETIN BOARDS, MARBLE TOILET PARTITIONS, MARBLE SCREEN–WALLS/PARTITIONS, ETC.). TYPICAL THROUGHOUT ALL SPACES AT DEMOLITION WORK, WHETHER CALLED FOR OR NOT.
3. REMOVE EXISTING ACOUSTIC CEILING TILES, GRID SYSTEM AND SUPPORTS.
4. REMOVE EXISTING PLASTER CEILING, LATHE, BLACK IRON AND SUPPORTS.
5. REMOVE EXISTING CMU PARTITION WITH PLASTER WALL FINISH, STEEL DOOR(S), STEEL FRAME(S) AND HARDWARE, ETC. PATCH FLOOR SLAB TO REMAIN. REMOVE ALL ACCESSORIES ATTACHED TO EXISTING WALLS, SUCH AS BUT NOT LIMITED TO: WALL PROTECTION/CHAIR RAILS, GRAB BARS, ANY AND ALL ACCESSORIES, ETC.
6. REMOVE EXISTING CMU PARTITION WITH CERAMIC TILE WALL FINISH AND/OR PLASTER WALL FINISH, STEEL DOOR(S) & FRAME(S) AND HARDWARE, ETC. PATCH FLOOR SLAB TO REMAIN. REMOVE ALL ACCESSORIES ATTACHED TO EXISTING WALLS, SUCH AS BUT NOT LIMITED TO: WALL PROTECTION/CHAIR RAILS, GRAB BARS, AND ALL ACCESSORIES, ETC.
7. REMOVE EXISTING GYPSUM WALL BOARD PARTITIONS, FRAMING AND DOOR FRAMES.
8. NOT USED.
9. REMOVE EXISTING CERAMIC TILE FLOOR FINISH.
10. REMOVAL OF EXISTING VINYL ASBESTOS TILE (VAT). REFER TO ASBESTOS REMOVAL DRAWINGS.

ABANDONED MECHANICAL DEMOLITION PLAN NOTES:

1. REMOVE ALL EXISTING PLUMBING FIXTURES AND PARTITIONS.
2. REMOVE EXHAUST FAN AND ASSOCIATED DUCTWORK AND ACCESSORIES AND CAP AT MAIN.
3. REMOVE VENT, WASTE AND ALL HOT AND COLD DOMESTIC WATER LINES BACK TO RISER IN CHASE/WALL AND CAP.
4. EXISTING UNIT HEATERS AND RADIATORS TO REMAIN FOR TEMPORARY HEAT.

ABANDONED ELECTRICAL DEMOLITION PLAN NOTES:

1. REMOVE ALL ABANDONED RACEWAYS, BOXES, SUPPORTS, ETC. WHERE EXPOSED (INCLUDING THOSE LOCATED ABOVE EXISTING SUSPENDED CEILINGS), AND WHERE THEY WILL INTERFERE WITH WORK OF FUTURE REHAB PROJECT. COORDINATE WITH THE DIRECTOR'S REPRESENTATIVE.
2. DISCONNECT AND REMOVE ALL EXISTING CONDUITS, CONDUCTORS, RECEPTACLES, ETC. AS REQUIRED BACK TO EXISTING SOURCE.
3. DISCONNECT AND REMOVE EXISTING SOUND SYSTEM DEVICE(S). CIRCUITING AND ALL SYSTEM COMPONENTS BACK TO EXISTING SOUND CONSOLE.
4. DISCONNECT AND REMOVE EXISTING LIGHT FIXTURE(S), SWITCHES AND CIRCUITRY BACK TO POWER PANEL.
5. DISCONNECT AND REMOVE TELEPHONE AND ALL WIRING CONDUIT ASSOCIATED BACK TO SOURCE.
6. DISCONNECT PANEL TO BE REMOVED. PANELBOARDS AND RISERS SERVING PANELBOARDS ARE TO REMAIN.

GENERAL NOTES - ELECTRICAL:

A. CONTRACTOR SHALL IDENTIFY AND MAINTAIN THE CIRCUITS TO REMAIN ACTIVE:
   1. STAIRWAY LIGHTING
   2. LIGHTING AND POWER IN ELEVATOR CORE AREA
   3. LIGHTING AND POWER OUTSIDE WORK AREA

B. SOURCE FOR TEMPORARY LIGHT AND POWER IS FROM THE EXISTING "PANELS AND RISERS TO REMAIN PRR"

WINDOW NOTES:

FW – FURNISHED WINDOW (ALUMINUM SECURITY WINDOW FURNISHED BY OMH)

MATERIAL	QUANTITY
ACOUSTIC CEILING TILES	875SF
PLASTER CEILING	1,350SF
GYPSUM BOARD WALLS	960SF
CERAMIC TILE FLOOR	440SF

IMPORTANT NOTE: ALL QUANTITIES LISTED ON THE DRAWINGS ARE ESTIMATES AND ARE FOR INFORMATION ONLY. THE CONTRACTOR IS RESPONSIBLE FOR REMOVING ALL MATERIALS SHOWN ON THE DRAWINGS TO BE REMOVED, WHETHER THEY ARE GREATER OR LESS THAN THE QUANTITIES LISTED ON THIS SCHEDULE OR ANYWHERE ELSE ON THE DRAWINGS OR IN THE SPECIFICATIONS. NOT ALL THE MATERIALS TO BE REMOVED ARE NOTED HERE. REFER TO THE PLANS AND THE PLAN NOTES FOR ALL THE MATERIALS THAT SHALL BE REMOVED. REFER ALSO TO NOTE GN–1 ON THIS DRAWING. REFER TO 'LEGEND KEY' ON DRAWING NUMBER A–002. REFER TO DRAWING NUMBER A–104 FOR: HVAC, PLUMBING AND ELECTRIC MATERIALS QUANTITIES.

NYS OFFICE OF GENERAL SERVICES
Serving New York
ANDREW M. CUOMO, Governor
ROANN M. DESTITO, Commissioner
JAMES M. DAVIES, A.I.A., Deputy Commissioner, Design and Construction

CONSULTANT

KEY PLAN

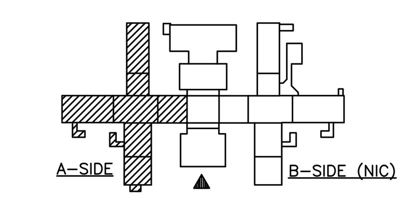

WARNING:
THE ALTERATION OF THIS MATERIAL IN ANY WAY, UNLESS DONE UNDER THE DIRECTION OF A COMPARABLE PROFESSIONAL, I.E. ARCHITECT FOR AN ARCHITECT, ENGINEER FOR AN ENGINEER OR LANDSCAPE ARCHITECT FOR A LANDSCAPE ARCHITECT, IS A VIOLATION OF THE NEW YORK STATE EDUCATION LAW AND/OR REGULATIONS AND IS A CLASS 'A' MISDEMEANOR.

REGISTERED ARCHITECT – DAVID W. MILLER – 026832 – STATE OF NEW YORK

CONTRACT: CONSTRUCTION

TITLE: ASBESTOS REMOVAL, DEMOLITION, AND REPLACE WINDOWS DUNLAP BUILDING NO. 102, A–SIDE

LOCATION: MANHATTAN PSYCHIATRIC CENTER, 600 E. 125th STREET, WARDS ISLAND, NY 10035

CLIENT: OFFICE OF MENTAL HEALTH

"REVISED DRAWING 12/26/2012"

MARK	DATE	DESCRIPTION
FINAL	10/3/2012	BID DOCUMENT

PROJECT NUMBER:	Q0763 – C
DESIGNED BY:	DWM
DRAWN BY:	SL
FIELD CHECK:	OGS
APPROVED:	DWM

SHEET TITLE: TENTH FLOOR DEMOLITION AND WINDOW INSTALLATION PLAN

DRAWING NUMBER: A–111

SHEET 37 OF 56

ABANDONED MECHANICAL DEMOLITION PLAN NOTES:

(4) EXISTING UNIT HEATERS AND RADIATORS TO REMAIN FOR TEMPORARY HEAT.

MISCELLANEOUS SYMBOLS/NOTES:

SP SPRINKLERS, EXISTING AT ROOMS DENOTED THUS – SHALL REMAIN UNDISTURBED.

BUO BOARDED UP OPENING AT EXISTING WINDOW EXTERIOR – REMOVE.

FAN FAN, EXISTING, MOUNTED IN WINDOW – REMOVE.

SS SECURITY SCREEN, EXISTING STEEL SS AT INTERIOR OF EXISTING WINDOW OPENING – REMOVE.

SSF SECURITY SCREEN FRAME ONLY, EXISTING – REMOVE. NO SECURITY SCREENS HERE.

RPW AT ALL EXISTING WINDOW OPENINGS TO RECEIVE WINDOW REPLACEMENT– BASEMENT FLOOR AND FIRST (1ST) FLOOR THROUGH SIXTEENTH (16TH) FLOORS, INCLUSIVE: REMOVE EXISTING INTERIOR WYTHE OF EXISTING EXTERIOR WALL ASSEMBLY WHICH CONSISTS OF 3"± THICK CMU WITH PLASTER FINISH (4"± TOTAL THICKNESS). REMOVE ALL THIS EXISTING INTERIOR WYTHE ASSEMBLY (INCLUDING ALL EXISTING BASE MATERIAL WHERE APPLICABLE) FROM EXISTING WINDOW JAMB TO EXISTING WINDOW JAMB, FROM TOP OF EXISTING FINISH FLOOR TO TOP OF EXISTING WINDOW STOOL, REMOVE ALL OF THE EXISTING STEEL SECURITY RADIATOR COVER ASSEMBLIES IN THEIR ENTIRETIES. REMOVE ALL EXISTING WINDOW STOOLS. AT ALL EXISTING WINDOW JAMB RETURNS: REMOVE THOSE PORTIONS OF THE EXISTING INTERIOR WYTHE OF EXISTING EXTERIOR WALL ASSEMBLY CONSISTING OF CMU'S AND PLASTER (SEE ABOVE) THAT NEED TO BE REMOVED TO INSTALL THE WINDOW CLIPS. SEE ALSO DRAWING NUMBERS: A–501, A–502, A–510, A–511, A–512, A–513, A–514 AND A–515 FOR DETAILED INFORMATION.

WINDOW NOTES:

FW – FURNISHED WINDOW (ALUMINUM SECURITY WINDOW FURNISHED BY OMH)

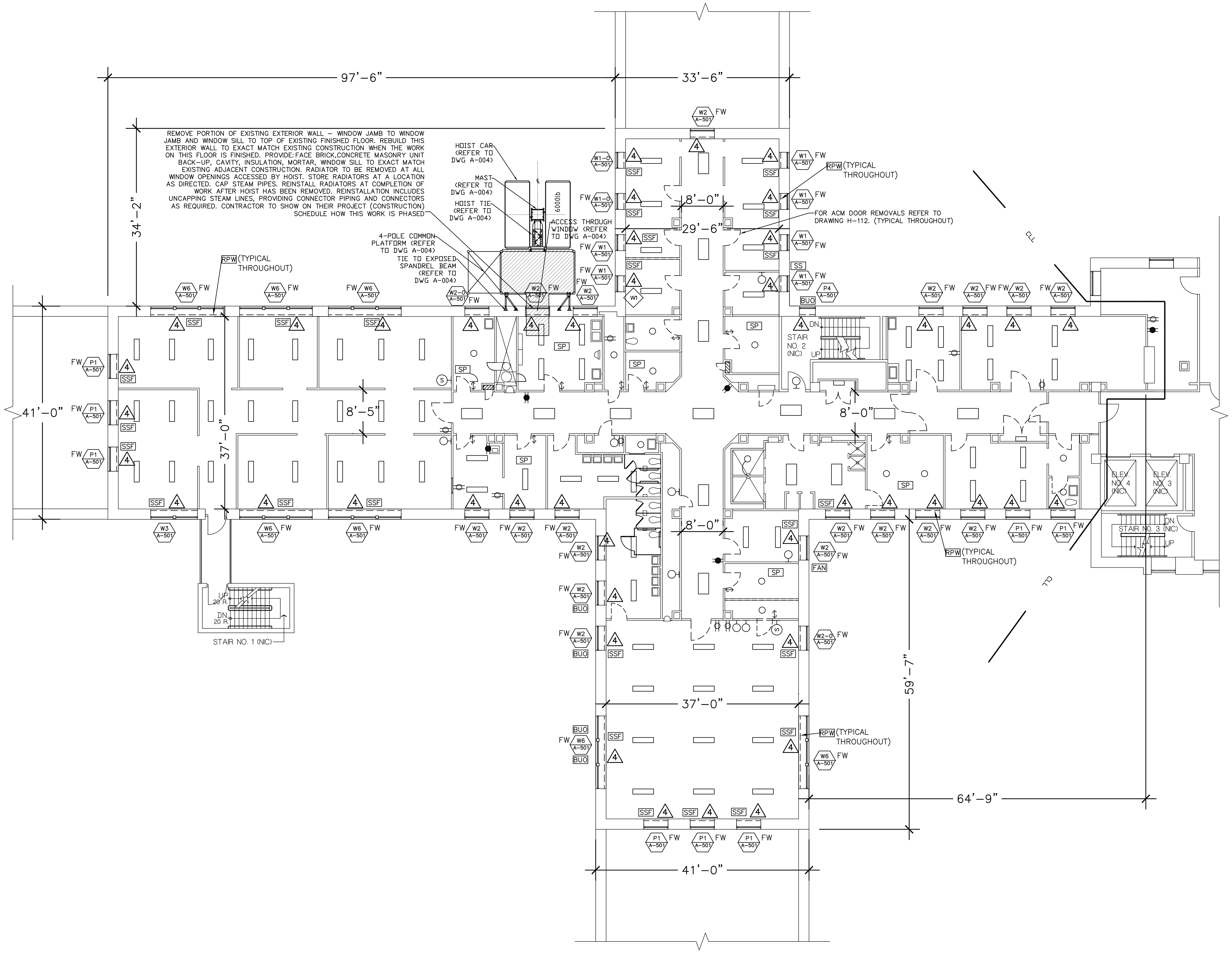

ELEVENTH FLOOR WINDOW INSTALLATION PLAN
3/32" = 1'-0"

REFERENCE DRAWING

NYS OFFICE OF GENERAL SERVICES
Serving New York
ANDREW M. CUOMO
Governor
ROANN M. DESTITO
Commissioner
JAMES M. DAVIES, A.I.A.
Deputy Commissioner, Design and Construction

CONSULTANT

KEY PLAN

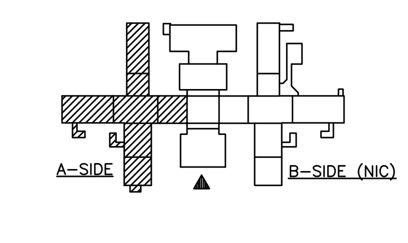

WARNING:
THE ALTERATION OF THIS MATERIAL IN ANY WAY, UNLESS DONE UNDER THE DIRECTION OF A COMPARABLE PROFESSIONAL, I.E. ARCHITECT FOR AN ARCHITECT, ENGINEER FOR AN ENGINEER OR LANDSCAPE ARCHITECT FOR A LANDSCAPE ARCHITECT, IS A VIOLATION OF THE NEW YORK STATE EDUCATION LAW AND/OR REGULATIONS AND IS A CLASS 'A' MISDEMEANOR.

REGISTERED ARCHITECT DAVID W. MILLER 026832 STATE OF NEW YORK

CONTRACT: CONSTRUCTION

TITLE: ASBESTOS REMOVAL, DEMOLITION, AND REPLACE WINDOWS DUNLAP BUILDING NO. 102, A–SIDE

LOCATION: MANHATTAN PSYCHIATRIC CENTER 600 E. 125th STREET WARDS ISLAND, NY 10035

CLIENT: OFFICE OF MENTAL HEALTH

"REVISED DRAWING 12/26/2012"

MARK	DATE	DESCRIPTION
FINAL	10/3/2012	BID DOCUMENT

PROJECT NUMBER:	Q0763 – C
DESIGNED BY:	DWM
DRAWN BY:	SL
FIELD CHECK:	OGS
APPROVED:	DWM

SHEET TITLE: ELEVENTH FLOOR DEMOLITION AND WINDOW INSTALLATION PLAN

DRAWING NUMBER: A–112

SHEET 38 OF 56

Jan 02,2013 – 12:04am
V:\DesignAndConstr\pQ07xx\q0763\CadArch\A–112_Q0763_Rev–Add4.dwg
36x24 PLOT SHEET

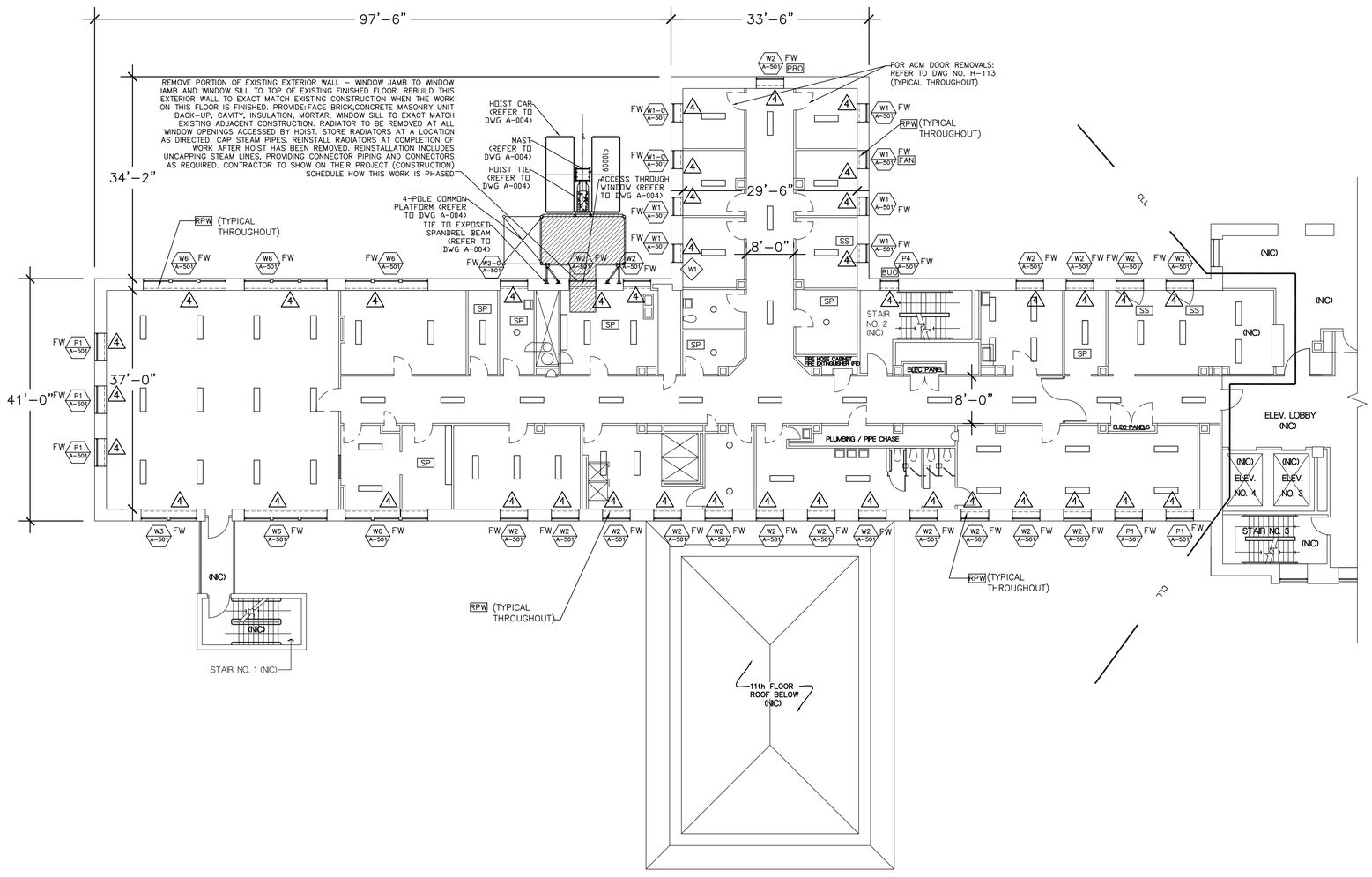

TWELFTH FLOOR WINDOW INSTALLATION PLAN
3/32" = 1'-0"

ABANDONED MECHANICAL DEMOLITION PLAN NOTES:

4. EXISTING UNIT HEATERS AND RADIATORS TO REMAIN FOR TEMPORARY HEAT.

MISCELLANEOUS SYMBOLS/NOTES:

SP SPRINKLERS, EXISTING AT ROOMS DENOTED THUS – SHALL REMAIN UNDISTURBED.

BUO BOARDED UP OPENING AT EXISTING WINDOW EXTERIOR – REMOVE.

FAN FAN, EXISTING, MOUNTED IN WINDOW – REMOVE.

SS SECURITY SCREEN, EXISTING STEEL SS AT INTERIOR OF EXISTING WINDOW OPENING – REMOVE.

PBO PLYWOOD BOX OUT – REMOVE.

RPW AT ALL EXISTING WINDOW OPENINGS TO RECEIVE WINDOW REPLACEMENT– BASEMENT FLOOR AND FIRST (1ST) FLOOR THROUGH SIXTEENTH (16TH) FLOORS, INCLUSIVE: REMOVE EXISTING INTERIOR WYTHE OF EXISTING EXTERIOR WALL ASSEMBLY WHICH CONSISTS OF 3"± THICK CMU WITH PLASTER FINISH (4"± TOTAL THICKNESS). REMOVE ALL THIS EXISTING INTERIOR WYTHE ASSEMBLY (INCLUDING ALL EXISTING BASE MATERIAL WHERE APPLICABLE) FROM EXISTING WINDOW JAMB TO EXISTING WINDOW JAMB, FROM TOP OF EXISTING FINISH FLOOR TO TOP OF EXISTING WINDOW STOOL, REMOVE ALL OF THE EXISTING STEEL SECURITY RADIATOR COVER ASSEMBLIES IN THEIR ENTIRETIES. REMOVE ALL EXISTING WINDOW STOOLS. AT ALL EXISTING WINDOW JAMB RETURNS: REMOVE THOSE PORTIONS OF THE EXISTING INTERIOR WYTHE OF EXISTING EXTERIOR WALL ASSEMBLY CONSISTING OF CMU'S AND PLASTER (SEE ABOVE) THAT NEED TO BE REMOVED TO INSTALL THE WINDOW CLIPS. SEE ALSO DRAWING NUMBERS: A–501, A–502, A–510, A–511, A–512, A–513, A–514 AND A–515 FOR DETAILED INFORMATION.

WINDOW NOTES:

FW – FURNISHED WINDOW (ALUMINUM SECURITY WINDOW FURNISHED BY OMH)

REFERENCE DRAWING

NYS OFFICE OF GENERAL SERVICES
Serving New York
ANDREW M. CUOMO
Governor
ROANN M. DESTITO
Commissioner
JAMES M. DAVIES, A.I.A.
Deputy Commissioner, Design and Construction

CONSULTANT

KEY PLAN
A–SIDE
B–SIDE (NIC)
TRUE NORTH
PROJECT NORTH

WARNING:
THE ALTERATION OF THIS MATERIAL IN ANY WAY, UNLESS DONE UNDER THE DIRECTION OF A COMPARABLE PROFESSIONAL, I.E. ARCHITECT FOR AN ARCHITECT, ENGINEER FOR AN ENGINEER OR LANDSCAPE ARCHITECT FOR A LANDSCAPE ARCHITECT, IS A VIOLATION OF THE NEW YORK STATE EDUCATION LAW AND/OR REGULATIONS AND IS A CLASS 'A' MISDEMEANOR.

REGISTERED ARCHITECT DAVID W. MILLER 026863 STATE OF NEW YORK

CONTRACT:
CONSTRUCTION

TITLE:
ASBESTOS REMOVAL, DEMOLITION, AND REPLACE WINDOWS
DUNLAP BUILDING NO. 102, A–SIDE

LOCATION:
MANHATTAN PSYCHIATRIC CENTER
600 E. 125th STREET
WARDS ISLAND, NY 10035

CLIENT:
OFFICE OF MENTAL HEALTH

"REVISED DRAWING 12/26/2012"

MARK	DATE	DESCRIPTION
FINAL	10/3/2012	BID DOCUMENT

PROJECT NUMBER:	Q0763 – C
DESIGNED BY:	DWM
DRAWN BY:	SL
FIELD CHECK:	OGS
APPROVED:	DWM

SHEET TITLE:
TWELFTH FLOOR DEMOLITION AND WINDOW INSTALLATION PLAN

DRAWING NUMBER:
A–113

SHEET 39 OF 56

Jan 02,2013 – 12:16am
V:\Design\AdConst\p201xx\Q0763\Cadarch\A-113_Q0763_Rev-Add4.dwg
36x24 PLOT SHEET

ABANDONED MECHANICAL DEMOLITION PLAN NOTES:

4 EXISTING UNIT HEATERS AND RADIATORS TO REMAIN FOR TEMPORARY HEAT.

MISCELLANEOUS SYMBOLS/NOTES:

SP SPRINKLERS, EXISTING AT ROOMS DENOTED THUS – SHALL REMAIN UNDISTURBED.

BUO BOARDED UP OPENING AT EXISTING WINDOW EXTERIOR – REMOVE.

FAN FAN, EXISTING, MOUNTED IN WINDOW – REMOVE.

SS SECURITY SCREEN, EXISTING STEEL SS AT INTERIOR OF EXISTING WINDOW OPENING – REMOVE.

SSF SECURITY SCREEN FRAME ONLY, EXISTING – REMOVE. NO SECURITY SCREENS HERE.

RPW AT ALL EXISTING WINDOW OPENINGS TO RECEIVE WINDOW REPLACEMENT– BASEMENT FLOOR AND FIRST (1ST) FLOOR THROUGH SIXTEENTH (16TH) FLOORS, INCLUSIVE: REMOVE EXISTING INTERIOR WYTHE OF EXISTING EXTERIOR WALL ASSEMBLY WHICH CONSISTS OF 3"± THICK CMU WITH PLASTER FINISH (4"± TOTAL THICKNESS). REMOVE ALL THIS EXISTING INTERIOR WYTHE ASSEMBLY (INCLUDING ALL EXISTING BASE MATERIAL WHERE APPLICABLE) FROM EXISTING WINDOW JAMB TO EXISTING WINDOW JAMB, FROM TOP OF EXISTING FINISH FLOOR TO TOP OF EXISTING WINDOW STOOL, REMOVE ALL OF THE EXISTING STEEL SECURITY RADIATOR COVER ASSEMBLIES IN THEIR ENTIRETIES. REMOVE ALL EXISTING WINDOW STOOLS. AT ALL EXISTING WINDOW JAMB RETURNS: REMOVE THOSE PORTIONS OF THE EXISTING INTERIOR WYTHE OF EXISTING EXTERIOR WALL ASSEMBLY CONSISTING OF CMU'S AND PLASTER (SEE ABOVE) THAT NEED TO BE REMOVED TO INSTALL THE WINDOW CLIPS. SEE ALSO DRAWING NUMBERS: A–501, A–502, A–510, A–511, A–512, A–513, A–514 AND A–515 FOR DETAILED INFORMATION.

WINDOW NOTES:

FW – FURNISHED WINDOW (ALUMINUM SECURITY WINDOW FURNISHED BY OMH)

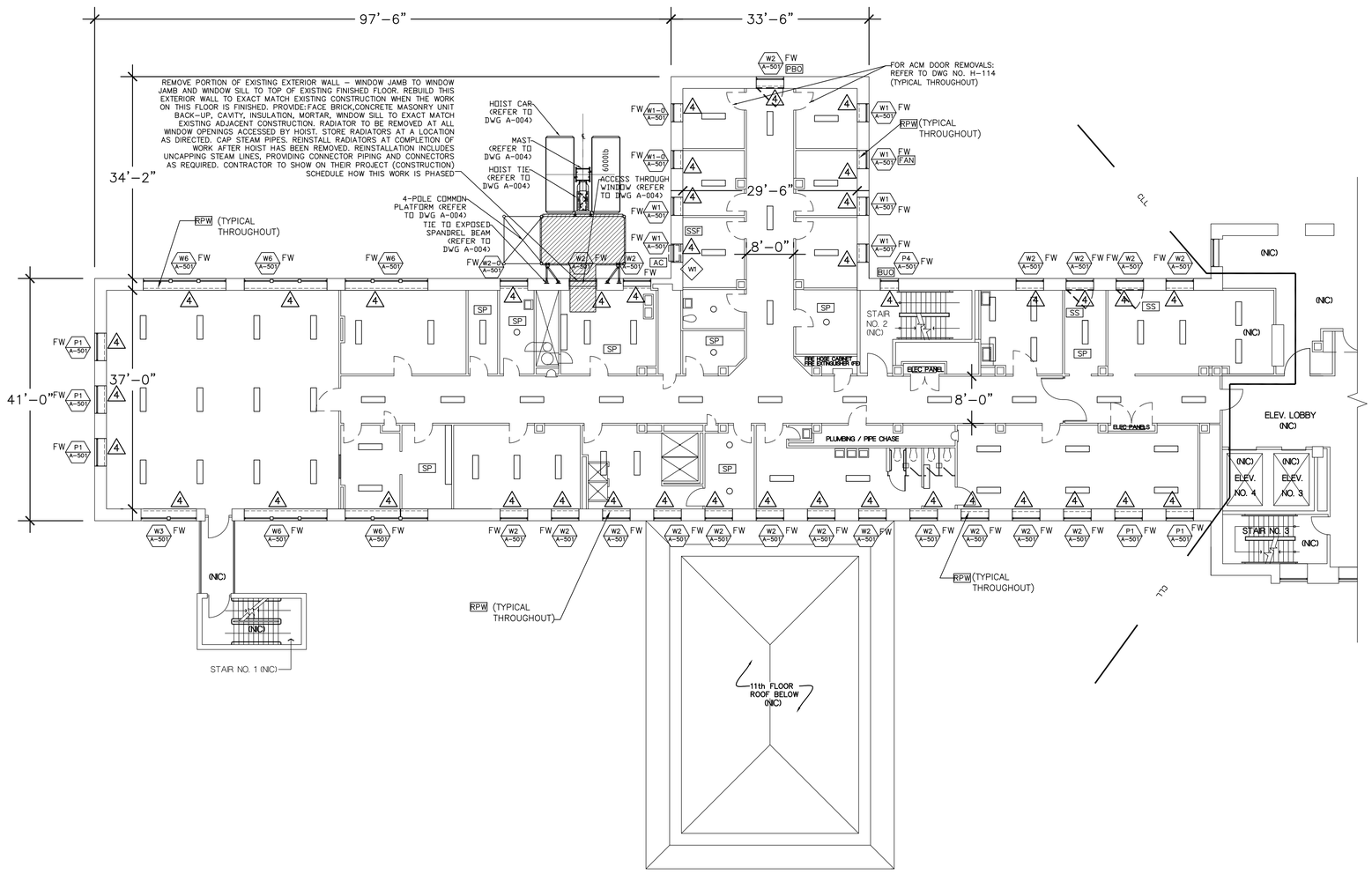

THIRTEENTH FLOOR WINDOW INSTALLATION PLAN
3/32" = 1'-0"

REFERENCE DRAWING

NYS OFFICE OF GENERAL SERVICES
Serving New York
ANDREW M. CUOMO
Governor
ROANN M. DESTITO
Commissioner
JAMES M. DAVIES, A.I.A.
Deputy Commissioner, Design and Construction

CONSULTANT

KEY PLAN
A–SIDE
B–SIDE (NIC)
TRUE NORTH
PROJECT NORTH

WARNING:
THE ALTERATION OF THIS MATERIAL IN ANY WAY, UNLESS DONE UNDER THE DIRECTION OF A COMPARABLE PROFESSIONAL, I.E. ARCHITECT FOR AN ARCHITECT, ENGINEER FOR AN ENGINEER OR LANDSCAPE ARCHITECT FOR A LANDSCAPE ARCHITECT, IS A VIOLATION OF THE NEW YORK STATE EDUCATION LAW AND/OR REGULATIONS AND IS A CLASS 'A' MISDEMEANOR.

REGISTERED ARCHITECT DAVID W. MILLER 026863 STATE OF NEW YORK

CONTRACT:
CONSTRUCTION

TITLE:
ASBESTOS REMOVAL, DEMOLITION, AND REPLACE WINDOWS
DUNLAP BUILDING NO. 102, A–SIDE

LOCATION:
MANHATTAN PSYCHIATRIC CENTER
600 E. 125th STREET
WARDS ISLAND, NY 10035

CLIENT:
OFFICE OF MENTAL HEALTH

"REVISED DRAWING 12/26/2012"

MARK	DATE	DESCRIPTION
FINAL	10/3/2012	BID DOCUMENT

PROJECT NUMBER:	Q0763 – C
DESIGNED BY:	DWM
DRAWN BY:	SL
FIELD CHECK:	OGS
APPROVED:	DWM

SHEET TITLE:
THIRTEENTH FLOOR DEMOLITION AND WINDOW INSTALLATION PLAN

DRAWING NUMBER:
A–114

SHEET 40 OF 56

Jan 02,2013 – 12:25pm
V:\Design4\dConst\p201xx\Q0763\Cadarch\A–114_Q0763_Rev–Add4.dwg
36x24 PLOT SHEET

ABANDONED MECHANICAL DEMOLITION PLAN NOTES:

4 EXISTING UNIT HEATERS AND RADIATORS TO REMAIN FOR TEMPORARY HEAT.

MISCELLANEOUS SYMBOLS/NOTES:

SP SPRINKLERS, EXISTING AT ROOMS DENOTED THUS – SHALL REMAIN UNDISTURBED.

BUO BOARDED UP OPENING AT EXISTING WINDOW EXTERIOR – REMOVE.

RPW AT ALL EXISTING WINDOW OPENINGS TO RECEIVE WINDOW REPLACEMENT– BASEMENT FLOOR AND FIRST (1ST) FLOOR THROUGH SIXTEENTH (16TH) FLOORS, INCLUSIVE: REMOVE EXISTING INTERIOR WYTHE OF EXISTING EXTERIOR WALL ASSEMBLY WHICH CONSISTS OF 3"± THICK CMU WITH PLASTER FINISH (4"± TOTAL THICKNESS). REMOVE ALL THIS EXISTING INTERIOR WYTHE ASSEMBLY (INCLUDING ALL EXISTING BASE MATERIAL WHERE APPLICABLE) FROM EXISTING WINDOW JAMB TO EXISTING WINDOW JAMB, FROM TOP OF EXISTING FINISH FLOOR TO TOP OF EXISTING WINDOW STOOL, REMOVE ALL OF THE EXISTING STEEL SECURITY RADIATOR COVER ASSEMBLIES IN THEIR ENTIRETIES. REMOVE ALL EXISTING WINDOW STOOLS. AT ALL EXISTING WINDOW JAMB RETURNS: REMOVE THOSE PORTIONS OF THE EXISTING INTERIOR WYTHE OF EXISTING EXTERIOR WALL ASSEMBLY CONSISTING OF CMU'S AND PLASTER (SEE ABOVE) THAT NEED TO BE REMOVED TO INSTALL THE WINDOW CLIPS. SEE ALSO DRAWING NUMBERS: A–501, A–502, A–510, A–511, A–512, A–513, A–514 AND A–515 FOR DETAILED INFORMATION.

WINDOW NOTES:

FW – FURNISHED WINDOW (ALUMINUM SECURITY WINDOW FURNISHED BY OMH)

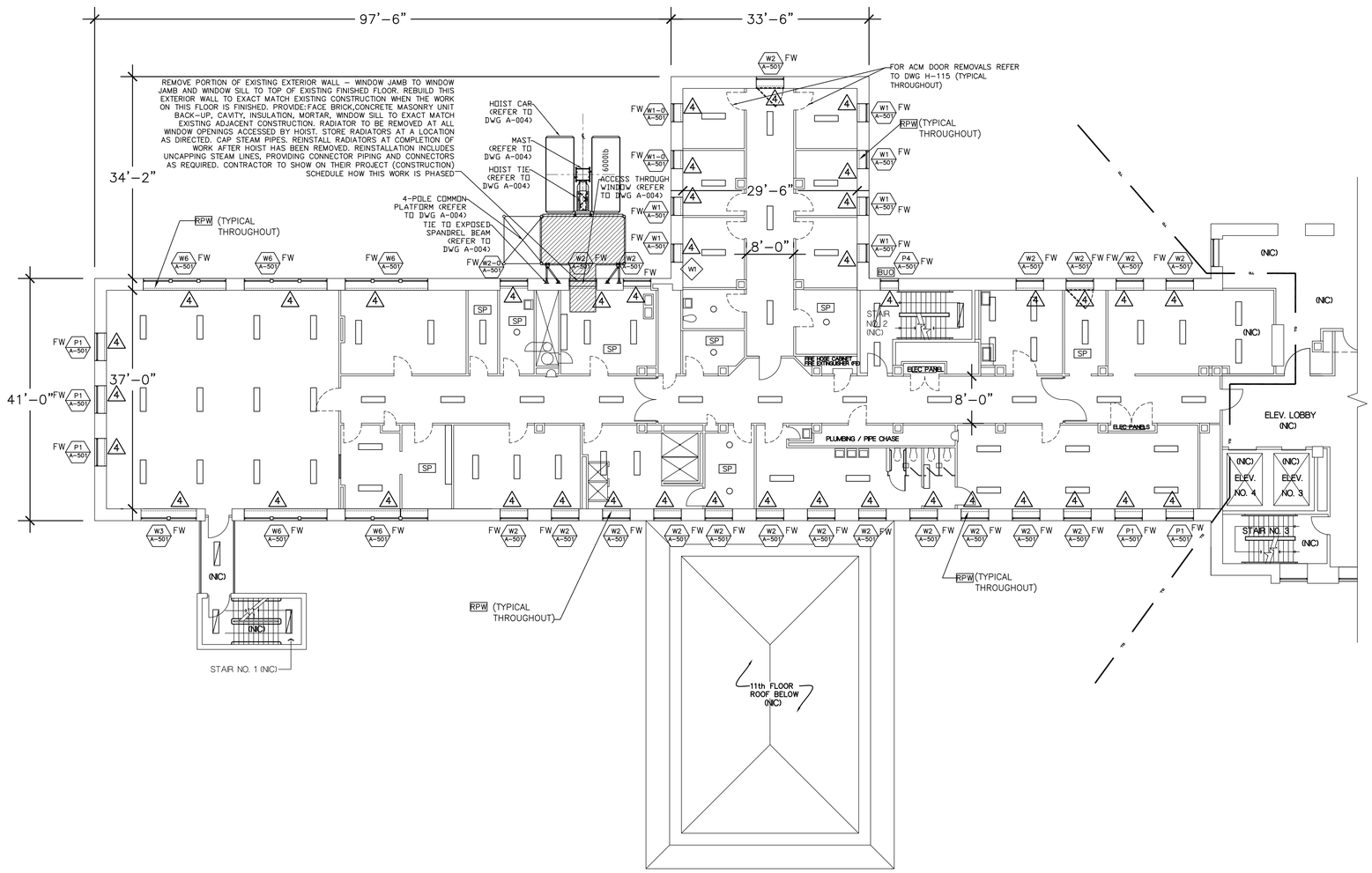

FOURTEENTH FLOOR WINDOW INSTALLATION PLAN

3/32" = 1'-0"

REFERENCE DRAWING

NYS OFFICE OF GENERAL SERVICES

Serving New York

ANDREW M. CUOMO
Governor
ROANN M. DESTITO
Commissioner
JAMES M. DAVIES, A.I.A.
Deputy Commissioner, Design and Construction

CONSULTANT

KEY PLAN

A–SIDE B–SIDE (NIC)

TRUE NORTH

PROJECT NORTH

WARNING:

THE ALTERATION OF THIS MATERIAL IN ANY WAY, UNLESS DONE UNDER THE DIRECTION OF A COMPARABLE PROFESSIONAL, I.E. ARCHITECT FOR AN ARCHITECT, ENGINEER FOR AN ENGINEER OR LANDSCAPE ARCHITECT FOR A LANDSCAPE ARCHITECT, IS A VIOLATION OF THE NEW YORK STATE EDUCATION LAW AND/OR REGULATIONS AND IS A CLASS 'A' MISDEMEANOR.

REGISTERED ARCHITECT DAVID W. MILLER 026832 STATE OF NEW YORK

CONTRACT:
CONSTRUCTION

TITLE:
ASBESTOS REMOVAL, DEMOLITION, AND REPLACE WINDOWS
DUNLAP BUILDING NO. 102, A–SIDE

LOCATION:
MANHATTAN PSYCHIATRIC CENTER
600 E. 125th STREET
WARDS ISLAND, NY 10035

CLIENT:
OFFICE OF MENTAL HEALTH

"REVISED DRAWING 12/26/2012"

MARK	DATE	DESCRIPTION
FINAL	10/3/2012	BID DOCUMENT

PROJECT NUMBER:	Q0763 – C
DESIGNED BY:	DWM
DRAWN BY:	SL
FIELD CHECK:	OGS
APPROVED:	DWM

SHEET TITLE:
FOURTEENTH FLOOR DEMOLITION AND WINDOW INSTALLATION PLAN

DRAWING NUMBER:
A–115

SHEET 41 OF 56

Jan 02,2013 – 12:35pm
V:\Designed\Const\p001xx\Q0763\Cadarch\A–115_Q0763_Rev–Add4.dwg
36x24 PLOT SHEET

ABANDONED MECHANICAL DEMOLITION PLAN NOTES:

4 EXISTING UNIT HEATERS AND RADIATORS TO REMAIN FOR TEMPORARY HEAT.

MISCELLANEOUS SYMBOLS/NOTES:

SS SECURITY SCREEN, EXISTING STEEL SS AT INTERIOR OF EXISTING WINDOW OPENING – REMOVE.

SSF SECURITY SCREEN FRAME ONLY, EXISTING – REMOVE. NO SECURITY SCREENS HERE.

SP SPRINKLERS, EXISTING AT ROOMS DENOTED THUS – SHALL REMAIN UNDISTURBED.

BUO BOARDED UP OPENING AT EXISTING WINDOW EXTERIOR – REMOVE.

RPW AT ALL EXISTING WINDOW OPENINGS TO RECEIVE WINDOW REPLACEMENT– BASEMENT FLOOR AND FIRST (1ST) FLOOR THROUGH SIXTEENTH (16TH) FLOORS, INCLUSIVE: REMOVE EXISTING INTERIOR WYTHE OF EXISTING EXTERIOR WALL ASSEMBLY WHICH CONSISTS OF 3"± THICK CMU WITH PLASTER FINISH (4"± TOTAL THICKNESS). REMOVE ALL THIS EXISTING INTERIOR WYTHE ASSEMBLY (INCLUDING ALL EXISTING BASE MATERIAL WHERE APPLICABLE) FROM EXISTING WINDOW JAMB TO EXISTING WINDOW JAMB, FROM TOP OF EXISTING FINISH FLOOR TO TOP OF EXISTING WINDOW STOOL, REMOVE ALL OF THE EXISTING STEEL SECURITY RADIATOR COVER ASSEMBLIES IN THEIR ENTIRETIES. REMOVE ALL EXISTING WINDOW STOOLS. AT ALL EXISTING WINDOW JAMB RETURNS: REMOVE THOSE PORTIONS OF THE EXISTING INTERIOR WYTHE OF EXISTING EXTERIOR WALL ASSEMBLY CONSISTING OF CMU'S AND PLASTER (SEE ABOVE) THAT NEED TO BE REMOVED TO INSTALL THE WINDOW CLIPS. SEE ALSO DRAWING NUMBERS: A–501, A–502, A–510, A–511, A–512, A–513, A–514 AND A–515 FOR DETAILED INFORMATION.

WINDOW NOTES:

FW – FURNISHED WINDOW (ALUMINUM SECURITY WINDOW FURNISHED BY OMH)

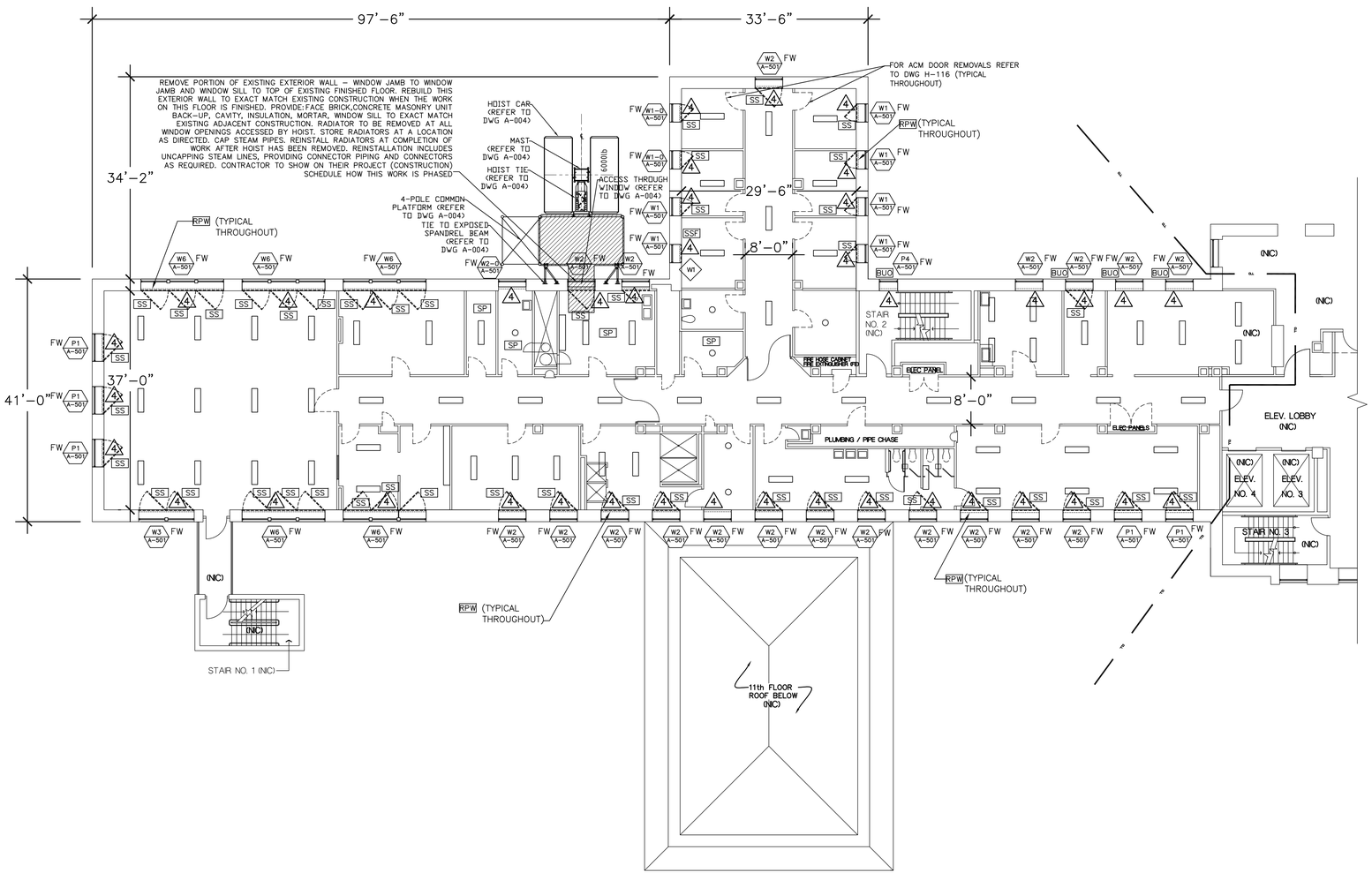

FIFTEENTH FLOOR WINDOW INSTALLATION PLAN
3/32" = 1'-0"

REFERENCE DRAWING

NYS OFFICE OF GENERAL SERVICES
Serving New York
ANDREW M. CUOMO
Governor
ROANN M. DESTITO
Commissioner
JAMES M. DAVIES, A.I.A.
Deputy Commissioner, Design and Construction

CONSULTANT

KEY PLAN
A–SIDE
B–SIDE (NIC)
TRUE NORTH
PROJECT NORTH

WARNING:
THE ALTERATION OF THIS MATERIAL IN ANY WAY, UNLESS DONE UNDER THE DIRECTION OF A COMPARABLE PROFESSIONAL, I.E. ARCHITECT FOR AN ARCHITECT, ENGINEER FOR AN ENGINEER OR LANDSCAPE ARCHITECT FOR A LANDSCAPE ARCHITECT, IS A VIOLATION OF THE NEW YORK STATE EDUCATION LAW AND/OR REGULATIONS AND IS A CLASS 'A' MISDEMEANOR.

REGISTERED ARCHITECT DAVID W. MILLER 026863 STATE OF NEW YORK

CONTRACT:
CONSTRUCTION

TITLE:
ASBESTOS REMOVAL, DEMOLITION, AND REPLACE WINDOWS
DUNLAP BUILDING NO. 102, A–SIDE

LOCATION:
MANHATTAN PSYCHIATRIC CENTER
600 E. 125th STREET
WARDS ISLAND, NY 10035

CLIENT:
OFFICE OF MENTAL HEALTH

"REVISED DRAWING 12/26/2012"

MARK	DATE	DESCRIPTION
FINAL	10/3/2012	BID DOCUMENT

PROJECT NUMBER:	Q0763 – C
DESIGNED BY:	DWM
DRAWN BY:	SL
FIELD CHECK:	OGS
APPROVED:	DWM

SHEET TITLE:
FIFTEENTH FLOOR DEMOLITION AND WINDOW INSTALLATION PLAN

DRAWING NUMBER:
A–116

SHEET 42 OF 56

Jan 02,2013 – 12:48pm
V:\Design4\Const\p401xx\Q0763\Cadarch\A–116_Q0763_Rev–Add4.dwg
36x24 PLOT SHEET

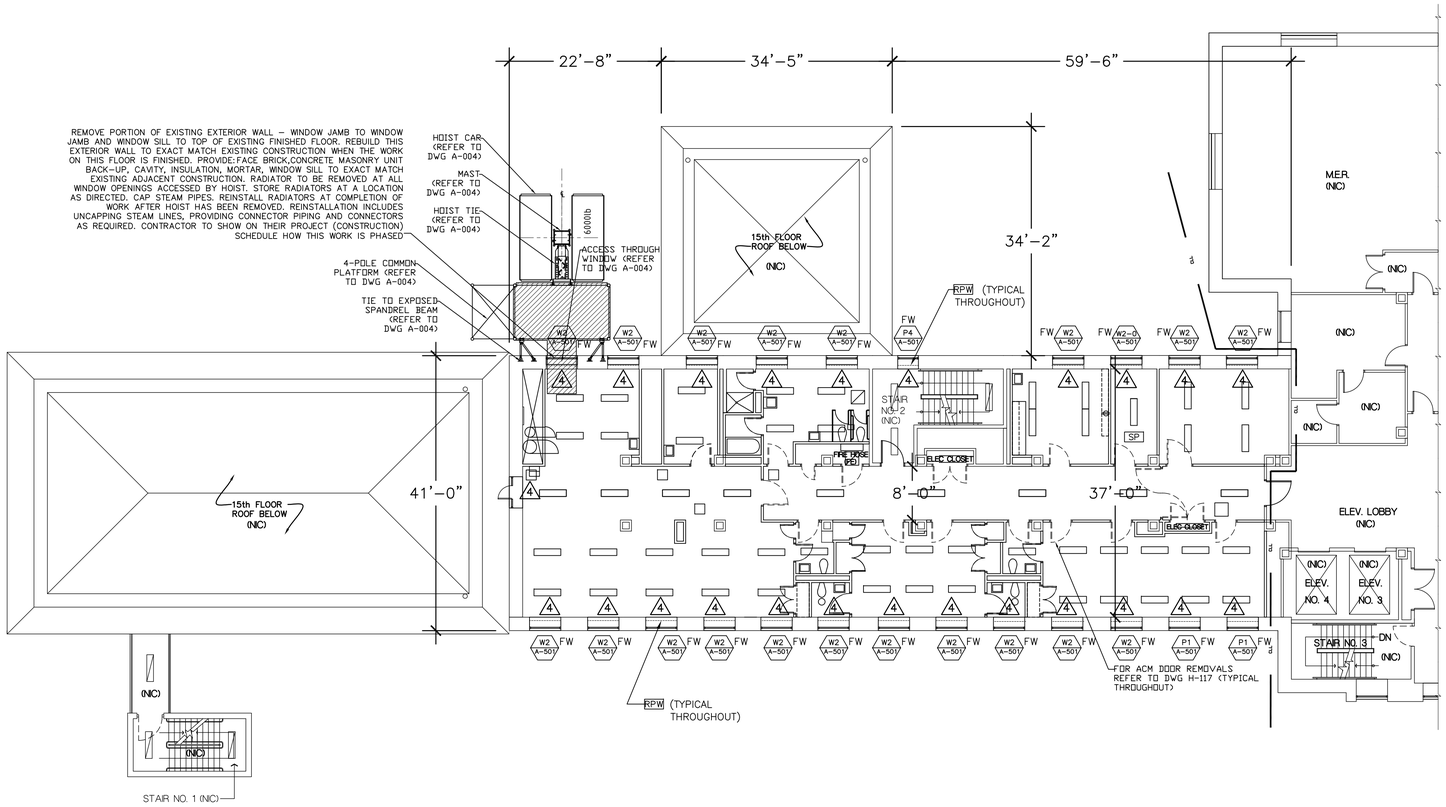

SIXTEENTH FLOOR WINDOW INSTALLATION PLAN
3/32" = 1'-0"

ABANDONED MECHANICAL DEMOLITION PLAN NOTES:

4 EXISTING UNIT HEATERS AND RADIATORS TO REMAIN FOR TEMPORARY HEAT.

MISCELLANEOUS SYMBOLS/NOTES:

SP SPRINKLERS, EXISTING AT ROOMS DENOTED THUS – SHALL REMAIN UNDISTURBED.

RPW AT ALL EXISTING WINDOW OPENINGS TO RECEIVE WINDOW REPLACEMENT– BASEMENT FLOOR AND FIRST (1ST) FLOOR THROUGH SIXTEENTH (16TH) FLOORS, INCLUSIVE: REMOVE EXISTING INTERIOR WYTHE OF EXISTING EXTERIOR WALL ASSEMBLY WHICH CONSISTS OF 3"± THICK CMU WITH PLASTER FINISH (4"± TOTAL THICKNESS). REMOVE ALL THIS EXISTING INTERIOR WYTHE ASSEMBLY (INCLUDING ALL EXISTING BASE MATERIAL WHERE APPLICABLE) FROM EXISTING WINDOW JAMB TO EXISTING WINDOW JAMB, FROM TOP OF EXISTING FINISH FLOOR TO TOP OF EXISTING WINDOW STOOL. REMOVE ALL OF THE EXISTING STEEL SECURITY RADIATOR COVER ASSEMBLIES IN THEIR ENTIRETIES. REMOVE ALL EXISTING WINDOW STOOLS. AT ALL EXISTING WINDOW JAMB RETURNS: REMOVE THOSE PORTIONS OF THE EXISTING INTERIOR WYTHE OF EXISTING EXTERIOR WALL ASSEMBLY CONSISTING OF CMU'S AND PLASTER (SEE ABOVE) THAT NEED TO BE REMOVED TO INSTALL THE WINDOW CLIPS. SEE ALSO DRAWING NUMBERS: A–501, A–502, A–510, A–511, A–512, A–513, A–514 AND A–515 FOR DETAILED INFORMATION.

WINDOW NOTES:

FW – FURNISHED WINDOW (ALUMINUM SECURITY WINDOW FURNISHED BY OMH)

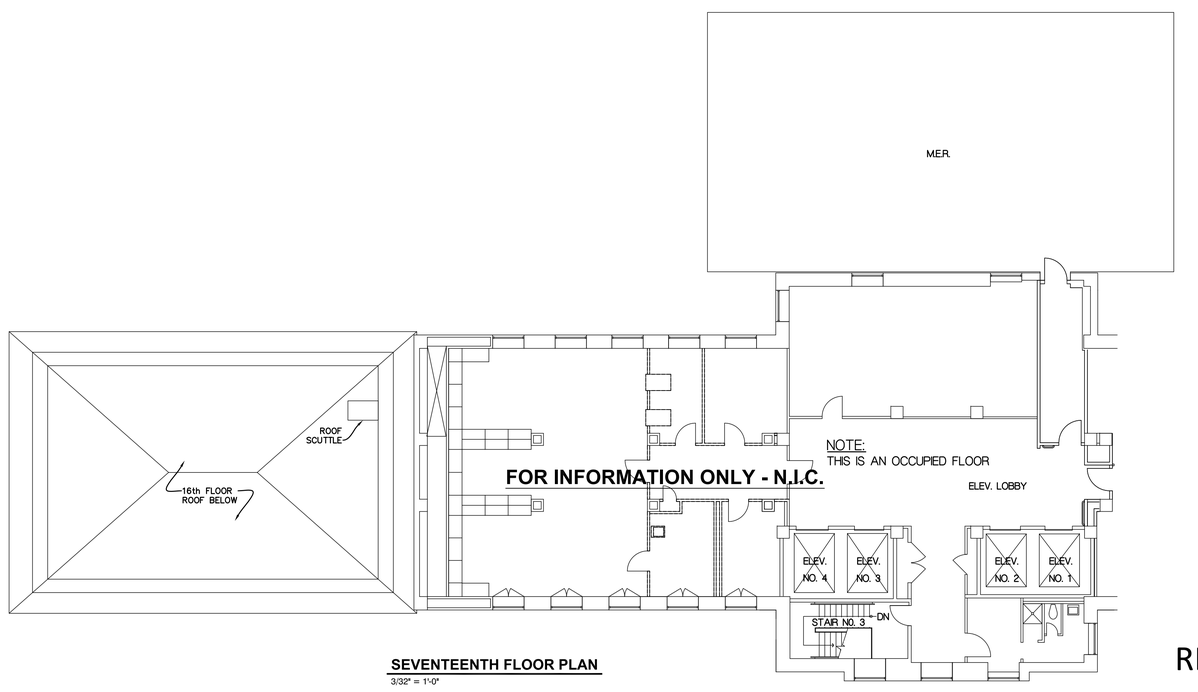

SEVENTEENTH FLOOR PLAN
3/32" = 1'-0"

REFERENCE DRAWING

NYS OFFICE OF GENERAL SERVICES
Serving New York

ANDREW M. CUOMO
Governor
ROANN M. DESTITO
Commissioner
JAMES M. DAVIES, A.I.A.
Deputy Commissioner, Design and Construction

CONSULTANT

KEY PLAN
A–SIDE
B–SIDE (NIC)
TRUE NORTH
PROJECT NORTH

WARNING:
THE ALTERATION OF THIS MATERIAL IN ANY WAY, UNLESS DONE UNDER THE DIRECTION OF A COMPARABLE PROFESSIONAL, I.E. ARCHITECT FOR AN ARCHITECT, ENGINEER FOR AN ENGINEER OR LANDSCAPE ARCHITECT FOR A LANDSCAPE ARCHITECT, IS A VIOLATION OF THE NEW YORK STATE EDUCATION LAW AND/OR REGULATIONS AND IS A CLASS 'A' MISDEMEANOR.

REGISTERED ARCHITECT DAVID W. MILLER 026863 STATE OF NEW YORK

CONTRACT:
CONSTRUCTION

TITLE:
ASBESTOS REMOVAL, DEMOLITION, AND REPLACE WINDOWS
DUNLAP BUILDING NO. 102, A–SIDE

LOCATION:
MANHATTAN PSYCHIATRIC CENTER
600 E. 125th STREET
WARDS ISLAND, NY 10035

CLIENT:
OFFICE OF MENTAL HEALTH

"REVISED DRAWING 12/26/2012"

MARK	DATE	DESCRIPTION
FINAL	10/3/2012	BID DOCUMENT

PROJECT NUMBER:	Q0763 – C
DESIGNED BY:	DWM
DRAWN BY:	DWM, SL
FIELD CHECK:	OGS
APPROVED:	DWM

SHEET TITLE:
SIXTEENTH FLOOR DEMOLITION AND WINDOW INSTALLATION PLAN

DRAWING NUMBER:
A–117

SHEET 43 OF 56

Jan 02,2013 – 12:54pm
V:\Designed\Const\p007xx\q0763\Cad\Arch\A-117_00763_Rev-Add4.dwg
36x24 PLOT SHEET

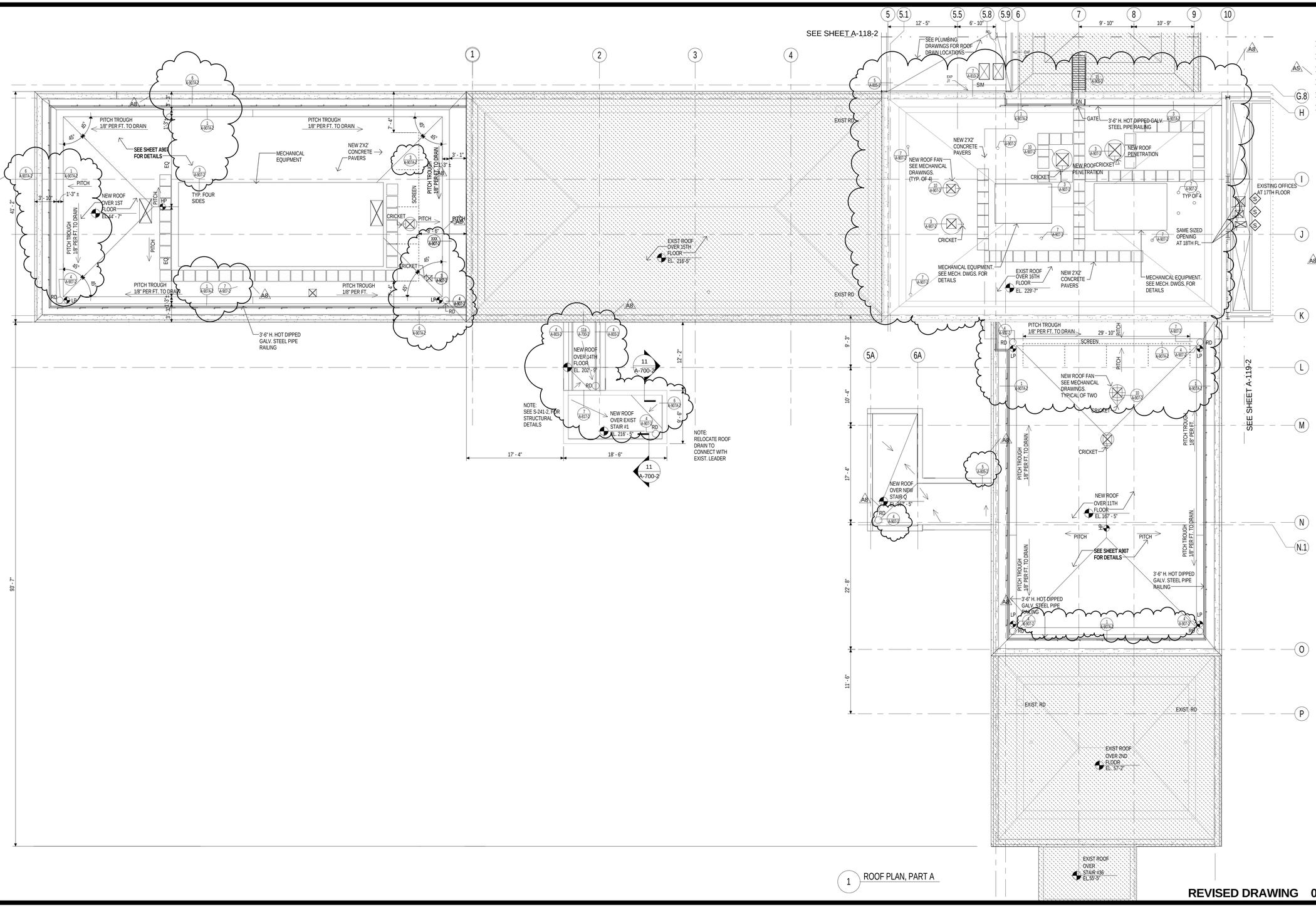

1 ROOF PLAN, PART A

SYMBOLS

- 1HR FIRE RATED PARTITION
- 2HR FIRE RATED PARTITION
- SMOKE PARTITION
- SMOKE BARRIER
- MASONRY INFILL
- NON RATED PARTITION
- EXISTING PARTITION
- INDICATES EXISTING ROOFS TO REMAIN
- INDICATES NEW OPENING FOR FUTURE SHAFT UNLESS OTHERWISE NOTED FOR ACTUAL SCOPE & DETAILS, SEE STRUCTURAL DRAWINGS
- INDICATES EXISTING OPENING

GENERAL NOTES

1. ALL EXISTING DIMENSIONS TO BE VERIFIED IN FIELD.
2. ALIGN PARTITION WITH WINDOW JAMB
3. REFER TO WINDOW CONDITIONS ON A-802
4. FOR ALL EXTERIOR WALLS TO GET WALL FURRING, SEE DWGS: A-801-2, A-802-2 & A-803-2
5. FOR BORROWED LIGHT(BL) ELEVATIONS SEE A-812, FOR DETAILS SEE A-906
6. CONTRACTOR TO PATCH EXISTING ROOFS AT NEW MECHANICAL PENETRATIONS INCLUDING NEW RAILING.
7. CONTRACTOR TO COORDINATE LOCATION OF PREFABRICATED EQUIPMENT CURBS WITH MECHANICAL EQUIPMENT SHOWN IN MECHANICAL DRAWINGS.
8. STRIKE SIDE OF THE DOOR IS 6" TYP. U.O.N.
9. DIMENSION IS BASED ON THE FINISHES FACE OF NEW OR EXISTING WALLS.

REVISED DRAWING 09/24/2015

NEW YORK STATE OF OPPORTUNITY. | Office of General Services

DESIGN & CONSTRUCTION

CONSULTANTS:

RBSD ARCHITECTS P.C. | STV 100 Years

A Joint Venture

225 Park Avenue South
New York, New York 10003

WARNING:

THE ALTERATION OF THIS MATERIAL IN ANY WAY, UNLESS DONE UNDER THE DIRECTION OF A COMPARABLE PROFESSIONAL, I.E. ARCHITECT FOR AN ARCHITECT, ENGINEER FOR AN ENGINEER OR LANDSCAPE ARCHITECT FOR A LANDSCAPE ARCHITECT, IS A VIOLATION OF THE NEW YORK STATE EDUCATION LAW AND/OR REGULATIONS AND IS A CLASS 'A' MISDEMEANOR.

REGISTERED ARCHITECT WILLIAM B. BELAN NO. 105

CONTRACT: CONSTRUCTION

TITLE: MAJOR BUILDING RENOVATIONS FOR THE MANHATTAN FORENSIC RELOCATION

LOCATION: MANHATTAN PSYCHIATRIC CENTER, BUILDING No. 102
600 EAST 125TH STREET WARDS ISLAND, NY10035

CLIENT: NYS OFFICE OF MENTAL HEALTH

MARK	DATE	DESCRIPTION
A8	09-24-2015	ADDENDUM # 8
A6	09-03-2015	ADDENDUM # 6
A5	08-12-2015	ADDENDUM # 5
	6-15-2015	BID DOCUMENT

PROJECT NUMBER:	44578
DESIGNED BY:	MAK / WW
DRAWN BY:	LR / LM / WW / JS / JM / DF / YB / YK
FIELD CHECK:	N/A
APPROVED:	WS / MAK / LF

SHEET TITLE: ROOF PLAN- PART A

BUILDING NUMBER:	DRAWING NUMBER:
102	A-117-2
SHEET	

9/25/2015 4:38:40 PM

SYMBOLS

- 1HR FIRE RATED PARTITION
- 2HR FIRE RATED PARTITION
- SMOKE PARTITION (A5)
- SMOKE BARRIER
- MASONRY INFILL
- NON RATED PARTITION
- EXISTING PARTITION
- INDICATES EXISTING ROOFS TO REMAIN
- INDICATES NEW OPENING FOR FUTURE SHAFT UNLESS OTHERWISE NOTED FOR ACTUAL SCOPE & DETAILS, SEE STRUCTURAL DRAWINGS
- INDICATES EXISTING OPENING

GENERAL NOTES

1. ALL EXISTING DIMENSIONS TO BE VERIFIED IN FIELD.
2. ALIGN PARTITION WITH WINDOW JAMB
3. REFER TO WINDOW CONDITIONS ON A-802
4. FOR ALL EXTERIOR WALLS TO GET WALL FURRING, SEE DWGS: A-801-2, A-802-2 & A-803-2 (A8)
5. FOR BORROWED LIGHT(BL) ELEVATIONS SEE A-812, FOR DETAILS SEE A-906
6. CONTRACTOR TO PATCH EXISTING ROOFS AT NEW MECHANICAL PENETRATIONS INCLUDING NEW RAILING.
7. CONTRACTOR TO COORDINATE LOCATION OF PREFABRICATED EQUIPMENT CURBS WITH MECHANICAL EQUIPMENT SHOWN IN MECHANICAL DRAWINGS.
8. STRIKE SIDE OF THE DOOR IS 6" TYP. U.O.N.
9. DIMENSION IS BASED ON THE FINISHES FACE OF NEW OR EXISTING WALLS.

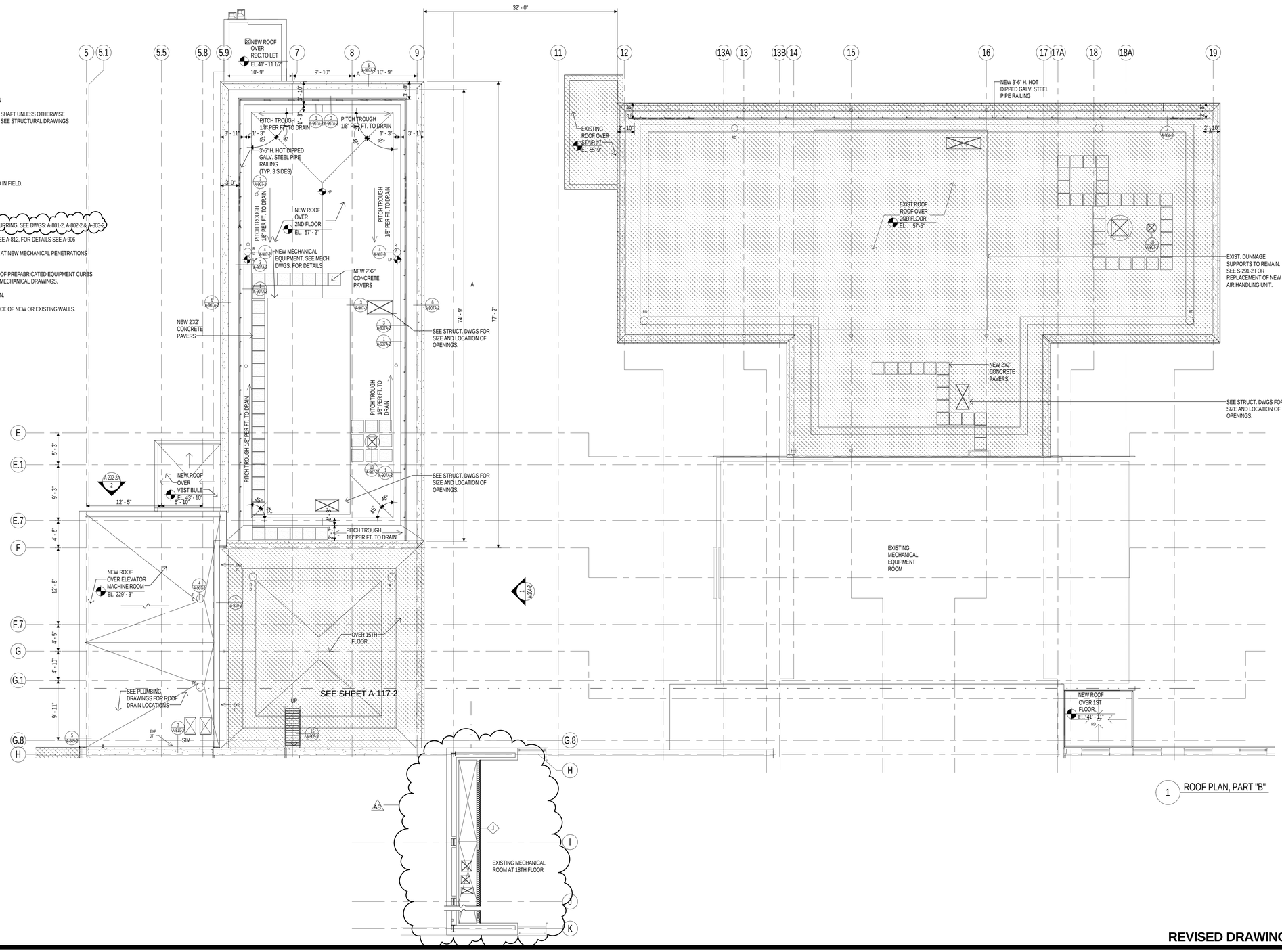

1 ROOF PLAN, PART "B"

PROJECT NORTH

0 4' 8' 16'
SCALE: 1/8" = 1'-0"

REVISED DRAWING 09/24/2015

NEW YORK STATE OF OPPORTUNITY. | Office of General Services

DESIGN & CONSTRUCTION

CONSULTANTS:

RBSD ARCHITECTS P.C. | STV 100 Years

A Joint Venture
225 Park Avenue South
New York, New York 10003

WARNING:
THE ALTERATION OF THIS MATERIAL IN ANY WAY, UNLESS DONE UNDER THE DIRECTION OF A COMPARABLE PROFESSIONAL. I.E. ARCHITECT FOR AN ARCHITECT, ENGINEER FOR AN ENGINEER OR LANDSCAPE ARCHITECT FOR A LANDSCAPE ARCHITECT, IS A VIOLATION OF THE NEW YORK STATE EDUCATION LAW AND/OR REGULATIONS AND IS A CLASS 'A' MISDEMEANOR.

REGISTERED ARCHITECT WILLIAM E. BOLAN STATE OF NEW YORK No. 10

CONTRACT: CONSTRUCTION

TITLE: MAJOR BUILDING RENOVATIONS FOR THE MANHATTAN FORENSIC RELOCATION

LOCATION: MANHATTAN PSYCHIATRIC CENTER, BUILDING No. 102
600 EAST 125TH STREET WARDS ISLAND, NY10035

CLIENT: NYS OFFICE OF MENTAL HEALTH

MARK	DATE	DESCRIPTION
A8	09-24-2015	ADDENDUM # 8
A6	09-03-2015	ADDENDUM # 6
A5	08-12-2015	ADDENDUM # 5
	6-15-2015	BID DOCUMENT

PROJECT NUMBER:	44578
DESIGNED BY:	MAK / WW
DRAWN BY:	LR / LM / WW / JS / JM / DF / YB / YK
FIELD CHECK:	N/A
APPROVED:	WS / MAK / LF

SHEET TITLE: ROOF PLAN- PART "B"

BUILDING NUMBER: 102

DRAWING NUMBER: A-118-2

SHEET

9/25/2015 5:25:57 PM

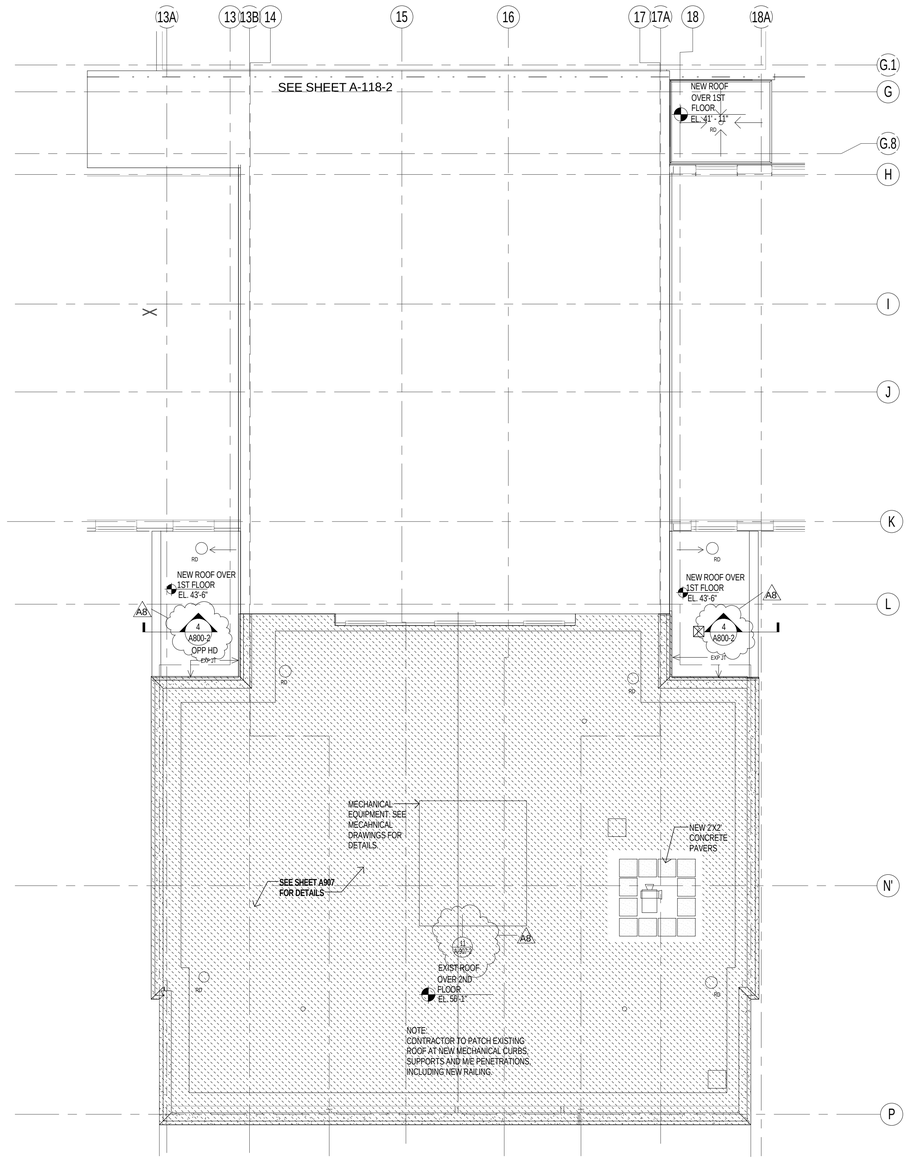

1 ROOF PLAN, PART "C"

SYMBOLS

- 1HR FIRE RATED PARTITION
- 2HR FIRE RATED PARTITION
- SMOKE PARTITION
- A5 SMOKE BARRIER
- MASONRY INFILL
- NON RATED PARTITION
- EXISTING PARTITION
- INDICATES EXISTING ROOFS TO REMAIN
- INDICATES NEW OPENING FOR FUTURE SHAFT UNLESS OTHERWISE NOTED FOR ACTUAL SCOPE & DETAILS, SEE STRUCTURAL DRAWINGS
- INDICATES EXISTING OPENING

GENERAL NOTES

1. ALL EXISTING DIMENSIONS TO BE VERIFIED IN FIELD.
2. ALIGN PARTITION WITH WINDOW JAMB
3. REFER TO WINDOW CONDITIONS ON A-802
4. FOR ALL EXTERIOR WALLS TO GET WALL FURRING, SEE DWGS: A-801-2, A-802-2 & A-803-2.
5. A8 FOR BORROWED LIGHT(BL) ELEVATIONS SEE A-812, FOR DETAILS SEE A-906
6. CONTRACTOR TO PATCH EXISTING ROOFS AT NEW MECHANICAL PENETRATIONS INCLUDING NEW RAILING.
7. CONTRACTOR TO COORDINATE LOCATION OF PREFABRICATED EQUIPMENT CURBS WITH MECHANICAL EQUIPMENT SHOWN IN MECHANICAL DRAWINGS.
8. STRIKE SIDE OF THE DOOR IS 6" TYP. U.O.N.
9. DIMENSION IS BASED ON THE FINISHES FACE OF NEW OR EXISTING WALLS.

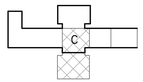

0 4' 8' 16'
SCALE: 1/8" = 1'-0"

REVISED DRAWING 09/24/2015

NEW YORK STATE OF OPPORTUNITY. | Office of General Services

DESIGN & CONSTRUCTION

CONSULTANTS:

RBSD ARCHITECTS P.C. | STV 100 Years

A Joint Venture

225 Park Avenue South
New York, New York 10003

WARNING:
THE ALTERATION OF THIS MATERIAL IN ANY WAY, UNLESS DONE UNDER THE DIRECTION OF A COMPARABLE PROFESSIONAL, I.E. ARCHITECT FOR AN ARCHITECT, ENGINEER FOR AN ENGINEER OR LANDSCAPE ARCHITECT FOR A LANDSCAPE ARCHITECT, IS A VIOLATION OF THE NEW YORK STATE EDUCATION LAW AND/OR REGULATIONS AND IS A CLASS 'A' MISDEMEANOR.

REGISTERED ARCHITECT WILLIAM E. BELLAN NO. 10[illegible] STATE OF NEW YORK

CONTRACT: CONSTRUCTION

TITLE: MAJOR BUILDING RENOVATIONS FOR THE MANHATTAN FORENSIC RELOCATION

LOCATION: MANHATTAN PSYCHIATRIC CENTER, BUILDING No. 102
600 EAST 125TH STREET WARDS ISLAND, NY10035

CLIENT: NYS OFFICE OF MENTAL HEALTH

MARK	DATE	DESCRIPTION
A8	09-24-2015	ADDENDUM # 8
A6	09-03-2015	ADDENDUM # 6
A5	08-12-2015	ADDENDUM # 5
	6-15-2015	BID DOCUMENT

PROJECT NUMBER: 44578
DESIGNED BY: MAK / WW
DRAWN BY: LR / LM / WW / JS / JM / DF / YB / YK
FIELD CHECK: N/A
APPROVED: WS / MAK / LF

SHEET TITLE: ROOF PLAN-PART "C"

BUILDING NUMBER: 102
DRAWING NUMBER: A-119-2
SHEET

9/25/2015 4:38:53 PM

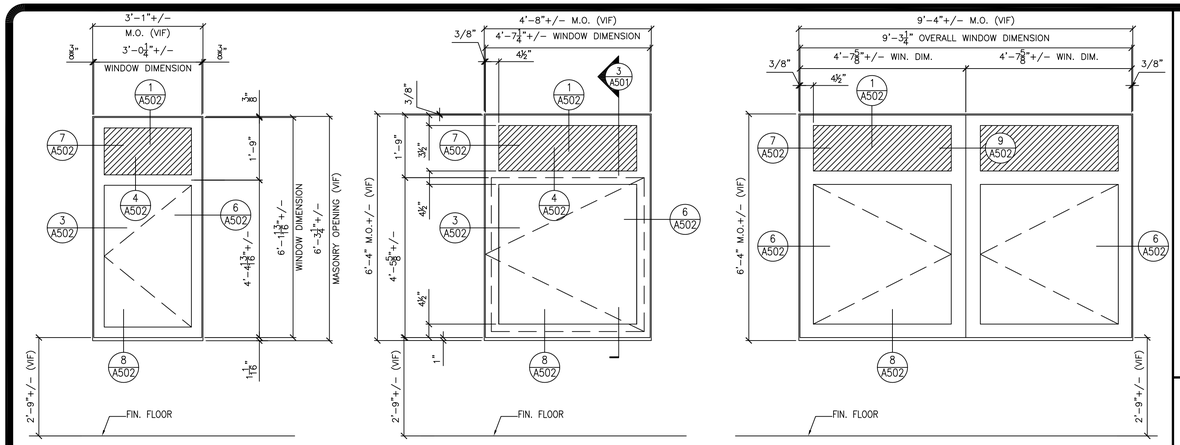

W1 (CLEAR GLAZING UNIT)

W1-O (OPAQUE GLAZING UNIT)

W2 (CLEAR GLAZING UNIT)

W2-O (OPAQUE GLAZING UNIT)

W3

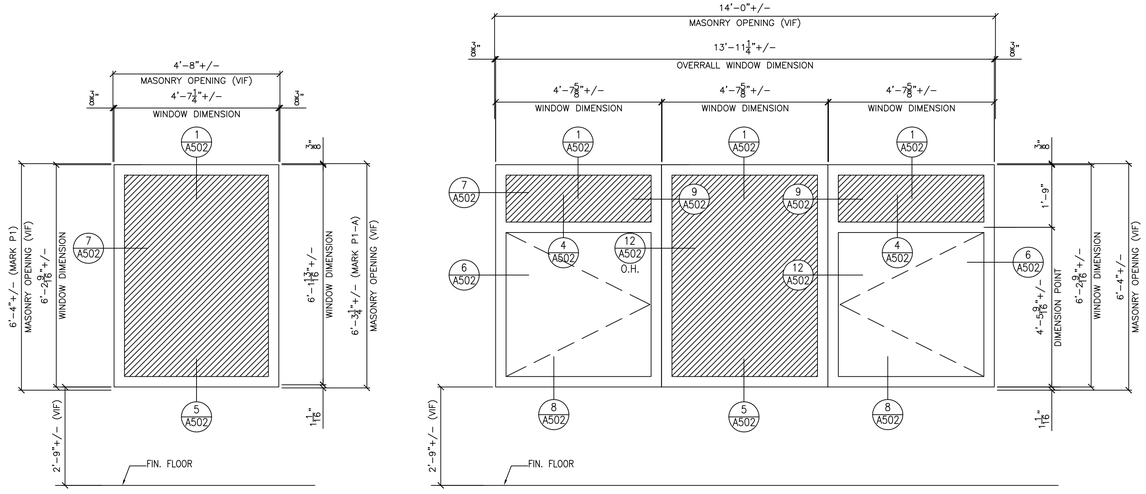

P1

P1-A

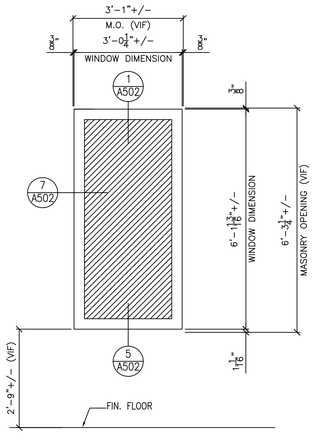

P4

W6

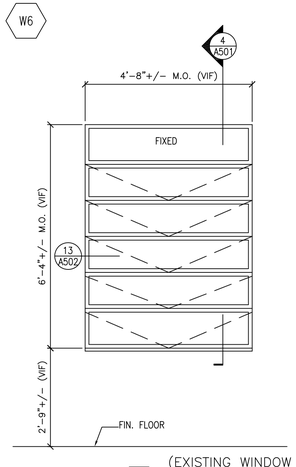

REM (EXISTING WINDOW TO BE REMOVED – W2 WINDOW SIZE SHOWN AS AN EXAMPLE – SECTION 4/A-501 APPLIES TO ALL WINDOW TYPES)

1 WINDOW TYPES

SCALE: 1/2"=1'-0"

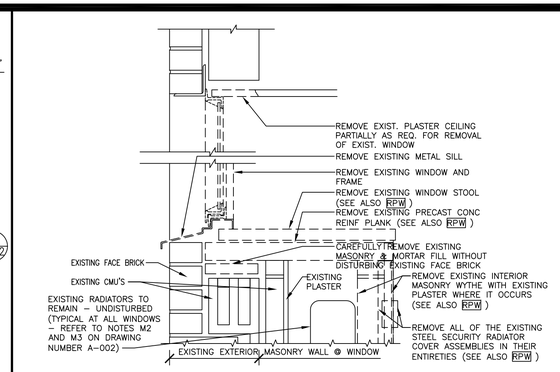

4 EXIST. WINDOW SECT.

SCALE: 1-1/2"=1'-0"

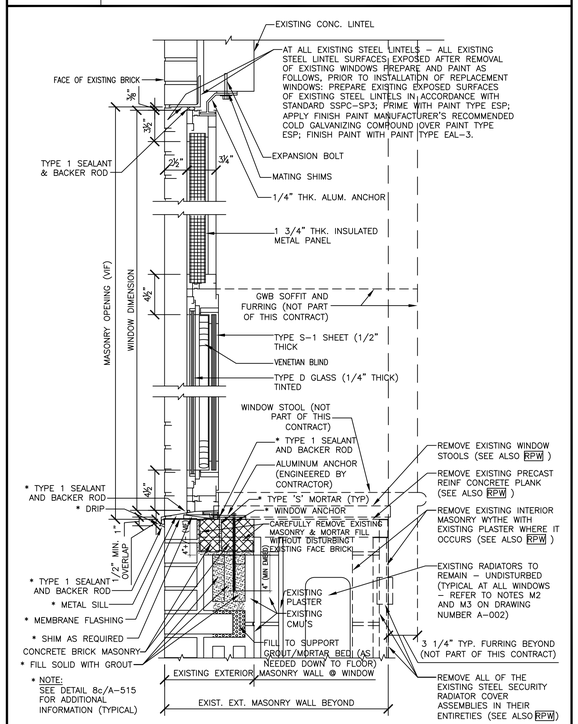

3 WINDOW DETAIL

SCALE: 1-1/2"=1'-0"

NOTES - WINDOWS:

1. WINDOW UNITS, INCLUSIVE OF FRAMES, PANELS, GLAZING, BLINDS AND ALL RELATED APPURTENANCES, THAT ARE FURNISHED BY OMH AND INSTALLED BY THIS CONTRACTOR. ALL THESE ITEMS ARE STORED BY OMH ON SITE – SEE NOTE 5: QUANTITY: APPROXIMATELY 450 SUB-TOTAL – WINDOW UNITS STORED IN TRAILERS.
2. WINDOW UNITS, INCLUSIVE OF FRAMES, PANELS, GLAZING, BLINDS AND ALL RELATED APPURTENANCES, THAT ARE PROVIDED (FURNISHED BY THIS CONTRACT AND INSTALLED BY THIS CONTRACTOR) BY THIS Q0763-C CONTRACT: QUANTITY: APPROXIMATELY 340 SUB-TOTAL – IN ADDITION TO STORED WINDOWS.
3. TOTAL WINDOW UNITS (INCLUSIVE OF FRAMES, PANELS, GLAZING, BLINDS AND ALL RELATED APPURTENANCES) THAT ARE FURNISHED BY OMH (450 – SEE NOTE 1 ABOVE) AND PROVIDED BY THIS CONTRACT (340 – SEE NOTE 2 ABOVE): QUANTITY: APPROXIMATELY 790 TOTAL.
4. THE FOLLOWING REPORT IS INCLUDED IN THE APPENDIX OF THE PROJECT MANUAL, FOR THE CONTRACTOR'S INFORMATION AND USE: "GLAZING INSPECTION AND INVENTORY, MANHATTAN PSYCHIATRIC CENTER, DATED JUNE 19, 2008".
5. THE CONTRACTOR SHALL INSPECT, CLEAN AND STERILIZE ALL WINDOW UNITS, PANELS, AND ALL RELATED WINDOW PARAPHERNALIA THAT HAVE BEEN STORED BY OMH IN THE FOUR (4) TRACTOR-TRAILER SIZED TRAILERS ON MPC SITE.
6. THE CONTRACTOR SHALL PROVIDE A DETAILED SURVEY/INVENTORY IN A FORM ACCEPTABLE TO THE DIRECTOR'S REPRESENTATIVE. THIS SURVEY SHALL INCLUDE A DETAILED ACCOUNT OF ALL THAT IS STORED IN THE FOUR (4) TRACTOR-TRAILER SIZED TRAILERS ON MPC SITE. THE CONTRACTOR'S SURVEY/INVENTORY SHALL INCLUDE ALL OF THE FOLLOWING, BUT SHALL NOT BE LIMITED TO: WINDOWS, FRAMES, PANELS, GLAZING, BLINDS, GASKETS AND ALL RELATED WINDOW PARAPHERNALIA. THE SURVEY/INVENTORY SHALL LIST THE EXACT: QUANTITIES, SIZES, TYPES OF, CONDITION OF ALL THESE AFOREMENTIONED ITEMS. THE SURVEY/INVENTORY SHALL ALSO PROVIDE A DETAILED ACCOUNTING OF ALL DAMAGES, DAMAGED ITEMS, MISSING PARTS AND/OR ANYTHING RELATED.
7. ORDER OF FURNISHED/STORED WINDOWS (SEE NOTE 1 ABOVE) INSTALLATION: THE STORED WINDOWS SHALL BE INSTALLED BEGINNING AT THE SIXTEENTH FLOOR AND PROCEEDING DOWNWARD TO EACH PRECEDING FLOOR UNTIL THESE WINDOWS HAVE BEEN EXHAUSTED. THESE WINDOWS CAN ALSO BE INSTALLED IN THE BASEMENT FLOOR LEVEL WHERE POSSIBLE, ALSO.
8. ORDER OF PROVIDED WINDOWS (FURNISHED BY THIS CONTRACT AND INSTALLED BY THIS CONTRACTOR – SEE NOTE 2 ABOVE) INSTALLATION: THESE WINDOWS SHALL BE INSTALLED BEGINNING AT THE FIRST FLOOR AND PROCEEDING UPWARDS TO EACH SUCCEEDING FLOOR TO MEET WITH THE FURNISHED/STORED WINDOWS (FURNISHED BY OMH).
9. FIELD VERIFICATION OF ALL EXISTING WINDOW OPENINGS: THE CONTRACTOR WILL FIELD VERIFY ALL SEVEN HUNDRED AND NINETY (790) EXISTING WINDOW OPENING DIMENSIONS AND VERIFY THE EXISTING CONDITIONS OF ALL HEADS, JAMBS AND SILLS SUBSTRATES OF ALL SEVEN HUNDRED AND NINETY (790) EXISTING WINDOW OPENINGS AND PROVIDE A DETAILED/THOROUGH SET OF SHOP DRAWINGS FOR ALL WINDOW OPENINGS IN STRICT ACCORDANCE WITH ALL THE PROVISIONS OF THE CONSTRUCTION DOCUMENTS – THIS APPLIES TO ALL EXISTING WINDOW OPENINGS WHETHER FOR EXISTING OPENINGS THAT WILL RECEIVE WINDOWS PROVIDED (SEE NOTES ABOVE) BY THE CONTRACT OR FOR EXISTING OPENINGS THAT WILL RECEIVE WINDOWS FURNISHED (STORED IN THE TRAILERS – SEE NOTES ABOVE) BY OMH.
10. FOR ALL SEVEN HUNDRED AND NINETY (790) WINDOW OPENINGS – WHETHER FOR EXISTING OPENINGS THAT WILL RECEIVE WINDOWS PROVIDED (SEE NOTES ABOVE) BY THE CONTRACT OR FOR EXISTING OPENINGS THAT WILL RECEIVE WINDOWS FURNISHED (STORED IN THE TRAILERS – SEE NOTES ABOVE) BY OMH – THE CONTRACTOR WILL PROVIDE ALL OF THE FOLLOWING: WINDOW ANCHORS, SHIMS, FLASHING, SUB-SILLS, SILL SUPPORTS, TAPCONS, BOLTS-NUTS-WASHERS, BACKER RODS, SEALANT, AND ANY OTHER MISCELLANEOUS ACCESSORIES NECESSARY/NEEDED TO COMPLETE THE INSTALLATION OF THESE WINDOW UNITS.
11. WEATHER-TIGHT ENCLOSURES AT ALL EXISTING WINDOW OPENINGS – APPLIES TO ALL SEVEN HUNDRED AND NINETY (790) WINDOW OPENINGS – MOST LIKELY NOT AT THE SAME TIME. THE ENCLOSURES CAN BE MULTI-USE, BUT NEVERTHELESS, EVERY WINDOW OPENING THAT HAS HAD ITS EXISTING WINDOW REMOVED MUST BE IMMEDIATELY ENCLOSED, WEATHER-TIGHT, UNTIL THE FURNISHED/STORED OR PROVIDED WINDOW CAN BE INSTALLED. THE CONTRACTOR WILL PROVIDE THESE WEATHER-TIGHT ENCLOSURES CONSTRUCTED PRELIMINARILY AS FOLLOWS AND DESIGNED BY A LICENSED NEW YORK STATE PROFESSIONAL ENGINEER – SEE FOLLOWING: BLOCK-UP EXISTING WINDOW OPENINGS WITH 2x4'S AT HEAD, JAMBS AND SILL AND 2x4 STUDS AT 16" OC VERTICAL; AND ¾" CDX PLYWOOD (SPAN RATING 48/24) AT EXTERIOR; PROVIDE APPROVED GALVANIZED STEEL FASTENERS AT HEAD, JAMBS AND SILLS. THE WEATHER-TIGHT WINDOW OPENING ENCLOSURE ASSEMBLY SHALL BE DESIGNED TO WITHSTAND 'DESIGN AND WIND PRESSURE' AS DETERMINED IN STRICT ACCORDANCE WITH ASCE 7-98 AND THE CONTRACTOR MUST RETAIN A LICENSED NEW YORK STATE PROFESSIONAL ENGINEER TO DESIGN/ANALYZE THE WEATHER-TIGHT ENCLOSURE ASSEMBLY PRIOR TO ANY FABRICATION. SUBMIT TO OGS FOR APPROVAL THE FOLLOWING: SEALED AND SIGNED SHOP DRAWINGS BY A LICENSED NYS PE. THE SHOP DRAWINGS MUST BE APPROVED BY OGS DESIGN PRIOR TO ANY FABRICATION AND/OR INSTALLATION OF THESE WEATHER-TIGHT ENCLOSURE ASSEMBLIES. THESE SHOP DRAWINGS SHALL INCLUDE ALL THE NECESSARY ITEMS TO COMPLETE THE ASSEMBLY, SUCH AS, BUT NOT LIMITED TO: STUD SIZE AND SPACING; SHEATHING REQUIREMENTS; FASTENER TYPES, DIAMETER AND SPACING; FASTENER EMBEDMENT REQUIREMENTS; NUTS, BOLTS AND WASHERS – ANY AND/OR ALL NECESSARY APPURTENANCES REQUIRED TO COMPLETE THE WORK.

RPW AT ALL EXISTING WINDOW OPENINGS TO RECEIVE WINDOW REPLACEMENT-BASEMENT FLOOR AND FIRST (1ST) FLOOR THROUGH SIXTEENTH (16TH) FLOORS, INCLUSIVE: REMOVE EXISTING INTERIOR WYTHE OF EXISTING EXTERIOR WALL ASSEMBLY WHICH CONSISTS OF 3"± THICK CMU WITH PLASTER FINISH (4"± TOTAL THICKNESS). REMOVE ALL THIS EXISTING INTERIOR WYTHE ASSEMBLY (INCLUDING ALL EXISTING BASE MATERIAL WHERE APPLICABLE) FROM EXISTING WINDOW JAMB TO EXISTING WINDOW JAMB, FROM TOP OF EXISTING FINISH FLOOR TO TOP OF EXISTING WINDOW STOOL, REMOVE ALL OF THE EXISTING STEEL SECURITY RADIATOR COVER ASSEMBLIES IN THEIR ENTIRETIES. REMOVE ALL EXISTING WINDOW STOOLS. AT ALL EXISTING WINDOW JAMB RETURNS: REMOVE THOSE PORTIONS OF THE EXISTING INTERIOR WYTHE OF EXISTING EXTERIOR WALL ASSEMBLY CONSISTING OF CMU'S AND PLASTER (SEE ABOVE) THAT NEED TO BE REMOVED TO INSTALL THE WINDOW CLIPS. SEE ALSO DRAWING NUMBERS: A-501, A-502, A-510, A-511, A-512, A-513, A-514 AND A-515 FOR DETAILED INFORMATION.

REFERENCE DRAWING

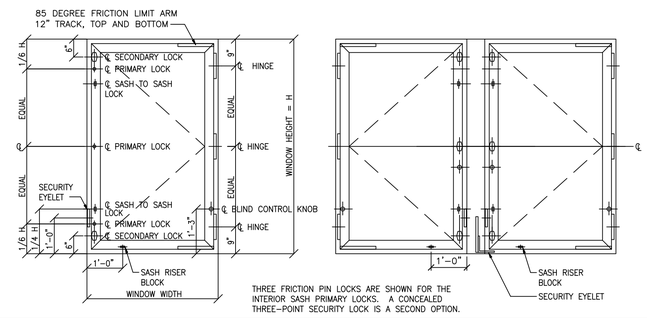

2 TYPICAL WINDOW HARDWARE LAYOUT (for reference)

SCALE: 1/2"=1'-0" VIEW FROM INTERIOR

NYS OFFICE OF GENERAL SERVICES

Serving New York

ANDREW M. CUOMO
Governor
ROANN M. DESTITO
Commissioner
JAMES M. DAVIES, A.I.A.
Deputy Commissioner, Design and Construction

CONSULTANT

KEY PLAN

A-SIDE B-SIDE (NIC)

TRUE NORTH

PROJECT NORTH

WARNING:

THE ALTERATION OF THIS MATERIAL IN ANY WAY, UNLESS DONE UNDER THE DIRECTION OF A COMPARABLE PROFESSIONAL, I.E. ARCHITECT FOR AN ARCHITECT, ENGINEER FOR AN ENGINEER OR LANDSCAPE ARCHITECT FOR A LANDSCAPE ARCHITECT, IS A VIOLATION OF THE NEW YORK STATE EDUCATION LAW AND/OR REGULATIONS AND IS A CLASS 'A' MISDEMEANOR.

REGISTERED ARCHITECT DAVID W. MILLER 026832 STATE OF NEW YORK

CONTRACT:
CONSTRUCTION

TITLE:
ASBESTOS REMOVAL, DEMOLITION, AND REPLACE WINDOWS
DUNLAP BUILDING NO. 102, A-SIDE

LOCATION:
MANHATTAN PSYCHIATRIC CENTER
600 E. 125th STREET
WARDS ISLAND, NY 10035

CLIENT:
OFFICE OF MENTAL HEALTH

"REVISED DRAWING 12/26/2012"

MARK	DATE	DESCRIPTION
FINAL	10/3/2012	BID DOCUMENT

PROJECT NUMBER:	Q0763 – C
DESIGNED BY:	DWM
DRAWN BY:	SL, R. PLANTE, DWM
FIELD CHECK:	OGS
APPROVED:	DWM

SHEET TITLE:
WINDOW TYPES AND ELEVATIONS

DRAWING NUMBER:
A-501

SHEET 49 OF 56

Jan 02,2013 – 1:58pm
V:\Designed\Const\p\p07xx\q0763\CadArch\A-501_Q0763_Rev-Add4.dwg
16x24 PLOT SHEET

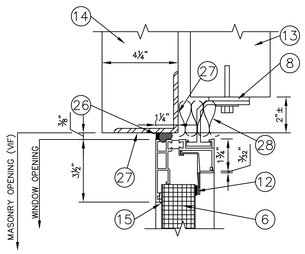

1 A-502 HEAD DETAIL
SCALE: 3" = 1'-0"

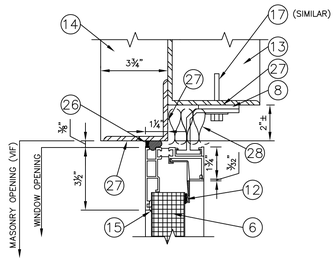

2 A-502 HEAD DETAIL (ALTERNATE TO 1/A-502)
SCALE: 3" = 1'-0"

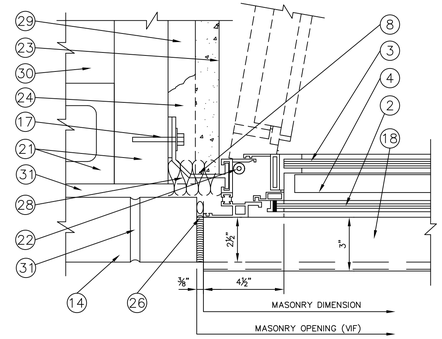

3 A-502 JAMB DETAIL
SCALE: 3" = 1'-0"

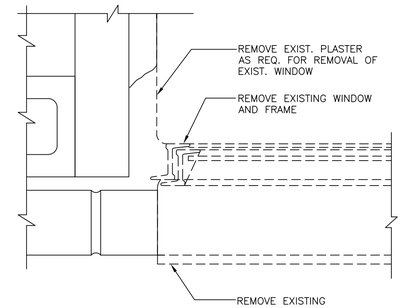

13 A-502 EXISTING WINDOW JAMB
SCALE: 3" = 1'-0"

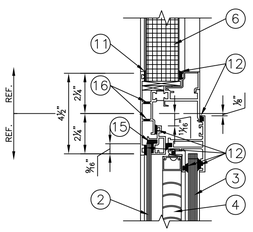

4 A-502 HORIZONTAL MULLION DETAIL
SCALE: 3" = 1'-0"

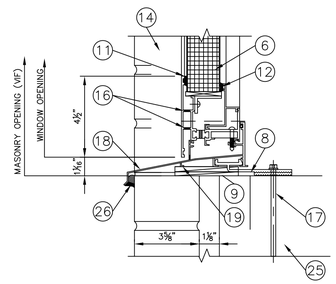

5 A-502 SILL DETAIL
SCALE: 3" = 1'-0"

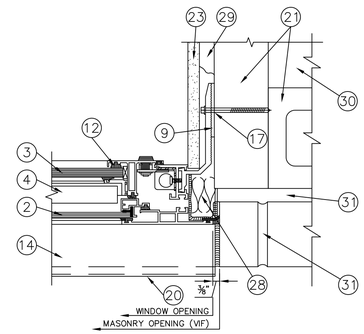

6 A-502 JAMB DETAIL
SCALE: 3" = 1'-0"

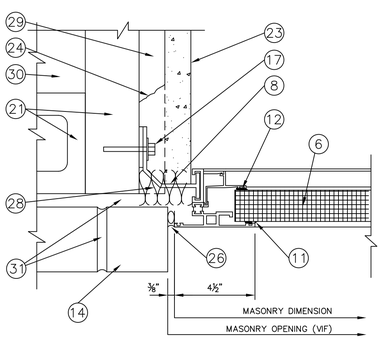

7 A-502 JAMB DETAIL
SCALE: 3" = 1'-0"

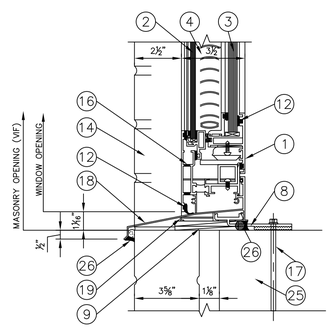

8 A-502 SILL DETAIL
SCALE: 3" = 1'-0"

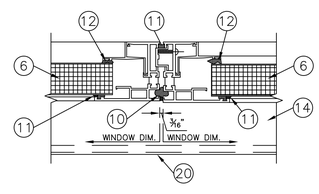

9 A-502 VERTICAL MULLION DETAIL
SCALE: 3" = 1'-0"

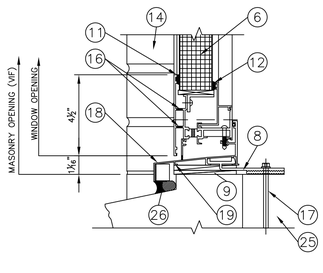

10 A-502 SILL DETAIL (ALTERNATE TO 5/A-10)
SCALE: 3" = 1'-0"

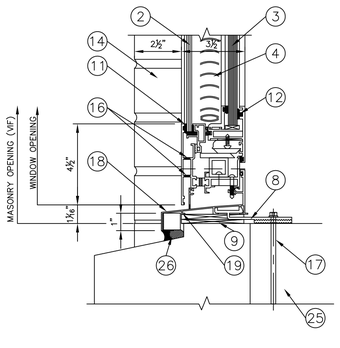

11 A-502 SILL DETAIL (ALTERNATE TO 8/A-502)
SCALE: 3" = 1'-0"

REFERENCE DRAWING

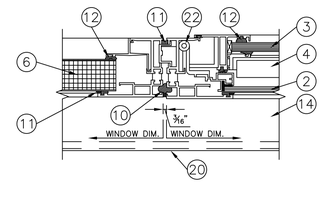

12 A-502 VERTICAL MULLION DETAIL
SCALE: 3" = 1'-0"

KEY NOTES:

1. EXTRUDED ALUMINUM DOUBLE IN-SWING CASEMENT WINDOW UNIT
2. ¼" TYPE 'D' GLASS
3. ⅜" TYPE 'S-1' GLASS
4. INTEGRAL VENETIAN BLINDS
5. NOT USED
6. METAL WINDOW PANEL – INSULATED – 1¾" THICK
7. NOT USED
8. ALUMINUM ANCHOR (ENGINEERED BY CONTRACTOR)
9. FULL DEPTH SHIM, AS REQUIRED
10. BACKER ROD & SEALANT (AS RECOMMENDED BY WINDOW MANUFACTURER)
11. SEALANT (AS RECOMMENDED BY WINDOW AND INSULATED PANEL MANUFACTURERS)
12. NEOPRENE GASKET
13. EXISTING LINTEL
14. EXISTING BRICK
15. TYPE 1 SEALANT
16. WEEP HOLE/BAFFLE
17. WINDOW ANCHOR (CONTRACTOR TO SUBMIT ENGINEERING FOR APPROVAL)
18. EXTRUDED ALUMINUM SUBSILL (SEE ALSO 25 BELOW)
19. SILL SUPPORT
20. FLASHING – RUBBERIZED ASPHALT "PEEL AND STICK"
21. EXISTING CONCRETE/MASONRY (VIF)
22. EXTRUDED ALUMINUM HINGES W/ STAINLESS STEEL PIN
23. GWB FINISH (N.I.C.)
24. REMOVE EXISTING PLASTER TO ATTACH WINDOW JAMB ANCHORS DIRECTLY TO EXISTING MASONRY
25. SILL CONSTRUCTION – REFER TO DETAILS: 3/A-501, 4/A-501, 5a/A-513, 5b/A-513, 8a/A-514, 8b/A-514 AND 8c/A-515
26. BACKER ROD & TYPE 1 SEALANT

KEY NOTES (CONT):

27. AT ALL EXISTING STEEL LINTELS – ALL EXISTING STEEL LINTEL SURFACES EXPOSED AFTER REMOVAL OF EXISTING WINDOWS PREPARE AND PAINT AS FOLLOWS, PRIOR TO INSTALLATION OF REPLACEMENT WINDOWS: PREPARE EXISTING EXPOSED SURFACES OF EXISTING STEEL LINTELS IN ACCORDANCE WITH STANDARD SSPC-SP3; PRIME WITH PAINT TYPE ESP; APPLY FINISH PAINT MANUFACTURER'S RECOMMENDED COLD GALVANIZING COMPOUND OVER PAINT TYPE ESP; FINISH PAINT WITH PAINT TYPE EAL-3.
28. CLOSE INTERIOR VOID WITH INSULATION
29. EXISTING PLASTER TO REMAIN
30. EXISTING PIPE SPACE
31. EXISTING MORTAR JOINTS

NOTES - WINDOWS:

1. WINDOW UNITS, INCLUSIVE OF FRAMES, PANELS, GLAZING, BLINDS AND ALL RELATED APPURTENANCES, THAT ARE FURNISHED BY OMH AND INSTALLED BY THIS CONTRACTOR. ALL THESE ITEMS ARE STORED BY OMH ON SITE – SEE NOTE 5: QUANTITY: APPROXIMATELY 450 SUB-TOTAL – WINDOW UNITS STORED IN TRAILERS.
2. WINDOW UNITS, INCLUSIVE OF FRAMES, PANELS, GLAZING, BLINDS AND ALL RELATED APPURTENANCES, THAT ARE PROVIDED (FURNISHED BY THIS CONTRACT AND INSTALLED BY THIS CONTRACTOR) BY THIS Q0763-C CONTRACT: QUANTITY: APPROXIMATELY 340 SUB-TOTAL – IN ADDITION TO STORED WINDOWS.
3. TOTAL WINDOW UNITS (INCLUSIVE OF FRAMES, PANELS, GLAZING, BLINDS AND ALL RELATED APPURTENANCES) THAT ARE FURNISHED BY OMH (450 – SEE NOTE 1 ABOVE) AND PROVIDED BY THIS CONTRACT (340 – SEE NOTE 2 ABOVE): QUANTITY: APPROXIMATELY 790 TOTAL.
4. THE FOLLOWING REPORT IS INCLUDED IN THE APPENDIX OF THE PROJECT MANUAL, FOR THE CONTRACTOR'S INFORMATION AND USE: "GLAZING INSPECTION AND INVENTORY, MANHATTAN PSYCHIATRIC CENTER, DATED JUNE 19, 2008".
5. THE CONTRACTOR SHALL INSPECT, CLEAN AND STERILIZE ALL WINDOW UNITS, PANELS, AND ALL RELATED WINDOW PARAPHERNALIA THAT HAVE BEEN STORED BY OMH IN THE FOUR (4) TRACTOR-TRAILER SIZED TRAILERS ON MPC SITE.
6. THE CONTRACTOR SHALL PROVIDE A DETAILED SURVEY/INVENTORY IN A FORM ACCEPTABLE TO THE DIRECTOR'S REPRESENTATIVE. THIS SURVEY SHALL INCLUDE A DETAILED ACCOUNT OF ALL THAT IS STORED IN THE FOUR (4) TRACTOR-TRAILER SIZED TRAILERS ON MPC SITE. THE CONTRACTOR'S SURVEY/INVENTORY SHALL INCLUDE ALL OF THE FOLLOWING, BUT SHALL NOT BE LIMITED TO: WINDOWS, FRAMES, PANELS, GLAZING, BLINDS, GASKETS AND ALL RELATED WINDOW PARAPHERNALIA. THE SURVEY/INVENTORY SHALL LIST THE EXACT: QUANTITIES, SIZES, TYPES OF, CONDITION OF ALL THESE AFOREMENTIONED ITEMS. THE SURVEY/INVENTORY SHALL ALSO PROVIDE A DETAILED ACCOUNTING OF ALL DAMAGES, DAMAGED ITEMS, MISSING PARTS AND/OR ANYTHING RELATED.
7. ORDER OF FURNISHED/STORED WINDOWS (SEE NOTE 1 ABOVE) INSTALLATION: THE STORED WINDOWS SHALL BE INSTALLED BEGINNING AT THE SIXTEENTH FLOOR AND PROCEEDING DOWNWARD TO EACH PRECEDING FLOOR UNTIL THESE WINDOWS HAVE BEEN EXHAUSTED. THESE WINDOWS CAN ALSO BE INSTALLED IN THE BASEMENT FLOOR LEVEL WHERE POSSIBLE, ALSO.
8. ORDER OF PROVIDED WINDOWS (FURNISHED BY THIS CONTRACT AND INSTALLED BY THIS CONTRACTOR – SEE NOTE 2 ABOVE) INSTALLATION: THESE WINDOWS SHALL BE INSTALLED BEGINNING AT THE FIRST FLOOR AND PROCEEDING UPWARDS TO EACH SUCCEEDING FLOOR TO MEET WITH THE FURNISHED/STORED WINDOWS (FURNISHED BY OMH).
9. FIELD VERIFICATION OF ALL EXISTING WINDOW OPENINGS: THE CONTRACTOR WILL FIELD VERIFY ALL SEVEN HUNDRED AND NINETY (790) EXISTING WINDOW OPENING DIMENSIONS AND VERIFY THE EXISTING CONDITIONS OF ALL HEADS, JAMBS AND SILLS SUBSTRATES OF ALL SEVEN HUNDRED AND NINETY (790) EXISTING WINDOW OPENINGS AND PROVIDE A DETAILED/THOROUGH SET OF SHOP DRAWINGS FOR ALL WINDOW OPENINGS IN STRICT ACCORDANCE WITH ALL THE PROVISIONS OF THE CONSTRUCTION DOCUMENTS – THIS APPLIES TO ALL EXISTING WINDOW OPENINGS WHETHER FOR EXISTING OPENINGS THAT WILL RECEIVE WINDOWS PROVIDED (SEE NOTES ABOVE) BY THE CONTRACT OR FOR EXISTING OPENINGS THAT WILL RECEIVE WINDOWS FURNISHED (STORED IN THE TRAILERS – SEE NOTES ABOVE) BY OMH.
10. FOR ALL SEVEN HUNDRED AND NINETY (790) WINDOW OPENINGS – WHETHER FOR EXISTING OPENINGS THAT WILL RECEIVE WINDOWS PROVIDED (SEE NOTES ABOVE) BY THE CONTRACT OR FOR EXISTING OPENINGS THAT WILL RECEIVE WINDOWS FURNISHED (STORED IN THE TRAILERS – SEE NOTES ABOVE) BY OMH – THE CONTRACTOR WILL PROVIDE ALL OF THE FOLLOWING: WINDOW ANCHORS, SHIMS, FLASHING, SUB-SILLS, SILL SUPPORTS, TAPCONS, BOLTS-NUTS-WASHERS, BACKER RODS, SEALANT, AND ANY OTHER MISCELLANEOUS ACCESSORIES NECESSARY/NEEDED TO COMPLETE THE INSTALLATION OF THESE WINDOW UNITS.
11. WEATHER-TIGHT ENCLOSURES AT ALL EXISTING WINDOW OPENINGS – APPLIES TO ALL SEVEN HUNDRED AND NINETY (790) WINDOW OPENINGS – MOST LIKELY NOT AT THE SAME TIME. THE ENCLOSURES CAN BE MULTI-USE, BUT NEVERTHELESS, EVERY WINDOW OPENING THAT HAS HAD ITS EXISTING WINDOW REMOVED MUST BE IMMEDIATELY ENCLOSED, WEATHER-TIGHT, UNTIL THE FURNISHED/STORED OR PROVIDED WINDOW CAN BE INSTALLED. THE CONTRACTOR WILL PROVIDE THESE WEATHER-TIGHT ENCLOSURES CONSTRUCTED PRELIMINARILY AS FOLLOWS AND DESIGNED BY A LICENSED NEW YORK STATE PROFESSIONAL ENGINEER – SEE FOLLOWING: BLOCK-UP EXISTING WINDOW OPENINGS WITH 2x4'S AT HEAD, JAMBS AND SILL AND 2x4 STUDS AT 16" OC VERTICAL; AND ¾" CDX PLYWOOD (SPAN RATING 48/24) AT EXTERIOR; PROVIDE APPROVED GALVANIZED STEEL FASTENERS AT HEAD, JAMBS AND SILLS. THE WEATHER-TIGHT WINDOW OPENING ENCLOSURE ASSEMBLY SHALL BE DESIGNED TO WITHSTAND 'DESIGN AND WIND PRESSURE' AS DETERMINED IN STRICT ACCORDANCE WITH ASCE 7-98 AND THE CONTRACTOR MUST RETAIN A LICENSED NEW YORK STATE PROFESSIONAL ENGINEER TO DESIGN/ANALYZE THE WEATHER-TIGHT ENCLOSURE ASSEMBLY PRIOR TO ANY FABRICATION. SUBMIT TO OGS FOR APPROVAL THE FOLLOWING: SEALED AND SIGNED SHOP DRAWINGS BY A LICENSED NYS PE. THE SHOP DRAWINGS MUST BE APPROVED BY OGS DESIGN PRIOR TO ANY FABRICATION AND/OR INSTALLATION OF THESE WEATHER-TIGHT ENCLOSURE ASSEMBLIES. THESE SHOP DRAWINGS SHALL INCLUDE ALL THE NECESSARY ITEMS TO COMPLETE THE ASSEMBLY, SUCH AS, BUT NOT LIMITED TO: STUD SIZE AND SPACING; SHEATHING REQUIREMENTS; FASTENER TYPES, DIAMETER AND SPACING; FASTENER EMBEDMENT REQUIREMENTS; NUTS, BOLTS AND WASHERS – ANY AND/OR ALL NECESSARY APPURTENANCES REQUIRED TO COMPLETE THE WORK.

NYS OFFICE OF GENERAL SERVICES
Serving New York

ANDREW M. CUOMO
Governor
ROANN M. DESTITO
Commissioner
JAMES M. DAVIES, A.I.A.
Deputy Commissioner, Design and Construction

CONSULTANT

KEY PLAN

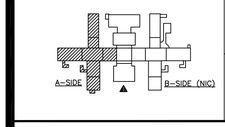

WARNING:
THE ALTERATION OF THIS MATERIAL IN ANY WAY, UNLESS DONE UNDER THE DIRECTION OF A COMPARABLE PROFESSIONAL, I.E. ARCHITECT FOR AN ARCHITECT, ENGINEER FOR AN ENGINEER OR LANDSCAPE ARCHITECT FOR A LANDSCAPE ARCHITECT, IS A VIOLATION OF THE NEW YORK STATE EDUCATION LAW AND/OR REGULATIONS AND IS A CLASS 'A' MISDEMEANOR.

REGISTERED ARCHITECT DAVID W. MILLER 026863 STATE OF NEW YORK

CONTRACT:
CONSTRUCTION

TITLE:
ASBESTOS REMOVAL, DEMOLITION, AND REPLACE WINDOWS
DUNLAP BUILDING NO. 102, A-SIDE

LOCATION:
MANHATTAN PSYCHIATRIC CENTER
600 E. 125th STREET
WARDS ISLAND, NY 10035

CLIENT:
OFFICE OF MENTAL HEALTH

"REVISED DRAWING 12/26/2012"

MARK	DATE	DESCRIPTION
FINAL	10/3/2012	BID DOCUMENT

PROJECT NUMBER:	Q0763 – C
DESIGNED BY:	DWM
DRAWN BY:	SL, DWM, R. PLANTE
FIELD CHECK:	OGS
APPROVED:	DWM

SHEET TITLE:
WINDOW DETAILS

DRAWING NUMBER:
A-502

SHEET 50 OF 56

Jan 02,2013 – 2:37pm
V:\Designers\Const\p007xx\q0763\CadArch\A-502_Q0763_Rev-Add4.dwg
36x24 PLOT SHEET

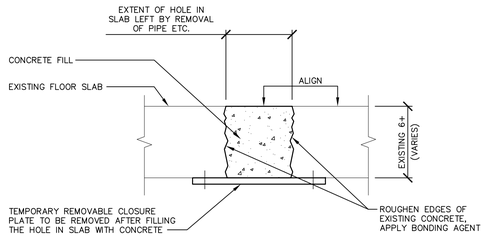

NOTE: REFER TO FIRESTOPPING SCHEDULE THIS SHEET

1 A-503 TYPICAL FLOOR HOLE CLOSURE DETAIL
SCALE: 3" = 1'-0"

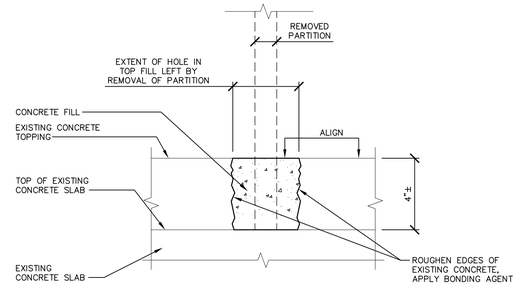

QUANTITY: OCCURS AT ALL (100 PERCENT) OF EXISTING PARTITIONS REMOVALS

2 A-503 TYPICAL SECTION – FLOOR PATCHING DUE TO PARTITION REMOVAL
SCALE: 3" = 1'-0"

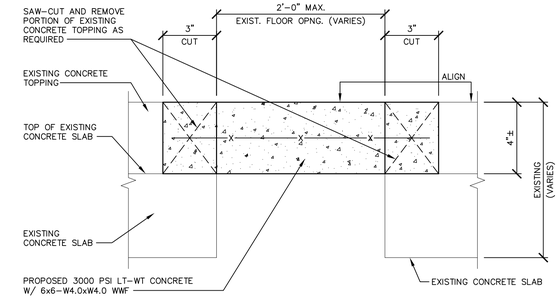

3 A-503 TYPICAL CLOSURE DETAIL FOR EXISTING OPENINGS
SCALE: 3" = 1'-0"

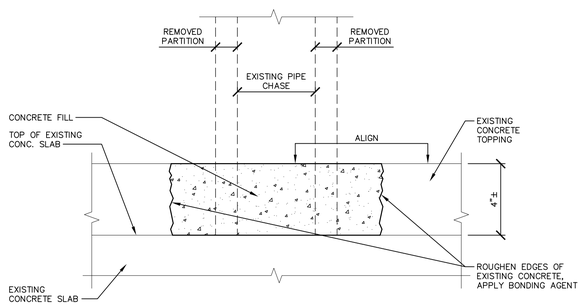

QUANTITY: OCCURS AT ALL (100 PERCENT) OF EXISTING PARTITIONS REMOVALS ENCLOSING EXISTING PIPE CHASES

4 A-503 TYPICAL FLOOR HOLE CLOSURE DETAIL
SCALE: 3" = 1'-0"

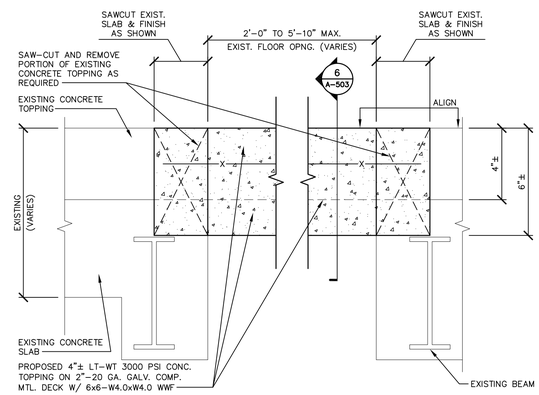

5 A-503 TYPICAL DUCT CHASE/FLOOR OPENING CLOSURE DETAIL
SCALE: 3" = 1'-0"

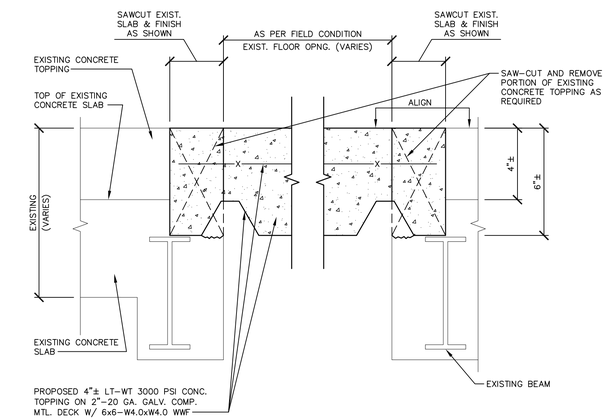

6 A-503 SECTION
SCALE: 3" = 1'-0"

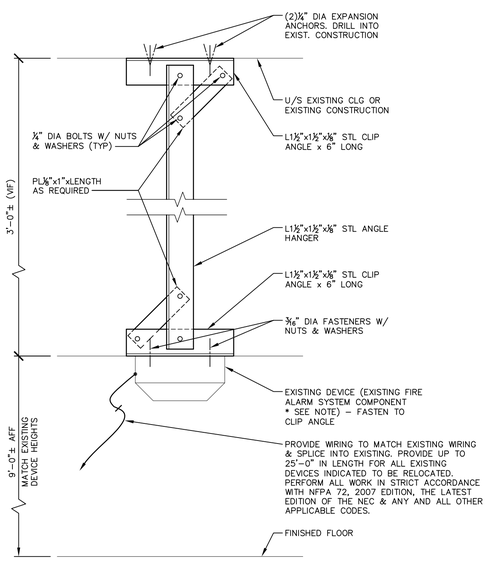

* NOTE:
EXISTING FIRE ALARM SYSTEM COMPONENTS:
EXISTING DEVICE SHOWN IS A SMOKE DETECTOR. RELOCATE ALL EXISTING DEVICES AS INDICATED ON DRAWING NUMBERS: A-101 THROUGH A-111, INCLUSIVE. EXISTING DEVICES TO BE RELOCATED ARE, BUT NOT LIMITED TO THE FOLLOWING; SMOKE DETECTORS, EMERGENCY LIGHTS, SPEAKER/STROBE LIGHTS, PULL STATIONS, EXIT SIGNS, ETC. REFER ALSO TO GENERAL NOTES – DEMOLITION, NOTE G8 ON DRAWING A-002.

7 A-503 DETAIL
SCALE: 3" = 1'-0"

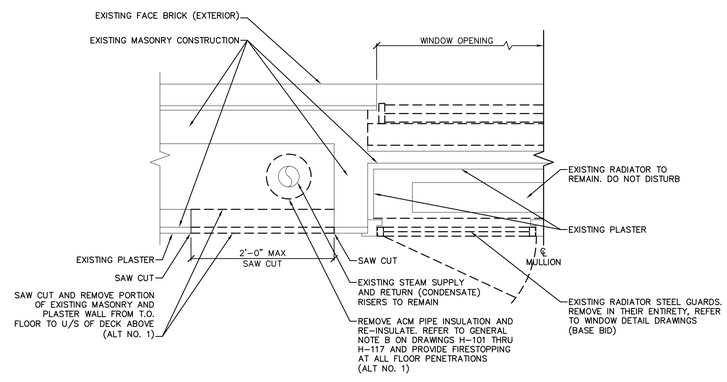

NOTES:
1. REFER ALSO TO DRAWING NUMBERS H-101 THRU H-117 FOR ALL LOCATIONS/QUANTITIES OF THIS WORK AND SECTION 1/H-103 AND DETAIL 1/H-103.
2. EXISTING STEAM SUPPLY AND RETURN (CONDENSATE) RISERS OCCUR AT EACH JAMB OF EACH WINDOW.

8 A-503 TYPICAL PLAN DETAIL – ALTERNATE NO.1
SCALE: 1" = 1'-0"

FIRESTOPPING SCHEDULE

FLOOR	PIPE SIZE (NOMINAL DIAMETER)		CONDUIT AND WIRE
	1"-3" DIA	LARGER THAN 3" DIA	
1	30	15	10
2	30	15	10
3	55	15	10
4	25	15	10
5 THRU 10	70 Ea./420 TOTAL	15 Ea./90 TOTAL	10 Ea./60 TOTAL
TOTALS	560	150	100

NOTES:
1. PROVIDE FIRESTOPPING FOR ALL (100 PERCENT) OF HOLES LEFT BY REMOVAL OF EXISTING PIPES, EXISTING CONDUITS, EXISTING WIRES, ETC. ALL FLOOR PENETRATION FIRESTOP ASSEMBLIES SHALL BE FOR A 2 HOUR FIRE RATED FLOOR. ALL WALL PENETRATION FIRESTOP ASSEMBLIES SHALL BE FOR A 3 HOUR FIRE RATED WALL.
2. WHERE IT IS MORE PRACTICAL TO DO SO: CLOSE OFF HOLE WITH CONCRETE FILL AS INDICATED AT DETAIL 1/A-503.
3. IMPORTANT NOTE: ALL QUANTITIES LISTED ON THE FIRESTOPPING SCHEDULE ARE ESTIMATES AND ARE FOR INFORMATION ONLY. THE CONTRACTOR IS RESPONSIBLE FOR PROVIDING FIRESTOPPING AT ALL HOLES LEFT BY REMOVAL OF EXISTING PIPE, EXISTING CONDUITS, EXISTING WIRES, ETC., WHETHER THEY ARE GREATER OR LESS THAN THE QUANTITIES LISTED ON THIS SCHEDULE OR ANYWHERE ELSE ON THE DRAWINGS OR IN THE SPECIFICATIONS.

REFERENCE DRAWING

NYS OFFICE OF GENERAL SERVICES
Serving New York
ANDREW M. CUOMO
Governor
ROANN M. DESTITO
Commissioner
JAMES M. DAVIES, A.I.A.
Deputy Commissioner, Design and Construction

CONSULTANT

KEY PLAN

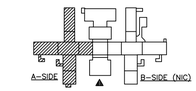

TRUE NORTH
PROJECT NORTH

WARNING:
THE ALTERATION OF THIS MATERIAL IN ANY WAY, UNLESS DONE UNDER THE DIRECTION OF A COMPARABLE PROFESSIONAL, I.E. ARCHITECT FOR AN ARCHITECT, ENGINEER FOR AN ENGINEER OR LANDSCAPE ARCHITECT FOR A LANDSCAPE ARCHITECT, IS A VIOLATION OF THE NEW YORK STATE EDUCATION LAW AND/OR REGULATIONS AND IS A CLASS 'A' MISDEMEANOR.

REGISTERED ARCHITECT DAVID W. MILLER 026863 STATE OF NEW YORK

CONTRACT:
CONSTRUCTION

TITLE:
ASBESTOS REMOVAL, DEMOLITION, AND REPLACE WINDOWS DUNLAP BUILDING NO. 102, A-SIDE

LOCATION:
MANHATTAN PSYCHIATRIC CENTER
600 E. 125th STREET
WARDS ISLAND, NY 10035

CLIENT:
OFFICE OF MENTAL HEALTH

"ADDENDUM DRAWING 12/26/2012"

MARK	DATE	DESCRIPTION
FINAL	10/3/2012	BID DOCUMENT

PROJECT NUMBER:	Q0763 – C
DESIGNED BY:	DWM
DRAWN BY:	SL, DWM
FIELD CHECK:	OGS
APPROVED:	DWM

SHEET TITLE:
MISCELLANEOUS DETAILS

DRAWING NUMBER:
A-503

SHEET 50 OF 56

Jan 02,2013 – 2:48pm
V:\Design\Consult\Q0763x\Q0763\CadArch\A-503_Q0763_Add4.dwg
36x24 PLOT SHEET

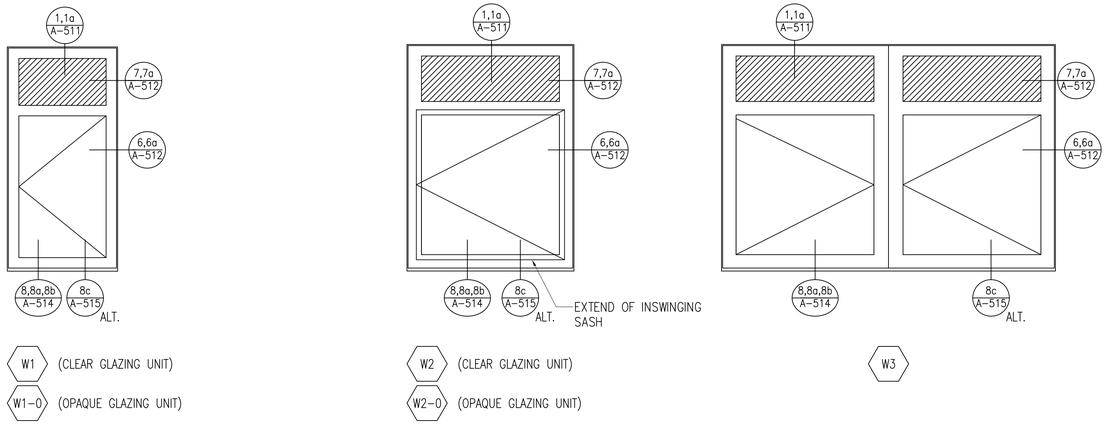

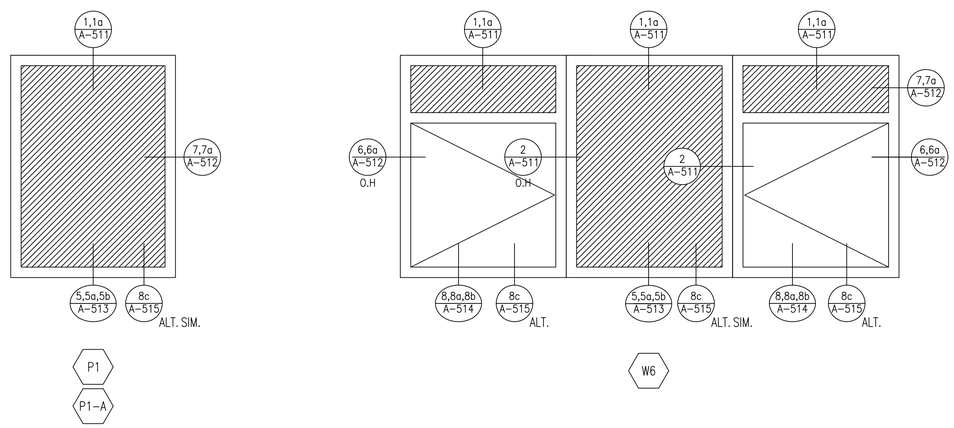

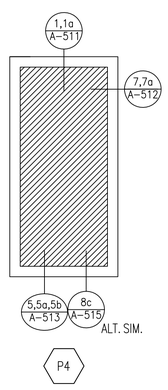

1 A-510 WINDOW TYPES
SCALE: 1/2" = 1'-0"

NOTES:

1. THIS DRAWING AND THE REFERENCED DETAILS ARE FOR THE REMEDIATION AND INSTALLATION WORK ASSOCIATED WITH WINDOW UNITS (FRAMES, PANELS, GLAZING AND BLINDS) THAT ARE FURNISHED BY OMH.
2. CONTRACTOR SHALL INSPECT ALL WINDOW UNITS THAT HAVE BEEN STORED ONSITE BY OMH PROVIDE REMEDIATION AND ADDITIONAL COMPONENTS FOR A COMPLETE INSTALLATION MEETING THE SPECIFICATION REQUIREMENTS.
3. THE WINDOW TYPES SHOWN CORRESPOND TO THE DESIGNATIONS FOR THE NEW WINDOWS TO BE FURNISHED BY THE CONTRACTOR. SEE DRAWING A-501/A-502 FOR ADDITIONAL INFORMATION.
4. THE WINDOW UNITS FURNISHED BY THE OMH DO NOT INCLUDE THE FRAMES FOR INSULATED PANELS, STARTER SILL, AND JAMB RECEPTORS SHOWN. THESE COMPONENTS AND ALL OTHER ACCESSORIES NEEDED FOR A COMPLETE INSTALLATION ARE THE RESPONSIBILITY OF THE CONTRACTOR.
5. THE CONTRACTOR SHALL PROVIDE A DESIGN FOR THE FRAMES FOR INSULATED PANELS, STARTER SILL AND JAMB RECEPTORS. THE PERFORMANCE (SEE SPECIFICATIONS) OF THE VENT WINDOW IN THE PROPOSED CONFIGURATION SHALL BE DEMONSTRATED BY TESTING.
6. STORED WINDOWS, FURNISHED BY OMH, SHALL BE INSTALLED AT THE SIXTEENTH FLOOR AND PROCEEDING DOWNWARD AND THE BASEMENT WHERE POSSIBLE.
7. THE CONTRACTOR WILL FIELD VERIFY ALL EXISTING WINDOW OPENING DIMENSIONS AND CONDITIONS AND PROVIDE A THOROUGH SET OF SHOP DRAWINGS FOR ALL WINDOW OPENINGS.
8. THE CONTRACTOR SHALL PROVIDE ANCHOR TESTING OF ALL PROPOSED FASTENERS IN ALL BUILDING SUBSTRATE TYPES AND PROVIDE ENGINEERING CALCULATIONS, PREPARED BY A PROFESSIONAL ENGINEER LICENSED IN NEW YORK, FOR ALL WINDOW ANCHORAGES.
9. REFERENCE DOCUMENT LOCATED IN THE APPENDIX OF THE PROJECT MANUAL: GLAZING INSPECTION AND INVENTORY. MANHATTAN PSYCHIATRIC CENTER.
10. SEE DRAWING A-501/A-502 FOR ADDITIONAL GENERAL NOTES AND DETAILS THAT APPLY TO ALL NEW AND EXISTING WINDOW INSTALLATIONS.

REFERENCE DRAWING

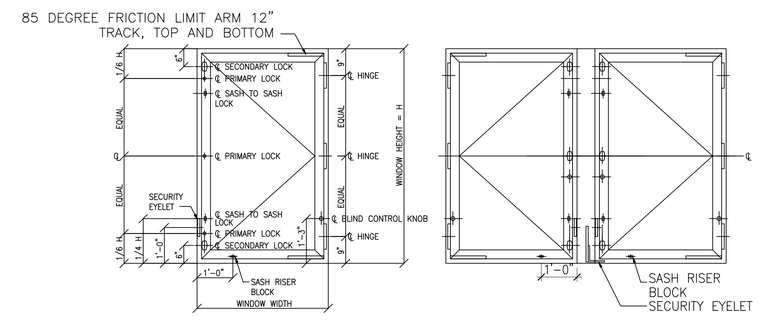

THREE FRICTION PIN LOCKS ARE SHOWN FOR THE INTERIOR SASH PRIMARY LOCKS.

2 A-510 WINDOW HARDWARE LAYOUT (FOR REFERENCE)
SCALE: N.T.S.

NYS OFFICE OF GENERAL SERVICES
Serving New York

ANDREW M. CUOMO
Governor
ROANN M. DESTITO
Commissioner
JAMES M. DAVIES, A.I.A.
Deputy Commissioner, Design and Construction

CONSULTANT

KEY PLAN
A-SIDE
B-SIDE (NIC)
TRUE NORTH
PROJECT NORTH

WARNING:
THE ALTERATION OF THIS MATERIAL IN ANY WAY, UNLESS DONE UNDER THE DIRECTION OF A COMPARABLE PROFESSIONAL, I.E. ARCHITECT FOR AN ARCHITECT, ENGINEER FOR AN ENGINEER OR LANDSCAPE ARCHITECT FOR A LANDSCAPE ARCHITECT, IS A VIOLATION OF THE NEW YORK STATE EDUCATION LAW AND/OR REGULATIONS AND IS A CLASS 'A' MISDEMEANOR.

REGISTERED ARCHITECT DAVID W. MILLER 026863 STATE OF NEW YORK

CONTRACT:
CONSTRUCTION

TITLE:
ASBESTOS REMOVAL, DEMOLITION, AND REPLACE WINDOWS
DUNLAP BUILDING NO. 102, A-SIDE

LOCATION:
MANHATTAN PSYCHIATRIC CENTER
600 E. 125th STREET
WARDS ISLAND, NY 10035

CLIENT:
OFFICE OF MENTAL HEALTH

"REVISED DRAWING 12/26/2012"

MARK	DATE	DESCRIPTION
FINAL	10/3/2012	BID DOCUMENT

PROJECT NUMBER:	Q0763 – C
DESIGNED BY:	DWM
DRAWN BY:	GMS, SL, DWM
FIELD CHECK:	OGS
APPROVED:	DWM

SHEET TITLE:
WINDOW TYPES AND ELEVATIONS–REMEDIATION (REFURBISHMENT)

DRAWING NUMBER:
A–510

SHEET 51 OF 56

Jan 02,2013 – 2:51pm
V:\Designed\Const\p2007xx\x0763\Cadkrch\A-510_00763_Rev-Add4.dwg
36x24 PLOT SHEET

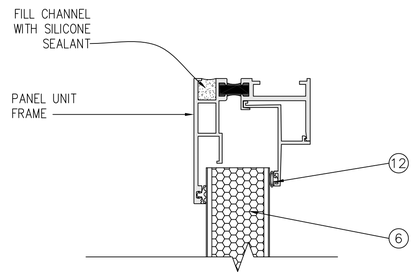

1 A-511 PANEL UNIT HEAD
SCALE: 6" = 1'-0"

KEY NOTES:

1. EXTRUDED ALUMINUM DOUBLE IN-SWING CASEMENT WINDOW UNIT
2. ¼" TYPE 'D' GLASS
3. ½" TYPE 'S-1' GLASS
4. INTEGRAL VENETIAN BLINDS
5. NOT USED
6. METAL WINDOW PANEL – INSULATED – 1¾" THICK
7. NOT USED
8. ALUM. ANCHOR (ENGINEERED BY CONTRACTOR)
9. FULL DEPTH SHIM, AS REQUIRED
10. BACKER ROD & SEALANT
11. SEALANT
12. NEOPRENE GASKET
13. EXISTING LINTEL
14. EXISTING BRICK
15. TYPE 1 SEALANT
16. WEEP HOLE/BAFFLE
17. WINDOW ANCHOR (CONTRACTOR TO SUBMIT ENGINEERING FOR APPROVAL)
18. ALUMINUM SUBSILL
19. SILL SUPPORT
20. FLASHING – RUBBERIZED ASPHALT "PEEL AND STICK"
21. EXISTING CONCRETE/MASONRY (V.I.F)
22. NOT USED
23. NOT USED
24. REMOVE EXISTING PLASTER TO ATTACH WINDOW ANCHORS DIRECTLY TO MASONRY
25. NOT USED
26. BACKER ROD & TYPE 1 SEALANT

AT ALL EXISTING STEEL LINTELS – ALL EXISTING STEEL LINTEL SURFACES EXPOSED AFTER REMOVAL OF EXISTING WINDOWS PREPARE AND PAINT AS FOLLOWS, PRIOR TO INSTALLATION OF REPLACEMENT WINDOWS: PREPARE EXISTING EXPOSED SURFACES OF EXISTING STEEL LINTELS IN ACCORDANCE WITH STANDARD SSPC-SP3; PRIME WITH PAINT TYPE ESP; APPLY FINISH PAINT MANUFACTURER'S RECOMMENDED COLD GALVANIZING COMPOUND OVER PAINT TYPE ESP; FINISH PAINT WITH PAINT TYPE EAL-3.

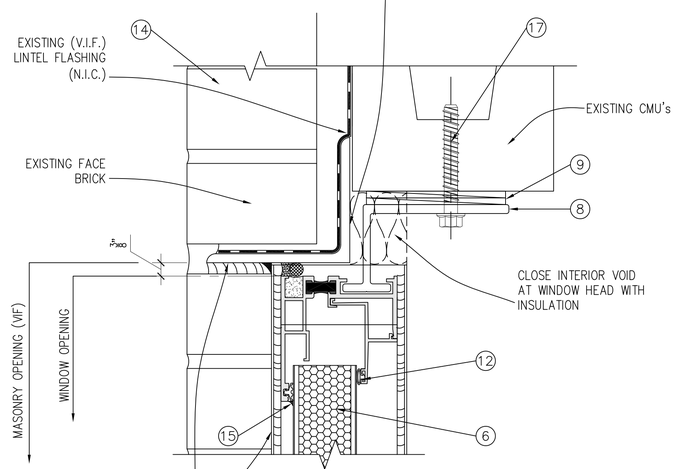

AT ALL EXISTING STEEL LINTELS – ALL EXISTING STEEL LINTEL SURFACES EXPOSED AFTER REMOVAL OF EXISTING WINDOWS PREPARE AND PAINT AS FOLLOWS, PRIOR TO INSTALLATION OF REPLACEMENT WINDOWS: PREPARE EXISTING EXPOSED SURFACES OF EXISTING STEEL LINTELS IN ACCORDANCE WITH STANDARD SSPC-SP3; PRIME WITH PAINT TYPE ESP; APPLY FINISH PAINT MANUFACTURER'S RECOMMENDED COLD GALVANIZING COMPOUND OVER PAINT TYPE ESP; FINISH PAINT WITH PAINT TYPE EAL-3.

JAMB RECEPTOR BEYOND

1a A-511 INSTALLATION HEAD DETAIL
SCALE: 6" = 1'-0"

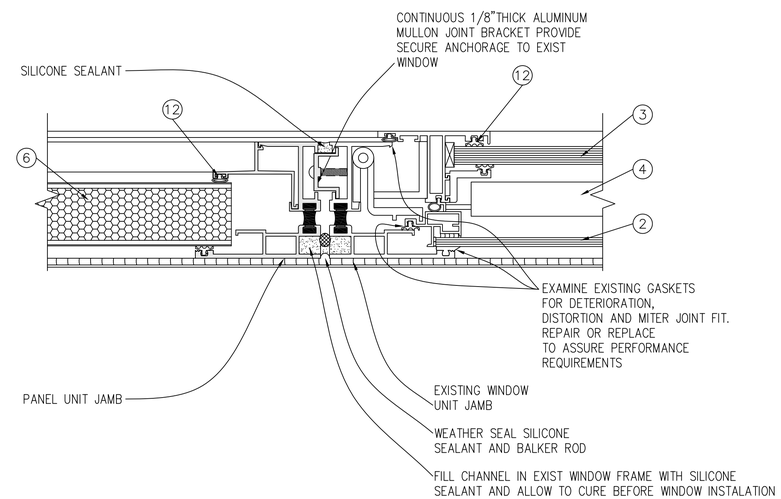

2 A-511 VERTICAL MULLION DETAIL
SCALE: 6" = 1'-0"

REFERENCE DRAWING

NYS OFFICE OF GENERAL SERVICES
Serving New York

ANDREW M. CUOMO
Governor
ROANN M. DESTITO
Commissioner
JAMES M. DAVIES, A.I.A.
Deputy Commissioner, Design and Construction

CONSULTANT

KEY PLAN

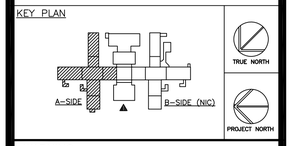

WARNING:
THE ALTERATION OF THIS MATERIAL IN ANY WAY, UNLESS DONE UNDER THE DIRECTION OF A COMPARABLE PROFESSIONAL, I.E. ARCHITECT FOR AN ARCHITECT, ENGINEER FOR AN ENGINEER OR LANDSCAPE ARCHITECT FOR A LANDSCAPE ARCHITECT, IS A VIOLATION OF THE NEW YORK STATE EDUCATION LAW AND/OR REGULATIONS AND IS A CLASS 'A' MISDEMEANOR.

REGISTERED ARCHITECT DAVID W. MILLER 026863 STATE OF NEW YORK

CONTRACT:
CONSTRUCTION

TITLE:
ASBESTOS REMOVAL, DEMOLITION, AND REPLACE WINDOWS
DUNLAP BUILDING NO. 102, A-SIDE

LOCATION:
MANHATTAN PSYCHIATRIC CENTER
600 E. 125th STREET
WARDS ISLAND, NY 10035

CLIENT:
OFFICE OF MENTAL HEALTH

"REVISED DRAWING 12/26/2012"

MARK	DATE	DESCRIPTION
FINAL	10/3/2012	BID DOCUMENT

PROJECT NUMBER:	Q0763 – C
DESIGNED BY:	DWM
DRAWN BY:	GMS, SL, DWM
FIELD CHECK:	OGS
APPROVED:	DWM

SHEET TITLE:
WINDOW DETAILS

DRAWING NUMBER:
A-511

SHEET 52 OF 56

Jan 02,2013 – 5:38am
V:\Design\ndCom\q0763\x\q0763\CadArch\A-511_Q0763_Rev-Add4.dwg
36x24 PLOT SHEET

KEY NOTES:

1. EXTRUDED ALUMINUM DOUBLE IN-SWING CASEMENT WINDOW UNIT
2. ¼" TYPE 'D' GLASS
3. ½" TYPE 'S-1' GLASS
4. INTEGRAL VENETIAN BLINDS
5. NOT USED
6. METAL WINDOW PANEL – INSULATED – 1¾" THICK
7. NOT USED
8. ALUM. ANCHOR (ENGINEERED BY CONTRACTOR)
9. FULL DEPTH SHIM, AS REQUIRED
10. BACKER ROD & SEALANT
11. SEALANT
12. NEOPRENE GASKET
13. EXISTING LINTEL
14. EXISTING BRICK
15. TYPE 1 SEALANT
16. WEEP HOLE/BAFFLE
17. WINDOW ANCHOR (CONTRACTOR TO SUBMIT ENGINEERING FOR APPROVAL)
18. ALUMINUM SUBSILL
19. SILL SUPPORT
20. FLASHING – RUBBERIZED ASPHALT "PEEL AND STICK"
21. EXISTING CONCRETE/MASONRY (V.I.F)
22. NOT USED
23. NOT USED
24. REMOVE EXISTING PLASTER TO ATTACH WINDOW ANCHORS DIRECTLY TO MASONRY
25. NOT USED
26. BACKER ROD & TYPE 1 SEALANT

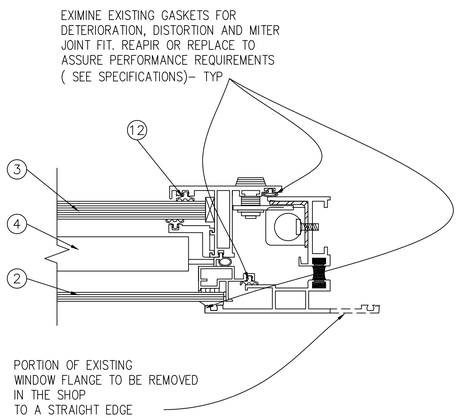

6 / A-512 WINDOW UNIT JAMB
SCALE: 6" = 1'-0"

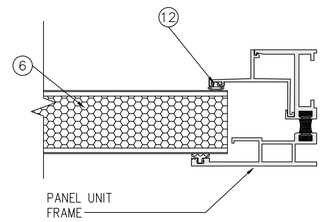

7 / A-512 PANEL UNIT JAMB
SCALE: 6" = 1'-0"

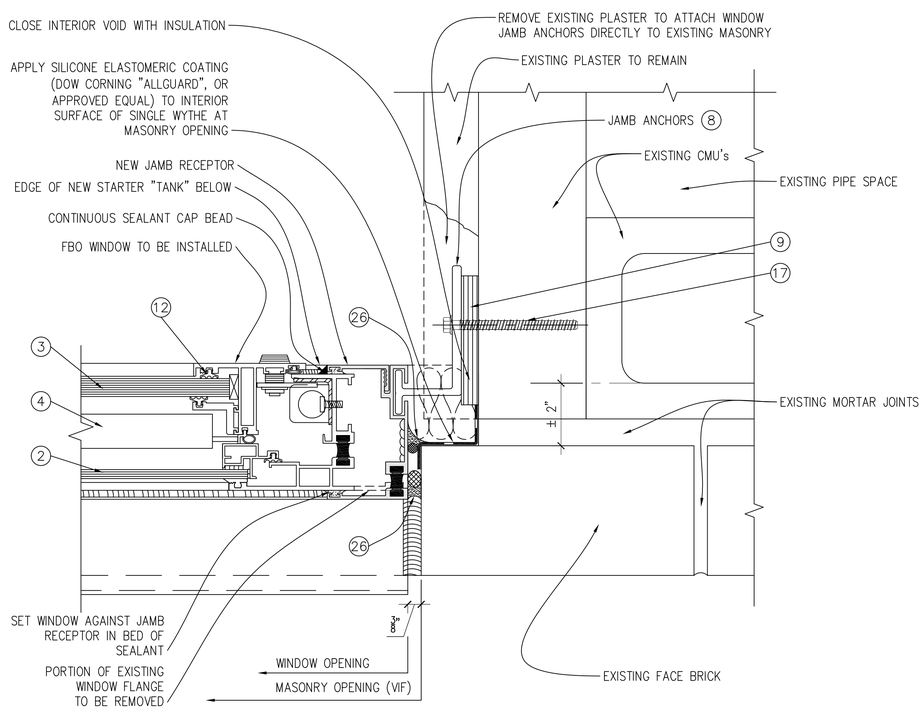

6a / A-512 INSTALLATION JAMB DETAIL
SCALE: 6" = 1'-0"

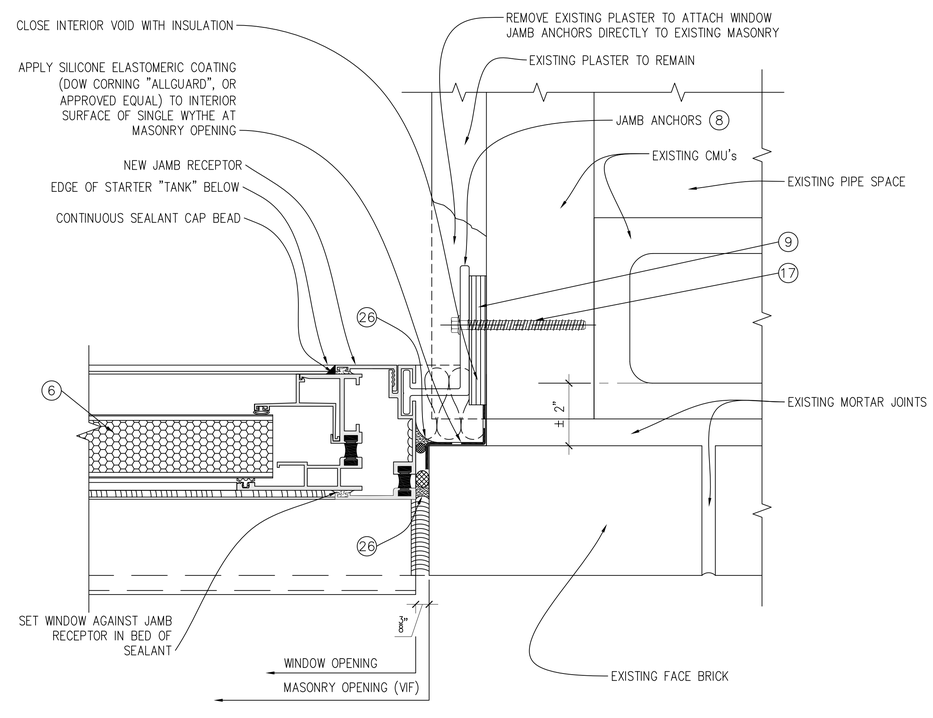

7a / A-512 INSTALLATION JAMB DETAIL
SCALE: 6" = 1'-0"

REFERENCE DRAWING

NYS OFFICE OF GENERAL SERVICES
Serving New York

ANDREW M. CUOMO
Governor
ROANN M. DESTITO
Commissioner
JAMES M. DAVIES, A.I.A.
Deputy Commissioner, Design and Construction

CONSULTANT

KEY PLAN

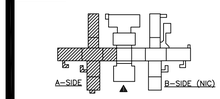

TRUE NORTH
PROJECT NORTH

WARNING:
THE ALTERATION OF THIS MATERIAL IN ANY WAY, UNLESS DONE UNDER THE DIRECTION OF A COMPARABLE PROFESSIONAL, I.E. ARCHITECT FOR AN ARCHITECT, ENGINEER FOR AN ENGINEER OR LANDSCAPE ARCHITECT FOR A LANDSCAPE ARCHITECT, IS A VIOLATION OF THE NEW YORK STATE EDUCATION LAW AND/OR REGULATIONS AND IS A CLASS 'A' MISDEMEANOR.

REGISTERED ARCHITECT DAVID W. MILLER 026832 STATE OF NEW YORK

CONTRACT:
CONSTRUCTION

TITLE:
ASBESTOS REMOVAL, DEMOLITION, AND REPLACE WINDOWS
DUNLAP BUILDING NO. 102, A-SIDE

LOCATION:
MANHATTAN PSYCHIATRIC CENTER
600 E. 125th STREET
WARDS ISLAND, NY 10035

CLIENT:
OFFICE OF MENTAL HEALTH

"REVISED DRAWING 12/26/2012"

MARK	DATE	DESCRIPTION
FINAL	10/3/2012	BID DOCUMENT

PROJECT NUMBER:	Q0763 – C
DESIGNED BY:	DWM
DRAWN BY:	GMS, DWM, SL
FIELD CHECK:	OGS
APPROVED:	DWM

SHEET TITLE:
WINDOW DETAILS

DRAWING NUMBER:
A-512

SHEET 53 OF 56

Jan 02,2013 – 3:01pm
V:\Design\Const\Q0763\Cad\Arch\A-512_Q0763_Rev-Add4.dwg
36x24 PLOT SHEET

NOTES:

1. AT EXISTING WINDOW SILL MASONRY, REMOVE MATERIAL DOWN TO TOP OF THE HOLLOW CMU. REPLACE MASONRY AS SHOWN UP TO THE OUTER WYTHE LEVEL.

2. THE OVERALL M.O. HEIGHT MAY NOT BE SUFFICIENT FOR INSTALLATION WITH A SINGLE PIECE SUBSILL STARTER, IF THIS IS CONFIRMED IN THE CONTRACTOR SURVEYS OF THE WINDOW UNITS AND THE BUILDING CONDITIONS, A TWO PIECE SUBSILL MAY BE REQUIRED FOR INSTALLATION CLEARANCES (SEE 8c/A–515).

RPW AT ALL EXISTING WINDOW OPENINGS TO RECEIVE WINDOW REPLACEMENT– BASEMENT FLOOR AND FIRST (1ST) FLOOR THROUGH SIXTEENTH (16TH) FLOORS, INCLUSIVE: REMOVE EXISTING INTERIOR WYTHE OF EXISTING EXTERIOR WALL ASSEMBLY WHICH CONSISTS OF 3"± THICK CMU WITH PLASTER FINISH (4"± TOTAL THICKNESS). REMOVE ALL THIS EXISTING INTERIOR WYTHE ASSEMBLY (INCLUDING ALL EXISTING BASE MATERIAL WHERE APPLICABLE) FROM EXISTING WINDOW JAMB TO EXISTING WINDOW JAMB, FROM TOP OF EXISTING FINISH FLOOR TO TOP OF EXISTING WINDOW STOOL, REMOVE ALL OF THE EXISTING STEEL SECURITY RADIATOR COVER ASSEMBLIES IN THEIR ENTIRETIES. REMOVE ALL EXISTING WINDOW STOOLS. AT ALL EXISTING WINDOW JAMB RETURNS: REMOVE THOSE PORTIONS OF THE EXISTING INTERIOR WYTHE OF EXISTING EXTERIOR WALL ASSEMBLY CONSISTING OF CMU'S AND PLASTER (SEE ABOVE) THAT NEED TO BE REMOVED TO INSTALL THE WINDOW CLIPS. SEE ALSO DRAWING NUMBERS: A–501, A–502, A–510, A–511, A–512, A–513, A–514 AND A–515 FOR DETAILED INFORMATION.

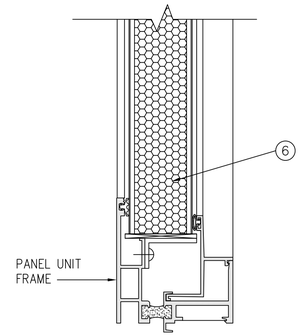

5 / A–513 WINDOW UNIT SILL
SCALE: 6" = 1'–0"

KEY NOTES:

1. EXTRUDED ALUMINUM DOUBLE IN–SWING CASEMENT WINDOW UNIT
2. ¼" TYPE 'D' GLASS
3. ½" TYPE 'S–1' GLASS
4. INTEGRAL VENETIAN BLINDS
5. NOT USED
6. METAL WINDOW PANEL – INSULATED – 1¾" THICK
7. NOT USED
8. ALUM. ANCHOR (ENGINEERED BY CONTRACTOR)
9. FULL DEPTH SHIM, AS REQUIRED
10. BACKER ROD & SEALANT
11. SEALANT
12. NEOPRENE GASKET
13. EXISTING LINTEL
14. EXISTING BRICK
15. TYPE 1 SEALANT
16. WEEP HOLE/BAFFLE
17. WINDOW ANCHOR (CONTRACTOR TO SUBMIT ENGINEERING FOR APPROVAL)
18. ALUMINUM SUBSILL
19. SILL SUPPORT
20. FLASHING – RUBBERIZED ASPHALT "PEEL AND STICK"
21. EXISTING CONCRETE/MASONRY (V.I.F)
22. NOT USED
23. NOT USED
24. REMOVE EXISTING PLASTER TO ATTACH WINDOW ANCHORS DIRECTLY TO MASONRY
25. NOT USED
26. BACKER ROD & TYPE 1 SEALANT

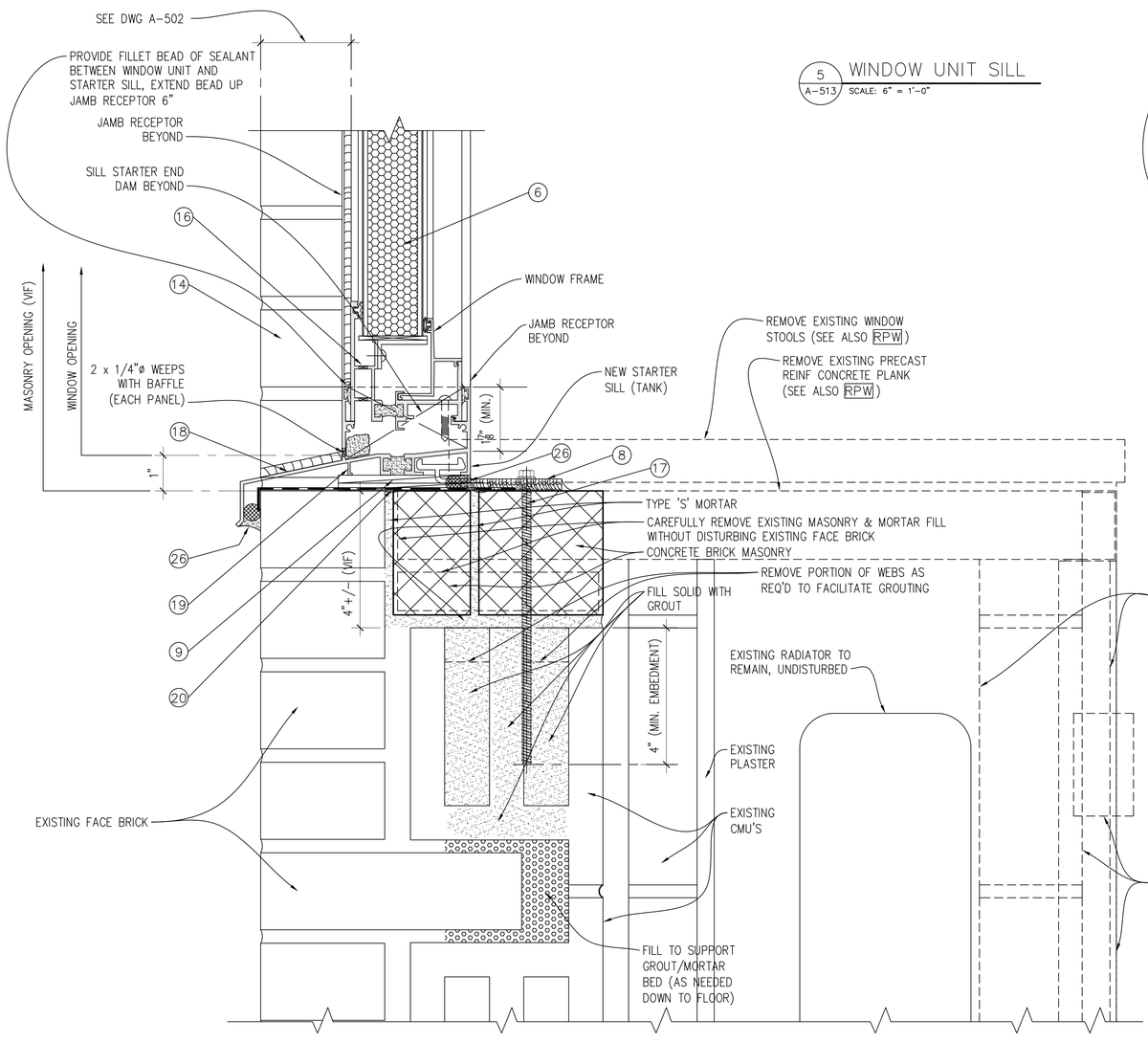

5a / A–513 INSTALLATION STARTER SILL DETAIL (BRICK)
SCALE: 6" = 1'–0"

REFERENCE DRAWING

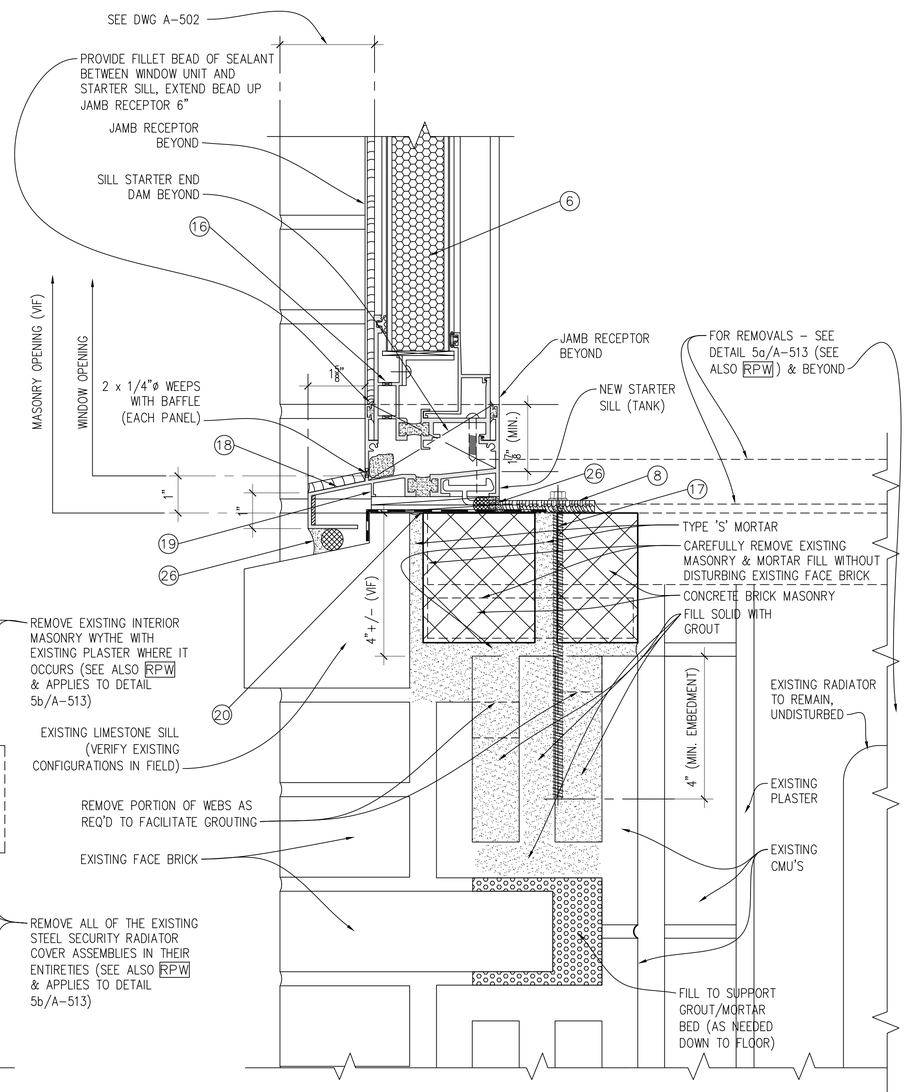

5b / A–513 INSTALLATION SILL STARTER DETAIL (LIMESTONE)
SCALE: 6" = 1'–0"

NYS OFFICE OF GENERAL SERVICES
Serving New York

ANDREW M. CUOMO
Governor
ROANN M. DESTITO
Commissioner
JAMES M. DAVIES, A.I.A.
Deputy Commissioner, Design and Construction

CONSULTANT

KEY PLAN

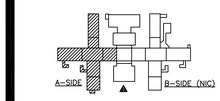

TRUE NORTH
PROJECT NORTH

WARNING:
THE ALTERATION OF THIS MATERIAL IN ANY WAY, UNLESS DONE UNDER THE DIRECTION OF A COMPARABLE PROFESSIONAL, I.E. ARCHITECT FOR AN ARCHITECT, ENGINEER FOR AN ENGINEER OR LANDSCAPE ARCHITECT FOR A LANDSCAPE ARCHITECT, IS A VIOLATION OF THE NEW YORK STATE EDUCATION LAW AND/OR REGULATIONS AND IS A CLASS 'A' MISDEMEANOR.

REGISTERED ARCHITECT DAVID W. MILLER 026863 STATE OF NEW YORK

CONTRACT:
CONSTRUCTION

TITLE:
ASBESTOS REMOVAL, DEMOLITION, AND REPLACE WINDOWS
DUNLAP BUILDING NO. 102, A–SIDE

LOCATION:
MANHATTAN PSYCHIATRIC CENTER
600 E. 125th STREET
WARDS ISLAND, NY 10035

CLIENT:
OFFICE OF MENTAL HEALTH

"REVISED DRAWING 12/26/2012"

MARK	DATE	DESCRIPTION
FINAL	10/3/2012	BID DOCUMENT

PROJECT NUMBER:	Q0763 – C
DESIGNED BY:	DWM
DRAWN BY:	GMS, DWM, SL
FIELD CHECK:	OGS
APPROVED:	DWM

SHEET TITLE:
WINDOW DETAILS

DRAWING NUMBER:
A–513

SHEET 54 OF 56

Jan 02,2013 – 5:45am
V:\Designs\Dorsett\Q0763\Cad\Arch\A-513_Q0763_Rev-Add4.dwg
36x24 PLOT SHEET

NOTES:

1. AT EXISTING WINDOW SILL MASONRY, REMOVE MATERIAL DOWN TO TOP OF THE HOLLOW CMU. REPLACE MASONRY AS SHOWN UP TO THE OUTER WYTHE LEVEL.

2. THE OVERALL M.O. HEIGHT MAY NOT BE SUFFICIENT FOR INSTALLATION WITH A SINGLE PIECE SUBSILL STARTER, IF THIS IS CONFIRMED IN THE CONTRACTOR SURVEYS OF THE WINDOW UNITS AND THE BUILDING CONDITIONS, A TWO PIECE SUBSILL MAY BE REQUIRED FOR INSTALLATION CLEARANCES (SEE 8c/A-515).

RPW AT ALL EXISTING WINDOW OPENINGS TO RECEIVE WINDOW REPLACEMENT– BASEMENT FLOOR AND FIRST (1ST) FLOOR THROUGH SIXTEENTH (16TH) FLOORS, INCLUSIVE: REMOVE EXISTING INTERIOR WYTHE OF EXISTING EXTERIOR WALL ASSEMBLY WHICH CONSISTS OF 3"± THICK CMU WITH PLASTER FINISH (4"± TOTAL THICKNESS). REMOVE ALL THIS EXISTING INTERIOR WYTHE ASSEMBLY (INCLUDING ALL EXISTING BASE MATERIAL WHERE APPLICABLE) FROM EXISTING WINDOW JAMB TO EXISTING WINDOW JAMB, FROM TOP OF EXISTING FINISH FLOOR TO TOP OF EXISTING WINDOW STOOL, REMOVE ALL OF THE EXISTING STEEL SECURITY RADIATOR COVER ASSEMBLIES IN THEIR ENTIRETIES. REMOVE ALL EXISTING WINDOW STOOLS. AT ALL EXISTING WINDOW JAMB RETURNS: REMOVE THOSE PORTIONS OF THE EXISTING INTERIOR WYTHE OF EXISTING EXTERIOR WALL ASSEMBLY CONSISTING OF CMU'S AND PLASTER (SEE ABOVE) THAT NEED TO BE REMOVED TO INSTALL THE WINDOW CLIPS. SEE ALSO DRAWING NUMBERS: A-501, A-502, A-510, A-511, A-512, A-513, A-514 AND A-515 FOR DETAILED INFORMATION.

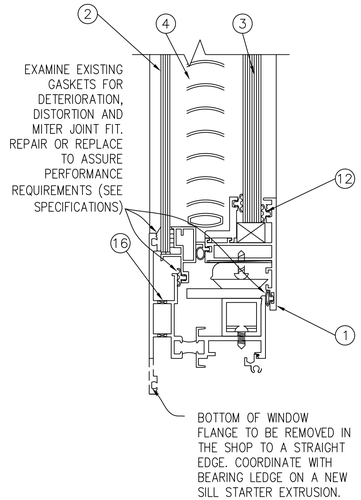

8 / A-514 WINDOW UNIT SILL
SCALE: 6" = 1'-0"

KEY NOTES:

1. EXTRUDED ALUMINUM DOUBLE IN-SWING CASEMENT WINDOW UNIT
2. ¼" TYPE 'D' GLASS
3. ½" TYPE 'S-1' GLASS
4. INTEGRAL VENETIAN BLINDS
5. NOT USED
6. METAL WINDOW PANEL – INSULATED – 1¾" THICK
7. NOT USED
8. ALUM. ANCHOR (ENGINEERED BY CONTRACTOR)
9. FULL DEPTH SHIM, AS REQUIRED
10. BACKER ROD & SEALANT
11. SEALANT
12. NEOPRENE GASKET
13. EXISTING LINTEL
14. EXISTING BRICK
15. TYPE 1 SEALANT
16. WEEP HOLE/BAFFLE
17. WINDOW ANCHOR (CONTRACTOR TO SUBMIT ENGINEERING FOR APPROVAL)
18. ALUMINUM SUBSILL
19. SILL SUPPORT
20. FLASHING – RUBBERIZED ASPHALT "PEEL AND STICK"
21. EXISTING CONCRETE/MASONRY (V.I.F)
22. NOT USED
23. NOT USED
24. REMOVE EXISTING PLASTER TO ATTACH WINDOW ANCHORS DIRECTLY TO MASONRY
25. NOT USED
26. BACKER ROD & TYPE 1 SEALANT

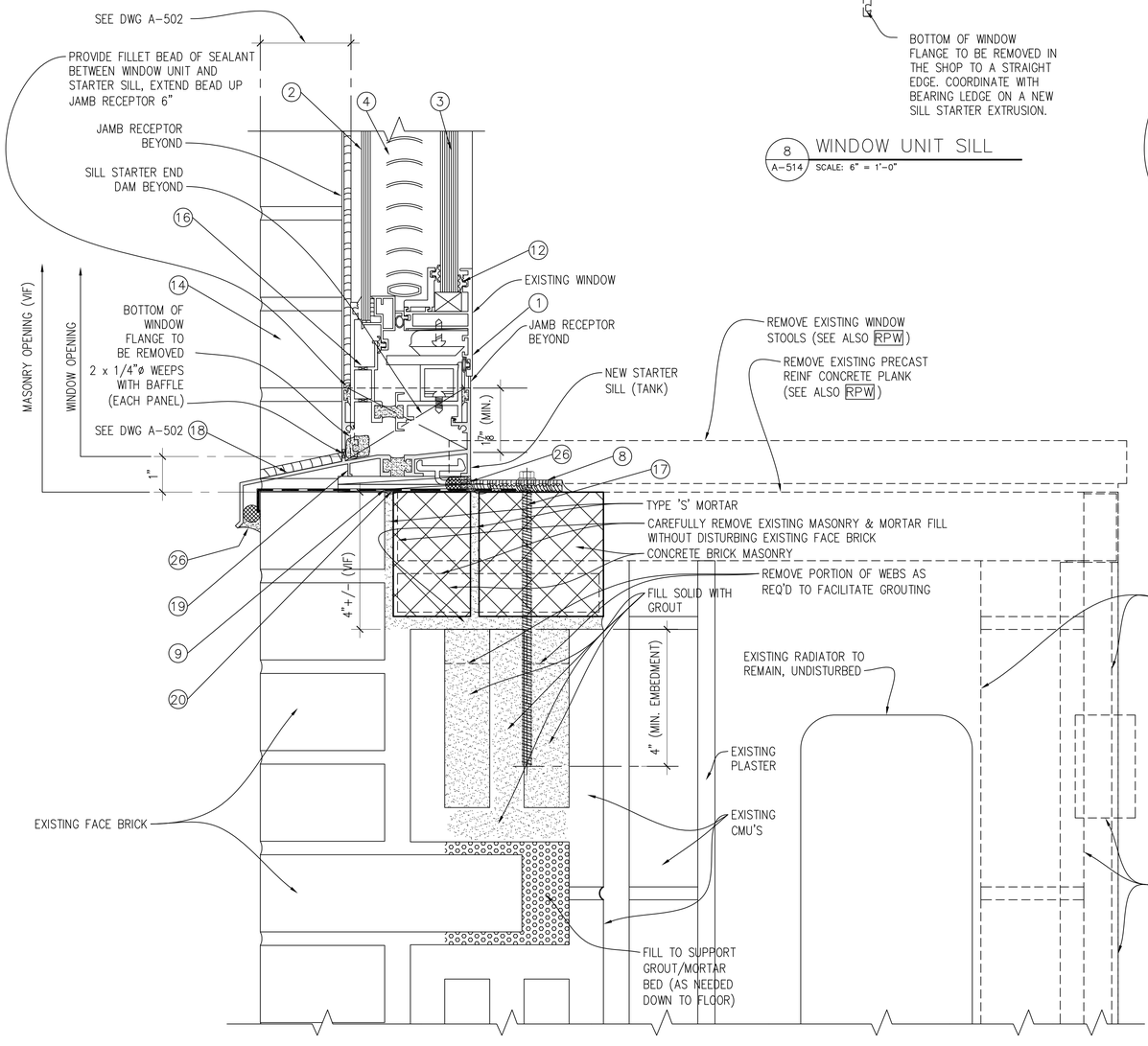

8a / A-514 INSTALLATION SILL STARTER DETAIL (BRICK)
SCALE: 6" = 1'-0"

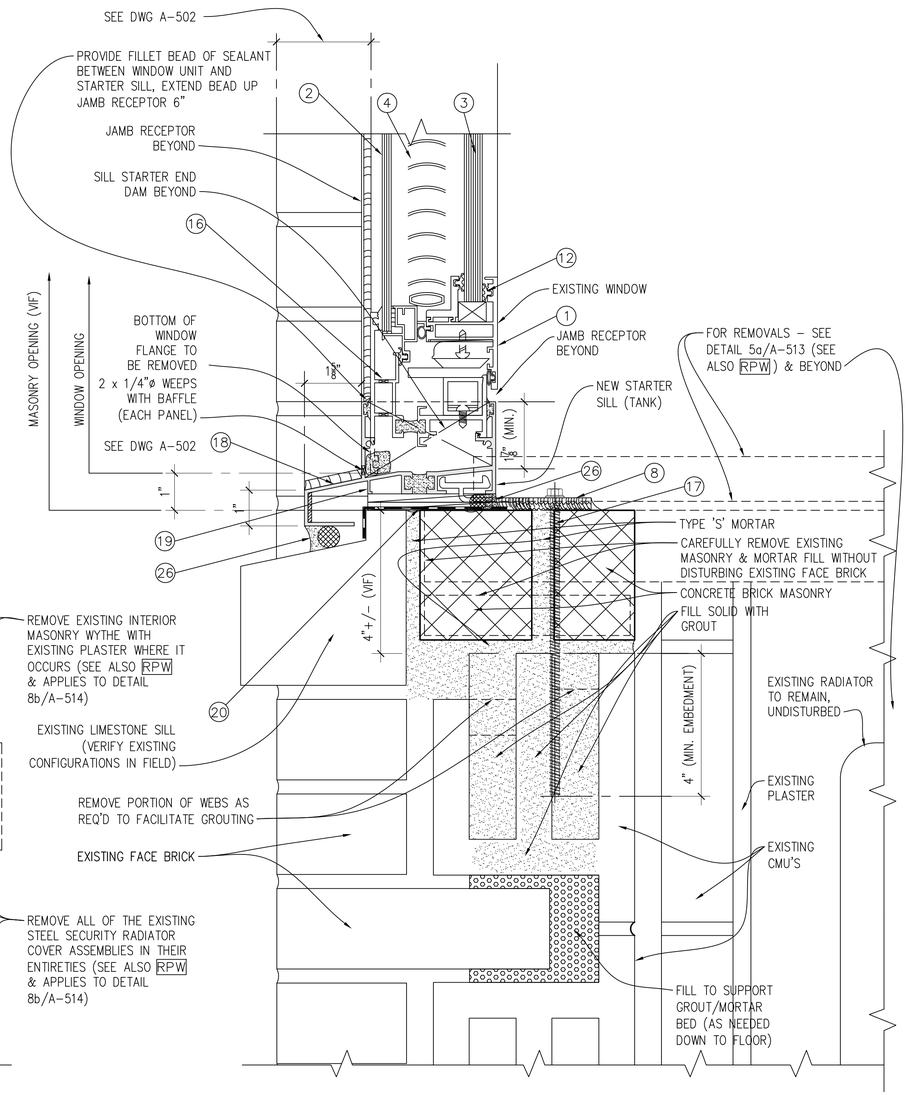

8b / A-514 INSTALLATION SILL STARTER DETAIL (LIMESTONE)
SCALE: 6" = 1'-0"

REFERENCE DRAWING

NYS OFFICE OF GENERAL SERVICES
Serving New York

ANDREW M. CUOMO
Governor
ROANN M. DESTITO
Commissioner
JAMES M. DAVIES, A.I.A.
Deputy Commissioner, Design and Construction

CONSULTANT

KEY PLAN

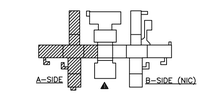

TRUE NORTH
PROJECT NORTH

WARNING:
THE ALTERATION OF THIS MATERIAL IN ANY WAY, UNLESS DONE UNDER THE DIRECTION OF A COMPARABLE PROFESSIONAL, I.E. ARCHITECT FOR AN ARCHITECT, ENGINEER FOR AN ENGINEER OR LANDSCAPE ARCHITECT FOR A LANDSCAPE ARCHITECT, IS A VIOLATION OF THE NEW YORK STATE EDUCATION LAW AND/OR REGULATIONS AND IS A CLASS 'A' MISDEMEANOR.

REGISTERED ARCHITECT DAVID W. MILLER 026832 STATE OF NEW YORK

CONTRACT:
CONSTRUCTION

TITLE:
ASBESTOS REMOVAL, DEMOLITION, AND REPLACE WINDOWS
DUNLAP BUILDING NO. 102, A-SIDE

LOCATION:
MANHATTAN PSYCHIATRIC CENTER
600 E. 125th STREET
WARDS ISLAND, NY 10035

CLIENT:
OFFICE OF MENTAL HEALTH

"REVISED DRAWING 12/26/2012"

MARK	DATE	DESCRIPTION
FINAL	10/3/2012	BID DOCUMENT

PROJECT NUMBER:	Q0763 – C
DESIGNED BY:	DWM
DRAWN BY:	GMS, DWM, SL
FIELD CHECK:	OGS
APPROVED:	DWM

SHEET TITLE:
WINDOW DETAILS

DRAWING NUMBER:
A-514

SHEET 55 OF 56

Jan 02,2013 – 5:56am
V:\Designfolders\q0763\Cad\Arch\A-514_Q0763_Rev-Add4.dwg
36x24 PLOT SHEET

NOTES:

1. AT EXISTING WINDOW SILL MASONRY, REMOVE MATERIAL DOWN TO TOP OF THE HOLLOW CMU. REPLACE MASONRY AS SHOWN UP TO THE OUTER WYTHE LEVEL.

2. THE OVERALL M.O. HEIGHT MAY NOT BE SUFFICIENT FOR INSTALLATION WITH A SINGLE PIECE SUBSILL STARTER, IF THIS IS CONFIRMED IN THE CONTRACTOR SURVEYS OF THE WINDOW UNITS AND THE BUILDING CONDITIONS, A TWO PIECE SUBSILL MAY BE REQUIRED FOR INSTALLATION CLEARANCES (SEE 8c/A–515).

RPW AT ALL EXISTING WINDOW OPENINGS TO RECEIVE WINDOW REPLACEMENT– BASEMENT FLOOR AND FIRST (1ST) FLOOR THROUGH SIXTEENTH (16TH) FLOORS, INCLUSIVE: REMOVE EXISTING INTERIOR WYTHE OF EXISTING EXTERIOR WALL ASSEMBLY WHICH CONSISTS OF 3"± THICK CMU WITH PLASTER FINISH (4"± TOTAL THICKNESS). REMOVE ALL THIS EXISTING INTERIOR WYTHE ASSEMBLY (INCLUDING ALL EXISTING BASE MATERIAL WHERE APPLICABLE) FROM EXISTING WINDOW JAMB TO EXISTING WINDOW JAMB, FROM TOP OF EXISTING FINISH FLOOR TO TOP OF EXISTING WINDOW STOOL, REMOVE ALL OF THE EXISTING STEEL SECURITY RADIATOR COVER ASSEMBLIES IN THEIR ENTIRETIES. REMOVE ALL EXISTING WINDOW STOOLS. AT ALL EXISTING WINDOW JAMB RETURNS: REMOVE THOSE PORTIONS OF THE EXISTING INTERIOR WYTHE OF EXISTING EXTERIOR WALL ASSEMBLY CONSISTING OF CMU'S AND PLASTER (SEE ABOVE) THAT NEED TO BE REMOVED TO INSTALL THE WINDOW CLIPS. SEE ALSO DRAWING NUMBERS: A–501, A–502, A–510, A–511, A–512, A–513, A–514 AND A–515 FOR DETAILED INFORMATION.

KEY NOTES:

1. EXTRUDED ALUMINUM DOUBLE IN–SWING CASEMENT WINDOW UNIT
2. ¼" TYPE 'D' GLASS
3. ½" TYPE 'S–1' GLASS
4. INTEGRAL VENETIAN BLINDS
5. NOT USED
6. METAL WINDOW PANEL – INSULATED – 1¾" THICK
7. NOT USED
8. ALUM. ANCHOR (ENGINEERED BY CONTRACTOR)
9. FULL DEPTH SHIM, AS REQUIRED
10. BACKER ROD & SEALANT
11. SEALANT
12. NEOPRENE GASKET
13. EXISTING LINTEL
14. EXISTING BRICK
15. TYPE 1 SEALANT
16. WEEP HOLE/BAFFLE
17. WINDOW ANCHOR (CONTRACTOR TO SUBMIT ENGINEERING FOR APPROVAL)
18. ALUMINUM SUBSILL
19. SILL SUPPORT
20. FLASHING – RUBBERIZED ASPHALT "PEEL AND STICK"
21. EXISTING CONCRETE/MASONRY (V.I.F)
22. NOT USED
23. NOT USED
24. REMOVE EXISTING PLASTER TO ATTACH WINDOW ANCHORS DIRECTLY TO MASONRY
25. NOT USED
26. BACKER ROD & TYPE 1 SEALANT

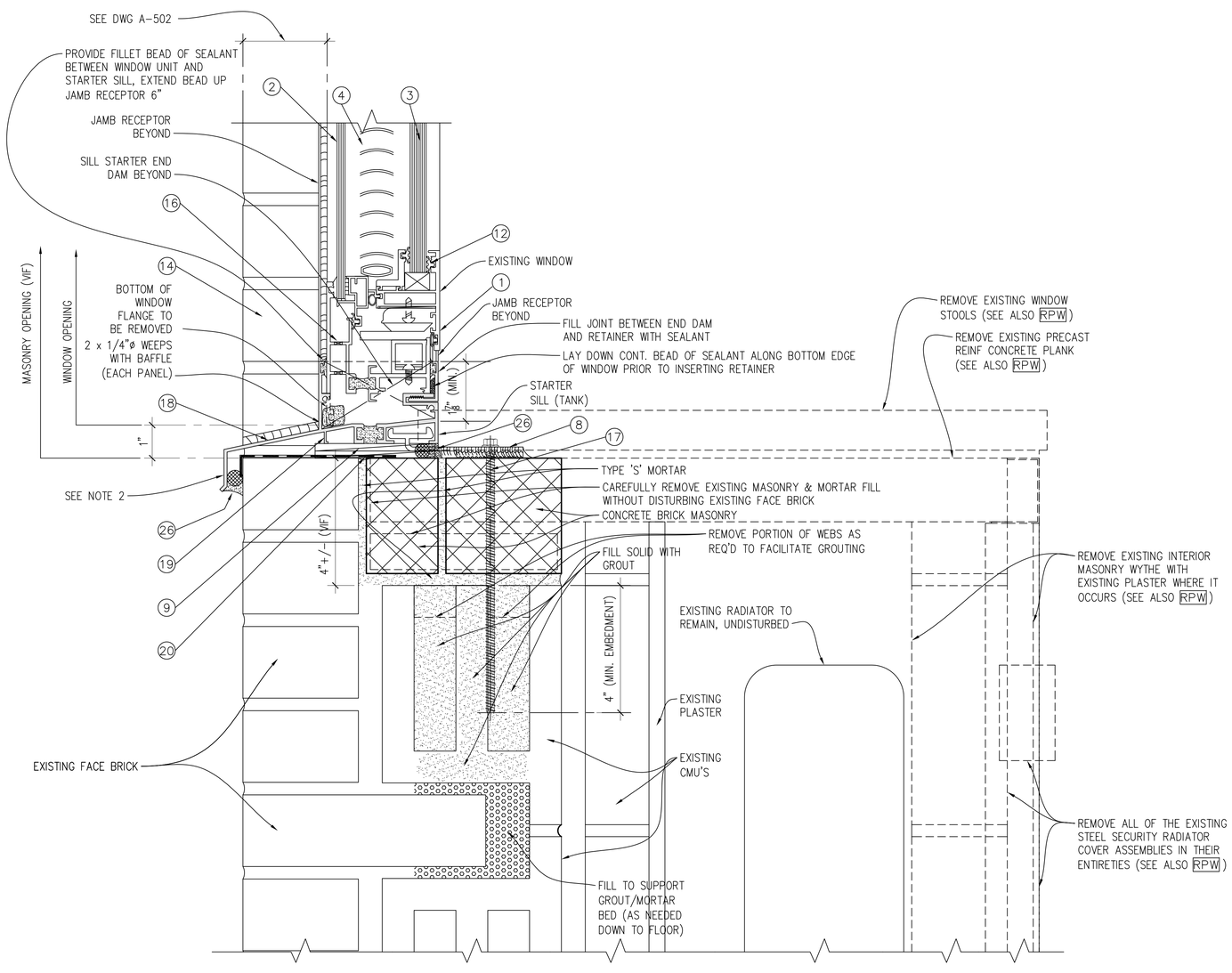

8c / A–515 ALTERNATE INSTALLATION SILL STARTER DETAIL
SCALE: 6" = 1'–0"

REFERENCE DRAWING

NYS OFFICE OF GENERAL SERVICES
Serving New York
ANDREW M. CUOMO, Governor
ROANN M. DESTITO, Commissioner
JAMES M. DAVIES, A.I.A., Deputy Commissioner, Design and Construction

CONSULTANT

KEY PLAN
A–SIDE B–SIDE (NIC)
TRUE NORTH
PROJECT NORTH

WARNING:
THE ALTERATION OF THIS MATERIAL IN ANY WAY, UNLESS DONE UNDER THE DIRECTION OF A COMPARABLE PROFESSIONAL, I.E. ARCHITECT FOR AN ARCHITECT, ENGINEER FOR AN ENGINEER OR LANDSCAPE ARCHITECT FOR A LANDSCAPE ARCHITECT, IS A VIOLATION OF THE NEW YORK STATE EDUCATION LAW AND/OR REGULATIONS AND IS A CLASS 'A' MISDEMEANOR.

REGISTERED ARCHITECT DAVID W. MILLER 026863 STATE OF NEW YORK

CONTRACT:
CONSTRUCTION

TITLE:
ASBESTOS REMOVAL, DEMOLITION, AND REPLACE WINDOWS DUNLAP BUILDING NO. 102, A–SIDE

LOCATION:
MANHATTAN PSYCHIATRIC CENTER
600 E. 125th STREET
WARDS ISLAND, NY 10035

CLIENT:
OFFICE OF MENTAL HEALTH

"REVISED DRAWING 12/26/2012"

MARK	DATE	DESCRIPTION
FINAL	10/3/2012	BID DOCUMENT

PROJECT NUMBER:	Q0763 – C
DESIGNED BY:	DWM
DRAWN BY:	GMS, DWM, SL
FIELD CHECK:	OGS
APPROVED:	DWM

SHEET TITLE:
WINDOW DETAILS

DRAWING NUMBER:
A–515

SHEET 56 OF 56

Jan 02,2013 – 6:00am
V:\Designs\Const\Q0763x\Q0763\CadArch\A–515_Q0763_Rev–Add4.dwg
36x24 PLOT SHEET

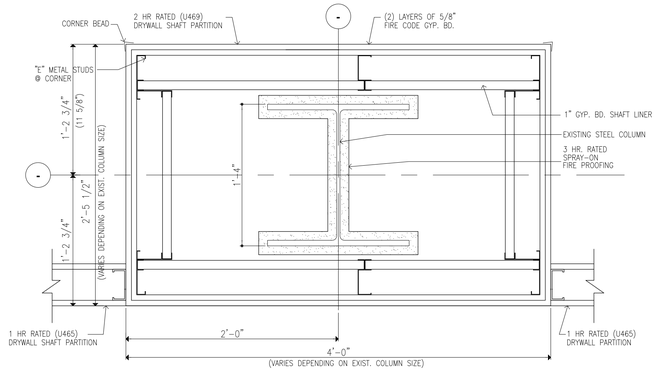

2 HR RATED COLUMN ENCLOSURE (U469) UL DESIGN NO. X704

4 SCALE 1 1/2"=1'-0"

NOTE:
UL DESIGN X704 REFERS TO STEEL COLUMN W. SPRAY-ON FIRE PROOFING ONLY.

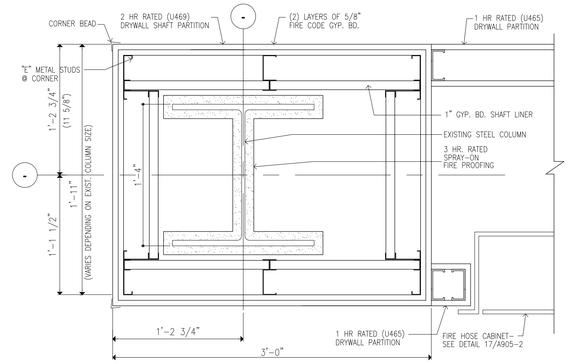

2 HR RATED COL. ENCLOSURE (U469) AT FIRE HOSE CABINET UL DESIGN NO. X704

3 SCALE 1 1/2"=1'-0"

NOTE:
UL DESIGN X704 REFERS TO STEEL COLUMN W. SPRAY-ON FIRE PROOFING ONLY.

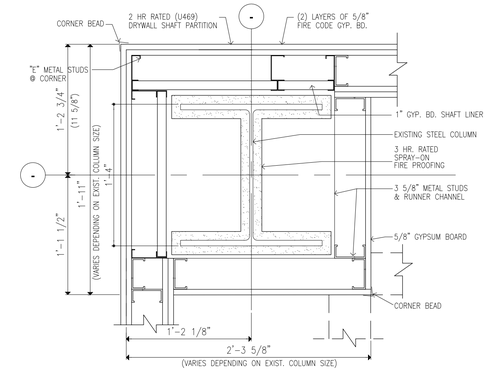

COLUMN DETAIL @ 2 HR RATED WALL (U469) UL DESIGN NO. X704

1 SCALE 1 1/2"=1'-0"

NOTE:
UL DESIGN X704 REFERS TO STEEL COLUMN W. SPRAY-ON FIRE PROOFING ONLY.

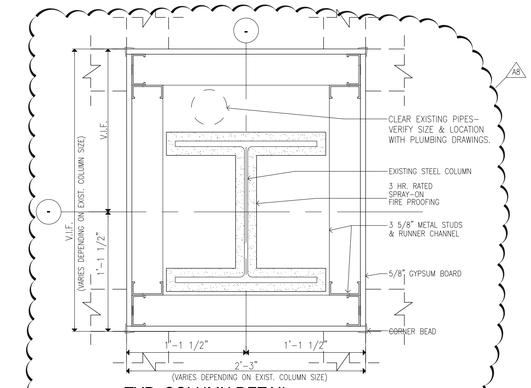

TYP. COLUMN DETAIL WITH PIPE ENCLOSURE UL DESIGN NO. X704

7 SCALE 1 1/2"=1'-0"

NOTE:
UL DESIGN X704 REFERS TO STEEL COLUMN W. SPRAY-ON FIRE PROOFING ONLY.

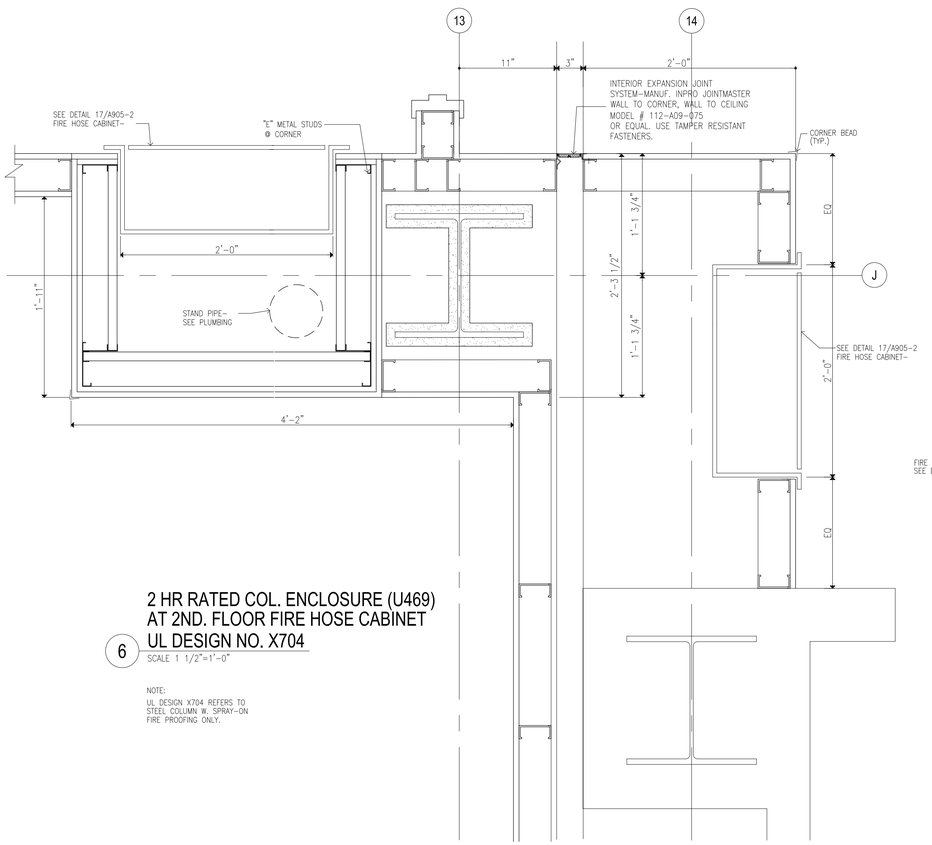

2 HR RATED COL. ENCLOSURE (U469) AT 2ND. FLOOR FIRE HOSE CABINET UL DESIGN NO. X704

6 SCALE 1 1/2"=1'-0"

NOTE:
UL DESIGN X704 REFERS TO STEEL COLUMN W. SPRAY-ON FIRE PROOFING ONLY.

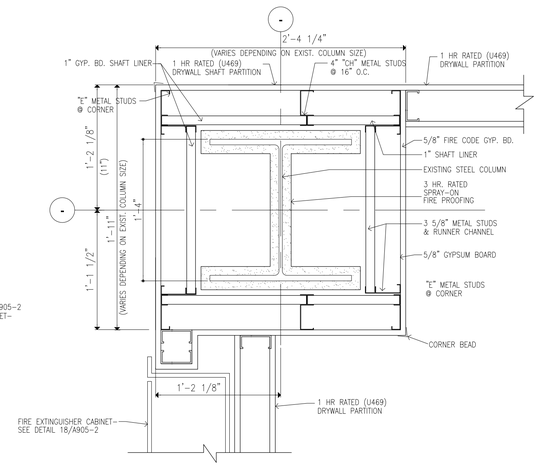

1 HR RATED COL. ENCLOSURE (U465) AT FIRE EXTINGUISHER CABINET UL DESIGN NO. X704

5 SCALE 1 1/2"=1'-0"

NOTE:
UL DESIGN X704 REFERS TO STEEL COLUMN W. SPRAY-ON FIRE PROOFING ONLY.

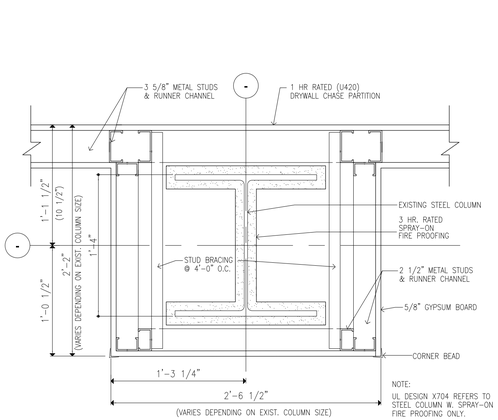

COLUMN DETAIL @ 1 HR RATED WALL (U420) UL DESIGN NO. X704 FOR COLUMN

2 SCALE 1 1/2"=1'-0"

NOTE:
UL DESIGN X704 REFERS TO STEEL COLUMN W. SPRAY-ON FIRE PROOFING ONLY.

NOTES:
TAMPER RESISTANT FASTENERS:
TAMPER RESISTANT FASTENERS ARE TO BE USED FOR ALL FASTENERS EXPOSED TO VIEW ON EVERY PRODUCT AND ASSEMBLY EXPOSED TO VIEW OR ACCESSIBLE WITHIN THE INPATIENT ENVIRONMENT.

PERFORMANCE CRITERIA/TAMPER PROOF FASTENERS: ALL FASTENERS EXPOSED TO VIEW SHALL BE TAMPER RESISTANT, OF THE HEXALOBULAR (6-LOBED), PIN REJECT, INTERNAL DRIVE SYSTEM, MEETING ISO STANDARD 10664. (TYPICAL ALL PATIENT AREAS)

REVISED DRAWING 09/24/2015

NEW YORK STATE OF OPPORTUNITY. Office of General Services
DESIGN & CONSTRUCTION

CONSULTANTS:
RBSD ARCHITECTS P.C. | STV 100 Years
A Joint Venture
225 Park Avenue South
New York, New York 10003

WARNING:
THE ALTERATION OF THIS MATERIAL IN ANY WAY, UNLESS DONE UNDER THE DIRECTION OF A COMPARABLE PROFESSIONAL, I.E. ARCHITECT FOR AN ARCHITECT, ENGINEER FOR AN ENGINEER OR LANDSCAPE ARCHITECT FOR A LANDSCAPE ARCHITECT, IS A VIOLATION OF THE NEW YORK STATE EDUCATION LAW AND/OR REGULATIONS AS A CLASS 'A' MISDEMEANOR.

REGISTERED ARCHITECT WILLIAM B. BELMAN NO. 10 NEW YORK STATE

CONTRACT: CONSTRUCTION

TITLE: MAJOR BUILDING RENOVATIONS FOR THE MANHATTAN FORENSIC RELOCATION

LOCATION: MANHATTAN PSYCHIATRIC CENTER, BUILDING No. 102
600 EAST 125TH STREET WARDS ISLAND, NY 10035

CLIENT: NYS OFFICE OF MENTAL HEALTH

PROGRESS PRINT

MARK	DATE	DESCRIPTION
A8	09-24-2015	ADDENDUM #8
A6	09-03-2015	ADDENDUM #6
A5	08-12-2015	ADDENDUM #5
	6-15-2015	BID DOCUMENT

PROJECT NUMBER:	44578
DESIGNED BY:	MAK / WW
DRAWN BY:	JS/SV
FIELD CHECK:	N/A
APPROVED:	WS / MAK / LF

SHEET TITLE:
WALL & COLUMN DETAILS

BUILDING NUMBER: 102
DRAWING NUMBER: A-801A-2
SHEET

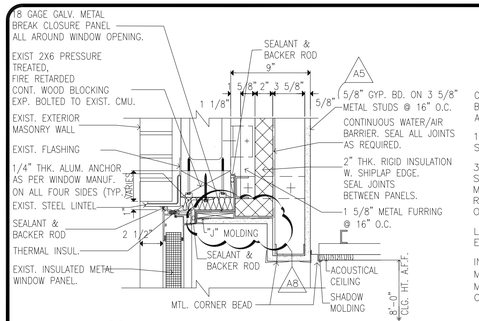

1 WINDOW HEAD DETAIL @ 102 BLDG.
SCALE: 1 1/2"=1'-0"

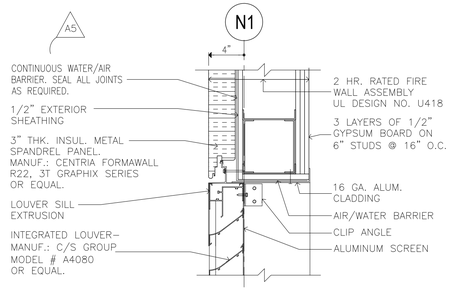

5 LOUVER HEAD DETAIL
SCALE: 1 1/2"=1'-0"

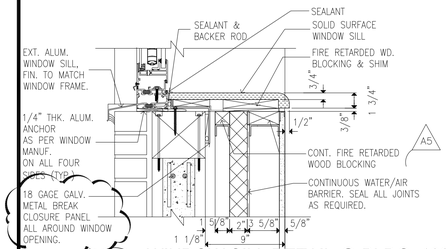

2 WINDOW SILL DETAIL @ BLDG. 102
SCALE: 1 1/2"=1'-0"

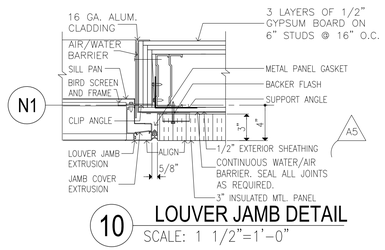

10 LOUVER JAMB DETAIL
SCALE: 1 1/2"=1'-0"

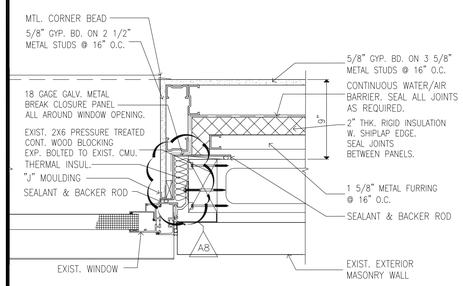

3 WINDOW JAMB DETAIL @ BLDG. 102
SCALE: 1 1/2"=1'-0"

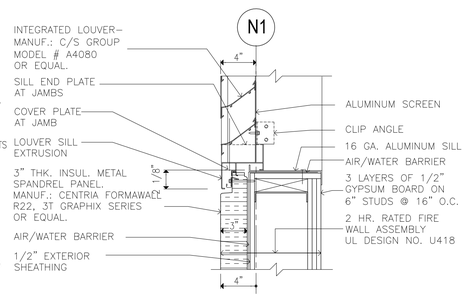

6 LOUVER SILL DETAIL
SCALE: 1 1/2"=1'-0"

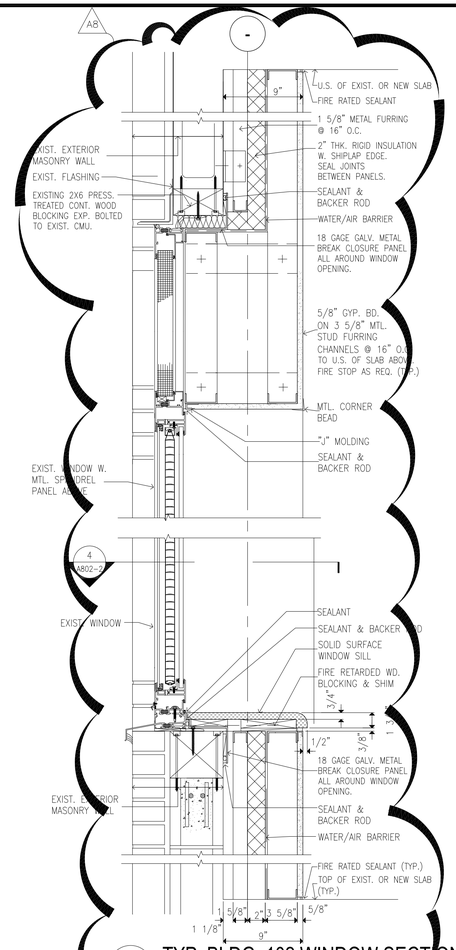

7 TYP. BLDG. 102 WINDOW SECTION
SCALE: 1 1/2"=1'-0"

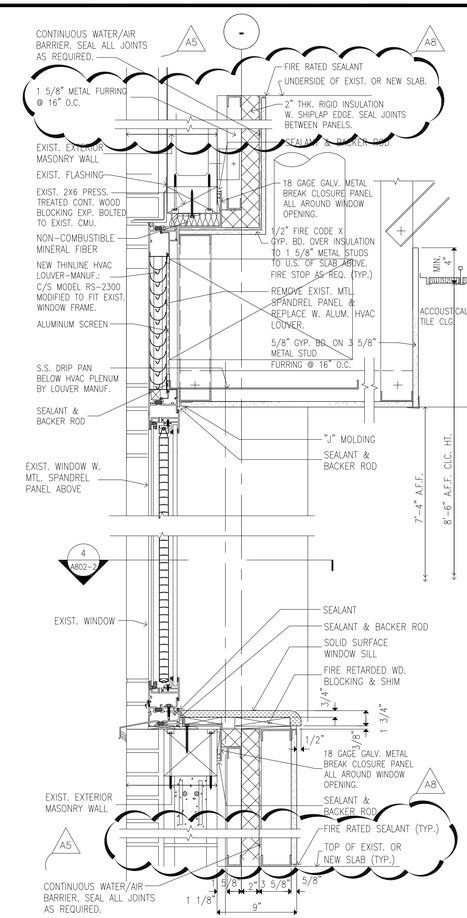

8 BLDG. 102 WINDOW / LOUVER SECTION
SCALE: 1 1/2"=1'-0"

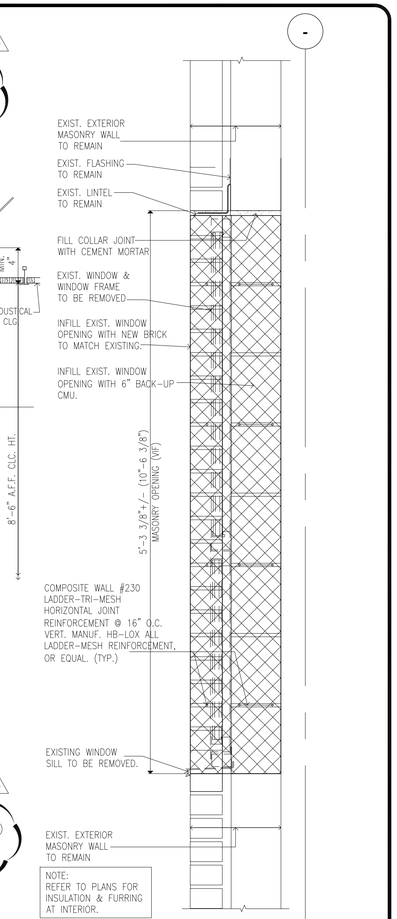

13 SECTION THRU MASONRY OPENING INFILL
SCALE: 1 1/2"=1'-0"

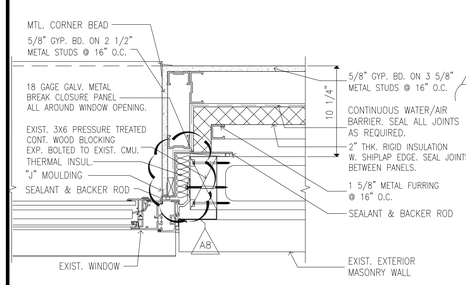

4 WINDOW JAMB DETAIL @ BLDG. 102
SCALE: 1 1/2"=1'-0"

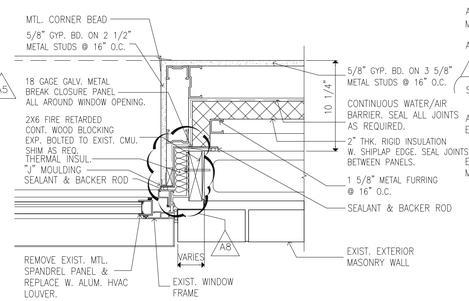

9 WINDOW /LOUVER JAMB DETAIL @ BLDG. 102
SCALE: 1 1/2"=1'-0"

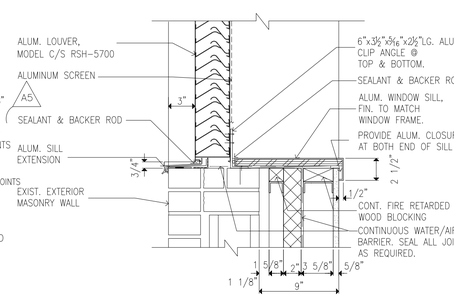

11 LOUVER SILL DETAIL @ BLDG. 102
SCALE: 1 1/2"=1'-0"

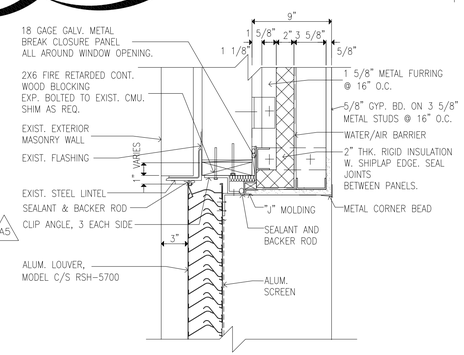

12 LOUVER HEAD DETAIL @ BLDG. 102
SCALE: 1 1/2"=1'-0"

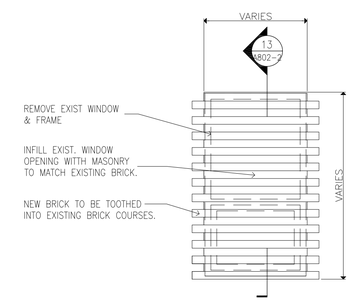

NOTES:
TAMPER RESISTANT FASTENERS:
TAMPER RESISTANT FASTENERS ARE TO BE USED FOR ALL FASTENERS EXPOSED TO VIEW ON EVERY PRODUCT AND ASSEMBLY EXPOSED TO VIEW OR ACCESSIBLE WITHIN THE INPATIENT ENVIRONMENT.

PERFORMANCE CRITERIA/TAMPER PROOF FASTENERS:
ALL FASTENERS EXPOSED TO VIEW SHALL BE TAMPER RESISTANT, OF THE HEXALOBULAR (6-LOBED), PIN REJECT, INTERNAL DRIVE SYSTEM, MEETING ISO STANDARD 10664.
(TYPICAL ALL PATIENT AREAS)

15 ELEVATION @ MASONRY OPENING INFILL
SCALE: 1/2"=1'-0"

REVISED DRAWING 09/24/2015

NEW YORK STATE OF OPPORTUNITY. Office of General Services
DESIGN & CONSTRUCTION

CONSULTANTS:
RBSD ARCHITECTS P.C. | STV 100 Years
A Joint Venture
225 Park Avenue South
New York, New York 10003

WARNING:
THE ALTERATION OF THIS MATERIAL IN ANY WAY, UNLESS DONE UNDER THE DIRECTION OF A COMPARABLE PROFESSIONAL, I.E. ARCHITECT FOR AN ARCHITECT, ENGINEER FOR AN ENGINEER OR LANDSCAPE ARCHITECT FOR A LANDSCAPE ARCHITECT, IS A VIOLATION OF THE NEW YORK STATE EDUCATION LAW AND/OR REGULATIONS AS A CLASS "A" MISDEMEANOR.

REGISTERED ARCHITECT WILLIAM S. BELSKI STATE OF NEW YORK

CONTRACT: CONSTRUCTION

TITLE: MAJOR BUILDING RENOVATIONS FOR THE MANHATTAN FORENSIC RELOCATION

LOCATION: MANHATTAN PSYCHIATRIC CENTER, BUILDING No. 102
600 EAST 125TH STREET WARDS ISLAND, NY 10035

CLIENT: NYS OFFICE OF MENTAL HEALTH

PROGRESS PRINT

MARK	DATE	DESCRIPTION
A8	09-24-2015	ADDENDUM #8
A6	09-03-2015	ADDENDUM #6
A5	08-12-2015	ADDENDUM #5
	6-15-2015	BID DOCUMENT

PROJECT NUMBER:	44578
DESIGNED BY:	MAK / WW
DRAWN BY:	JS/SV
FIELD CHECK:	N/A
APPROVED:	WS / MAK / LF

SHEET TITLE:
WINDOW DETAILS AND MASONRY INFILL DETAILS

BUILDING NUMBER: 102
DRAWING NUMBER: A-802-2
SHEET

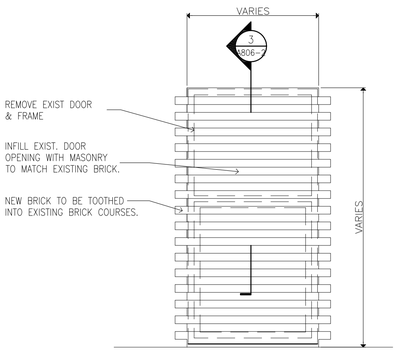

1 ELEVATION @ MASONRY OPENING INFILL (EXTERIOR DOOR)
SCALE: 1/2"=1'-0"

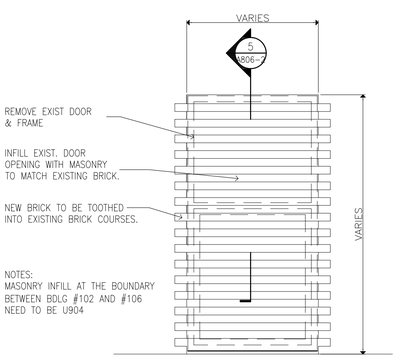

2 ELEVATION @ MASONRY OPENING INFILL (INTERIOR DOOR)
SCALE: 1/2"=1'-0"

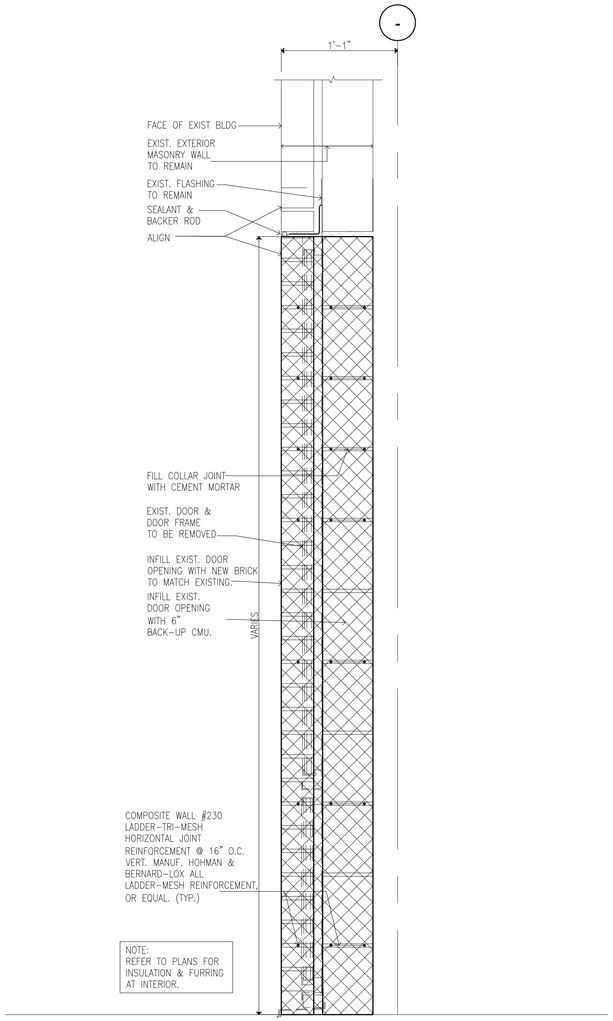

3 SECTION THRU MASONRY OPENING INFILL EXTERIOR DOOR
SCALE: 1 1/2"=1'-0"

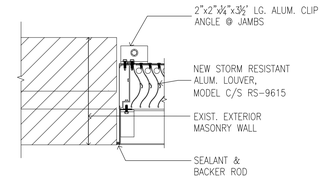

6 BLDG 102 LOUVER SECTION
SCALE: 1 1/2"=1'-0"

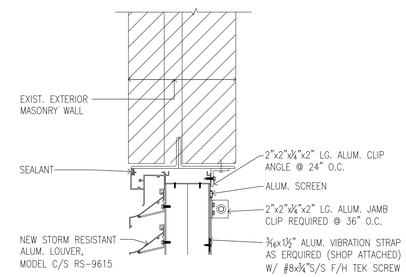

5 BLDG 102 LOUVER SECTION
SCALE: 1 1/2"=1'-0"

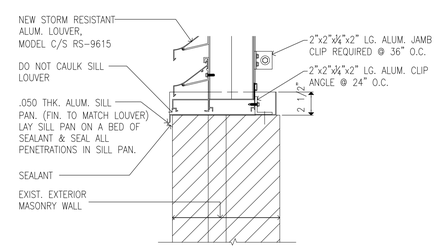

4 BLDG 102 LOUVER SECTION
SCALE: 1 1/2"=1'-0"

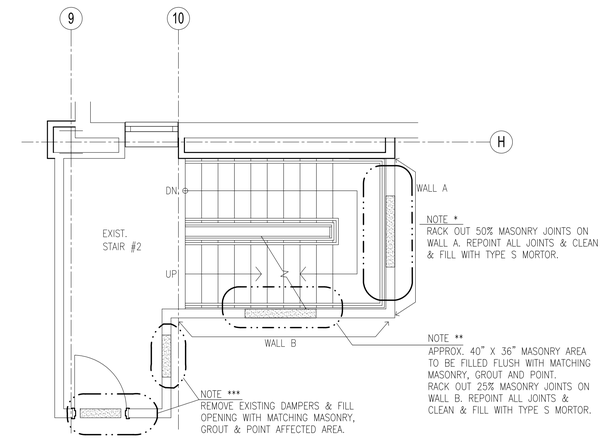

7 TYPICAL STAIR #2 MASONRY REHABILITATION
SCALE: 1/4"=1'-0"

NOTES:
TAMPER RESISTANT FASTENERS:
TAMPER RESISTANT FASTENERS ARE TO BE USED FOR ALL FASTENERS EXPOSED TO VIEW ON EVERY PRODUCT AND ASSEMBLY EXPOSED TO VIEW OR ACCESSIBLE WITHIN THE INPATIENT ENVIRONMENT.

PERFORMANCE CRITERIA/TAMPER PROOF FASTENERS:
ALL FASTENERS EXPOSED TO VIEW SHALL BE TAMPER RESISTANT, OF THE HEXALOBULAR (6-LOBED), PIN REJECT, INTERNAL DRIVE SYSTEM, MEETING ISO STANDARD 10664. (TYPICAL ALL PATIENT AREAS)

REVISED DRAWING 09/24/2015

NEW YORK STATE OF OPPORTUNITY. Office of General Services
DESIGN & CONSTRUCTION

CONSULTANTS:
RBSD ARCHITECTS P.C. | STV 100 Years
A Joint Venture
225 Park Avenue South
New York, New York 10003

WARNING:
THE ALTERATION OF THIS MATERIAL IN ANY WAY, UNLESS DONE UNDER THE DIRECTION OF A COMPARABLE PROFESSIONAL, I.E. ARCHITECT FOR AN ARCHITECT, ENGINEER FOR AN ENGINEER OR LANDSCAPE ARCHITECT FOR A LANDSCAPE ARCHITECT, IS A VIOLATION OF THE NEW YORK STATE EDUCATION LAW AND/OR REGULATIONS. IT IS A CLASS 'A' MISDEMEANOR.

REGISTERED ARCHITECT WILLIAM B. SALTZMAN STATE OF NEW YORK No. 10500

CONTRACT: CONSTRUCTION
TITLE: MAJOR BUILDING RENOVATIONS FOR THE MANHATTAN FORENSIC RELOCATION
LOCATION: MANHATTAN PSYCHIATRIC CENTER, BUILDING No. 102 600 EAST 125TH STREET WARDS ISLAND, NY 10035
CLIENT: NYS OFFICE OF MENTAL HEALTH

PROGRESS PRINT

MARK	DATE	DESCRIPTION
A8	09-24-2015	ADDENDUM #8
A6	09-03-2015	ADDENDUM #6
A5	08-12-2015	ADDENDUM #5
	6-15-2015	BID DOCUMENT

PROJECT NUMBER:	44578
DESIGNED BY:	MAK / WW
DRAWN BY:	JS/SV
FIELD CHECK:	N/A
APPROVED:	WS / MAK / LF

SHEET TITLE:
MASONRY INFILL AND LOUVER DETAILS

BUILDING NUMBER: 102
SHEET
DRAWING NUMBER: A8 A-806-2

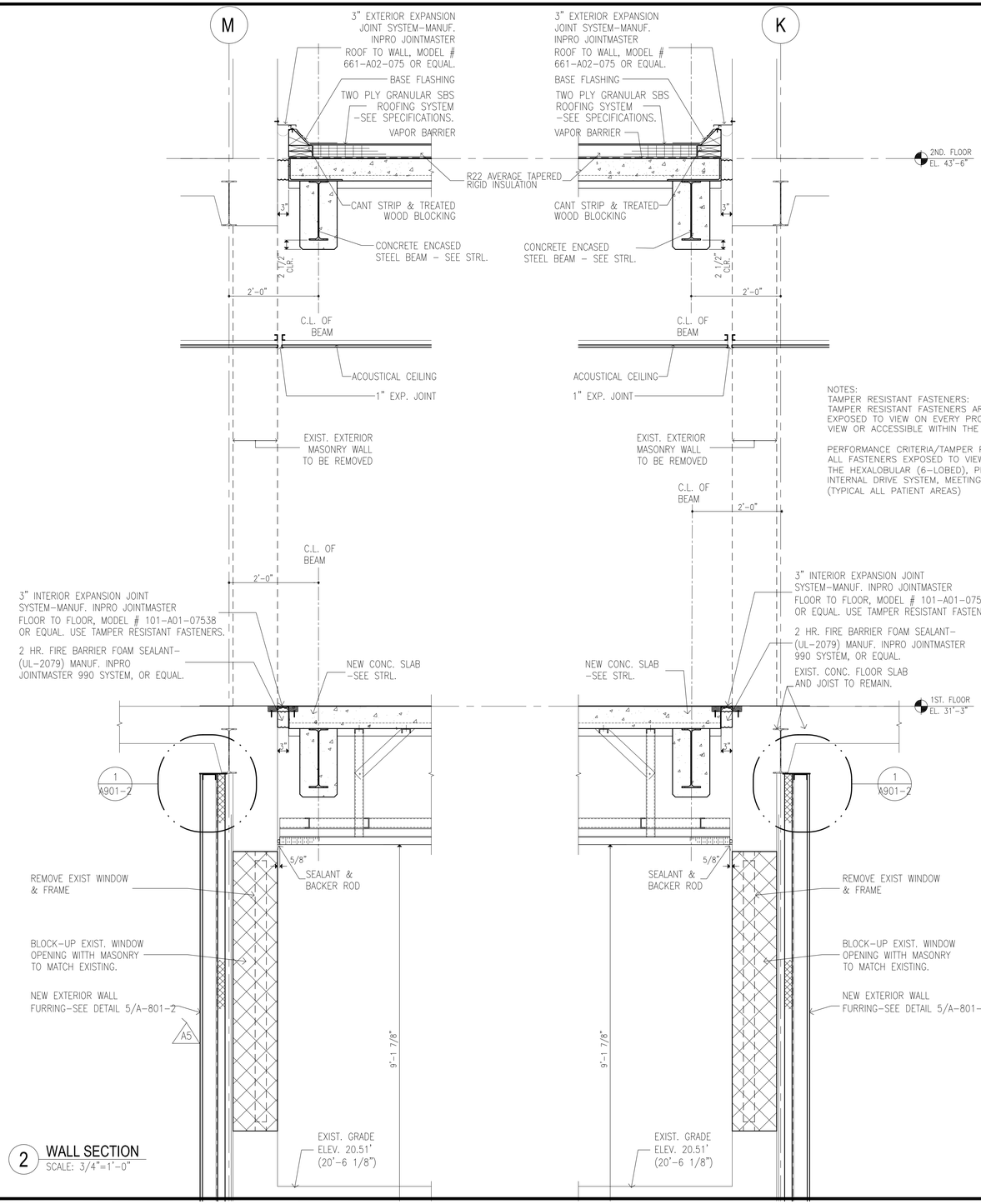

2 WALL SECTION
SCALE: 3/4"=1'–0"

NOTES:
TAMPER RESISTANT FASTENERS:
TAMPER RESISTANT FASTENERS ARE TO BE USED FOR ALL FASTENERS EXPOSED TO VIEW ON EVERY PRODUCT AND ASSEMBLY EXPOSED TO VIEW OR ACCESSIBLE WITHIN THE INPATIENT ENVIRONMENT.

PERFORMANCE CRITERIA/TAMPER PROOF FASTENERS:
ALL FASTENERS EXPOSED TO VIEW SHALL BE TAMPER RESISTANT, OF THE HEXALOBULAR (6–LOBED), PIN REJECT, INTERNAL DRIVE SYSTEM, MEETING ISO STANDARD 10664.
(TYPICAL ALL PATIENT AREAS)

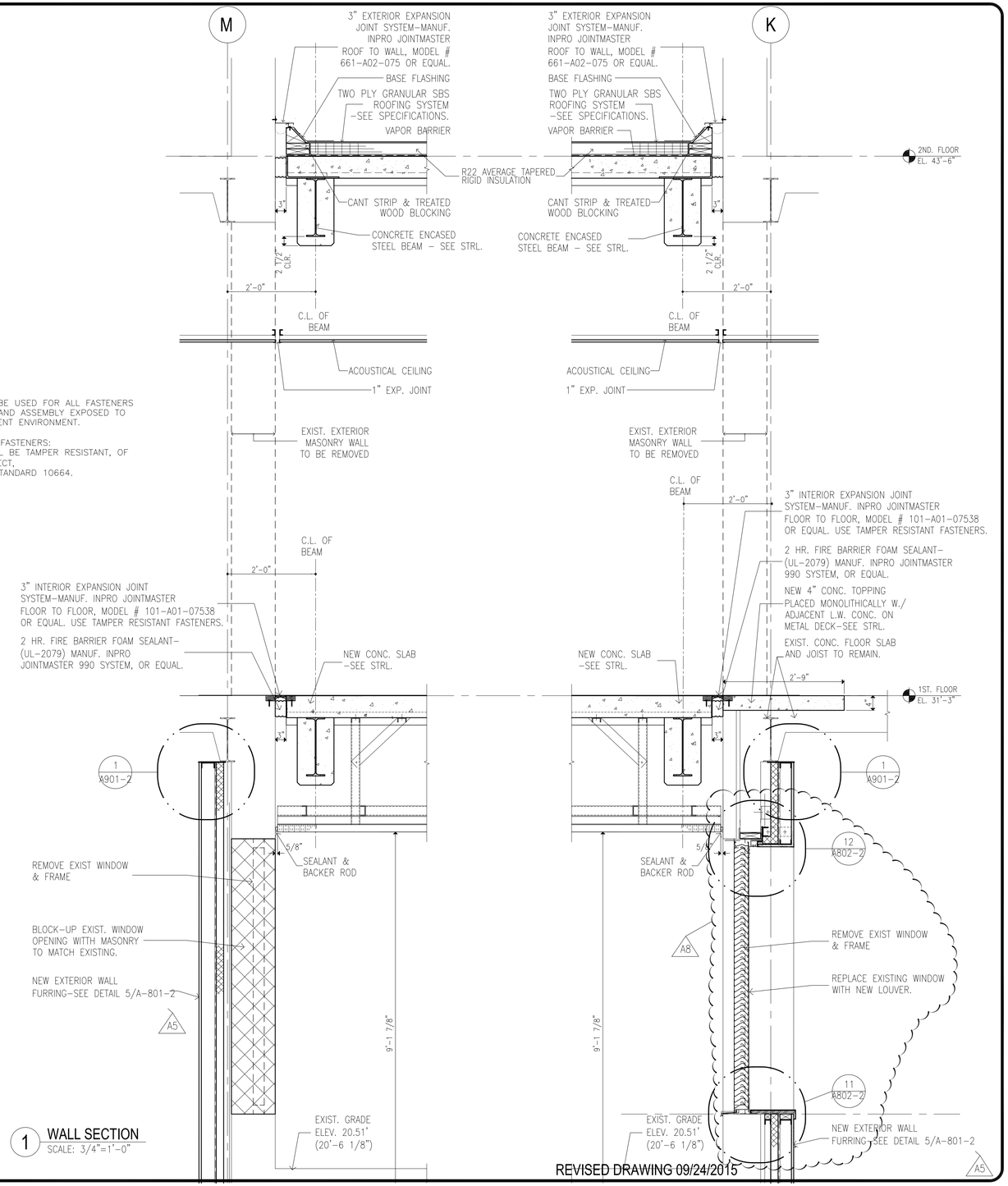

1 WALL SECTION
SCALE: 3/4"=1'–0"

REVISED DRAWING 09/24/2015

NEW YORK STATE OF OPPORTUNITY. Office of General Services
DESIGN & CONSTRUCTION

CONSULTANTS:
RBSD ARCHITECTS P.C. | STV 100 Years
A Joint Venture
225 Park Avenue South
New York, New York 10003

WARNING:
THE ALTERATION OF THIS MATERIAL IN ANY WAY, UNLESS DONE UNDER THE DIRECTION OF A COMPARABLE PROFESSIONAL, I.E. ARCHITECT FOR AN ARCHITECT, ENGINEER FOR AN ENGINEER OR LANDSCAPE ARCHITECT FOR A LANDSCAPE ARCHITECT, IS A VIOLATION OF THE NEW YORK STATE EDUCATION LAW AND/OR REGULATIONS. IT IS A CLASS 'A' MISDEMEANOR.

REGISTERED ARCHITECT WILLIAM B. BELLAN NO. 10542 STATE OF NEW YORK

CONTRACT: CONSTRUCTION

TITLE: MAJOR BUILDING RENOVATIONS FOR THE MANHATTAN FORENSIC RELOCATION

LOCATION: MANHATTAN PSYCHIATRIC CENTER, BUILDING No. 102
600 EAST 125TH STREET WARDS ISLAND, NY 10035

CLIENT: NYS OFFICE OF MENTAL HEALTH

PROGRESS PRINT

MARK	DATE	DESCRIPTION
A8	09-24-2015	ADDENDUM #8
A6	09-03-2015	ADDENDUM #6
A5	08-12-2015	ADDENDUM #5
	6-15-2015	BID DOCUMENT

PROJECT NUMBER:	44578
DESIGNED BY:	MAK / WW
DRAWN BY:	JS/SV
FIELD CHECK:	N/A
APPROVED:	WS / MAK / LF

SHEET TITLE:
WALL SECTIONS

BUILDING NUMBER: 102
DRAWING NUMBER: A-816-2
SHEET

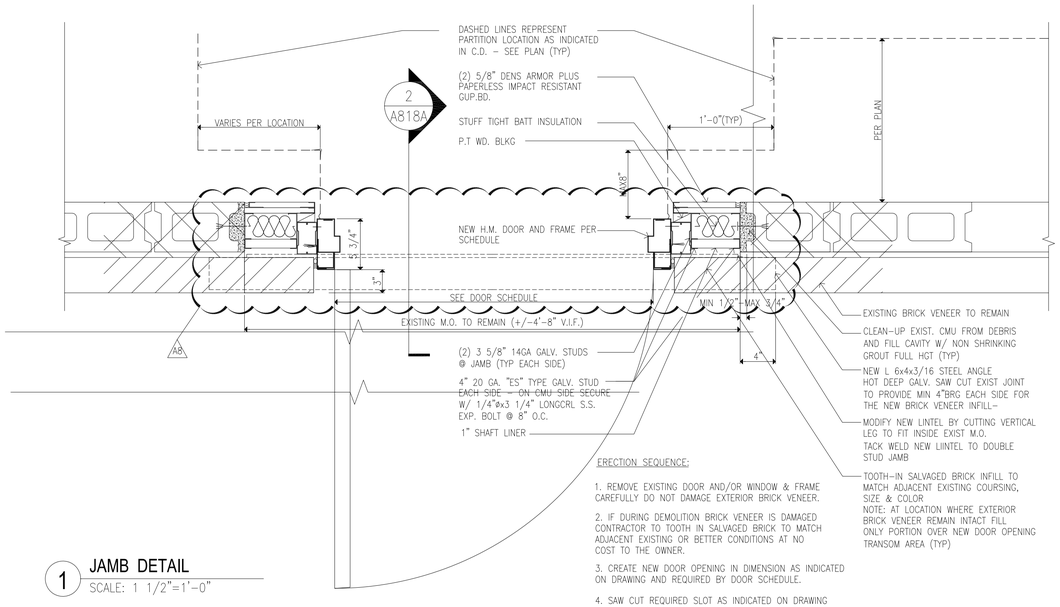

ERECTION SEQUENCE:

1. REMOVE EXISTING DOOR AND/OR WINDOW & FRAME CAREFULLY DO NOT DAMAGE EXTERIOR BRICK VENEER.

2. IF DURING DEMOLITION BRICK VENEER IS DAMAGED CONTRACTOR TO TOOTH IN SALVAGED BRICK TO MATCH ADJACENT EXISTING OR BETTER CONDITIONS AT NO COST TO THE OWNER.

3. CREATE NEW DOOR OPENING IN DIMENSION AS INDICATED ON DRAWING AND REQUIRED BY DOOR SCHEDULE.

4. SAW CUT REQUIRED SLOT AS INDICATED ON DRAWING FOR THE INSTALLATION OF THE NEW LINTEL

5. INSTALL 5x4x3/8" H.D. GALV. STEEL ANGLE AND SECURE TO ADJACENT MASONRY W/ 1/4" DIIA. EXPANSION BOLTS @ 8" O.C.

1 JAMB DETAIL
SCALE: 1 1/2"=1'-0"

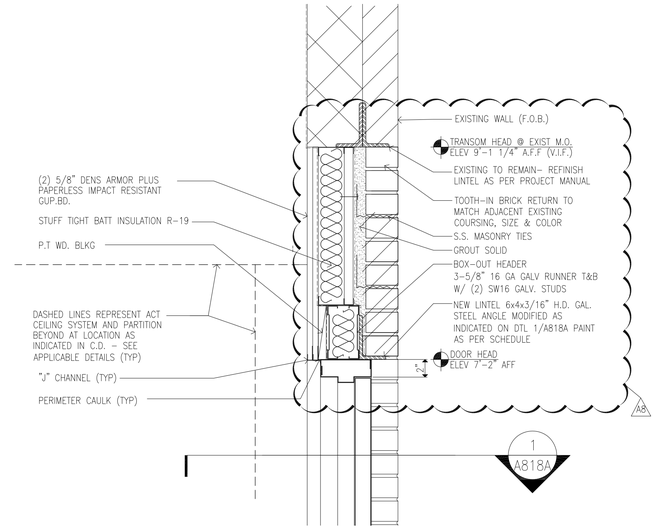

2 HEAD DETAIL
SCALE: 1 1/2"=1'-0"

ADDENDUM DRAWING 09/24/2015

NEW YORK STATE OF OPPORTUNITY. Office of General Services

DESIGN & CONSTRUCTION

CONSULTANTS:

RBSD ARCHITECTS P.C. | STV 100 Years

A Joint Venture

225 Park Avenue South
New York, New York 10003

WARNING:

THE ALTERATION OF THIS MATERIAL IN ANY WAY, UNLESS DONE UNDER THE DIRECTION OF A COMPARABLE PROFESSIONAL, I.E. ARCHITECT FOR AN ARCHITECT, ENGINEER FOR AN ENGINEER OR LANDSCAPE ARCHITECT FOR A LANDSCAPE ARCHITECT, IS A VIOLATION OF THE NEW YORK STATE EDUCATION LAW AND/OR REGULATIONS AND IS A CLASS 'A' MISDEMEANOR.

REGISTERED ARCHITECT WILLIAM S. BELLAK STATE OF NEW YORK

CONTRACT: CONSTRUCTION

TITLE: MAJOR BUILDING RENOVATIONS FOR THE MANHATTAN FORENSIC RELOCATION

LOCATION: MANHATTAN PSYCHIATRIC CENTER, BUILDING No. 102
600 EAST 125TH STREET WARDS ISLAND, NY 10035

CLIENT: NYS OFFICE OF MENTAL HEALTH

MARK	DATE	DESCRIPTION
A8	09-24-2015	ADDENDUM #8
A6	09-03-2015	ADDENDUM #6
A5	08-12-2015	ADDENDUM #5
	06-15-2015	BID DOCUMENT

PROJECT NUMBER:	44578
DESIGNED BY:	MAK / WW
DRAWN BY:	JS/ SV
FIELD CHECK:	N/A
APPROVED:	WS / MAK / LF

SHEET TITLE:

EXTERIOR DOOR DETAILS

BUILDING NUMBER: 102

DRAWING NUMBER: A-818A-2

SHEET

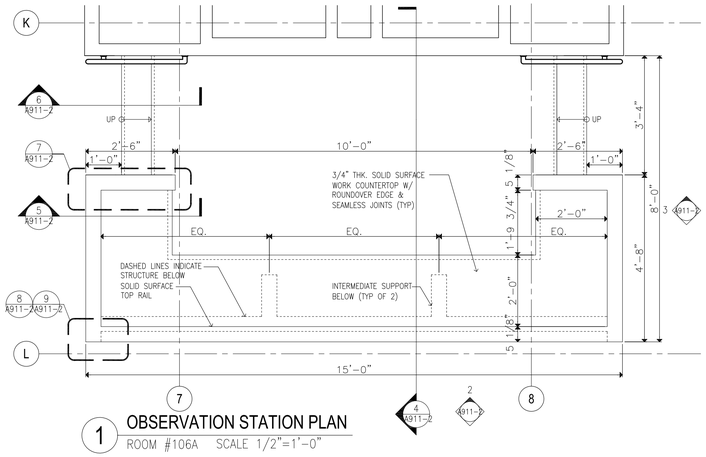

1 OBSERVATION STATION PLAN
ROOM #106A SCALE 1/2"=1'-0"

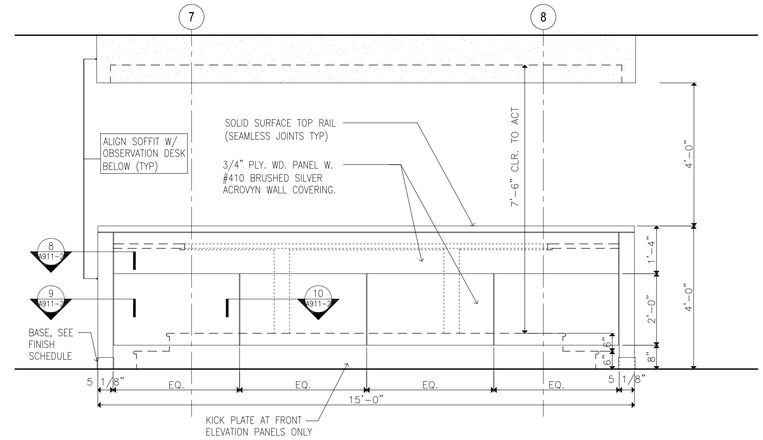

2 OBSERVATION STATION FRONT ELEVATION
ROOM #106A SCALE 1/2"=1'-0"

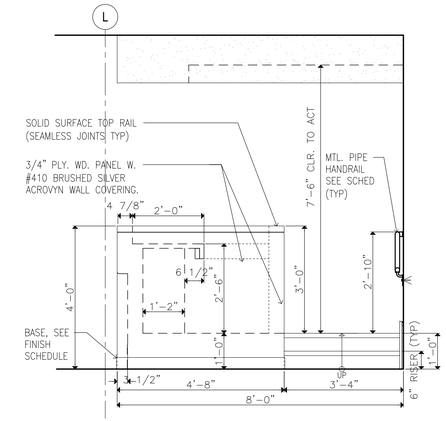

3 OBSERVATION STATION SIDE ELEVATION
ROOM #106A SCALE 1/2"=1'-0"

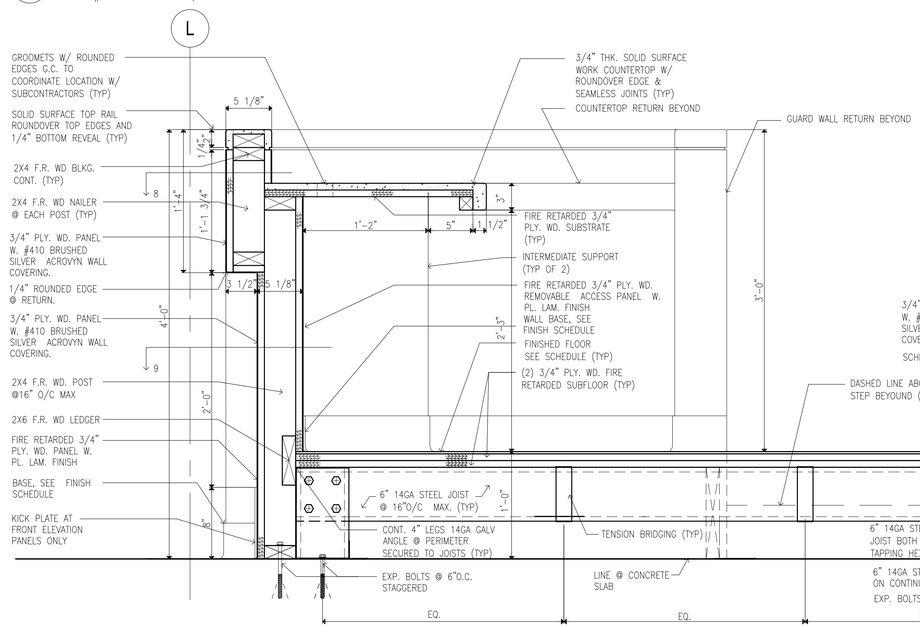

4 DESK CROSS SECTION
SCALE 1 1/2"=1'-0"

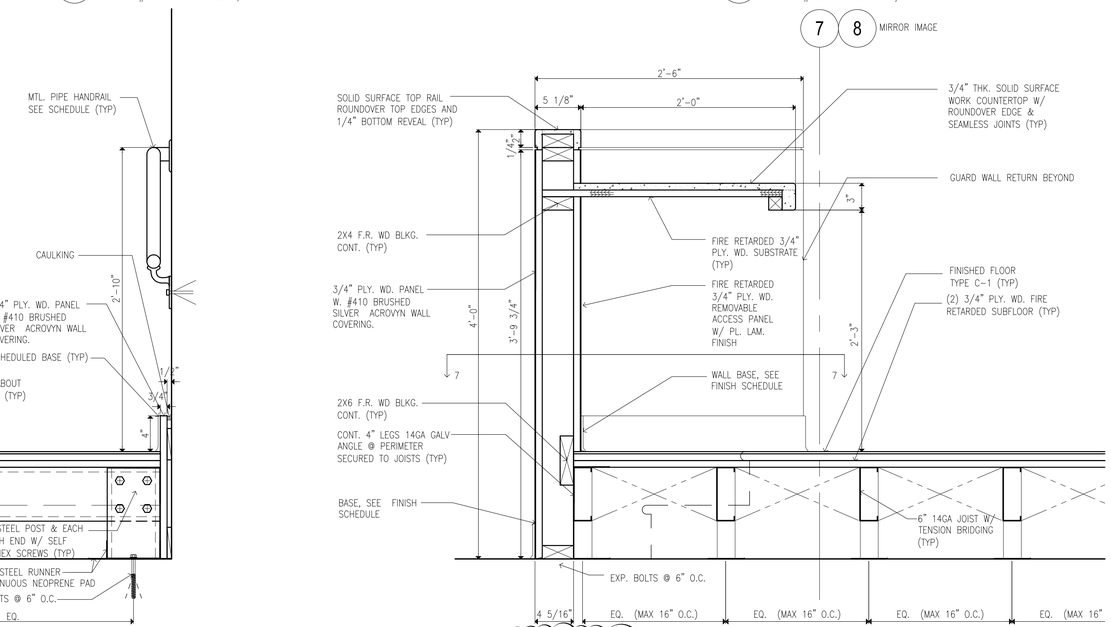

5 DESK PARTIAL SIDE SECTION
SCALE 1 1/2"=1'-0"

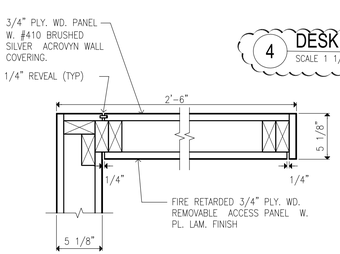

7 PLAN DETAIL
SCALE 1 1/2"=1'-0"

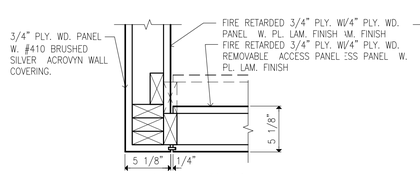

8 PLAN DETAIL
SCALE 1 1/2"=1'-0"

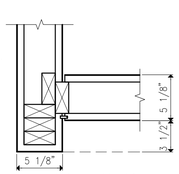

9 PLAN DETAIL
SCALE 1 1/2"=1'-0"

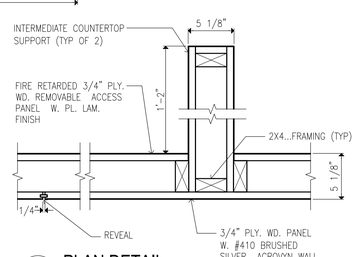

10 PLAN DETAIL
SCALE 1 1/2"=1'-0"

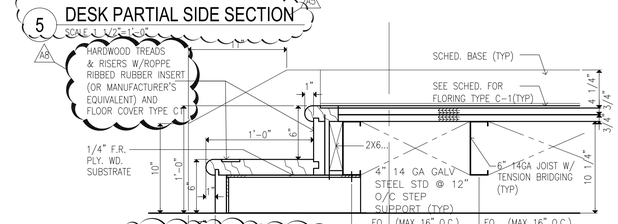

6 STEPS SECTION DETAIL
SCALE 1 1/2"=1'-0"

GENERAL NOTE:
FOR THE RAISED PLATFORM FRAMING USE 6" 14GA GALV. STRUCT. STEEL STUDS @ 16" O/C MAX.
G.C. TO PROVIDE SHOP DWG SIGN AND SEALED BY LICENSED ENGINEERS.
ALL PLYWOOD, WD. FRAMING AND BLOCKING TO BE FIRE RETARDED (TYP)

REVISED DRAWING 09/24/2015

NEW YORK STATE OF OPPORTUNITY. Office of General Services
DESIGN & CONSTRUCTION

CONSULTANTS:
RBSD ARCHITECTS P.C. | STV 100 Years
A Joint Venture
225 Park Avenue South
New York, New York 10003

WARNING:
THE ALTERATION OF THIS MATERIAL IN ANY WAY, UNLESS DONE UNDER THE DIRECTION OF A COMPARABLE PROFESSIONAL, I.E. ARCHITECT FOR AN ARCHITECT, ENGINEER FOR AN ENGINEER OR LANDSCAPE ARCHITECT FOR A LANDSCAPE ARCHITECT, IS A VIOLATION OF THE NEW YORK STATE EDUCATION LAW AND/OR REGULATIONS AND IS A CLASS 'A' MISDEMEANOR.

REGISTERED ARCHITECT WILLIAM P. SEAN N.Y. 105 STATE OF NEW YORK

CONTRACT: CONSTRUCTION

TITLE: MAJOR BUILDING RENOVATIONS FOR THE MANHATTAN FORENSIC RELOCATION

LOCATION: MANHATTAN PSYCHIATRIC CENTER, BUILDING No. 102
600 EAST 125TH STREET WARDS ISLAND, NY 10035

CLIENT: NYS OFFICE OF MENTAL HEALTH

PROGRESS PRINT

MARK	DATE	DESCRIPTION
A8	09-24-2015	ADDENDUM #8
A6	09-03-2015	ADDENDUM #6
A5	08-12-2015	ADDENDUM #5
	6-15-2015	BID DOCUMENT

PROJECT NUMBER:	44578
DESIGNED BY:	MAK / WW
DRAWN BY:	JS/SV
FIELD CHECK:	N/A
APPROVED:	WS / MAK / LF

SHEET TITLE:
MILLWORK PLAN & ELEVATIONS

BUILDING NUMBER: 102

DRAWING NUMBER: A-911-2

SHEET

LOUVER Schedule

Type Mark	Level	ROOM	Louver Width	Louver Height	Louver area	Type	Required Free Area	Required CFM	Required Free Area(%)	C/S louver
L-1	FIN. BASEMENT	FAN ROOM 018A	3'-1"	6'-3 1/4"	19.34 SF	EA	5.50 SF	3600	28.4%	RS5700
L-1	FIN. BASEMENT	FAN ROOM 018A	3'-1"	6'-3 1/4"	19.34 SF					RS5700
L-2	FIN. BASEMENT	ELEC. SUBSTATION 008A	4'-8"	6'-4"	29.56 SF	EA	10.00 SF	7000	33.8%	RS5700
L-2	FIN. BASEMENT	ELEC. SUBSTATION 008A	4'-8"	6'-4"	29.56 SF	OAI	14.00 SF	7000	47.4%	RS5700
L-2	FIN. BASEMENT	ELEC. SUBSTATION 008B	4'-8"	6'-4"	29.56 SF	OAI	20.00 SF	10000	67.7%	RS5700
L-2	FIN. BASEMENT	ELEC. SUBSTATION 008B	4'-8"	6'-4"	29.56 SF	EA	14.00 SF	10000	47.4%	RS5700
L-2	FIN. BASEMENT	MECHANICAL ROOM 011B(EAST)	4'-8"	6'-4"	29.56 SF	EA	9.00 SF	6000	30.5%	RS5700
L-2	FIN. BASEMENT	MECHANICAL ROOM 011B(WEST)	4'-8"	6'-4"	29.56 SF	EA	9.00 SF	6000	30.5%	RS5700
L-2	FIN. BASEMENT	MECHANICAL ROOM 035A(NORTH)	4'-8"	6'-4"	29.56 SF	EA	7.50 SF	4300	25.4%	RS5700
L-2	FIN. BASEMENT	MECHANICAL ROOM 035A(SOUTH)	4'-8"	6'-4"	29.56 SF	OAI	10.00 SF	5000	33.8%	RS5700
L-2	FIN. BASEMENT	ELEC. SUBSTATION 008B	4'-8"	6'-4"	29.56 SF	OAI	14.00 SF	7000	47.4%	RS5700
L-6	FIN. BASEMENT	MECHANICAL ROOM 011B	8'-6"	6'-4"	53.83 SF	OAI	28.00 SF	14000	52.0%	RS5700
W2-L	FIN. BASEMENT	STORAGE 010B-2	4'-0 1/4"	1'-3 3/4"	5.28 SF	EA	1.25 SF	540	23.7%	RS2300
W2-L	FIN. BASEMENT	CLASSROOM 009B	4'-0 1/4"	1'-3 3/4"	5.28 SF	EA	1.25 SF	540	23.7%	RS2300
W2-L	FIN. BASEMENT	CLASSROOM 010B	4'-0 1/4"	1'-3 3/4"	5.28 SF	OAI	1.25 SF	540	23.7%	RS2300
W2-L	FIN. BASEMENT	CLASSROOM 009B	4'-0 1/4"	1'-3 3/4"	5.28 SF	OAI	1.25 SF	540	23.7%	RS2300
L-1	1ST FLOOR PLAN	MECHANICAL ROOM 153B(NORTH EAST)	3'-1"	6'-3 1/4"	19.34 SF	EA	9.50 SF	5600	49.1%	RS5700
L-1	1ST FLOOR PLAN	MECHANICAL ROOM 153B(NORTH WEST)	3'-1"	6'-3 1/4"	19.34 SF	EA	9.50 SF	5600	49.1%	RS5700
L-1	1ST FLOOR PLAN	MECHANICAL ROOM 153B(SOUTH WEST)	3'-1"	6'-3 1/4"	19.34 SF	OAI	9.00 SF	4300	46.5%	RS5700
L-5	1ST FLOOR PLAN	CORRIDOR 111B-1	8'-0"	2'-0"	16.00 SF	EA	6.00 SF	3600	37.5%	RS2300
L-5	1ST FLOOR PLAN	CORRIDOR 108A	8'-0"	2'-0"	16.00 SF	OAI	8.00 SF	4000	50.0%	RS2300
L-7	1ST FLOOR PLAN	MECHANICAL ROOM 153B(SOUTH EAST)	6'-2"	6'-4"	39.06 SF	OAI	17.00 SF	8700	43.5%	RS5700
W2-L	1ST FLOOR PLAN	CORRIDOR 115B(WEST)	4'-0 1/4"	1'-3 3/4"	5.28 SF	EA	1.25 SF	300	23.7%	RS2300
W2-L	1ST FLOOR PLAN	CONFERENCE 143B	4'-0 1/4"	1'-3 3/4"	5.28 SF	OAI	1.25 SF	540	23.7%	RS2300
W2-L	1ST FLOOR PLAN	CONFERENCE 134B	4'-0 1/4"	1'-3 3/4"	5.28 SF	OAI	1.00 SF	200	18.9%	RS2300
W2-L	1ST FLOOR PLAN	CORRIDOR 136B	4'-0 1/4"	1'-3 3/4"	5.28 SF	EA	1.00 SF	200	18.9%	RS2300
W2-L	1ST FLOOR PLAN	CORRIDOR 115B(EAST)	4'-0 1/4"	1'-3 3/4"	5.28 SF	OAI	1.00 SF	300	18.9%	RS2300
W2-L	1ST FLOOR PLAN	CONFERENCE 145B	4'-0 1/4"	1'-3 3/4"	5.28 SF	EA	1.25 SF	540	23.7%	RS2300
L-0	2ND FLOOR PLAN	STAIRCASE VESTIBULE 207A-1	2'-0"	8'-0"	16.00 SF					A4097
L-0	2ND FLOOR PLAN	STAIRCASE VESTIBULE 207A-1	2'-0"	8'-0"	16.00 SF					A4097
L-0	2ND FLOOR PLAN	STAIRCASE VESTIBULE 206A-1	2'-0"	8'-0"	16.00 SF					A4097
L-0	2ND FLOOR PLAN	STAIRCASE VESTIBULE 206A-1	2'-0"	8'-0"	16.00 SF					A4097
W1-L	2ND FLOOR PLAN	LARGE CONFERENCE ROOM 222A	2'-5 1/4"	1'-3 3/4"	3.20 SF	EA	1.25 SF	420	39.1%	RS2300
W1-L	2ND FLOOR PLAN	LARGE CONFERENCE ROOM 222A	2'-5 1/4"	1'-3 3/4"	3.20 SF	OAI	1.25 SF	420	39.1%	RS2300
W2-L	2ND FLOOR PLAN	SHTA BRIEFING ROOM 245A	4'-0 1/4"	1'-3 3/4"	5.28 SF	EA	1.50 SF	680	28.4%	RS2300
W2-L	2ND FLOOR PLAN	SHTA BRIEFING ROOM 245A	4'-0 1/4"	1'-3 3/4"	5.28 SF	OAI	1.50 SF	680	28.4%	RS2300
W2-L	2ND FLOOR PLAN	CONFERENCE 209A	4'-0 1/4"	1'-3 3/4"	5.28 SF	OAI	1.00 SF	200	18.9%	RS2300
W2-L	2ND FLOOR PLAN	CONFERENCE 209A	4'-0 1/4"	1'-3 3/4"	5.28 SF	EA	1.00 SF	200	18.9%	RS2300
L-0	3RD FLOOR PLAN	STAIRCASE VESTIBULE 334A-1	2'-0"	8'-0"	16.00 SF					A4097
L-0	3RD FLOOR PLAN	STAIRCASE VESTIBULE 334A-1	2'-0"	8'-0"	16.00 SF					A4097
L-0	3RD FLOOR PLAN	STAIRCASE VESTIBULE 347A-1	2'-0"	8'-0"	16.00 SF					A4097
L-0	3RD FLOOR PLAN	STAIRCASE VESTIBULE 347A-1	2'-0"	8'-0"	16.00 SF					A4097
L-0	4TH FLOOR PLAN	STAIRCASE VESTIBULE 447A-1	2'-0"	8'-0"	16.00 SF					A4097
L-0	4TH FLOOR PLAN	STAIRCASE VESTIBULE 434A-1	2'-0"	8'-0"	16.00 SF					A4097
L-0	4TH FLOOR PLAN	STAIRCASE VESTIBULE 434A-1	2'-0"	8'-0"	16.00 SF					A4097
L-0	4TH FLOOR PLAN	STAIRCASE VESTIBULE 447A-1	2'-0"	8'-0"	16.00 SF					A4097
L-9	4TH FLOOR PLAN	EXISTING MECHANICAL EQUIPMENT ROOM 407B	9'-0"	5'-9"	51.75 SF					RS9615
L-10	4TH FLOOR PLAN	EXISTING MECHANICAL EQUIPMENT ROOM 407B	8'-6"	5'-9"	48.88 SF					RS9615
L-0	5TH FLOOR PLAN	STAIRCASE VESTIBULE 534A-1	2'-0"	8'-0"	16.00 SF					A4097
L-0	5TH FLOOR PLAN	STAIRCASE VESTIBULE 534A-1	2'-0"	8'-0"	16.00 SF					A4097
L-0	5TH FLOOR PLAN	STAIRCASE VESTIBULE 547A-1	2'-0"	8'-0"	16.00 SF					A4097
L-0	5TH FLOOR PLAN	STAIRCASE VESTIBULE 547A-1	2'-0"	8'-0"	16.00 SF					A4097
L-9	5TH FLOOR PLAN	EXISTING MECHANICAL EQUIPMENT ROOM 507B	9'-0"	5'-9"	51.75 SF					RS9615
L-10	5TH FLOOR PLAN	EXISTING MECHANICAL EQUIPMENT ROOM 507B	8'-6"	5'-9"	48.88 SF					RS9615
L-0	6TH FLOOR PLAN	STAIRCASE VESTIBULE 634A-1	2'-0"	8'-0"	16.00 SF					A4097
L-0	6TH FLOOR PLAN	STAIRCASE VESTIBULE 634A-1	2'-0"	8'-0"	16.00 SF					A4097
L-0	6TH FLOOR PLAN	STAIRCASE VESTIBULE 647A-1	2'-0"	8'-0"	16.00 SF					A4097
L-0	6TH FLOOR PLAN	STAIRCASE VESTIBULE 647A-1	2'-0"	8'-0"	16.00 SF					A4097
L-9	6TH FLOOR PLAN	EXISTING MECHANICAL EQUIPMENT ROOM 607B	9'-0"	5'-9"	51.75 SF					RS9615
L-10	6TH FLOOR PLAN	EXISTING MECHANICAL EQUIPMENT ROOM 607B	8'-6"	5'-9"	48.88 SF					RS9615
L-0	7TH FLOOR PLAN	STAIRCASE VESTIBULE 734A-1	2'-0"	8'-0"	16.00 SF					A4097
L-0	7TH FLOOR PLAN	STAIRCASE VESTIBULE 734A-1	2'-0"	8'-0"	16.00 SF					A4097
L-0	7TH FLOOR PLAN	STAIRCASE VESTIBULE 747A-1	2'-0"	8'-0"	16.00 SF					A4097
L-0	7TH FLOOR PLAN	STAIRCASE VESTIBULE 747A-1	2'-0"	8'-0"	16.00 SF					A4097
L-9	7TH FLOOR PLAN	EXISTING MECHANICAL EQUIPMENT ROOM 707B	9'-0"	5'-9"	51.75 SF					RS9615
L-10	7TH FLOOR PLAN	EXISTING MECHANICAL EQUIPMENT ROOM 707B	8'-6"	5'-9"	48.88 SF					RS9615
L-0	8TH FLOOR PLAN	STAIRCASE VESTIBULE 834A-1	2'-0"	8'-0"	16.00 SF					A4097
L-0	8TH FLOOR PLAN	STAIRCASE VESTIBULE 834A-1	2'-0"	8'-0"	16.00 SF					A4097
L-0	8TH FLOOR PLAN	STAIRCASE VESTIBULE 847A-1	2'-0"	8'-0"	16.00 SF					A4097

LOUVER Schedule

Type Mark	Level	ROOM	Louver Width	Louver Height	Louver area	Type	Required Free Area	Required CFM	Required Free Area(%)	C/S louver
L-0	8TH FLOOR PLAN	STAIRCASE VESTIBULE 847A-1	2'-0"	8'-0"	16.00 SF					A4097
L-9	8TH FLOOR PLAN	EXISTING MECHANICAL EQUIPMENT ROOM 807B	9'-0"	5'-9"	51.75 SF					RS9615
L-10	8TH FLOOR PLAN	EXISTING MECHANICAL EQUIPMENT ROOM 807B	8'-6"	5'-9"	48.88 SF					RS9615
L-0	9TH FLOOR PLAN	STAIRCASE VESTIBULE 934A-1	2'-0"	8'-0"	16.00 SF					A4097
L-0	9TH FLOOR PLAN	STAIRCASE VESTIBULE 934A-1	2'-0"	8'-0"	16.00 SF					A4097
L-0	9TH FLOOR PLAN	STAIRCASE VESTIBULE 947A-1	2'-0"	8'-0"	16.00 SF					A4097
L-0	9TH FLOOR PLAN	STAIRCASE VESTIBULE 947A-1	2'-0"	8'-0"	16.00 SF					A4097
L-9	9TH FLOOR PLAN	EXISTING MECHANICAL EQUIPMENT ROOM 907B	9'-0"	5'-9"	51.75 SF					RS9615
L-10	9TH FLOOR PLAN	EXISTING MECHANICAL EQUIPMENT ROOM 907B	8'-6"	5'-9"	48.88 SF					RS9615
L-0	10TH FLOOR PLAN	STAIRCASE VESTIBULE 1034A-1	2'-0"	8'-0"	16.00 SF					A4097
L-0	10TH FLOOR PLAN	STAIRCASE VESTIBULE 1034A-1	2'-0"	8'-0"	16.00 SF					A4097
L-0	10TH FLOOR PLAN	STAIRCASE VESTIBULE 1047A-1	2'-0"	8'-0"	16.00 SF					A4097
L-0	10TH FLOOR PLAN	STAIRCASE VESTIBULE 1047A-1	2'-0"	8'-0"	16.00 SF					A4097
L-9	10TH FLOOR PLAN	EXISTING MECHANICAL EQUIPMENT ROOM 1007B	9'-0"	5'-9"	51.75 SF					RS9615
L-10	10TH FLOOR PLAN	EXISTING MECHANICAL EQUIPMENT ROOM 1007B	8'-6"	5'-9"	48.88 SF					RS9615
L-0	11TH FLOOR PLAN	STAIRCASE VESTIBULE 1134A-1	2'-0"	8'-0"	16.00 SF					A4097
L-0	11TH FLOOR PLAN	STAIRCASE VESTIBULE 1134A-1	2'-0"	8'-0"	16.00 SF					A4097
L-0	11TH FLOOR PLAN	STAIRCASE VESTIBULE 1147A-1	2'-0"	8'-0"	16.00 SF					A4097
L-0	11TH FLOOR PLAN	STAIRCASE VESTIBULE 1147A-1	2'-0"	8'-0"	16.00 SF					A4097
L-9	11TH FLOOR PLAN	EXISTING MECHANICAL EQUIPMENT ROOM 1107B	9'-0"	5'-9"	51.75 SF					RS9615
L-10	11TH FLOOR PLAN	EXISTING MECHANICAL EQUIPMENT ROOM 1107B	8'-6"	5'-9"	48.88 SF					RS9615
L-0	12TH FLOOR PLAN	STAIRCASE VESTIBULE 1223A-1	2'-0"	8'-0"	16.00 SF					A4097
L-0	12TH FLOOR PLAN	STAIRCASE VESTIBULE 1223A-1	2'-0"	8'-0"	16.00 SF					A4097
L-2	12TH FLOOR PLAN	MECHANICAL ROOM 1209A(NORTH)	4'-8"	6'-4"	29.56 SF	OAI	11.50 SF	5750	38.9%	RS5700
L-2	12TH FLOOR PLAN	MECHANICAL ROOM 1209A(SOUTH)	4'-8"	6'-4"	29.56 SF	OAI	11.50 SF	5750	38.9%	RS5700
L-2	12TH FLOOR PLAN	MECHANICAL ROOM 1209A	4'-8"	6'-4"	29.56 SF	EA	14.00 SF	9600	47.4%	RS5700
W2-L	12TH FLOOR PLAN	ARTS AND CRAFTS ROOM 1224A	4'-0 1/4"	1'-3 3/4"	5.28 SF	EA	1.25 SF	285	23.7%	RS2300
W2-L	12TH FLOOR PLAN	ARTS AND CRAFTS ROOM 1224A	4'-0 1/4"	1'-3 3/4"	5.28 SF	OAI	1.25 SF	285	23.7%	RS2300
W2-L	12TH FLOOR PLAN	CLASSROOM 1210A	4'-0 1/4"	1'-3 3/4"	5.28 SF	OAI	1.25 SF	510	23.7%	RS2300
W2-L	12TH FLOOR PLAN	CLASSROOM 1210A	4'-0 1/4"	1'-3 3/4"	5.28 SF	EA	1.25 SF	510	23.7%	RS2300
W2-L	12TH FLOOR PLAN	CLASSROOM 1211A	4'-0 1/4"	1'-3 3/4"	5.28 SF	OAI	1.25 SF	540	23.7%	RS2300
W2-L	12TH FLOOR PLAN	CLASSROOM 1211A	4'-0 1/4"	1'-3 3/4"	5.28 SF	EA	1.25 SF	540	23.7%	RS2300
W2-L	12TH FLOOR PLAN	CLASSROOM 1213A	4'-0 1/4"	1'-3 3/4"	5.28 SF	OAI	1.25 SF	525	23.7%	RS2300
W2-L	12TH FLOOR PLAN	CLASSROOM 1213A	4'-0 1/4"	1'-3 3/4"	5.28 SF	EA	1.25 SF	525	23.7%	RS2300
W6-L	12TH FLOOR PLAN	CLASSROOM 1225A	8'-0 1/2"	1'-3 3/4"	10.55 SF	EA(N) & OAI(S) each	1.25 SF	465	11.8%	RS2300
W6-L	12TH FLOOR PLAN	COMPUTER LABORATORY 1227A	8'-0 1/2"	1'-3 3/4"	10.55 SF	EA(N) & OAI(S) each	1.25 SF	300	11.8%	RS2300
L-0	13TH FLOOR PLAN	STAIRCASE VESTIBULE 1323A-1	2'-0"	8'-0"	16.00 SF					A4097
L-0	13TH FLOOR PLAN	STAIRCASE VESTIBULE 1323A-1	2'-0"	8'-0"	16.00 SF					A4097
L-2	13TH FLOOR PLAN	MECHANICAL ROOM 1309A(NORTH)	4'-8"	6'-4"	29.56 SF	OAI	11.50 SF	5750	38.9%	RS5700
L-2	13TH FLOOR PLAN	MECHANICAL ROOM 1309A(SOUTH)	4'-8"	6'-4"	29.56 SF	OAI	11.50 SF	5750	38.9%	RS5700
L-2	13TH FLOOR PLAN	MECHANICAL ROOM 1309A	4'-8"	6'-4"	29.56 SF	EA	14.50 SF	10100	49.1%	RS5700
L-0	14TH FLOOR PLAN	STAIRCASE VESTIBULE 1419A-1	2'-0"	8'-0"	16.00 SF					A4097
L-0	14TH FLOOR PLAN	STAIRCASE VESTIBULE 1419A-1	2'-0"	8'-0"	16.00 SF					A4097
L-2	15TH FLOOR PLAN	MECHANICAL ROOM FOR GYM 1501A(EAST)	4'-8"	6'-4"	29.56 SF	OAI	14.00 SF	7000	47.4%	RS5700
L-2	15TH FLOOR PLAN	MECHANICAL ROOM FOR GYM 1501A(WEST)	4'-8"	6'-4"	29.56 SF	OAI	16.00 SF	8000	54.1%	RS5700
L-2	15TH FLOOR PLAN	MECHANICAL ROOM FOR GYM 1501A(NORTH)	4'-8"	6'-4"	29.56 SF	EA	12.00 SF	6700	40.6%	RS5700
L-2	15TH FLOOR PLAN	MECHANICAL ROOM FOR GYM 1501A(SOUTH)	4'-8"	6'-4"	29.56 SF	EA	10.00 SF	6300	33.8%	RS5700
L-2	15TH FLOOR PLAN	SHELL SPACE	4'-8"	6'-4"	29.56 SF	EA	5.00 SF	2500	16.9%	RS5700
L-3	15TH FLOOR PLAN	NEW ELEVATOR SHAFT(EAST)	4'-1"	2'-4 1/16"	9.55 SF	EA	6.00 SF		62.8%	
L-3	15TH FLOOR PLAN	NEW ELEVATOR SHAFT(WEST)	4'-1"	2'-4 1/16"	9.55 SF	EA	6.00 SF		62.8%	
W2-L	15TH FLOOR PLAN	SHELL SPACE(EAST)	4'-0 1/4"	1'-3 3/4"	5.28 SF	EA	2.00 SF	1250	37.9%	RS2300
W2-L	15TH FLOOR PLAN	SHELL SPACE(WEST)	4'-0 1/4"	1'-3 3/4"	5.28 SF	EA	2.00 SF	1250	37.9%	RS2300
L-2	16TH FLOOR PLAN	SHELL SPACE(WEST)	4'-8"	6'-4"	29.56 SF	OAI	5.00 SF	2500	16.9%	RS5700
L-2	16TH FLOOR PLAN	MECHANICAL ROOM 1604A	4'-8"	6'-4"	29.56 SF	OAI	16.50 SF	11500	55.8%	RS5700
W2-L	16TH FLOOR PLAN	SHELL SPACE(EAST)	4'-0 1/4"	1'-3 3/4"	5.28 SF	EA	2.00 SF	1250	37.9%	RS2300
W2-L	16TH FLOOR PLAN	SHELL SPACE(SOUTH)	4'-0 1/4"	1'-3 3/4"	5.28 SF	EA	2.00 SF	1250	37.9%	RS2300

*NOTE
1. FOR EXACT LOUVER SIZE AND TYPE, SEE A-803A-2.

REVISED DRAWING 09/24/2015

NEW YORK STATE OF OPPORTUNITY. Office of General Services

DESIGN & CONSTRUCTION

CONSULTANTS:

RBSD ARCHITECTS P.C. | STV 100 Years

A Joint Venture
225 Park Avenue South
New York, New York 10003

WARNING:
THE ALTERATION OF THIS MATERIAL IN ANY WAY, UNLESS DONE UNDER THE DIRECTION OF A COMPARABLE PROFESSIONAL, I.E. ARCHITECT FOR AN ARCHITECT, ENGINEER FOR AN ENGINEER OR LANDSCAPE ARCHITECT FOR A LANDSCAPE ARCHITECT, IS A VIOLATION OF THE NEW YORK STATE EDUCATION LAW AND/OR REGULATIONS AND IS A CLASS 'A' MISDEMEANOR.

REGISTERED ARCHITECT WILLIAM B. SHAW

CONTRACT: CONSTRUCTION

TITLE: MAJOR BUILDING RENOVATIONS FOR THE MANHATTAN FORENSIC RELOCATION

LOCATION: MANHATTAN PSYCHIATRIC CENTER, BUILDING No. 102 600 EAST 125TH STREET WARDS ISLAND, NY10035

CLIENT: NYS OFFICE OF MENTAL HEALTH

MARK	DATE	DESCRIPTION
A8	09-24-2015	ADDENDUM # 8
A6	09-03-2015	ADDENDUM # 6
A5	08-12-2015	ADDENDUM # 5
	6-15-2015	BID DOCUMENT

PROJECT NUMBER: 44578
DESIGNED BY: MAK / WW
DRAWN BY: LR / LM / WW / JS / JM / DF / YB / YK
FIELD CHECK: N/A
APPROVED: WS / MAK / LF

SHEET TITLE: LOUVER SCHEDULE

BUILDING NUMBER: 102
DRAWING NUMBER: A-928-2
SHEET

9/23/2015 3:12:25 PM

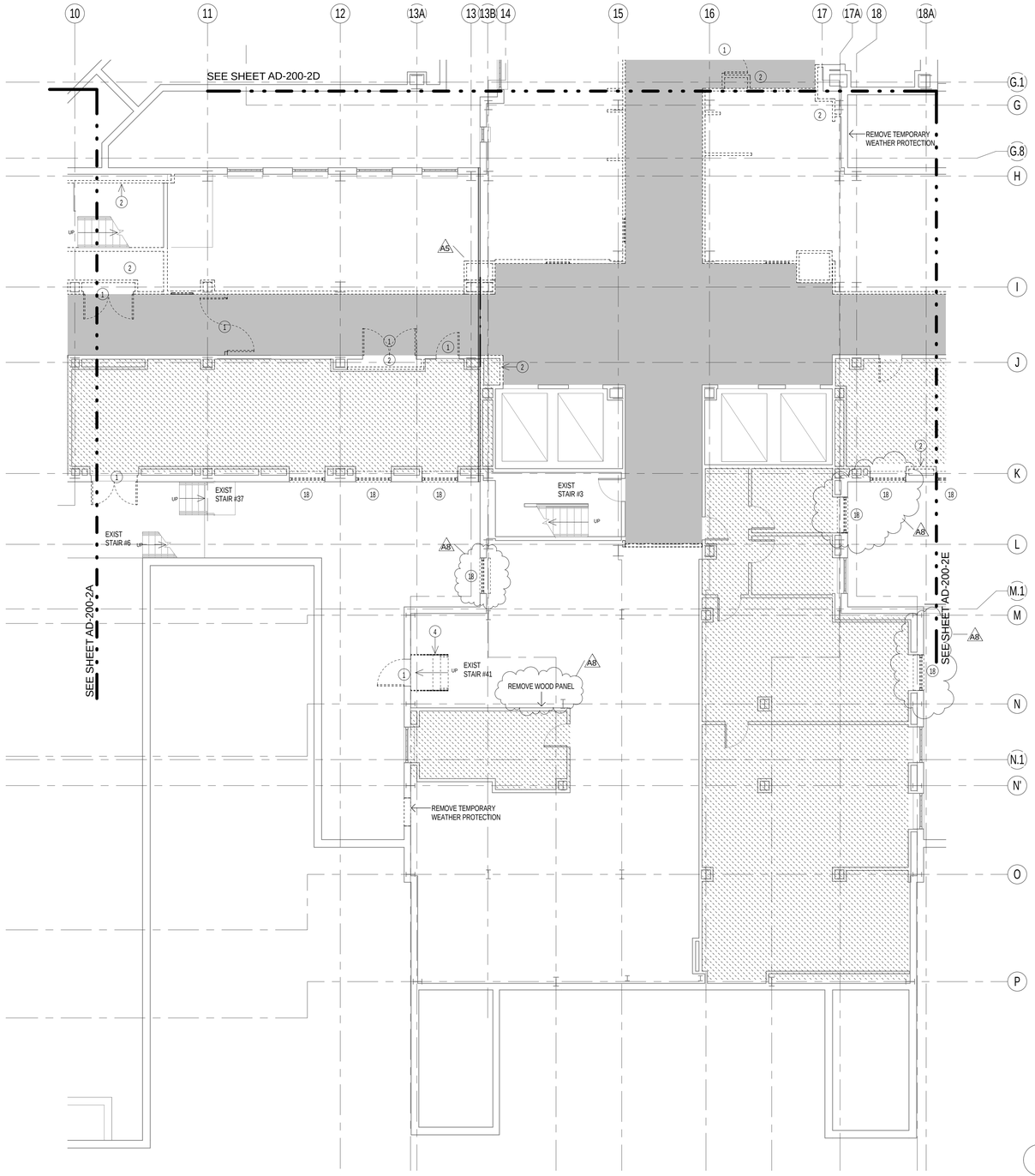

1 BASEMENT DEMOLITION2 PLAN, PART "C"

REVISED DRAWING 09/24/2015

DEMOLITION NOTES

1. ALL EXISTING WALLS LOCATED IN THE NORTH OF LINE 13 ARE MASONRY AS WELL AS ALL STAIR AND ELECTRIC CLOSETS ENCLOSURE. EXTERIOR WALLS ARE MASONRY AND BRICK AS DETAILED.
2. THE CEILINGS IN THE SOUTH OF LINE 14 ABOVE THE FIRST FLOOR ARE ACOUSTICAL TILE.
3. WHEN NEW WINDOWS/LOUVERS OR DOORS ARE INDICATED ON THE DRAWINGS, THE CONTRACTOR SHALL BE RESPONSIBLE TO REMOVE THE TEMPORARY PROTECTION.
4. DEMOLISH AREAS AS INDICATED AND COORDINATE WITH APPLICABLE ARCHITECTURAL DETAILS.
5. REMOVE ANY AND OR ALL REMAINING FURRING ALONG EXTERIOR WALLS, COLUMNS, OR OTHER LOCATIONS.
6. THE GENERAL CONTRACTOR SHALL COORDINATE VERTICAL SHAFT OPENING WITH THE MECHANICAL CONTRACTOR AND SAW CUT WHERE REQUIRED. ALSO COORDINATE WITH DT. A.823 AT BOTTOM OF SHAFTS.
7. DEMOLITION AND REPLACEMENT IN KIND WILL BE REQUIRED SOUTH OF LINE 13B TO ALLOW INSTALLATION OF NEW DUCT WORK AND NEW CEILING WHERE INDICATED ON AR DWGS.
8. THE CEILINGS ON THE BASEMENT CORRIDOR ARE PLASTER ABOVE THE HORIZONTAL SHAFT WAS TEMPORARY CEILING. A8
9. REMOVE ALL EXISTING FINISHES INCLUDING WOOD TRIM, ACRDYVN, SIGNAGE, CHAIR RAILS AND MESSAGE BOARD FROM EXISTING WALL WITHIN THE PROJECT AREA WHICH ARE SHOWN) TO REMAIN.

KEYED DEMOLITION NOTES

1. REMOVE EXISTING DOOR AND FRAMES AND RELATED HARDWARE. (COORDINATE DOOR REMOVAL WITH ASBESTOS ABATEMENT WORK)
2. REMOVE EXISTING WALL, PARTITIONS, WIRE MESH PARTITIONS SEE STRUCTURAL DWG.
3. REMOVE EXISTING RAILING/FENCE
4. REMOVE EXISTING STAIRCASE
7. REMOVE EXISITNG GYPSUM WALL BOARD PARTITIONS
8. REMOVE EXISTING ROOF
18. REMOVE EXISTING WINDOW
19. MAKE A NEW OPENING FOR NEW WINDOW OR LOUVER OR DOOR REFER DETAIL DWG
23. REMOVE TRANSOM OF THE WINDOW INSTALLED IN BID PACKAGE #1
24. REMOVE TRANSOM OF THE EXISTING WINDOW
25. REMOVE CANOPY
26. REMOVE EXISTING ACOUSTICAL TILE SUSPENDED CEILING, GRID SYSTEM, SUPPORTS, PLASTER CEILING, LATHE, BLACK IRON AND SUPPORTS
27. NEW SHAFT OR PIPE OPENING TO BE CUT OR CORE DRILLED IN NEW OR EXISTING SLAB AFTER COORDINATION WITH ARCHITECTURAL PARTITIONS AND MEP SHOP DRAWINGS(DO NOT CUT OR CORE DRILL THRU RIBS IN EXISTING SLAB). SEE ALSO STRUCTURAL DRAWING FOR NEW FRAMED OPENINGS IN BID PACKAGE 2.

SYMBOLS

- INDICATES EXISTING SPACES TO REMAIN
- INDICATES SHAFT OPENINGS TO BE SAW CUT IN THIS CONTRACT: FOR ACTUAL SCOPE & DETAILS, SEE STRUCTURAL DRAWINGS FOR THIS CONTRACT AND BP-1 REFERENCE DRAWINGS AND DEMOLITION NOTE 6 BELOW.
- INDICATES EXISTING OPENING
- REMOVE ALL EXISTING AND TEMPORARY CEILING, WALL, DOORS, LIGHTING, SPRINKLERS, DUCTWORK, AND LIFE SAFETY DEVICES. (SEE HAZARDOUS AND MEP DWGS FOR REMOVAL OF EXISTING WORK ABOVE TEMPORARY CORRIDOR)
- S DENOTES BOTTOM OF MECH. SHAFT OPENING, SEE PLANS FOR LOCATIONS (FILL ENTIRE SLAB THICKNESS SOLID AT BOTTOM OF MECH. SHAFT FLOOR OPENINGS WITHOUT STYROFOAM BLOCKOUT); SEE DRAWING 6/S-301-2.

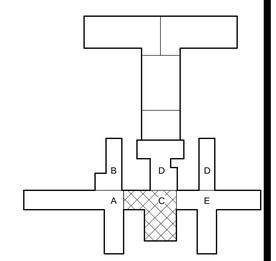

PROJECT NORTH

0 4' 8' 16'
SCALE: 1/8" = 1'-0"

NEW YORK STATE OF OPPORTUNITY. Office of General Services

DESIGN & CONSTRUCTION

CONSULTANTS:

RBSD ARCHITECTS P.C. | STV 100 Years

A Joint Venture

225 Park Avenue South
New York, New York 10003

WARNING:
THE ALTERATION OF THIS MATERIAL IN ANY WAY, UNLESS DONE UNDER THE DIRECTION OF A COMPARABLE PROFESSIONAL, I.E. ARCHITECT FOR AN ARCHITECT, ENGINEER FOR AN ENGINEER OR LANDSCAPE ARCHITECT FOR A LANDSCAPE ARCHITECT, IS A VIOLATION OF THE NEW YORK STATE EDUCATION LAW AND/OR REGULATIONS AND IS A CLASS 'A' MISDEMEANOR.

REGISTERED ARCHITECT WILLIAM G. BOLAN NO. 10503 STATE OF NEW YORK

CONTRACT: CONSTRUCTION

TITLE: MAJOR BUILDING RENOVATIONS FOR THE MANHATTAN FORENSIC RELOCATION

LOCATION: MANHATTAN PSYCHIATRIC CENTER, BUILDING No. 102
600 EAST 125TH STREET WARDS ISLAND, NY10035

CLIENT: NYS OFFICE OF MENTAL HEALTH

MARK	DATE	DESCRIPTION
A8	09-24-2015	ADDENDUM # 8
A6	09-03-2015	ADDENDUM # 6
A5	08-12-2015	ADDENDUM # 5
	6-15-2015	BID DOCUMENT

PROJECT NUMBER: 44578
DESIGNED BY: MAK / WW
DRAWN BY: LR / LM / WW / JS / JM / DF / YB / YK
FIELD CHECK: N/A
APPROVED: WS / MAK / LF

SHEET TITLE:
BASEMENT DEMOLITION PLAN, PART "C"

BUILDING NUMBER: 102
DRAWING NUMBER: AD-200-2C
SHEET

9/23/2015 7:10:30 PM

FINISH SCHEDULE

	CODE	PRODUCT	MANUFACTURER	COLLECTION/ MODEL #	COLORS	SIZE & FINISH	REMARKS
WALLS	P-1	PAINT	SHERWIN WILLIAMS	HARMONY	SW 7012 CREAMY	EG-SHEL, U.O.N.	FIELD WALL PAINT BASEMENT -9
	P-2	PAINT	SHERWIN WILLIAMS	HARMONY	SW 6107 NOMADIC DESERT	EG-SHEL, U.O.N.	ACCENT WALL PAINT ON FLOORS BASEMENT - 2 / ACTIVITY ROOM ON FLOORS 3-11
	P-3	PAINT	SHERWIN WILLIAMS	HARMONY	SW 6403 ESCAPADE GOLD	EG-SHEL, U.O.N.	ACCENT WALL PAINT ON FLOORS 3-5
	P-4	PAINT	SHERWIN WILLIAMS	HARMONY	SW 6683 BEE	EG-SHEL, U.O.N.	ACCENT WALL PAINT ON FLOORS 6-9
	P-5	PAINT	SHERWIN WILLIAMS	HARMONY	SW 6256 SERIOUS GRAY	EG-SHEL, U.O.N.	ACCENT WALL PAINT ON FLOORS 10-11
	P-6	PAINT	SHERWIN WILLIAMS	HARMONY	SW 6500 OPEN SEAS	EG-SHEL, U.O.N.	ACCENT WALL PAINT ON FLOORS 12-14
	P-7	PAINT	SHERWIN WILLIAMS	HARMONY	SW 7036 ACCESSIBLE BEIGE	EG-SHEL, U.O.N.	FIELD WALL PAINT IN PATIENT ROOM
	P-8	PAINT	SHERWIN WILLIAMS	DTM ACYLIC COATING (A8)	SW 7012 CREAMY	SEMI-GLOSS	DOOR / DOOR FRAME PAINT BASEMENT-FL 9; USE W/ SW PRO-CRYL UNIVERSAL PRIMER (A8)
	P-9	PAINT	SHERWIN WILLIAMS	HARMONY	SW 6379 JERSEY CREAM	EG-SHEL, U.O.N.	ACCENT WALL PAINT IN VISITING ROOM ON FLOOR 1
	P-10	PAINT	SHERWIN WILLIAMS	HARMONY	SW 0073 CHARTREUSE	EG-SHEL, U.O.N.	ACCENT WALL PAINT IN STAFF LOUNGE
	P-11	PAINT	SHERWIN WILLIAMS	HARMONY	SW 6163 GRASSLAND	EG-SHEL, U.O.N.	ACCENT WALL PAINT IN WAITING ROOM ON FLOOR 1
	P-12	PAINT	SHERWIN WILLIAMS	HARMONY	TBD	EG-SHEL, U.O.N.	ACCENT WALL PAINT AT RECEPTION ON FLOOR 2
	P-13	NOT USED					
	P-14	PAINT	SHERWIN WILLIAMS	HARMONY	SW 0075 HOLIDAY TURQUOISE	EG-SHEL, U.O.N.	FIELD WALL PAINT IN RECREATION ROOM ON FLOORS 12-14
	P-15	PAINT	SHERWIN WILLIAMS	HARMONY	SW 6528 COSMOS	EG-SHEL, U.O.N.	FIELD WALL PAINT IN WEIGHT ROOM ON FLOOR 14
	P-16	PAINT	SHERWIN WILLIAMS	HARMONY	SW 7005 PURE WHITE	EG-SHEL, U.O.N.	CEILING PAINT, FIELD WALL PAINT ON FLOORS 10-14, U.O.N. (A8)
	P-17	PAINT	SHERWIN WILLIAMS	DTM ACRLIC COATING (A8)	SW 7005 PURE WHITE	SEMI-GLOSS	DOOR / DOOR FRAME PAINT 10-14; USE W/ SW PRO-CRYL UNIVERSAL PRIMER
	P-18	PHOTOLUMINESCENT PAINT	EVERGLOW	TL300 EPOXY COATING KITS	-	-	PAINT STRIPES APPLIED TO FLOOR, WALLS & HANDRAILS AT EGRESS STAIRS
	P-19 (A8)	PAINT	SHERWIN WILLIAMS	DTM ACYLIC COATING	SW 6909 LEMON TWIST	SEMI-GLOSS	STAIR HAND RAIL/UNDERSIDE-STAIR/GATE/ STRINGER; USE W/ SW PRO-CRYL UNIV. PRIMER
	Z-1	MULTICOLOR INTERIOR COATING	ZOLATONE	FLEX	FLX 0029		FIELD WALL PAINT IN CORRIDORS 3-9
	Z-2	MULTICOLOR INTERIOR COATING	ZOLATONE	FLEX	PLX-01024		FIELD WALL PAINT IN CORRIDORS 10-14
	WC-1	WALLCOVERING	TRIKES	LANARK WALLCOVERING	STRAND, TBD		WALLCOVERING IN RECEPTION & CORRIDOR AREAS
	WC-2	WALLCOVERING	KOROSEAL	PATANA	TBD		WALLCOVERING IN CONFERENCE ROOM
	WC-3	WALLCOVERING	TRIKES	LANARK WALLCOVERING	CAPULET, TBD		WALLCOVERING IN EXECUTIVE OFFICES
	WP-1	HIGH IMPACT WALL PROTECTION	C/S ACROVYN		#704, BRAZILIAN NUT		PATIENT ROOM DOORS ON FLOORS 3-11/ VERTICAL SURFACE FOR RECEPTION DESK
	WP-2	HIGH IMPACT WALL PROTECTION	C/S ACROVYN	ACROVYN BY DESIGN	CUSTOM PRINTED		ACCENT WALL IN ELEVATOR LOBBY, OBSERVATION POSTS & YOGA RM; IMAGES WILL VARY
	WP-3	HIGH IMPACT WALL PROTECTION	C/S ACROVYN		#410, BRUSHED SILVER		APPLIED TO VERTICAL SURFACE OF NURSES' STATION
	CG	HIGH IMPACT CORNER GUARD	C/S ACROVYN	ACROVYN 4000, VA SERIES 250N	#934, PEARL	SUEDE TEXTURE	
	PE	HIGH IMPACT PARTITION END	C/S ACROVYN	ACROVYN 4000, VA SERIES 250N	#934, PEARL	SUEDE TEXTURE	
	WG-1	HIGH IMPACT WALL PROTECTION	C/S ACROVYN	ACROVYN 4000, FR-225	#934, PEARL	SUEDE TEXTURE	CRASH RAIL WALL GUARD APPLIED TO OBSERVATION POSTS DESK & IN DINING ROOM
	PW-1	PADDED WALL	MARATHON ENG. CORP.	GOLD MEDAL SAFETY PADDING	TBD		PADDED WALL & FLOORS IN SECLUSION ROOMS
	PW-2	GYM PAD WALL	DRAPER	ECOVISION CLASS A FLAME RETARDANT WALL PADS	NAVY BLUE	MATCH WITH WN HEIGHT	APPLIED WALL PAD CUT OUT TRIM FOR OUTLET IF NECESSARY
	PWT-1	PORCELAIN WALL TILE	DALTILE	EVER	EV01, MOON	16" x 24", LIGHT POLISHED	FIELD WALL TILE IN TOILET (A)
	PWT-3	PORCELAIN WALL TILE	DALTILE	EVER	EV05, EARTH	8" x 24" x 0.313", LIGHT POLISHED	ACCENT WALL TILE IN STAFF TOILET (B)
	PWT-2	PORCELAIN WALL TILE	DALTILE	EVER	EV04, ROCK	8" x 24" x 0.313", LIGHT POLISHED	ACCENT WALL TILE IN PATIENT TOILET (C)
	WB-1	RUBBER WALL BASE	ROPPE	PINNACLE PLUS, #35	122, NATURAL	4-9/16" X 1/4"	TYPICAL WALL BASE IN OFFICE ON FLOOR 2
	WB-2	RUBBER WALL BASE	ROPPE	PINNACLE PLUS, #35	114, LUNAR DUST	4-9/16" X 1/4"	TYPICAL WALL BASE IN STORAGE, FILE & IT ROOM
	WB-3	RUBBER WALL BASE	ROPPE	PINNACLE PLUS, #35	140, FAWN	4-9/16" X 1/4"	TYPICAL WALL BASE IN COURT ROOM
	WB-4	WOOD WALL BASE	C/S ACROVYN	SARATOGA SERIES, WALL BASE TRIM, MITERED	#372 CLASSIC MAPLE		TYPICAL WALL BASE IN EXECUTIVE AREA ON FLOOR 2
	WB-5	RUBBER WALL BASE	ROPPE	PINNACLE PLUS, #35	193, BLACK BROWN	4-9/16" X 1/4"	TYPICAL WALL BASE FOR RECEPTION DESK & OBSERVATAION POST
	WB-6 (A6)	PREFORMED COVE BASE	MANNINGTON	BIOSPEC	15349 STEEL BLUE	4"	SHEET VINYL COVE BASE IN BARBER SHOP
FLOORS	FT-1	TERRAZZO TILE	FRITZTILE		C521590, SHEER GRAY FLAT	12" x 12" x 0.18"(3/16")	TYPICAL FLOORING IN ELEVATOR AREA
	FT-2	TERRAZZO TILE	FRITZTILE		C521595, ROMAN GRAY FLAT	12" x 12" x 0.18"(3/16")	TYPICAL FLOORING BORDER IN 1ST/2ND FL. LOBBY AREAS
	VT-1	VINYL TILE	ROPPE	SAFETCORK	#W198, WHITE IVORY (A5)	36" x 36" x 0.08"	TYPICAL FLOORING IN CORRIDORS ON FLOORS 3-9
	VT-2	VINYL TILE	ROPPE	SAFETCORK	#W197, WHITE ICEBERG	36" x 36" x 0.08"	TYPICAL FLOORING IN CORRIDORS ON FLOORS 1, 10-14
	VT-3	VINYL TILE	ROPPE	SAFETCORK	#W154, SALEM BLUE	36" x 36" x 0.08"	ACCENT FLOORING IN CORRIDORS ON FLOORS 12-14
	VT-4	VINYL TILE	ARMSTRONG	STRIATIONS BBT	T3614, BISQUE	12" x 24" x 0.125"	TYPICAL FLOORING IN EXAM & TREATMENT ROOM/ STUDENT LOUNGE
	VT-5	VINYL TILE	ARMSTRONG	STRIATIONS BBT	T3612, STARDUST	12" x 24" x 0.125"	TYPICAL FLOORING IN STORAGE, FILE, IT ROOM, LOCKER & PATIENT LAUNDRY
	VT-6	VINYL TILE	ROPPE	STATDEFEND	#702, ELECTRON BEIGE	36" x 36" x 0.08"	TYPICAL FLOORING IN CORRIDOR ON BASEMENT, MIS ROOMS AS NOTED (A8)
	VT-7	VINYL TILE	ROPPE	STATDEFEND	#753, STRATUS BLUE	36" x 36" x 0.08"	TYPICAL FLOORING IN BUILDING 106
	VT-8	METAL STUDDED RUBBER TILE	CANAL RUBBER	STAINLESS STEEL STUDDED RUBBER TILE		12" x 12" x 1/8"	TYPICAL FLOORING IN NEW ELEVATOR CABS
	VS-1	VINYL SHEET	MANNINGTON	BIOSPEC	15397, PALM	x 0.08"	ACCENT FLOORING IN CORRIDORS ON FLOORS 3-5
	VS-2	VINYL SHEET	MANNINGTON	BIOSPEC	15356, JONQUIL	x 0.08"	ACCENT FLOORING IN CORRIDORS ON FLOORS 6-9
	VS-3	VINYL SHEET	MANNINGTON	BIOSPEC	15349, STEEL BLUE	x 0.08"	ACCENT FLOORING IN CORRIDORS ON FLOORS 10-11/ BARBER SHOP
	GF-1	GYM FLOOR	LONSEAL	LONWOOD WITH FOAM	TBD		TYPICAL FLOORING IN EXERCISE/YOGA & WEIGHT ROOMS
	GF-2	GYM FLOOR	LONSEAL	LONCOURT I	1 MAPLE		TYPICAL FLOORING IN GYMNASIUM
	LVT-1	LUXURY VINYL PLANK	ADORE	DECORIA	MA-M001	7" X 48" x 0.12"	TYPICAL FLOORING IN ALL PATIENT BEDROOMS
	LVT-2	LUXURY VINYL PLANK	ADORE	DECORIA	MA-M003	7" X 48" x 0.12"	TYPICAL OFFICE FLOORING ON FLOOR 3-14
	LVT-3	LUXURY VINYL TILE	MANNINGTON	NATURE'S PATH PARALLELS	# 12203, LINEN	18" X 18" x 0.10"	TYPICAL FLOORING IN STAFF LOUNGE AND CONFERENCE ROOM
	LVT-4	LUXURY VINYL TILE	MANNINGTON	NATURE'S PATH PARALLELS	# 12204, STONEWASHED	18" X 18" x 0.10"	TYPICAL FLOORING ON FLOOR 2, CORRIDOR
	LVT-5	LUXURY VINYL TILE	MANNINGTON	NATURE'S PATH PARALLELS	# 12205, BEACH GRASS	18" X 18" x 0.10"	TYPICAL FLOORING IN OFFICES ON BASEMENT AND FLOOR 2
	TT-1	FLOOR TRANSITION	ROPPE	PART #59	TBD	1/8" - 0.08""	VINYL TILE - VINYL TILE/ MATCH COLOR WITH ADJACENT FINISHES
	TT-2	FLOOR TRANSITION	ROPPE	PART #65	184 ALMOND	1/4" - 1/8"	VINYL TILE - FRITZTILE
	TT-3	FLOOR TRANSITION	SCHLUTER SYSTEMS	RENO - U ALUMINUM TRANSITION STRIP - SCHIENE	STAINLESS STEEL		CARPET - FRITZTILE
	TT-4	FLOOR TRANSITION	SCHLUTER SYSTEMS	MARBLE SADDLE	WHITE MARBLE	--	PORCELAIN TILES TO VINYL TILE/ APPLIED TO TOILET TRANSITION
	TT-6 (A8)	EXPANSION JOINT SYSTEM	INPRO		TBD		MATCH COLOR WITH ADJACENT FINISHES. SEE A-810 FOR DETAILS
	RT-1 (A6)	RIBBED RUBBER INSERT	ROPPE	LL	SAFETY YELLOW	2" X 1/8"	COURT ROOM 167B & VISITING ROOM 106A STEPS
	RT-2	SAFETY NOSING	WOOSTER	SUPERGRIT SAFETY TREAD TYPE 121BF		1-7/8"	ALL CONCRETE STEEL PAN STAIRS TO HAVE SAFETY NOSING
	EP-1	EPOXY	SHERWIN WILLIAMS	GENERAL POLYMERS 3745 & POLYURETHANE 4409	SW 6256 SERIOUS GRAY (A8)		APPLIED TO MECH. ROOM/ ELEC. ROOM/ STAIRS/ EX. SERV ELEV CORR
	(A6)						
	EP-2 (A8)	EPOXY (NON-SKID)	SHERWIN WILLIAMS	GEN. POL. 3745 & GEN. POL. 5191 ADDITIVE & POLY 4409	SW 6256 SERIOUS GRAY	1-1/8"" DEPTH	APPLIED TO STAIRS/ STAIRCASE VESTIBULE
	WM-1	WALK-OFF MAT	C/S ACROVYN	GRIDLINE	MILL (STANDARD)	6" X 18" x 0.313"	APPLIED TO 101A & 165B VESTIBULES
	PFT-1	PORCELAIN FLOOR TILE	DALTILE	COLOR SCHEME/ LINEAR	B903, BISCUIT SOLID STD	2" X 2" x 0.25"	FIELD FLOOR TILE IN TOILET
	PFT-2	PORCELAIN FLOOR TILE	DALTILE	COLOR BODY / KEYSTONES	D161, URBAN PUTTY		ACCENT FLOOR TILE IN TOILET
	PW-1	PADDED FLOOR	MARATHON ENG. CORP.	GOLD MEDAL SAFETY PADDING	TBD	19.6" X 19.6" X 0.11" (50CM X 50CM X 2.8MM)	PADDED WALL & FLOORS IN SECLUSION ROOMS
	C-1	CARPET	INTERFACE	3000 SERIES COLLECTION - S303	100146 DOVE	19.6" X 19.6" X 0.142" (50CM X 50CM X 3.6MM)	FLOORING IN COURT ROOM & JUDGE'S CHAMBERS
	C-2	CARPET	INTERFACE	TONGUE IN GROOVE (A5)	100726 SYCAMORE	19.6" X 19.6" X 0.142" (50CM X 50CM X 3.6MM)	FLOORING IN 1st FL & 2nd FL CONFERENCE ROOMS
	C-3	CARPET	INTERFACE	2000 SERIES COLLECTION - S201	9798 SAGE	19.6" X 19.6" X 0.086" (50CM X 50CM X 2.2MM)	FLOORING IN EXECUTIVE OFFICES
	C-4	CARPET	INTERFACE	1000 SERIES COLLECTION - S102	9541 SAGE		FLOORING IN EXECUTIVE CORRIDOR & RECEPTION
MISC.	SS-1	SOLID SURFACE MATERIAL	DUPONT CORIAN	PRIVATE COLLECTION	CAMEO WHITE	1/4" THICKNESS	LIMITED COLORS AVAILABLE IN 1/4" THICK
	SS-2	SOLID SURFACE MATERIAL	DUPONT CORIAN	PRIVATE COLLECTION	CLAM SHELL		APPLIED TO COUNTERTOP AT PANTRY / EXAM ROOM
	HW-1	MAPLE WOOD VENEER STAIN	SHERWIN WILLIAMS	WOOD CLASSICS	PEARWOOD SW 3121-B		APPLIED TO COURT ROOM JUDGE STATION MAPLE VENEER, TOP RAIL & STAIR TREADS
	PL-2	PLASTIC LAMINATE	NEVAMAR	ARMORED PROTECTION	W8325T - SOVEREIGN CHERRY		APPLIED TO WRITING COUNTER OF RECEPTION DESK, OBSERV STATION & DISP COUNTER
	PL-3	PLASTIC LAMINATE	MIDMARK	WOODGRAINS	HAYWOOD CHERRY		APPLIED TO CABINETRY AT PANTRY / EXAM ROOM

FINISH SCHEDULE

	CODE	PRODUCT	MANUFACTURER	COLLECTION/ MODEL #	COLORS	SIZE & FINISH	REMARKS
CEILINGS	ACT-1	ACOUSTIC CEILING TILE	ARMSTRONG OR	OPTIMA TEGULAR	WHITE	24" X 24"	9/16" SUPRAFINE, SQUARE LAY IN TEGULAR FIELD PANEL (FINE TEXTURE)
			USG	HALCYON 98221	WHITE	24" X 24"	DONN DXT CENTRICITEE 9/16" SUSPENSION GRID
	ACT-2	ACOUSTIC CEILING TILE	ARMSTRONG	METALWORKS CLIP-ON	WHITELUME	24" X 24"	1. SUSPENSION SYSTEM : 15/16" PRELUDE XL CROSS TEE AND 7301 MAIN BEAM, HEAVY DUTY (HD) 2. PERFORATION OPTIONS : M16(Rd 1607), NRC 0.70 WITH ACOUSTICAL FLEECE AND 1" FIBERGLASS INFILL 8200100 3. PANEL : METALWORKS WHITELUME (WHA), BUTT JOINT 7110. ACCESSIBLE PANELS WILL BE 1/8" REAVEAL 7140. THE ACCESSIBLE HOLE AT THE ACCESSIBLE PANEL TO BE FITTED WITH SET IN SCREWS COUNTERSUNK, PROVIDED BY GC. SCREWS SHOULD BE 5/16" IN DEPTH OR SHORTER. 4. ACCESSORIES : (a) PROVIDE 7119 OR 7120 FIXTURE FRAME FOR LIGHT FIXTURES AND DIFFUSERS. (b) WALL MOLDING TO BE 7112 BOX MOLDING WITH 7113 SPREADER HOLD DOWN. (c) ALL ACCESSORIES SHALL BE WHITE. (d) ALL SUSPENSION GRID SHALL BE HEAVY DUTY (HD).
			ROCKFON	SPANAIR CLIP-IN PANELS			
	ACT-4 (A5)	ACOUSTIC CEILING TILE	ARMSTRONG	DUNE	WHITE	24" X 48"	SQUARE LAY IN (FINE TEXTURE), 15/16" PRELUDE XL, HEAVY DUTY 7301, WALL MOLDING TO BE 7112 BOX MOLDING WITH 7113 SPREADER HOLD DOWN. ALL ACCESSORIES SHALL BE WHITE (A8)
	ACT-5	ACOUSTIC CEILING TILE	ARMSTRONG	OPTIMA TEGULAR	WHITE	12" X 48",24" X 48"	
	ACT-9	ACOUSTIC CEILING TILE	ARMSTRONG	TECHZONE OPTIMA/3257,3257PB	WHITE	24" X 48"	9/16" SUPRAFINE XL, SQUARE TEGULAR
				TECHZONE OPTIMA/1403	WHITE	6" X 48"	9/16" SUPRAFINE XL, SQUARE TEGULAR
			USG	HALCYON 98198, 98245	WHITE	24" X 48", 6" X 48"	DONN DXT CENTRICITEE 9/16" SUSPENSION GRID
	GWB-1	GYPSUM BOARD					APPLIED TO STAFF AREA
	GWB-2	VERY HIGH IMPACT GYPSUM BOARD	USG	SHEETROCK MOLD TOUGH VERY HIGH IMPACT (VHI)			APPLIED TO PATIENT AREA

NOTES:
1. ALL EXISTING CONDITIONS TO BE PATCHED AND CLEANED
2. REMOVE ALL EXISTING FLOOR, WALL BASE, WALL AND CEILING FINISHES AND REPLACE WITH NEW.
3. ALL WALL BASE TO BE CONTINUOUS WITHOUT CUTS IN BETWEEN DOOR JAMS
4. SCHLUTER SYSTEMS TO BE INCORPORATED IN ENTIRE FLOORS AND WALLS WITHIN PATIENT TOILETS, PATIENT TOILETS/ SHOWERS, GANG - TOILETS AND NON-PATIENT SHOWERS. SCHLUTER SYSTEMS SHELL BE APPLIED TO FLOOR AND TO FULL HEIGHT WALL. SEE DRAWING A-815 FOR DETAIL INFORMATION.
5. SELF LEVELING COMPOUND THROUGHOUT TO PREPARE ALL NEW FINISHES. SHOT BLAST EXISTING AND PREP/PRIME AS PER MANUFACTURER'S RECOMMENDATION. NO LESS THAN 1/4"; AVERAGE 1/2" REFER TO SPECIFICATION FOR PREPARATION DETAILS.
6. ALL PORCELAIN TILE GROUT JOINTS SHALL MATCH PWT-1.
7. ALL EXAM ROOMS AND TREATMENT ROOMS SHALL INCLUDE PRIVACY CURTAIN: ARC COM LUNAR-X AC-33162X (SPRING #3). ALL PRIVACY CURTAINS SHALL BE INSTALLED WITH INPRO POP OUT CARRIERS.
8. FOR WG-1 OBSERVATION POST INSTALLATION HEIGHTS, REFER TO DRAWINGS A-908-2/3 . WG-1 INSTALLATION HEIGHT IN DINING ROOMS IS 36" A.F.F.
9. WG-1 SHALL BE INSTALLED WITH TAMPER PROOF SCREWS.
10. WG-1 SHALL BE INSTALLED ON OBSERVATION POST DESKS, IN PASSAGE WAY FROM THE ELEVATOR BANKS TO THE DINING ROOMS, IN THE DINING ROOMS & IN CART NICHES.
11. ENDURA GAME LINE GYM FLOOR PAINTS SHALL BE USED FOR COURT LINE MARKINGS ON THE GYM FLOOR, AS RECOMMENDED BY LONSEAL. ENDURA PAINT SHALL BE APPLIED BY A CERTIFIED LINE PAINTER. NAMES OF CERTIFIED PAINTERS TO BE PROVIDED BY ENDURA LOCAL MANUFACTURER'S REPRESENTATIVE. GAME LINES ARE SCHEMATIC. THE GYM 1420A ROOM SIZE IS NOT LARGE ENOUGH TO SUPPORT A REGULATION BASKETBALL COURT; THEREFORE, THE GAME LINES ARE CLOSER IN DISTANCE. (A5)
12. REVEAL SHALL BE INSTALLED WITH TAMPER PROOF SCREWS. APPLIED TO CORRIDORS AND COURT ROOM WALLS.
13. CG-1 SHALL BE INSTALLED WITH SELF ADHESIVE TAPE.
14. PW-2 SHALL BE INSTALLED WITH TAMPER PROOF SCREWS.
15. ALL PAINT SHALL BE PAINTED ONE PRIMER AND TWO COATS OF PAINT.
16. ALL SHEETROCK SHALL BE LEVEL 4 FINISH.
17. ALL EXISTING PAINTED WALLS IN STAIRS AND OTHER LOCATIONS TO BE PROPERLY PREPARED BEFORE RECEIVING NEW PAINT PRODUCTS. ALL ATTACHMENTS INCLUDING SIGNS, BOARDS, WALLCOVERING, WALL PROTECTION, WALL PANELING, OUTLET/DATA/LIGHT SWITCH COVERS TO BE REMOVED PRIOR TO PAINTING. CRACKS TO BE FILLED WITH JOINT COMPOUND AND SANDED SMOOTH - THIS PROCEDURE TO BE REPEATED UNTIL DESIRED SMOOTHNESS IS ACHIEVED. SURROUNDING WALLS TO BE SANDED SMOOTH AND SPACKLE AS WELL BEFORE RECEIVING PRIME COAT. REFER TO SPEC SECTION 099101. AREAS TO INCLUDE, BUT NOT LIMITED TO: ELEVATOR LOBBY 000B, EX. ELEVATOR LOBBY, VESTIBULE 110B/CORRIDOR 110B-1, LOBBY 251B/CORRIDOR 251B-1, CORRIDOR 007B. (A8)
18. WM-1 SHALL BE INSTALLED WITH TAMPER PROOF SCREWS.
19. ALL EXISTING DOORS AND DOOR FRAMES TO BE CLEANED, EVENLY SANDED DULL AND PAINTED. REMOVE ALL HARDWARE PRIOR TO PAINTING AND REINSTALL. (A8)
20. ALL STEEL IN EXISTING STAIRWELL TO BE GRIT BLASTED, PRIMED AND PAINTED (2 COATS). REMOVE RUST PRIOR TO APPLYING PRIMER. SEE MANUFACTURER'S RECOMMENDATION FOR INSTALLATION.
21. FOR METAL STAIR FLOOR APPLICATION, PRIME WITH SHERWIN WILLIAMS MACROPOXY 646. FOR CONCRETE STAIR APPLICATION, PRIME WITH SHERWIN WILLIAMS GENERAL POLYMER 3579 STANDARD PRIMER. SEE MANUFACTURER'S RECOMMENDATION FOR INSTALLATION.
22. FOR EP-2 INSTALLATION, NON-SKID ADDITIVES TO BE BROADCAST IN GENERAL POLYMER 3745, THEN APPLY POLYURETHANE 4409 TOP COAT. SEE MANUFACTURER'S RECOMMENDATIONS FOR INSTALLATION.

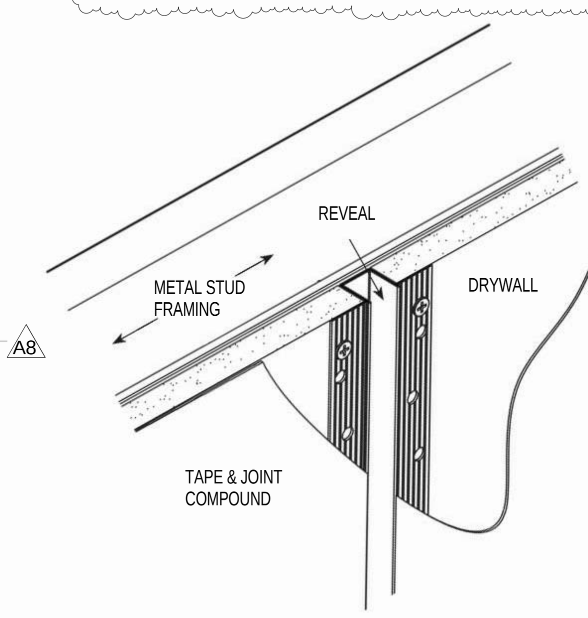

1 REVEAL MOLDING DETAIL
SCALE: NOT IN SCALE

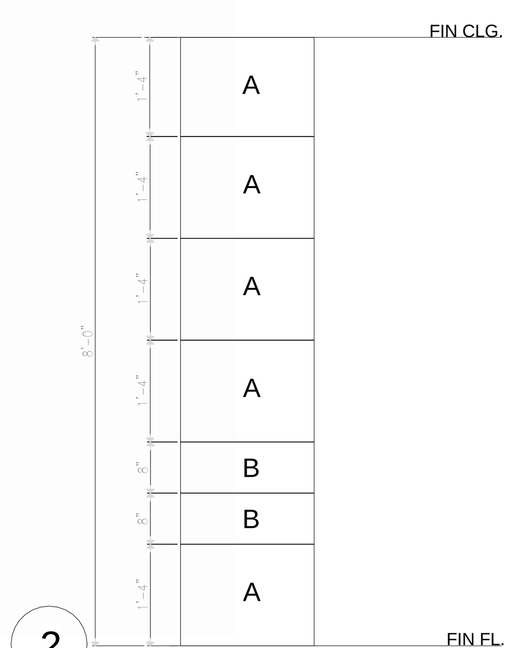

2 STAFF TOILET WALL TILE PATTERN
SCALE: 1/2" = 1'-0"

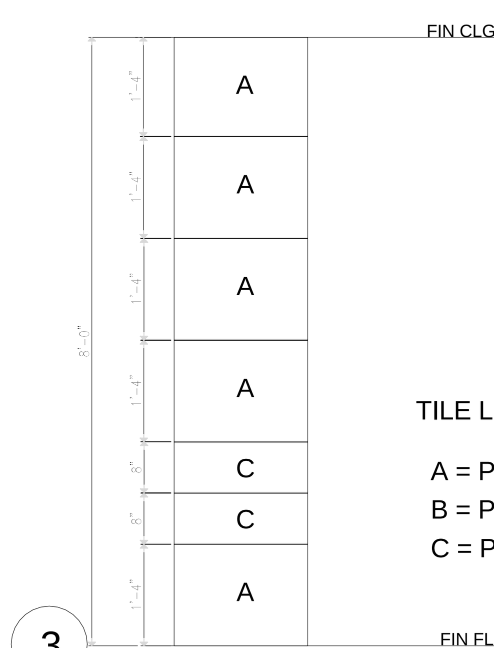

3 PATIENT TOILET WALL TILE PATTERN
SCALE: 1/2" = 1'-0"

TILE LEGEND
A = PWT-1
B = PWT-2
C = PWT-3

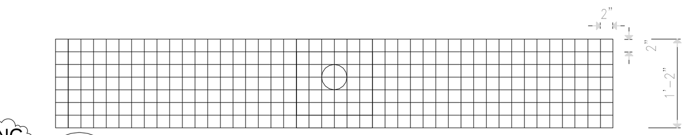
4 TYPE A - TOILET MOSAIC TILE
SCALE: 1/2" = 1'-0"

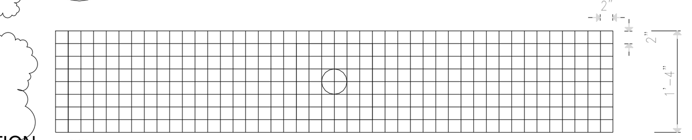
5 TYPE B - TOILET MOSAIC TILE
SCALE: 1/2" = 1'-0"

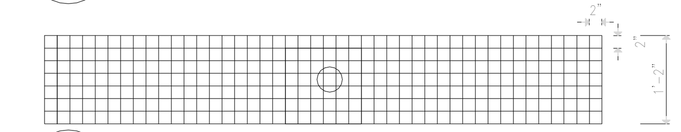
6 TYPE C - TOILET MOSAIC TILE
SCALE: 1/2" = 1'-0"

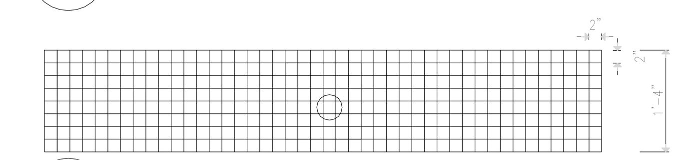
7 TYPE D - TOILET MOSAIC TILE
SCALE: 1/2" = 1'-0"

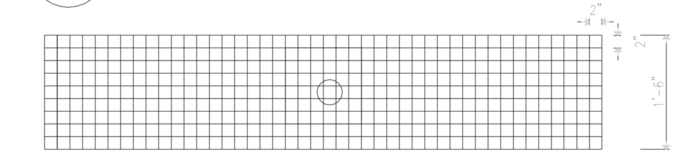
8 TYPE E - TOILET MOSAIC TILE
SCALE: 1/2" = 1'-0"

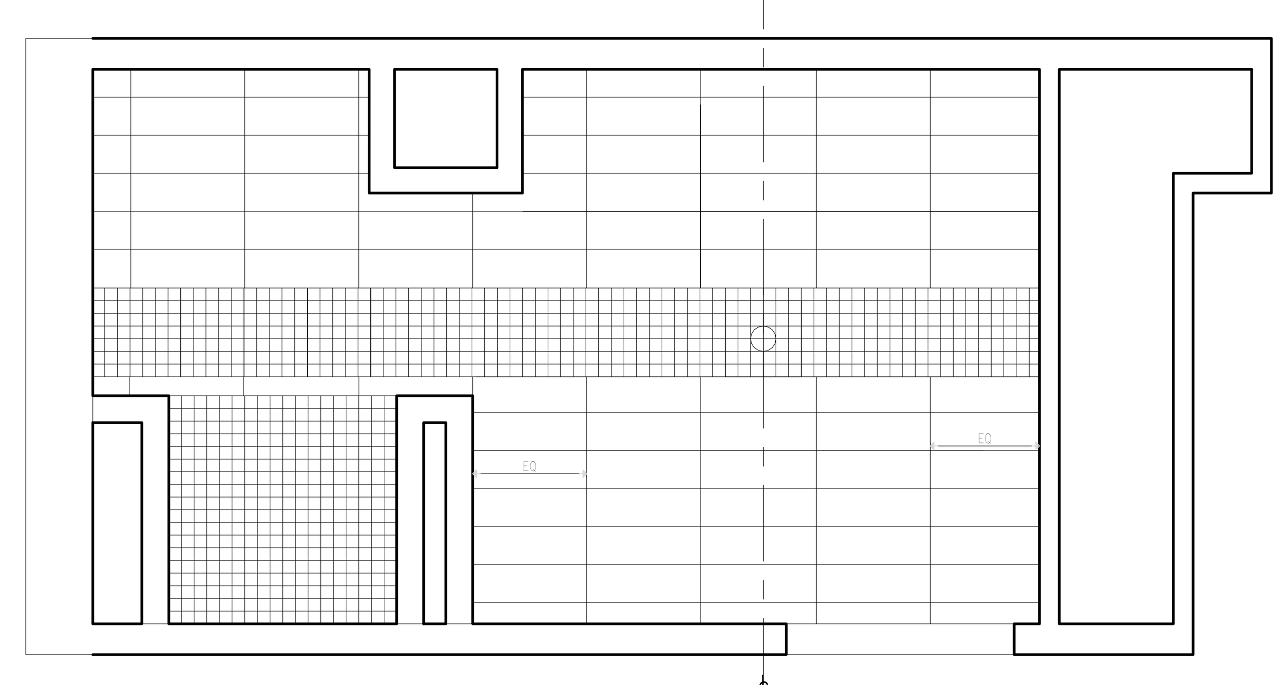
9 STAFF TOILET FLOOR TILE PATTERN
SCALE: 1/2" = 1'-0"

TILE LEGEND
□ = PFT-1
= PFT-2

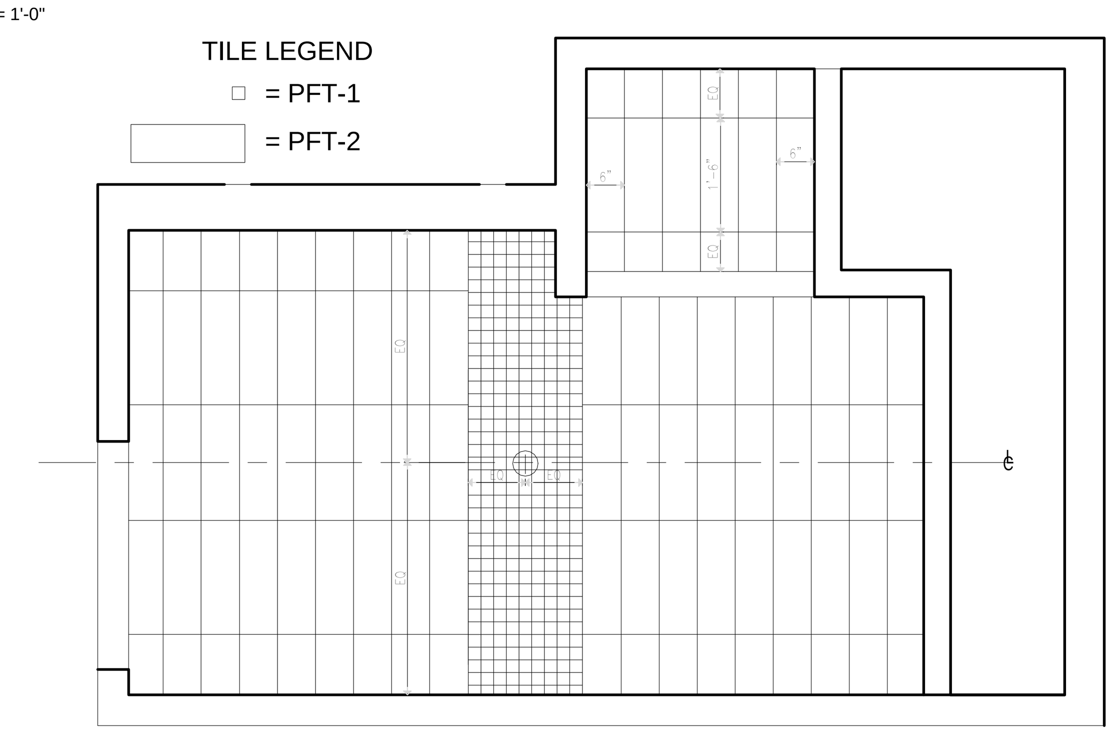
10 PATIENT TOILET FLOOR TILE PATTERN
SCALE: 1/2" = 1'-0"

0 8' 16' 32'
SCALE: As indicated

REVISED DRAWING 09/24/2015

NEW YORK STATE OF OPPORTUNITY. | Office of General Services
DESIGN & CONSTRUCTION

CONSULTANTS:
RBSD ARCHITECTS P.C. | STV 100 Years
A Joint Venture
225 Park Avenue South
New York, New York 10003

WARNING:
THE ALTERATION OF THIS MATERIAL IN ANY WAY, UNLESS DONE UNDER THE DIRECTION OF A COMPARABLE PROFESSIONAL, I.E. ARCHITECT FOR AN ARCHITECT, ENGINEER FOR AN ENGINEER OR LANDSCAPE ARCHITECT FOR A LANDSCAPE ARCHITECT, IS A VIOLATION OF THE NEW YORK STATE EDUCATION LAW AND/OR REGULATIONS AND IS A CLASS 'A' MISDEMEANOR.

REGISTERED ARCHITECT WILLIAM B. SELAN STATE OF NEW YORK No. 105...

CONTRACT: CONSTRUCTION
TITLE: MAJOR BUILDING RENOVATIONS FOR THE MANHATTAN FORENSIC RELOCATION
LOCATION: MANHATTAN PSYCHIATRIC CENTER, BUILDING No. 102 600 EAST 125TH STREET WARDS ISLAND, NY10035
CLIENT: NYS OFFICE OF MENTAL HEALTH

MARK	DATE	DESCRIPTION
A8	09-24-2015	ADDENDUM # 8
A6	09-03-2015	ADDENDUM # 6
A5	08-12-2015	ADDENDUM # 5
	6-15-2015	BID DOCUMENT

PROJECT NUMBER: 44578
DESIGNED BY: MAK / WW
DRAWN BY: LR / LM / WW / JS / JM / DF / YB / YK
FIELD CHECK: N/A
APPROVED: WS / MAK / LF

SHEET TITLE: FINISH SCHEDULE
BUILDING NUMBER: 102
DRAWING NUMBER: AF-115
SHEET

9/24/2015 4:42:47 PM

LEGEND:

- 2'X2' RECESSED NOM. FLOURESCENT LAMP
- 2'X2' RECESSED FLOURESCENT LAMP
- 4' SURFACE/ PENDANT MOUNTED FLOURESCENT LAMP
- 4' WALL MOUNTED FLOURESCENT LAMP FOR WET AREAS
- 1'X4' RECESSED NOM. FLOURESCENT LAMP
- 1'X4' RECESSED NOM. FLOURESCENT LAMP
- 2'X4' RECESSED NOM. FLOURESCENT LAMP
- 2'X4' RECESSED FLOURESCENT LAMP
- 2'X4' RECESSED NOM. FLOURESCENT LAMP
- 2'X2' RECESSED NOM. FLOURESCENT LAMP
- SURFACE MOUNTED LED LAMP
- 9" DIA. RECESSED NOM. LED DOWNLIGHT LAMP
- 4" DIA. RECESSED NOM. LED DOWNLIGHT LAMP
- 4'X1' PENDENT MOUNTED NOM. FLOURESCENT LAMP
- 4'X2.5' RECESSED NOM. LED LAMP
- 4'-5' WALL SURFACE MOUNTED LED LAMP
- 4.625"X 4' CORNER SURFACE MOUNTED FLOURESCENT LAMP
- 6"X4' RECESSED NOM. FLOURESCENT LAMP
- 6"X8" LED LENSED STEPLIGHT
- 4"X2.75" LED LENSED STEPLIGHT
- 2' WALL SURFACE MOUNTED FLOURESCENT LAMP
- JUNCTION BOX
- ILLUMINATED EXIT SIGN SINGLE FACE
- ILLUMINATED EXIT LIGHT DOUBLE FACE WITH DIRECTIONAL ARROWS AS INDICATED
- RETURN AIR
- SUPPLY AIR
- EXHAUST AIR
- 2' X 2' ACCESS DOOR (J/INDUSTRIES-FR ACCESS DOORS FDWB)
- PENDENT QUICK RESPONSE SPRINKLER (ALL AREAS WITH HUNG CEILING)
- UPRIGHT QUICK RESPONSE SPRINKLER (ALL AREAS WITHOUT HUNG CEILING)
- SIDE WALL QUICK RESPONSE SPRINKLER
- CAMERA
- REC — PAS RECEIVER
- SM — INTERFACE MODULE
- WWA — WAVE WARE ANNUNCIATOR
- MOTION DETECTOR
- DOOR LOCKING HARDWARE
- MUTI-TAP PAGING SPEAKER
- INTERCOM STATION
- NDU — NETWORK DISPLAY UNIT
- FACP — FIRE ALARM CONTROL PANEL
- ADR — AUXILIARY POWER SUPPLY
- F — MANUAL PULL STATION (INSTITUTIONAL)
- SMOKE DETECTOR
- DUCT SMOKE DETECTOR
- 135°F FIXED TEMPERATURE/ FOR HEAT DETECTOR
- IAM RELAY
- MAGNETIC DOOR HOLDER
- FLOW SWITCH
- WALL MOUNTED SPEAKER/ VISUAL APPLIANCE WITH CANDELA RATING
- WALL MOUNTED SPEAKER APPLIANCE
- CEILING MOUNTED SPEAKER/ VISUAL APPLIANCE WITH CANDELA RATING
- CEILING MOUNTED SPEAKER APPLIANCE
- POKE-THRU COMMUNICATIONS OUTLET
- AP — WLAN ACCESS POINT (AP) CEILING OUTLET
- TV — CATV OUTLET
- SB — SMARTBOARD OUTLET
- INDICATES EXISTING SPACES TO REMAIN

NOTE : FOR CEILING MATERIAL, SEE AF-115 FOR DETAILS.

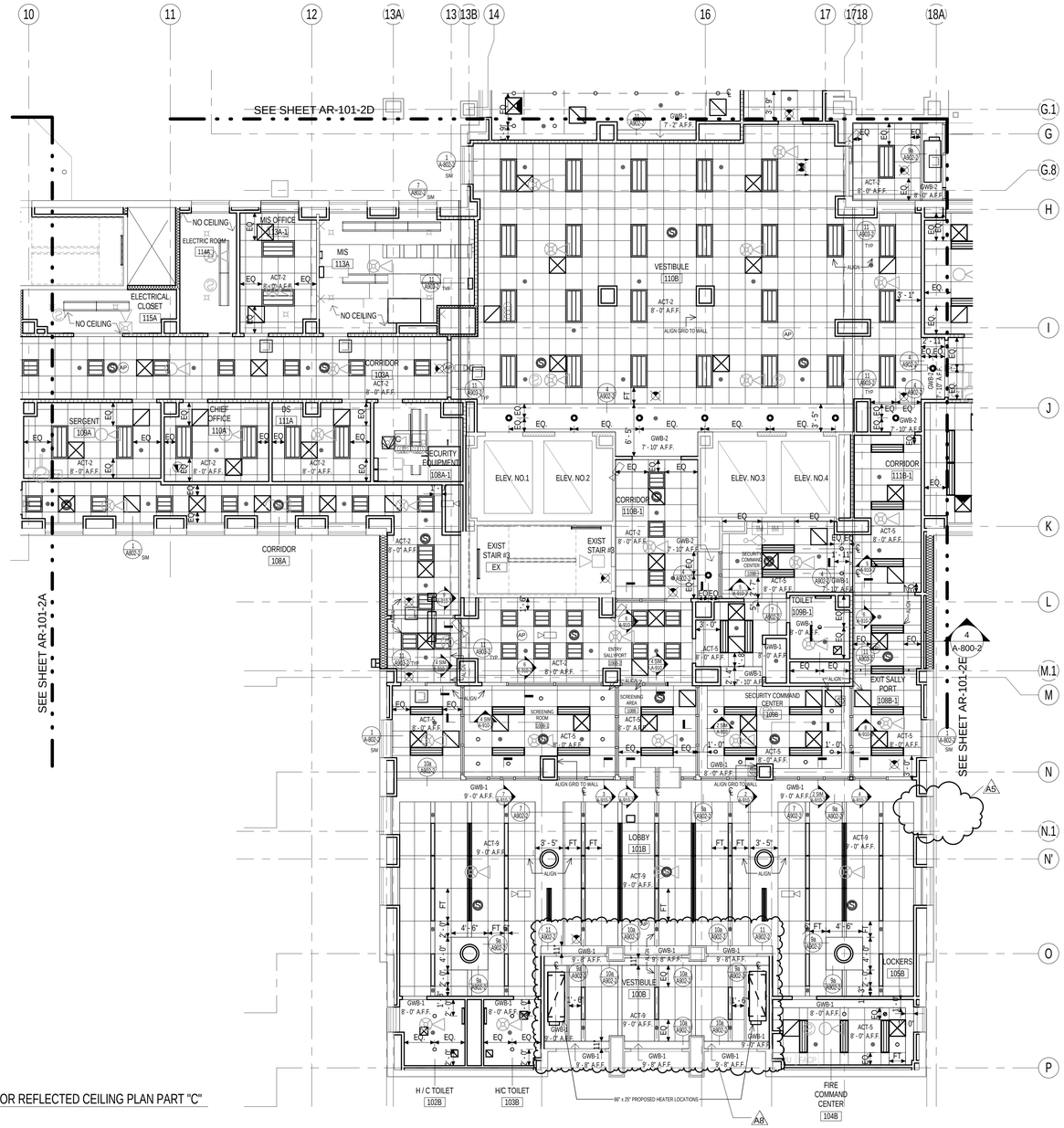

1 FIRST FLOOR REFLECTED CEILING PLAN PART "C"

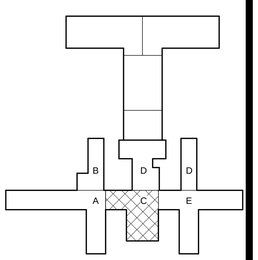

PROJECT NORTH

0 4' 8' 16'
SCALE: 1/8" = 1'-0"

REVISED DRAWING 09/24/2015

9/23/2015 12:22:43 PM

NEW YORK STATE OF OPPORTUNITY. | Office of General Services

DESIGN & CONSTRUCTION

CONSULTANTS:

RBSD ARCHITECTS P.C. | STV 100 Years

A Joint Venture
225 Park Avenue South
New York, New York 10003

WARNING:
THE ALTERATION OF THIS MATERIAL IN ANY WAY, UNLESS DONE UNDER THE DIRECTION OF A COMPARABLE PROFESSIONAL, I.E. ARCHITECT FOR AN ARCHITECT, ENGINEER FOR AN ENGINEER OR LANDSCAPE ARCHITECT FOR A LANDSCAPE ARCHITECT, IS A VIOLATION OF THE NEW YORK STATE EDUCATION LAW AND/OR REGULATIONS AND IS A CLASS 'A' MISDEMEANOR.

REGISTERED ARCHITECT WILLIAM G. SEIFERT N.Y.S. LIC. NO. 16-0-10-7 NE

CONTRACT: CONSTRUCTION

TITLE: MAJOR BUILDING RENOVATIONS FOR THE MANHATTAN FORENSIC RELOCATION

LOCATION: MANHATTAN PSYCHIATRIC CENTER, BUILDING No. 102
600 EAST 125TH STREET WARDS ISLAND, NY10035

CLIENT: NYS OFFICE OF MENTAL HEALTH

MARK	DATE	DESCRIPTION
A8	09-24-2015	ADDENDUM # 8
A6	09-03-2015	ADDENDUM # 6
A5	08-12-2015	ADDENDUM # 5
	6-15-2015	BID DOCUMENT

PROJECT NUMBER:	44578
DESIGNED BY:	MAK / WW
DRAWN BY:	LR / LM / WW / JS / JM / DF / YB / YK
FIELD CHECK:	N/A
APPROVED:	WS / MAK / LF

SHEET TITLE: FIRST FLOOR REFLECTED CEILING PLAN, PART "C"

BUILDING NUMBER: 102

DRAWING NUMBER: AR-101-2C

SHEET

NYS Office of General Services
Serving New York

Design and Construction
AN ISO 9001:2008 CERTIFIED ORGANIZATION
Division of Construction, 34th Floor, Corning Tower
The Governor Nelson A. Rockefeller Empire State Plaza
Albany, New York 12242
Phone: (518) 474-0331 FAX: (518) 474-8201

INFORMATION BULLETIN

Project No.: 44579

Project Description: *(Project Title, Facility Name and Address)*	Client Agency:
44579 - Manhattan PC - Bid Package 1: Demolition, Asbestos RemovalStrengthen New York, NY	OMH

IB No.:	Trades:	Spec. Section:	Drawing No.:
IB 12	Contractor IB (Final)	Contractor IB (Final)	Strustural Drawings S-100-

Brief Description:
Several areas of the new floor slab construction require ¾" deep slab depressions to receive the new Schluter system in toilet room floors to be installed in the next bid package. The attached structural plans show approximate locations of the depressed

Issue Date:	Issued By:	Affiliation:
6/23/2015	Larry Fink	RBSD Architects

Reason:
☐ Program Changer ☒ Omission ☐ Design Error ☐ Contractor Error ☐ Field Error ☐ Field Condition ☐ Document Clarification
☐ Material / Methods Substitution

Detailed Scope Description (include contract adds and deducts):
See Detailed Descriptiom PDF below

Justification for OSC:
This work was originally intended to be done in BP-2 but in these specific areas it is more cost effective to hav the depressions accomplished as part of the BP-1 only in the areas where slabs are being strengthened or replaced

Estimated Cost Impact:	Estimated Time Impact:
☒ Additional Cost ☐ No Change ☐ Credit	☐ YES ☐ NO

Attached Document Description:
See Attached PDFBelow

<u>Bulletin No. 12 6/23/2015)</u>

Description of work:

Several areas of the new floor slab construction require ¾" deep slab depressions to receive the new Schluter system in toilet room floors to be installed in the next bid package. The attached structural plans show approximate locations of the depressed slab areas. The final locations of the slab depressions shall be coordinated with architectural drawings also attached to provide dimensions and locations of the depressions for both Bid Package 1 and Bid Package 2. The work covered in the scope of this IB 12 is limited to only the areas that are within the current BP-1 Contract.

There is no change to the placement of the Structural Steel supplementary beams already approved or the placement of metal deck. This bulletin only addresses the ¾ inch depression in the top of concrete in the areas identified.

Summary of changes:

Structural Drawings all dated 6-17-2015

<u>S-100-2</u>

- Two areas of ¾" deep slab depressions have been added between column lines H and I, and column lines 24 and 26.
- A typical slab depression detail has been added.

<u>S-101-2</u>

- One small "U" Shaped area of ¾" Depression has been added along column line K from 2'-91/2" to the North of line 7 to 2'-10 to the south of line 8.
- A typical slab depression detail

<u>S-102-2</u>

- Two areas of ¾" deep slab depressions have been added between column lines J and M, and column lines 6 and 10.
- A typical slab depression detail

<u>S-103-2</u>

- Two areas of ¾" deep slab depressions have been added between column lines H and K, and column lines 4 and 5.
- Two areas of ¾" deep slab depressions have been added between column lines J and M, and column lines 8 and 11.
- A typical slab depression detail has been added.

<u>S-104-2</u>

- Two areas of ¾" deep slab depressions have been added between column lines H and K, and column lines 4 and 5.
- Two areas of ¾" deep slab depressions have been added between column lines J and M, and column lines 8 and 11.

- A typical slab depression detail has been added.

S-105-2

- Two areas of ¾" deep slab depressions have been added between column lines H and K, and column lines 4 and 5.
- Two areas of ¾" deep slab depressions have been added between column lines J and M, and column lines 8 and 11.
- A typical slab depression detail has been added.

S-106-2

- Two areas of ¾" deep slab depressions have been added between column lines H and K, and column lines 4 and 5.
- Two areas of ¾" deep slab depressions have been added between column lines J and M, and column lines 8 and 11.
- A typical slab depression detail has been added.

S-107-2

- One area of ¾" deep slab depression has been added near column lines H and 6.
- A typical slab depression detail has been added.

S-108-2

- One area of ¾" deep slab depression has been added near column lines H and 6 at the 13th and 14th floor levels.
- A typical slab depression detail has been added

Architectural Drawings issued for reference: All Dated 6-17-2015
The following drawings are issued in this bulletin to show the locations of depressed Areas for this Contract and the future BP-2 Project. These drawings identify the areas covered under this bulletin in Gray H shade. The areas that will be addressed in a future BP-2 Contract are indicated in a diagonal hatch.

G-002-2 List of Drawings with supplemental New AD dwgs added

AD-300-2 Basement Floor

AD-301-2 1st Floor

AD-302-2 2nd Floor

AD-303-2 3 – 5th Floors

AD-304-2 6– 11th Floors

AD-305-2 12– 14th Floor

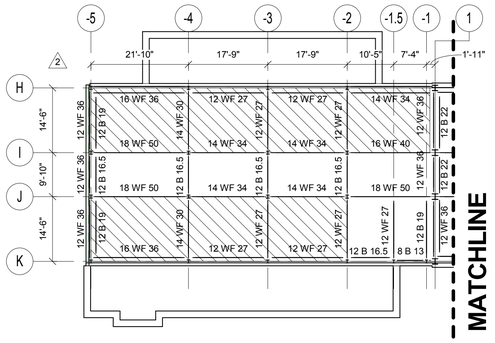

BASEMENT FLOOR LEGEND

- EXISTING FLOOR CONSTRUCTION TO REMAIN (SEE DEMOLITION PLANS FOR AREAS OF NEW NONSTRUCTURAL L.W. CONCRETE TOPPING AT PREVIOUSLY REMOVED CERAMIC AND QUARRY TILE)
- EXISTING 4" CONCRETE FILL REMOVED AS SHOWN ON DEMOLITION DWG. SD-100-2 TO BE REPLACED WITH 4" (U.O.N.) LIGHT WEIGHT CONCRETE COMPOSITE TOPPING (SEE DETAIL 5/S-301-2), EXISTING CINDER FILLER BLOCKS AND CONC. JOISTS BELOW TO REMAIN
- EXISTING FLOOR OPENING TO BE INFILLED WITH NEW FLOOR CONSTRUCTION (SEE DETAIL 1/S-301-2), U.O.N.
- 16 WF 36 — DENOTES EXISTING FLOOR BEAM TO REMAIN
- ★ W12x26 — ★ DENOTES NEW FLOOR BEAM SEE DETAIL 4/S-301-2
- (WT-X) — DENOTES NEW WELDED WT REINFORCING MEMBER, SEE DETAIL 1/S-303-2
- NEW FLOOR OPENING (U.O.N.)
- DENOTES NEW DEPRESSED SLAB AREA (REFER TO ARCHITECTURAL DRAWINGS, AS-100 SERIES, FOR EXACT LOCATIONS AND SIZE)

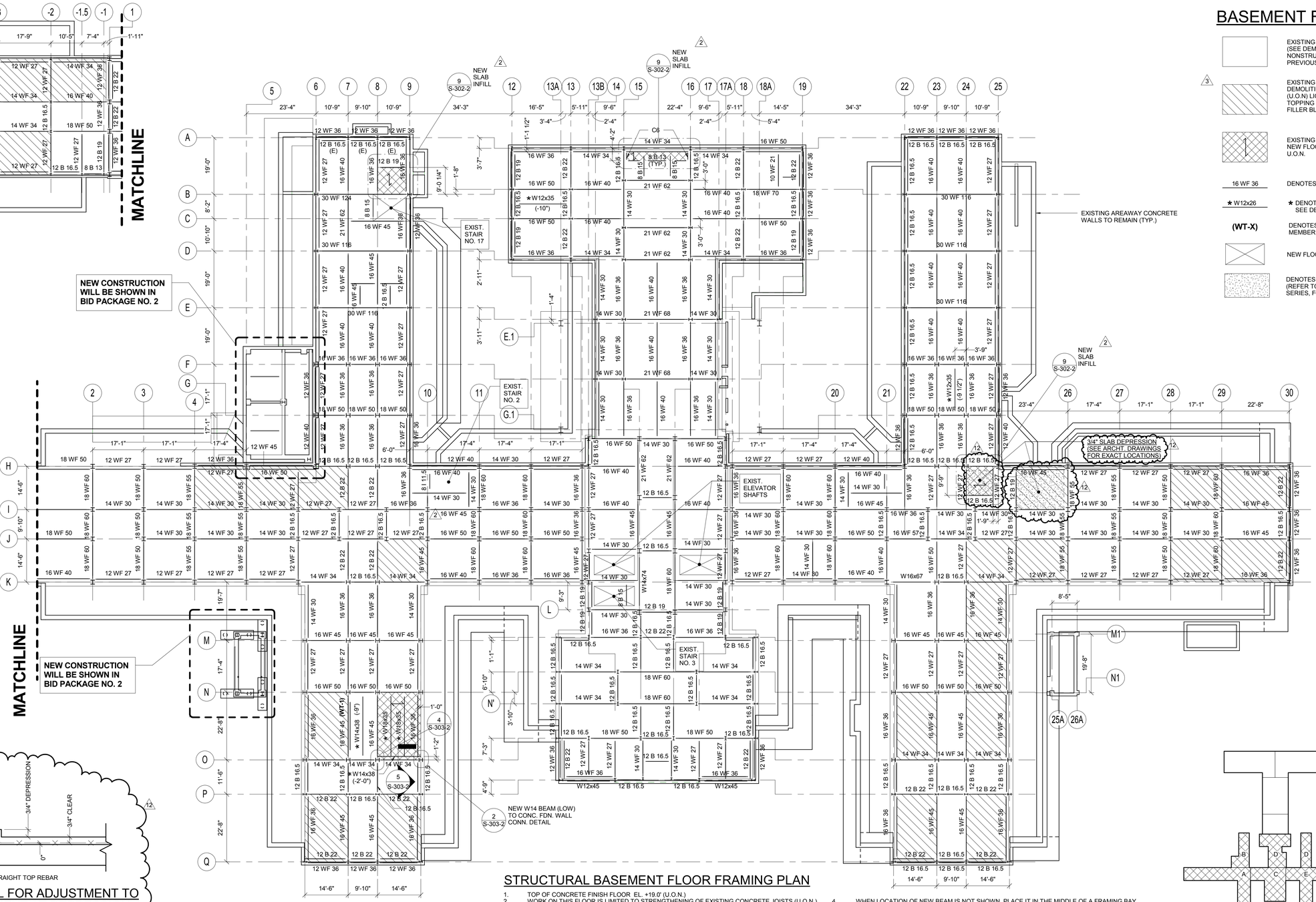

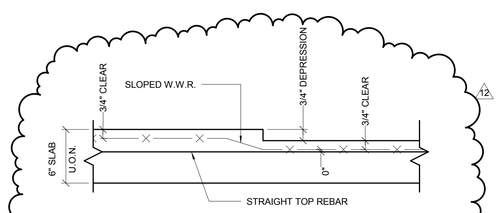

SLAB DEPRESSION DETAIL FOR ADJUSTMENT TO REINFORCEMENT PLACEMENT AT DEPRESSION TRANSITION

STRUCTURAL BASEMENT FLOOR FRAMING PLAN

1. TOP OF CONCRETE FINISH FLOOR EL. +19.0' (U.O.N.)
2. WORK ON THIS FLOOR IS LIMITED TO STRENGTHENING OF EXISTING CONCRETE JOISTS (U.O.N.). THE AREA OF WORK IS SHOWN ON THIS DRAWING AS A HATCHED AREA, SEE SHEET LEGEND. FOR EXISTING FLOOR CONSTRUCTION IN THE AREA OF STRENGTHENING, SEE CONDITION #1 ON DETAIL 1/SD-001, AND DETAIL 2/SD-001.
3. REFER TO DETAIL 6/S-302-2 FOR NEW COMPOSITE CONCRETE FLOOR TOPPING.
4. WHEN LOCATION OF NEW BEAM IS NOT SHOWN, PLACE IT IN THE MIDDLE OF A FRAMING BAY (BASED ON CENTERLINE OF COLUMNS), OR EQUAL SPACING.
5. TOP OF EXISTING STEEL ELEVATION 6" BELOW FINISH FLOOR ELEVATION, U.O.N.
6. SYMBOL (-11") INDICATES TOP OF NEW STEEL BEAM DISTANCE WITH REFERENCE TO FINISH FLOOR ELEVATION.
7. ALL EXISTING STEEL BEAMS ARE ENCASED IN CONCRETE. FOR NEW BEAM CONNECTION TO EXIST. BEAM, ENCASEMENT SHALL BE REMOVED LOCALLY AND PATCHED AFTER INSTALLATION.

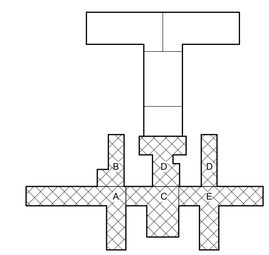

PROJECT NORTH

SCALE: 1/16" = 1'-0"

NYS OFFICE OF GENERAL SERVICES

Serving New York

ANDREW M. CUOMO
Governor
ROANN M. DESTITO
Commissioner

CONSULTANTS:

RBSD ARCHITECTS P.C. | STV 100 Years

A Joint Venture
225 Park Avenue South
New York, New York 10003

WARNING:
THE ALTERATION OF THIS MATERIAL IN ANY WAY, UNLESS DONE UNDER THE DIRECTION OF A COMPARABLE PROFESSIONAL, I.E. ARCHITECT FOR AN ARCHITECT, ENGINEER FOR AN ENGINEER OR LANDSCAPE ARCHITECT FOR A LANDSCAPE ARCHITECT, IS A VIOLATION OF THE NEW YORK STATE EDUCATION LAW AND/OR REGULATIONS AND IS A CLASS 'A' MISDEMEANOR.

CONTRACT: CONSTRUCTION

TITLE: PHASE 1 WORK: DEMOLITION, ASBESTOS REMOVAL, STRENGTHEN FLOOR SLABS & REPLACE WINDOWS

LOCATION: MANHATTAN PSYCHIATRIC CENTER, BUILDING No. 102
600 EAST 125TH STREET WARDS ISLAND, NY 10035

CLIENT: NYS OFFICE OF MENTAL HEALTH

PROGRESS PRINT

MARK	DATE	DESCRIPTION
12	6-17-2015	BULLETIN NO. 12
3	7-17-2014	ADDENDUM NO. 3
2	6-30-2014	ADDENDUM NO. 2

PROJECT NUMBER:	44579
DESIGNED BY:	MR
DRAWN BY:	CJL
FIELD CHECK:	ACC/JM
APPROVED:	ACC

SHEET TITLE: STRUCTURAL BASEMENT FLOOR FRAMING PLAN

BUILDING NUMBER: 102

DRAWING NUMBER: S-100-2

SHEET

6/12/2015 4:57:18 PM

TYPICAL FLOOR LEGEND

DENOTES NEW DEPRESSED SLAB AREA (REFER TO ARCHITECTURAL DRAWINGS, AS-100 SERIES, FOR EXACT LOCATIONS AND SIZE)

DENOTES FUTURE FLOOR OPENING AT BOTTOM OF MECH. SHAFT, OPENING TO BE SAW CUT FOR **BID PACKAGE NO. 2** IN NEW FLOOR CONSTRUCTION (REFER TO TYPICAL DETAIL 6/S-301-2)

EXISTING FLOOR CONSTRUCTION TO REMAIN (SEE DEMOLITION PLANS FOR AREAS OF NEW NONSTRUCTURAL L.W. CONCRETE TOPPING AT PREVIOUSLY REMOVED CERAMIC AND QUARRY TILE)

EXISTING FLOOR SLAB TO BE REPLACED WITH NEW FLOOR CONSTRUCTION (SEE DETAIL 1/S-301-2), U.O.N.

AREA OF REMOVED CONCRETE FLOOR FILL TO BE INFILLED WITH NEW REINFORCED L.W. CONCRETE (SEE DETAIL 3/S-301-2)

16 WF 36 — DENOTES EXISTING FLOOR BEAM TO REMAIN

** 16 WF 36 [...] — DENOTES EXISTING FLOOR BEAM TO REMAIN AND BE REINFORCED WITH WELDED SHEAR STUDS (REFER TO TYPICAL FLOOR RECONSTRUCTION DETAILS)

* W12x26 — * DENOTES NEW FLOOR BEAM UNDER SOLID CONC. SLAB OR CONC. JOISTS, SEE DETAILS 1 & 4/S-301-2, TOP OF STEEL ELEVATIONS IS 6" BELOW FINISH FLOOR ELEVATION, U.O.N.

DENOTES SPAN DIRECTION OF METAL DECK FOR NEW CONCRETE SLAB, SEE DETAIL 1/S-301-2

(WT-X) — DENOTES NEW WELDED WT REINFORCING MEMBER, SEE DETAIL 1/S-303-2

(CP-X) — DENOTES NEW WELDED REINFORCING COVER PLATE, SEE DETAIL 1/S-303-2

DENOTES OUTLINE OF FUTURE TYPICAL FLOOR OPENING TO BE SAW CUT FOR **BID PACKAGE NO. 2** IN NEW FLOOR CONSTRUCTION (REFER TO TYPICAL DETAIL 6/S-301-2)

NOTE: SEE DETAIL 1/S-301-2 FOR SUGGESTED SEQUENCE FOR NEW FLOOR CONSTRUCTION.

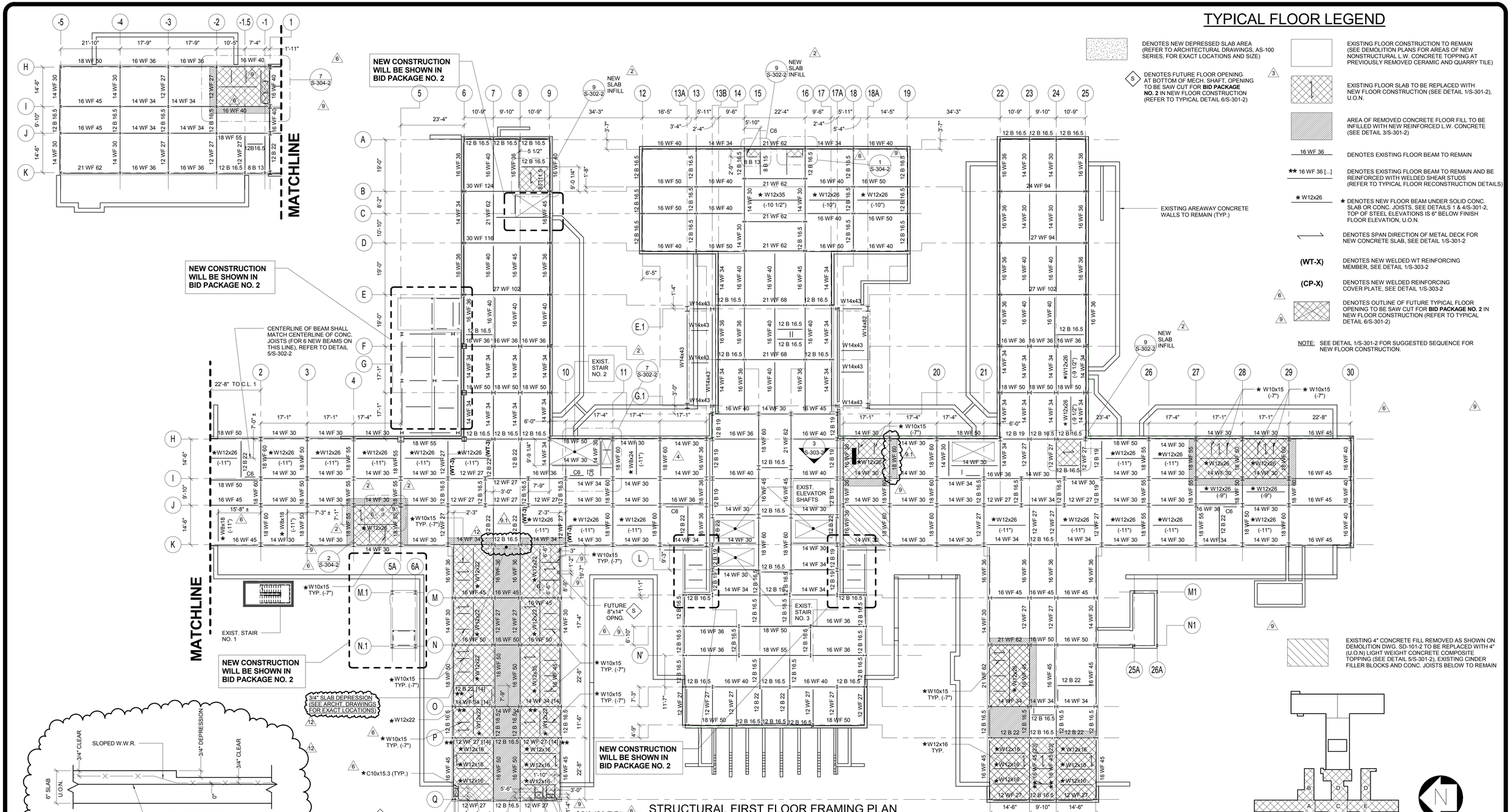

STRUCTURAL FIRST FLOOR FRAMING PLAN

NOTES:

1. TOP OF CONCRETE FINISH FLOOR EL. +31.25' (U.O.N.).
2. NEW CONCRETE SLAB CONSTRUCTION IS 4" LIGHTWEIGHT CONCRETE REINFORCED WITH WWF 6x6 W2.0xW2.0 OVER 2" COMPOSITE METAL DECK LOCK FLOOR 20GA BY USD.
3. WORK ON THIS FLOOR IS LIMITED TO STRENGHTENING OF EXISTING CONCRETE FLOOR (U.O.N.). THE AREA OF WORK IS SHOWN ON THIS DRAWING AS A HATCHED AREA, SEE SHEET LEGEND. FOR THE FLOOR CONSTRUCTION IN THE AREA OF STRENGTHENING, SEE DETAILS 1, 2, 3, 7/S-301-2.
4. WHEN LOCATION OF NEW BEAM IS NOT SHOWN, PLACE IT IN THE MIDDLE OF A FRAMING BAY (BASED ON CENTERLINE OF COLUMNS), OR EQUAL SPACING.
5. TOP OF EXISTING STEEL ELEVATION 6" BELOW FINISH FLOOR ELEVATION, U.O.N.
6. SYMBOL (-11") INDICATES TOP OF NEW STEEL BEAM DISTANCE WITH REFERENCE TO FINISH FLOOR ELEVATION.
7. ALL EXISTING STEEL BEAMS ARE ENCASED IN CONCRETE. FOR NEW BEAM CONNECTION TO EXIST. BEAM, ENCASEMENT SHALL BE REMOVED LOCALLY AND PATCHED AFTER INSTALLATION.

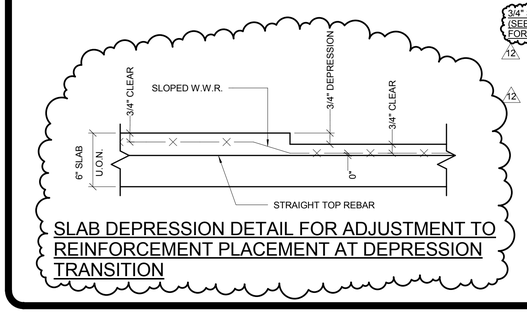

SLAB DEPRESSION DETAIL FOR ADJUSTMENT TO REINFORCEMENT PLACEMENT AT DEPRESSION TRANSITION

NYS OFFICE OF GENERAL SERVICES
Serving New York
ANDREW M. CUOMO
Governor
ROANN M. DESTITO
Commissioner

CONSULTANTS:
RBSD ARCHITECTS P.C. | STV 100 Years
A Joint Venture
225 Park Avenue South
New York, New York 10003

6/23/2015 9:54:32 AM

WARNING:
THE ALTERATION OF THIS MATERIAL IN ANY WAY, UNLESS DONE UNDER THE DIRECTION OF A COMPARABLE PROFESSIONAL, I.E. ARCHITECT FOR AN ARCHITECT, ENGINEER FOR AN ENGINEER OR LANDSCAPE ARCHITECT FOR A LANDSCAPE ARCHITECT, IS A VIOLATION OF THE NEW YORK STATE EDUCATION LAW AND/OR REGULATIONS AND IS A CLASS 'A' MISDEMEANOR.

CONTRACT: CONSTRUCTION

TITLE: PHASE 1 WORK: DEMOLITION, ASBESTOS REMOVAL, STRENGTHEN FLOOR SLABS & REPLACE WINDOWS

LOCATION: MANHATTAN PSYCHIATRIC CENTER, BUILDING No. 102, 600 EAST 125TH STREET WARDS ISLAND, NY 10035

CLIENT: NYS OFFICE OF MENTAL HEALTH

PROGRESS PRINT

MARK	DATE	DESCRIPTION
12	6-17-2015	BULLETIN NO. 12
9.1	4-29-2015	BULLETIN NO. 9.1
9	4-8-2015	BULLETIN NO. 9
6	3-9-2015	BULLETIN NO. 6
4	2-13-2015	BULLETIN NO. 4
3	7-17-2014	ADDENDUM NO. 3
2	6-30-2014	ADDENDUM NO. 2

PROJECT NUMBER:	44579
DESIGNED BY:	MR
DRAWN BY:	CJL
FIELD CHECK:	ACC/JM
APPROVED:	ACC

SHEET TITLE: STRUCTURAL FIRST FLOOR FRAMING PLAN

BUILDING NUMBER: 102

DRAWING NUMBER: S-101-2

SHEET

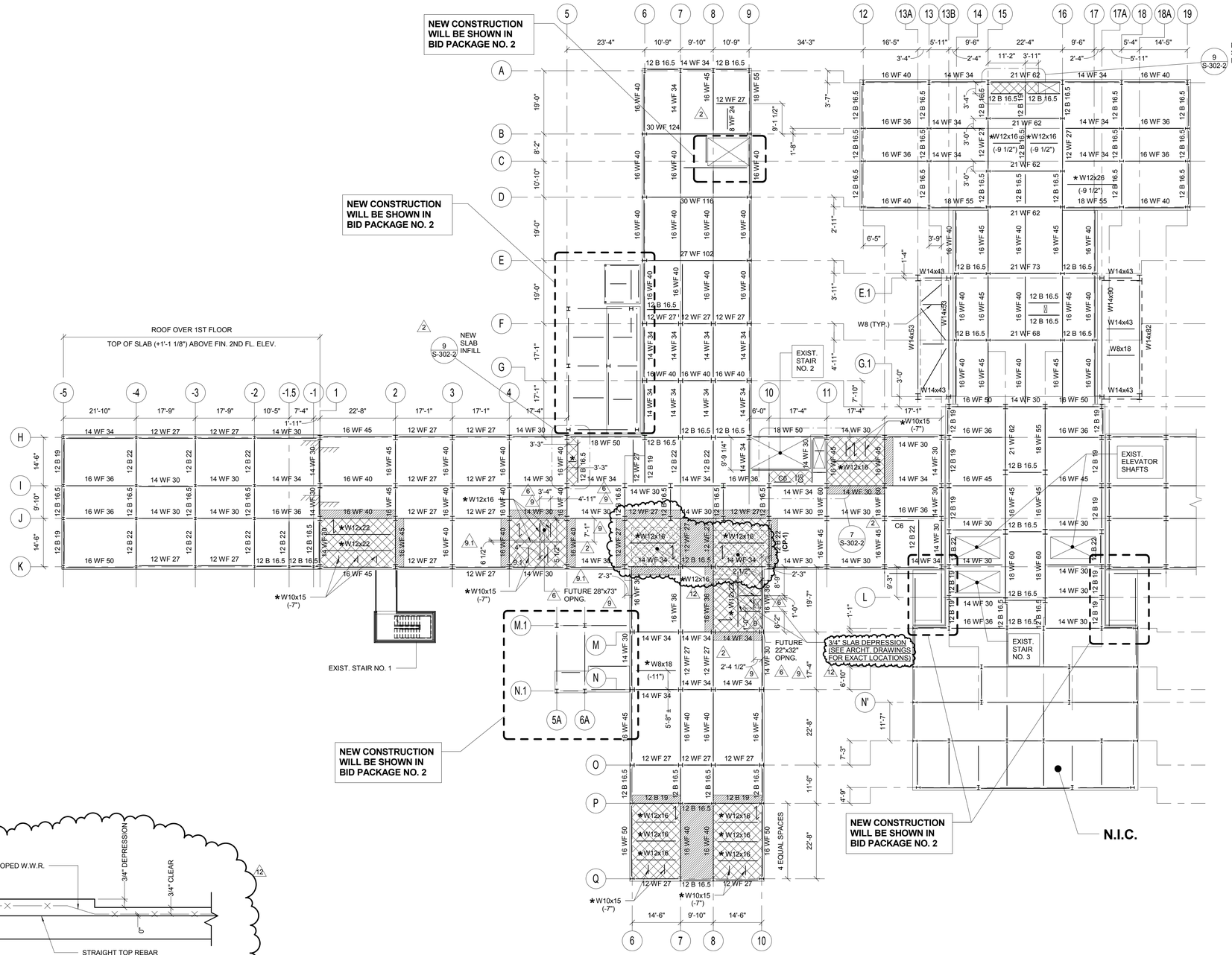

STRUCTURAL SECOND FLOOR FRAMING PLAN

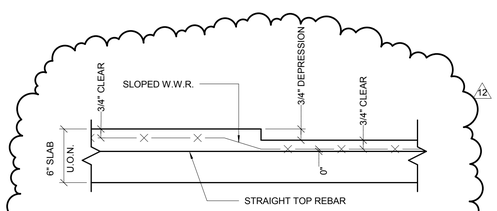

SLAB DEPRESSION DETAIL FOR ADJUSTMENT TO REINFORCEMENT PLACEMENT AT DEPRESSION TRANSITION

NOTES:

1. TOP OF CONCRETE FINISH FLOOR EL. +43.50' (U.O.N.)
2. NEW CONCRETE SLAB CONSTRUCTION IS 4" LIGHTWEIGHT CONCRETE REINFORCED WITH WWF6x6 W2.0xW2.0 OVER 2" COMPOSITE METAL DECK LOCK FLOOR 20GA BY USD.
3. WORK ON THIS FLOOR IS LIMITED TO STRENGHTENING OF EXISTING CONCRETE FLOOR (U.O.N.). THE AREA OF WORK IS SHOWN ON THIS DRAWING AS A HATCHED AREA, SEE SHEET LEGEND. FOR THE FLOOR CONSTRUCTION IN THE AREA OF STRENGTHENING, SEE DETAILS 1, 2, 3, 7/S-301-2.
4. WHEN LOCATION OF NEW BEAM IS NOT SHOWN, PLACE IT IN THE MIDDLE OF A FRAMING BAY (BASED ON CENTERLINE OF COLUMNS), OR EQUAL SPACING.
5. TOP OF EXISTING STEEL ELEVATION 6" BELOW FINISH FLOOR ELEVATION, U.O.N.
6. SYMBOL (-11") INDICATES TOP OF NEW STEEL BEAM DISTANCE WITH REFERENCE TO FINISH FLOOR ELEVATION.
7. ALL EXISTING STEEL BEAMS ARE ENCASED IN CONCRETE. FOR NEW BEAM CONNECTION TO EXIST. BEAM, ENCASEMENT SHALL BE REMOVED LOCALLY AND PATCHED AFTER INSTALLATION.

TYPICAL FLOOR LEGEND

- EXISTING FLOOR CONSTRUCTION TO REMAIN (SEE DEMOLITION PLANS FOR AREAS OF NEW NONSTRUCTURAL L.W. CONCRETE TOPPING AT PREVIOUSLY REMOVED CERAMIC AND QUARRY TILE)
- 3 — EXISTING FLOOR SLAB TO BE REPLACED WITH NEW FLOOR CONSTRUCTION (SEE DETAIL 1/S-301-2), U.O.N.
- AREA OF REMOVED CONCRETE FLOOR FILL TO BE INFILLED WITH NEW REINFORCED L.W. CONCRETE (SEE DETAIL 3/S-301-2)
- 16 WF 36 — DENOTES EXISTING FLOOR BEAM TO REMAIN
- ** 16 WF 36 [...] — DENOTES EXISTING FLOOR BEAM TO REMAIN AND BE REINFORCED WITH WELDED SHEAR STUDS (REFER TO TYPICAL FLOOR RECONSTRUCTION DETAILS)
- * W12x26 — * DENOTES NEW FLOOR BEAM UNDER SOLID CONC. SLAB OR CONC. JOISTS, SEE DETAILS 1 & 4/S-301-2, TOP OF STEEL ELEVATIONS IS 6" BELOW FINISH FLOOR ELEVATION, U.O.N.
- DENOTES SPAN DIRECTION OF METAL DECK FOR NEW CONCRETE SLAB, SEE DETAIL 1/S-301-2
- (WT-X) — DENOTES NEW WELDED WT REINFORCING MEMBER, SEE DETAIL 1/S-303-2
- (CP-X) — DENOTES NEW WELDED REINFORCING COVER PLATE, SEE DETAIL 1/S-303-2
- 6, 9 — DENOTES OUTLINE OF FUTURE TYPICAL FLOOR OPENING TO BE SAW CUT FOR **BID PACKAGE NO. 2** IN NEW FLOOR CONSTRUCTION (REFER TO TYPICAL DETAIL 6/S-301-2)

NOTE: SEE DETAIL 1/S-301-2 FOR SUGGESTED SEQUENCE FOR NEW FLOOR CONSTRUCTION.

- 6, 9, S — DENOTES FUTURE FLOOR OPENING AT BOTTOM OF MECH. SHAFT, OPENING TO BE SAW CUT FOR **BID PACKAGE NO. 2** IN NEW FLOOR CONSTRUCTION (REFER TO TYPICAL DETAIL 6/S-301-2)
- DENOTES NEW DEPRESSED SLAB AREA (REFER TO ARCHITECTURAL DRAWINGS, AS-100 SERIES, FOR EXACT LOCATIONS AND SIZE)

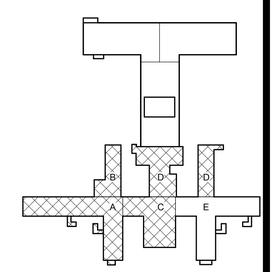

PROJECT NORTH

SCALE: 1/16" = 1'-0"

NYS OFFICE OF GENERAL SERVICES
Serving New York
ANDREW M. CUOMO, Governor
ROANN M. DESTITO, Commissioner

CONSULTANTS:
RBSD ARCHITECTS P.C. | STV 100 Years
A Joint Venture
225 Park Avenue South
New York, New York 10003

WARNING:
THE ALTERATION OF THIS MATERIAL IN ANY WAY, UNLESS DONE UNDER THE DIRECTION OF A COMPARABLE PROFESSIONAL, I.E. ARCHITECT FOR AN ARCHITECT, ENGINEER FOR AN ENGINEER OR LANDSCAPE ARCHITECT FOR A LANDSCAPE ARCHITECT, IS A VIOLATION OF THE NEW YORK STATE EDUCATION LAW AND/OR REGULATIONS AND IS A CLASS 'A' MISDEMEANOR.

CONTRACT: CONSTRUCTION
TITLE: PHASE 1 WORK: DEMOLITION, ASBESTOS REMOVAL, STRENGTHEN FLOOR SLABS & REPLACE WINDOWS
LOCATION: MANHATTAN PSYCHIATRIC CENTER, BUILDING No. 102, 600 EAST 125TH STREET WARDS ISLAND, NY 10035
CLIENT: NYS OFFICE OF MENTAL HEALTH

PROGRESS PRINT

MARK	DATE	DESCRIPTION
12	6-17-2015	BULLETIN NO. 12
9.1	4-29-2015	BULLETIN NO. 9.1
9	4-8-2015	BULLETIN NO. 9
6	3-9-2015	BULLETIN NO. 6
3	7-17-2014	ADDENDUM NO. 3
2	6-30-2014	ADDENDUM NO. 2

PROJECT NUMBER:	44579
DESIGNED BY:	MR
DRAWN BY:	CJL
FIELD CHECK:	ACC/JM
APPROVED:	ACC

SHEET TITLE: STRUCTURAL SECOND FLOOR FRAMING PLAN

BUILDING NUMBER: 102
DRAWING NUMBER: S-102-2
SHEET

6/12/2015 4:57:22 PM

TYPICAL FLOOR LEGEND

	EXISTING FLOOR CONSTRUCTION TO REMAIN (SEE DEMOLITION PLANS FOR AREAS OF NEW NONSTRUCTURAL L.W. CONCRETE TOPPING AT PREVIOUSLY REMOVED CERAMIC AND QUARRY TILE)
3	EXISTING FLOOR SLAB TO BE REPLACED WITH NEW FLOOR CONSTRUCTION (SEE DETAIL 1/S-301-2), U.O.N.
	AREA OF REMOVED CONCRETE FLOOR FILL TO BE INFILLED WITH NEW REINFORCED L.W. CONCRETE (SEE DETAIL 3/S-301-2)
16 WF 36	DENOTES EXISTING FLOOR BEAM TO REMAIN
** 16 WF 36 [...]	DENOTES EXISTING FLOOR BEAM TO REMAIN AND BE REINFORCED WITH WELDED SHEAR STUDS (REFER TO TYPICAL FLOOR RECONSTRUCTION DETAILS)
* W12x26	* DENOTES NEW FLOOR BEAM UNDER SOLID CONC. SLAB OR CONC. JOISTS, SEE DETAILS 1 & 4/S-301-2, TOP OF STEEL ELEVATIONS IS 6" BELOW FINISH FLOOR ELEVATION, U.O.N.
	DENOTES SPAN DIRECTION OF METAL DECK FOR NEW CONCRETE SLAB, SEE DETAIL 1/S-301-2
(WT-X)	DENOTES NEW WELDED WT REINFORCING MEMBER, SEE DETAIL 1/S-303-2
(CP-X)	DENOTES NEW WELDED REINFORCING COVER PLATE, SEE DETAIL 1/S-303-2
6 / 9	DENOTES OUTLINE OF FUTURE TYPICAL FLOOR OPENING TO BE SAW CUT FOR **BID PACKAGE NO. 2** IN NEW FLOOR CONSTRUCTION (REFER TO TYPICAL DETAIL 6/S-301-2)
NOTE:	SEE DETAIL 1/S-301-2 FOR SUGGESTED SEQUENCE FOR NEW FLOOR CONSTRUCTION.
6 / S / 9	DENOTES FUTURE FLOOR OPENING AT BOTTOM OF MECH. SHAFT, OPENING TO BE SAW CUT FOR **BID PACKAGE NO. 2** IN NEW FLOOR CONSTRUCTION (REFER TO TYPICAL DETAIL 6/S-301-2)
	DENOTES NEW DEPRESSED SLAB AREA (REFER TO ARCHITECTURAL DRAWINGS, AS-100 SERIES, FOR EXACT LOCATIONS AND SIZE)

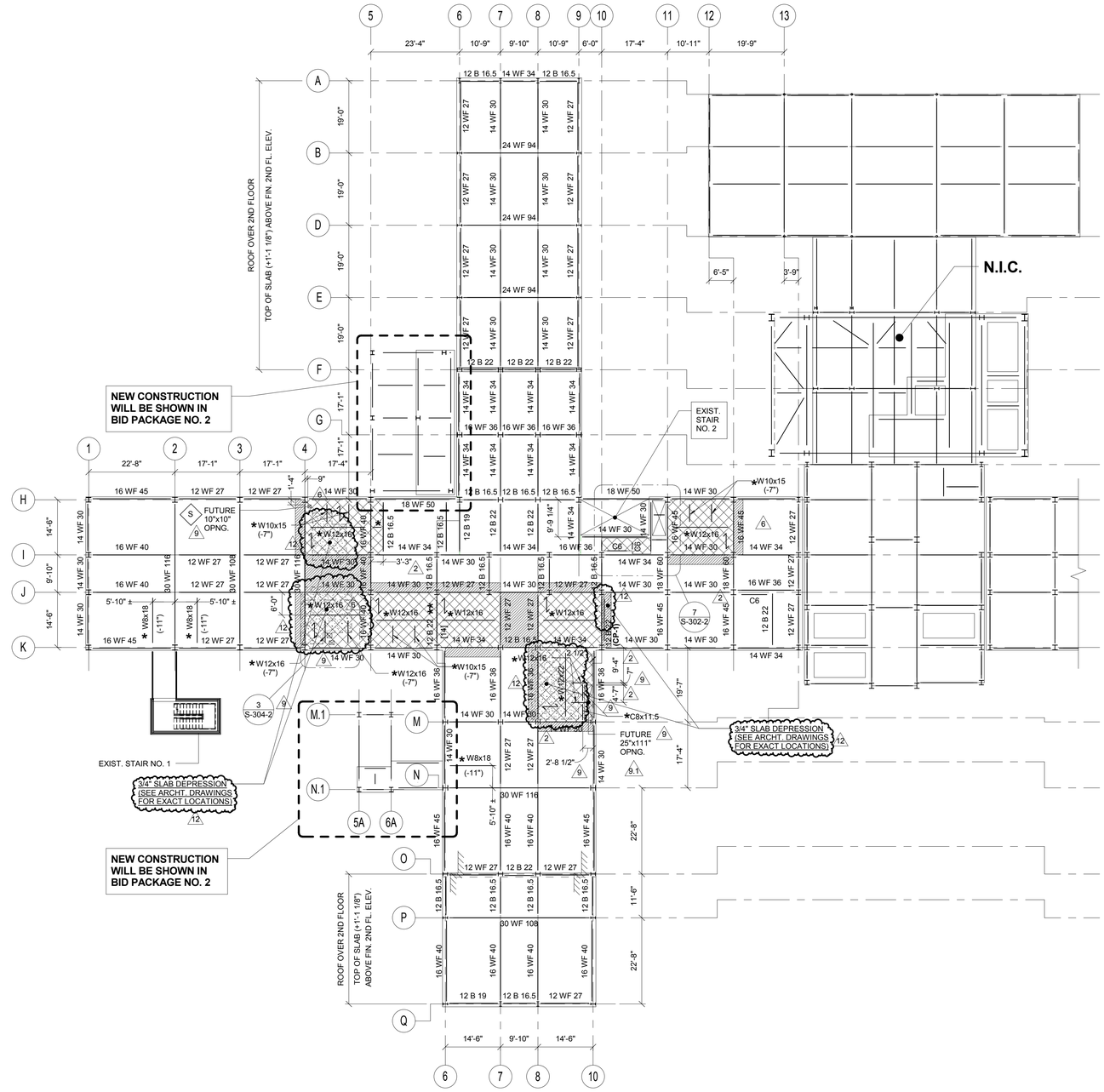

STRUCTURAL THIRD FLOOR FRAMING PLAN

NOTE:
1. TOP OF CONCRETE FINISH FLOOR EL. +55.75' (U.O.N.)
2. NEW CONCRETE SLAB CONSTRUCTION IS 4" LIGHTWEIGHT CONCRETE REINFORCED WITH WWF6x6 W2.0xW2.0 OVER 2" COMPOSITE METAL DECK LOCK FLOOR 20GA BY USD.
3. WORK ON THIS FLOOR IS LIMITED TO STRENGTHENING OF EXISTING CONCRETE FLOOR (U.O.N.). THE AREA OF WORK IS SHOWN ON THIS DRAWING AS A HATCHED AREA, SEE SHEET LEGEND. FOR THE FLOOR CONSTRUCTION IN THE AREA OF STRENGTHENING, SEE DETAILS 1, 2, 3, 7/S-301-2.
4. WHEN LOCATION OF NEW BEAM IS NOT SHOWN, PLACE IT IN THE MIDDLE OF A FRAMING BAY (BASED ON CENTERLINE OF COLUMNS), OR EQUAL SPACING.
5. TOP OF EXISTING STEEL ELEVATION 6" BELOW FINISH FLOOR ELEVATION, U.O.N.
6. SYMBOL (-11") INDICATES TOP OF NEW STEEL BEAM DISTANCE WITH REFERENCE TO FINISH FLOOR ELEVATION.
7. ALL EXISTING STEEL BEAMS ARE ENCASED IN CONCRETE. FOR NEW BEAM CONNECTION TO EXIST. BEAM, ENCASEMENT SHALL BE REMOVED LOCALLY AND PATCHED AFTER INSTALLATION.

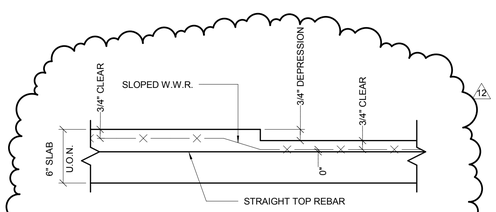

SLAB DEPRESSION DETAIL FOR ADJUSTMENT TO REINFORCEMENT PLACEMENT AT DEPRESSION TRANSITION

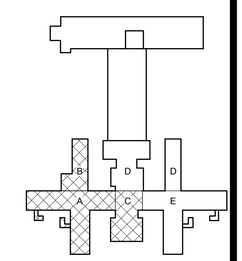

PROJECT NORTH

SCALE: 1/16" = 1'-0"

NYS OFFICE OF GENERAL SERVICES
Serving New York
ANDREW M. CUOMO, Governor
ROANN M. DESTITO, Commissioner

CONSULTANTS:
RBSD ARCHITECTS P.C. | STV 100 Years
A Joint Venture
225 Park Avenue South
New York, New York 10003

WARNING:
THE ALTERATION OF THIS MATERIAL IN ANY WAY, UNLESS DONE UNDER THE DIRECTION OF A COMPARABLE PROFESSIONAL, I.E. ARCHITECT FOR AN ARCHITECT, ENGINEER FOR AN ENGINEER OR LANDSCAPE ARCHITECT FOR A LANDSCAPE ARCHITECT, IS A VIOLATION OF THE NEW YORK STATE EDUCATION LAW AND/OR REGULATIONS AND IS A CLASS 'A' MISDEMEANOR.

CONTRACT: CONSTRUCTION
TITLE: PHASE 1 WORK: DEMOLITION, ASBESTOS REMOVAL, STRENGTHEN FLOOR SLABS & REPLACE WINDOWS
LOCATION: MANHATTAN PSYCHIATRIC CENTER, BUILDING No. 102, 600 EAST 125TH STREET WARDS ISLAND, NY 10035
CLIENT: NYS OFFICE OF MENTAL HEALTH

PROGRESS PRINT

MARK	DATE	DESCRIPTION
12	6-17-2015	BULLETIN NO. 12
9.1	4-29-2015	BULLETIN NO. 9.1
9	4-8-2015	BULLETIN NO. 9
6	3-9-2015	BULLETIN NO. 6
3	7-17-2014	ADDENDUM NO. 3
2	6-30-2014	ADDENDUM NO. 2

PROJECT NUMBER:	44579
DESIGNED BY:	MR
DRAWN BY:	CJL
FIELD CHECK:	ACC/JM
APPROVED:	ACC

SHEET TITLE: STRUCTURAL THIRD FLOOR FRAMING PLAN

BUILDING NUMBER: 102
DRAWING NUMBER: S-103-2
SHEET

6/12/2015 4:57:22 PM

TYPICAL FLOOR LEGEND

- EXISTING FLOOR CONSTRUCTION TO REMAIN (SEE DEMOLITION PLANS FOR AREAS OF NEW NONSTRUCTURAL L.W. CONCRETE TOPPING AT PREVIOUSLY REMOVED CERAMIC AND QUARRY TILE) (3)
- EXISTING FLOOR SLAB TO BE REPLACED WITH NEW FLOOR CONSTRUCTION (SEE DETAIL 1/S-301-2), U.O.N.
- AREA OF REMOVED CONCRETE FLOOR FILL TO BE INFILLED WITH NEW REINFORCED L.W. CONCRETE (SEE DETAIL 3/S-301-2)
- 16 WF 36 — DENOTES EXISTING FLOOR BEAM TO REMAIN
- ** 16 WF 36 [...] — DENOTES EXISTING FLOOR BEAM TO REMAIN AND BE REINFORCED WITH WELDED SHEAR STUDS (REFER TO TYPICAL FLOOR RECONSTRUCTION DETAILS)
- * W12x26 — * DENOTES NEW FLOOR BEAM UNDER SOLID CONC. SLAB OR CONC. JOISTS, SEE DETAILS 1 & 4/S-301-2, TOP OF STEEL ELEVATIONS IS 6" BELOW FINISH FLOOR ELEVATION, U.O.N.
- DENOTES SPAN DIRECTION OF METAL DECK FOR NEW CONCRETE SLAB, SEE DETAIL 1/S-301-2
- **(WT-X)** — DENOTES NEW WELDED WT REINFORCING MEMBER, SEE DETAIL 1/S-303-2
- **(CP-X)** — DENOTES NEW WELDED REINFORCING COVER PLATE, SEE DETAIL 1/S-303-2
- (6) (9) DENOTES OUTLINE OF FUTURE TYPICAL FLOOR OPENING TO BE SAW CUT FOR **BID PACKAGE NO. 2** IN NEW FLOOR CONSTRUCTION (REFER TO TYPICAL DETAIL 6/S-301-2)

NOTE: SEE DETAIL 1/S-301-2 FOR SUGGESTED SEQUENCE FOR NEW FLOOR CONSTRUCTION.

(6) (9) DENOTES FUTURE FLOOR OPENING AT BOTTOM OF MECH. SHAFT, OPENING TO BE SAW CUT FOR **BID PACKAGE NO. 2** IN NEW FLOOR CONSTRUCTION (REFER TO TYPICAL DETAIL 6/S-301-2)

- DENOTES NEW DEPRESSED SLAB AREA (REFER TO ARCHITECTURAL DRAWINGS, AS-100 SERIES, FOR EXACT LOCATIONS AND SIZE)

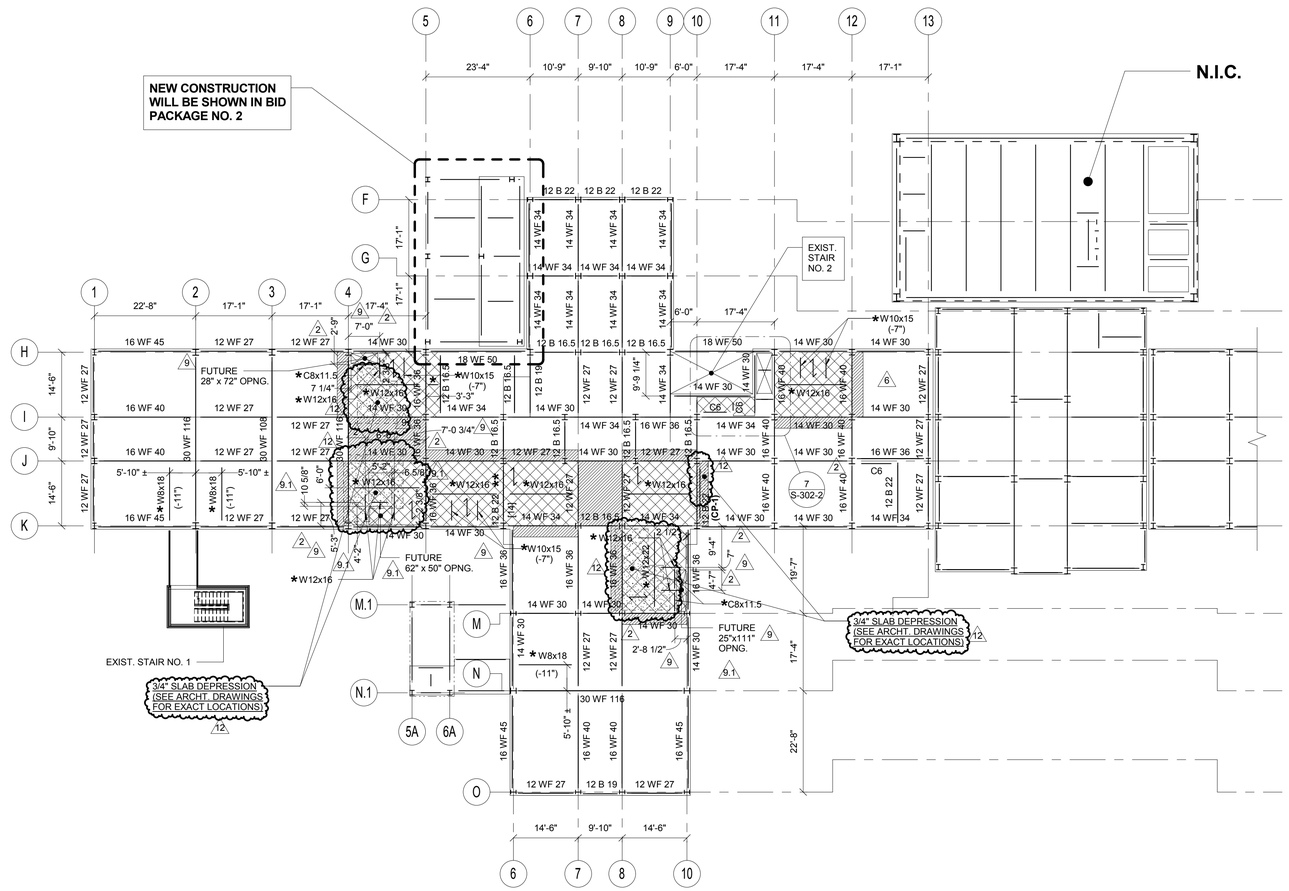

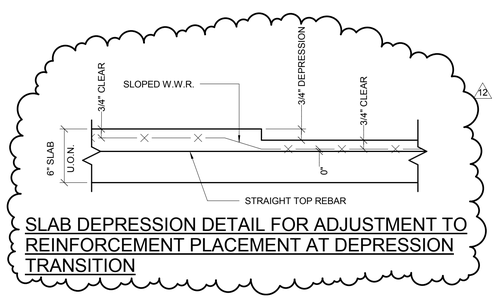

SLAB DEPRESSION DETAIL FOR ADJUSTMENT TO REINFORCEMENT PLACEMENT AT DEPRESSION TRANSITION

STRUCTURAL FOURTH AND FIFTH FLOOR FRAMING PLAN

NOTE:
1. 4TH FLOOR TOP OF CONCRETE FINISH FLOOR EL. +68.00' (U.O.N.)
   5TH FLOOR TOP OF CONCRETE FINISH FLOOR EL. +80.25' (U.O.N.)
2. NEW CONCRETE SLAB CONSTRUCTION IS 4" LIGHTWEIGHT CONCRETE REINFORCED WITH WWF 6x6 W2.0xW2.0 OVER 2" COMPOSITE METAL DECK LOCK FLOOR 20GA BY USD.
3. WORK ON THIS FLOOR IS LIMITED TO STRENGHTENING OF EXISTING CONCRETE FLOOR (U.O.N.). THE AREA OF WORK IS SHOWN ON THIS DRAWING AS A HATCHED AREA, SEE SHEET LEGEND. FOR THE FLOOR CONSTRUCTION IN THE AREA OF STRENGTHENING, SEE DETAILS 1, 2, 3, 7/S-301-2.
4. WHEN LOCATION OF NEW BEAM IS NOT SHOWN, PLACE IT IN THE MIDDLE OF A FRAMING BAY (BASED ON CENTERLINE OF COLUMNS), OR EQUAL SPACING.
5. TOP OF EXISTING STEEL ELEVATION 6" BELOW FINISH FLOOR ELEVATION, U.O.N.
6. SYMBOL (-11") INDICATES TOP OF NEW STEEL BEAM DISTANCE WITH REFERENCE TO FINISH FLOOR ELEVATION.
7. ALL EXISTING STEEL BEAMS ARE ENCASED IN CONCRETE. FOR NEW BEAM CONNECTION TO EXIST. BEAM, ENCASEMENT SHALL BE REMOVED LOCALLY AND PATCHED AFTER INSTALLATION.

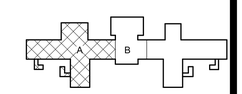

PROJECT NORTH

0 8' 16' 32'
SCALE: 1/16" = 1'-0"

NYS OFFICE OF GENERAL SERVICES
Serving New York
ANDREW M. CUOMO, Governor
ROANN M. DESTITO, Commissioner

CONSULTANTS:
RBSD ARCHITECTS P.C. | STV 100 Years
A Joint Venture
225 Park Avenue South
New York, New York 10003

WARNING:
THE ALTERATION OF THIS MATERIAL IN ANY WAY, UNLESS DONE UNDER THE DIRECTION OF A COMPARABLE PROFESSIONAL, I.E. ARCHITECT FOR AN ARCHITECT, ENGINEER FOR AN ENGINEER OR LANDSCAPE ARCHITECT FOR A LANDSCAPE ARCHITECT, IS A VIOLATION OF THE NEW YORK STATE EDUCATION LAW AND/OR REGULATIONS AND IS A CLASS 'A' MISDEMEANOR.

CONTRACT: CONSTRUCTION
TITLE: PHASE 1 WORK: DEMOLITION, ASBESTOS REMOVAL, STRENGTHEN FLOOR SLABS & REPLACE WINDOWS
LOCATION: MANHATTAN PSYCHIATRIC CENTER, BUILDING No. 102, 600 EAST 125TH STREET WARDS ISLAND, NY 10035
CLIENT: NYS OFFICE OF MENTAL HEALTH

PROGRESS PRINT

MARK	DATE	DESCRIPTION
12	6-17-2015	BULLETIN NO. 12
9.1	4-29-2015	BULLETIN NO. 9.1
9	4-8-2015	BULLETIN NO. 9
6	3-9-2015	BULLETIN NO. 6
3	7-17-2014	ADDENDUM NO. 3
2	6-30-2014	ADDENDUM NO. 2

PROJECT NUMBER:	44579
DESIGNED BY:	MR
DRAWN BY:	CJL
FIELD CHECK:	ACC/JM
APPROVED:	ACC

SHEET TITLE: STRUCTURAL FOURTH AND FIFTH FLOOR FRAMING PLAN

BUILDING NUMBER: 102
DRAWING NUMBER: S-104-2
SHEET

6/12/2015 4:57:23 PM

TYPICAL FLOOR LEGEND

- EXISTING FLOOR CONSTRUCTION TO REMAIN (SEE DEMOLITION PLANS FOR AREAS OF NEW NONSTRUCTURAL L.W. CONCRETE TOPPING AT PREVIOUSLY REMOVED CERAMIC AND QUARRY TILE)
- EXISTING FLOOR SLAB TO BE REPLACED WITH NEW FLOOR CONSTRUCTION (SEE DETAIL 1/S-301-2), U.O.N.
- AREA OF REMOVED CONCRETE FLOOR FILL TO BE INFILLED WITH NEW REINFORCED L.W. CONCRETE (SEE DETAIL 3/S-301-2)
- 16 WF 36 — DENOTES EXISTING FLOOR BEAM TO REMAIN
- ** 16 WF 36 [...] — DENOTES EXISTING FLOOR BEAM TO REMAIN AND BE REINFORCED WITH WELDED SHEAR STUDS (REFER TO TYPICAL FLOOR RECONSTRUCTION DETAILS)
- * W12x26 — * DENOTES NEW FLOOR BEAM UNDER SOLID CONC. SLAB OR CONC. JOISTS, SEE DETAILS 1 & 4/S-301-2, TOP OF STEEL ELEVATIONS IS 6" BELOW FINISH FLOOR ELEVATION, U.O.N.
- DENOTES SPAN DIRECTION OF METAL DECK FOR NEW CONCRETE SLAB, SEE DETAIL 1/S-301-2
- **(WT-X)** — DENOTES NEW WELDED WT REINFORCING MEMBER, SEE DETAIL 1/S-303-2
- **(CP-X)** — DENOTES NEW WELDED REINFORCING COVER PLATE, SEE DETAIL 1/S-303-2
- 6 / 9 — DENOTES OUTLINE OF FUTURE TYPICAL FLOOR OPENING TO BE SAW CUT FOR **BID PACKAGE NO. 2** IN NEW FLOOR CONSTRUCTION (REFER TO TYPICAL DETAIL 6/S-301-2)

NOTE: SEE DETAIL 1/S-301-2 FOR SUGGESTED SEQUENCE FOR NEW FLOOR CONSTRUCTION.

- 6 — S — DENOTES FUTURE FLOOR OPENING AT BOTTOM OF MECH. SHAFT, OPENING TO BE SAW CUT FOR **BID PACKAGE NO. 2** IN NEW FLOOR CONSTRUCTION (REFER TO TYPICAL DETAIL 6/S-301-2)
- 9 — DENOTES NEW DEPRESSED SLAB AREA (REFER TO ARCHITECTURAL DRAWINGS, AS-100 SERIES, FOR EXACT LOCATIONS AND SIZE)

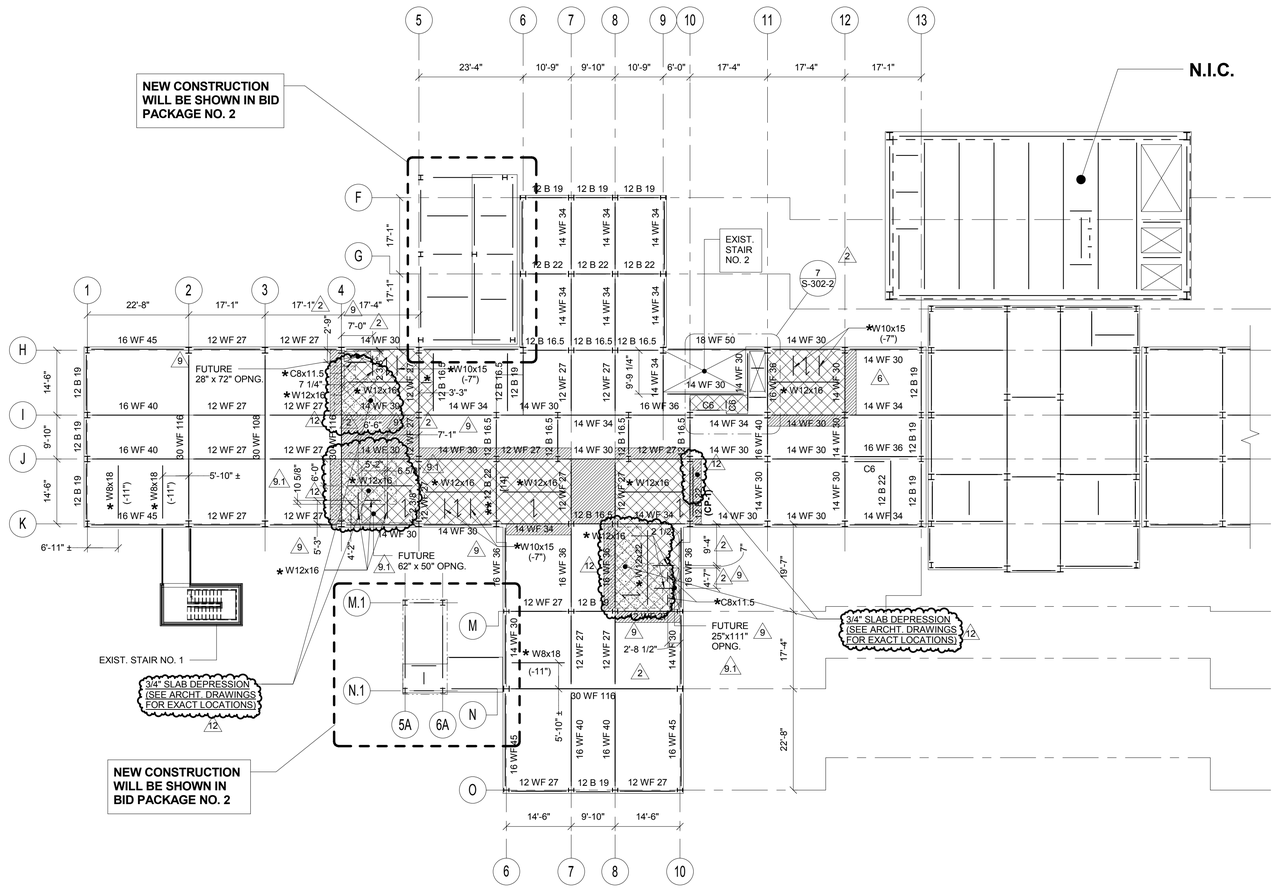

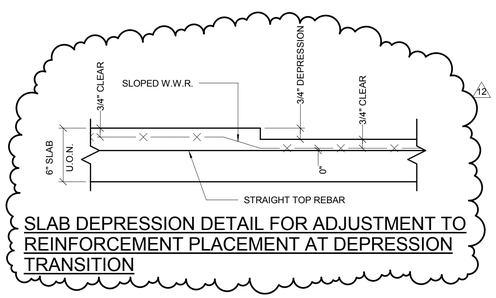

SLAB DEPRESSION DETAIL FOR ADJUSTMENT TO REINFORCEMENT PLACEMENT AT DEPRESSION TRANSITION

STRUCTURAL SIXTH, SEVENTH, AND EIGHTH FLOOR FRAMING PLAN

NOTES:

1. 6TH FLOOR TOP OF CONCRETE FINISH FLOOR EL. +92.50' (U.O.N.)
   7TH FLOOR TOP OF CONCRETE FINISH FLOOR EL. +104.75 (U.O.N.)
   8TH FLOOR TOP OF CONCRETE FINISH FLOOR EL. +117.00 (U.O.N.)
2. NEW CONCRETE SLAB CONSTRUCTION IS 4" LIGHTWEIGHT CONCRETE REINFORCED WITH WWF 6x6 W2.0xW2.0 OVER 2" COMPOSITE METAL DECK LOCK FLOOR 20GA BY USD.
3. WORK ON THIS FLOOR IS LIMITED TO STRENGHTENING OF EXISTING CONCRETE FLOOR (U.O.N.). THE AREA OF WORK IS SHOWN ON THIS DRAWING AS A HATCHED AREA, SEE SHEET LEGEND. FOR THE FLOOR CONSTRUCTION IN THE AREA OF STRENGTHENING, SEE DETAILS 1, 2, 3, 7/S-301-2.
4. WHEN LOCATION OF NEW BEAM IS NOT SHOWN, PLACE IT IN THE MIDDLE OF A FRAMING BAY (BASED ON CENTERLINE OF COLUMNS), OR EQUAL SPACING.
5. TOP OF EXISTING STEEL ELEVATION 6" BELOW FINISH FLOOR ELEVATION, U.O.N.
6. SYMBOL (-11") INDICATES TOP OF NEW STEEL BEAM DISTANCE WITH REFERENCE TO FINISH FLOOR ELEVATION.
7. ALL EXISTING STEEL BEAMS ARE ENCASED IN CONCRETE. FOR NEW BEAM CONNECTION TO EXIST. BEAM, ENCASEMENT SHALL BE REMOVED LOCALLY AND PATCHED AFTER INSTALLATION.

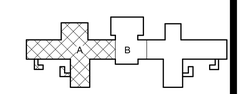

PROJECT NORTH

0 8' 16' 32'
SCALE: 1/16" = 1'-0"

NYS OFFICE OF GENERAL SERVICES
Serving New York
ANDREW M. CUOMO, Governor
ROANN M. DESTITO, Commissioner

CONSULTANTS:
RBSD ARCHITECTS P.C. | STV 100 Years
A Joint Venture
225 Park Avenue South
New York, New York 10003

WARNING:
THE ALTERATION OF THIS MATERIAL IN ANY WAY, UNLESS DONE UNDER THE DIRECTION OF A COMPARABLE PROFESSIONAL, I.E. ARCHITECT FOR AN ARCHITECT, ENGINEER FOR AN ENGINEER OR LANDSCAPE ARCHITECT FOR A LANDSCAPE ARCHITECT, IS A VIOLATION OF THE NEW YORK STATE EDUCATION LAW AND/OR REGULATIONS AND IS A CLASS 'A' MISDEMEANOR.

CONTRACT: CONSTRUCTION
TITLE: PHASE 1 WORK: DEMOLITION, ASBESTOS REMOVAL, STRENGTHEN FLOOR SLABS & REPLACE WINDOWS
LOCATION: MANHATTAN PSYCHIATRIC CENTER, BUILDING No. 102, 600 EAST 125TH STREET WARDS ISLAND, NY 10035
CLIENT: NYS OFFICE OF MENTAL HEALTH

PROGRESS PRINT

MARK	DATE	DESCRIPTION
12	6-17-2015	BULLETIN NO. 12
9.1	4-29-2015	BULLETIN NO. 9.1
9	4-8-2015	BULLETIN NO. 9
6	3-9-2015	BULLETIN NO. 6
3	7-17-2014	ADDENDUM NO. 3
2	6-30-2014	ADDENDUM NO. 2

PROJECT NUMBER: 44579
DESIGNED BY: MR
DRAWN BY: CJL
FIELD CHECK: ACC/JM
APPROVED: ACC

SHEET TITLE: STRUCTURAL SIXTH, SEVENTH, AND EIGHTH FLOOR FRAMING PLAN
BUILDING NUMBER: 102
DRAWING NUMBER: S-105-2
SHEET

6/12/2015 4:57:23 PM

TYPICAL FLOOR LEGEND

- EXISTING FLOOR CONSTRUCTION TO REMAIN (SEE DEMOLITION PLANS FOR AREAS OF NEW NONSTRUCTURAL L.W. CONCRETE TOPPING AT PREVIOUSLY REMOVED CERAMIC AND QUARRY TILE)
- 3 — EXISTING FLOOR SLAB TO BE REPLACED WITH NEW FLOOR CONSTRUCTION (SEE DETAIL 1/S-301-2), U.O.N.
- AREA OF REMOVED CONCRETE FLOOR FILL TO BE INFILLED WITH NEW REINFORCED L.W. CONCRETE (SEE DETAIL 3/S-301-2)
- 16 WF 36 — DENOTES EXISTING FLOOR BEAM TO REMAIN
- ** 16 WF 36 [...] — DENOTES EXISTING FLOOR BEAM TO REMAIN AND BE REINFORCED WITH WELDED SHEAR STUDS (REFER TO TYPICAL FLOOR RECONSTRUCTION DETAILS)
- * W12x26 — * DENOTES NEW FLOOR BEAM UNDER SOLID CONC. SLAB OR CONC. JOISTS, SEE DETAILS 1 & 4/S-301-2, TOP OF STEEL ELEVATIONS IS 6" BELOW FINISH FLOOR ELEVATION, U.O.N.
- DENOTES SPAN DIRECTION OF METAL DECK FOR NEW CONCRETE SLAB, SEE DETAIL 1/S-301-2
- (WT-X) — DENOTES NEW WELDED WT REINFORCING MEMBER, SEE DETAIL 1/S-303-2
- (CP-X) — DENOTES NEW WELDED REINFORCING COVER PLATE, SEE DETAIL 1/S-303-2
- 6, 9 — DENOTES OUTLINE OF FUTURE TYPICAL FLOOR OPENING TO BE SAW CUT FOR **BID PACKAGE NO. 2** IN NEW FLOOR CONSTRUCTION (REFER TO TYPICAL DETAIL 6/S-301-2)

NOTE: SEE DETAIL 1/S-301-2 FOR SUGGESTED SEQUENCE FOR NEW FLOOR CONSTRUCTION.

- 6 — DENOTES FUTURE FLOOR OPENING AT BOTTOM OF MECH. SHAFT, OPENING TO BE SAW CUT FOR **BID PACKAGE NO. 2** IN NEW FLOOR CONSTRUCTION (REFER TO TYPICAL DETAIL 6/S-301-2)
- 9 — DENOTES NEW DEPRESSED SLAB AREA (REFER TO ARCHITECTURAL DRAWINGS, AS-100 SERIES, FOR EXACT LOCATIONS AND SIZE)

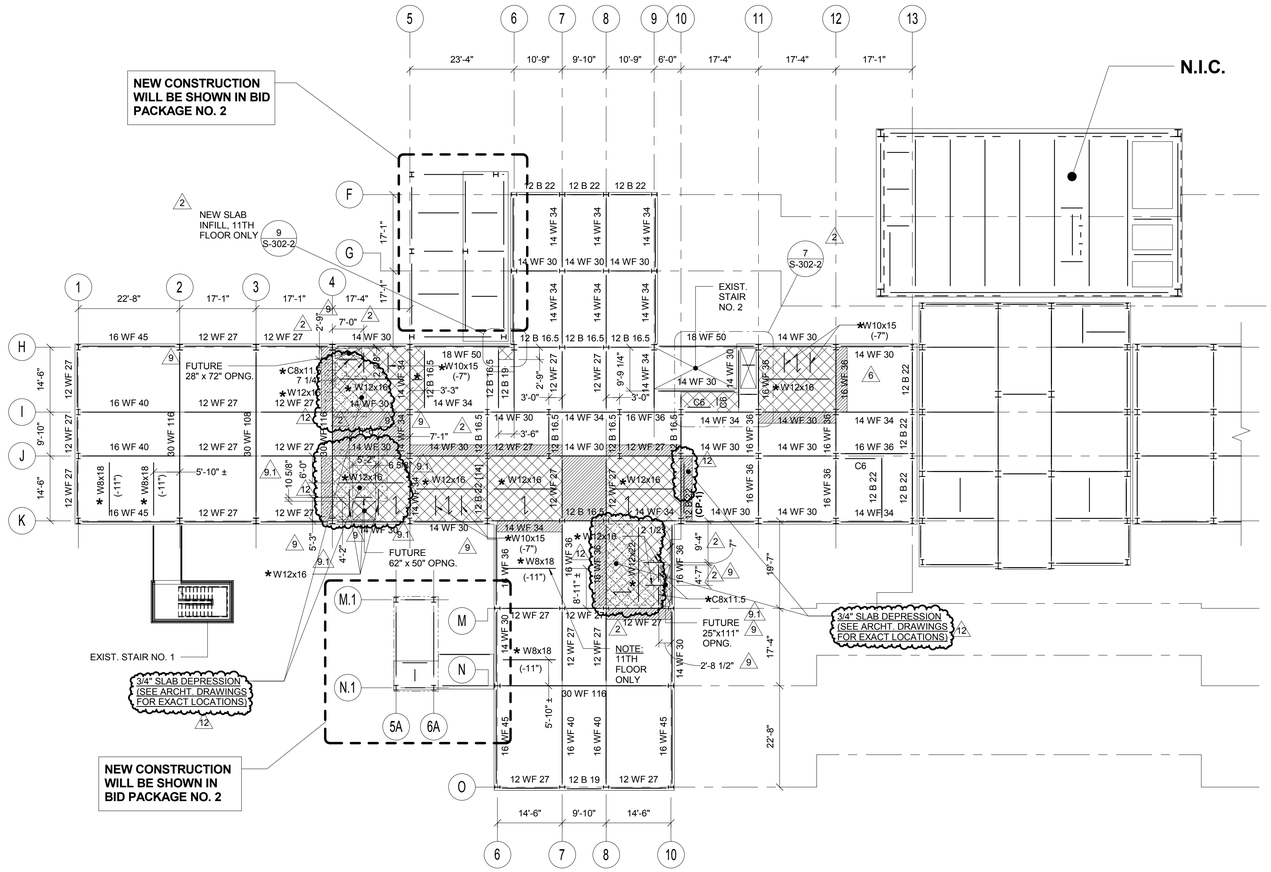

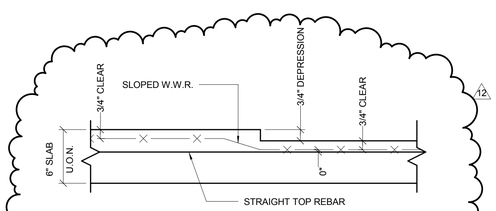

SLAB DEPRESSION DETAIL FOR ADJUSTMENT TO REINFORCEMENT PLACEMENT AT DEPRESSION TRANSITION

STRUCTURAL NINTH, TENTH AND ELEVENTH FLOOR FRAMING PLAN

NOTE:

1. 9TH FLOOR TOP OF CONCRETE FINISH FLOOR EL. +129.25' (U.O.N.)
   10TH FLOOR TOP OF CONCRETE FINISH FLOOR EL. +141.50' (U.O.N.)
   11TH FLOOR TOP OF CONCRETE FINISH FLOOR EL. +153.75' (U.O.N.)
2. NEW CONCRETE SLAB CONSTRUCTION IS 4" LIGHTWEIGHT CONCRETE REINFORCED WITH WWF6x6 W2.0xW2.0 OVER 2" COMPOSITE METAL DECK LOCK FLOOR 20GA BY USD.
3. WORK ON THIS FLOOR IS LIMITED TO STRENGHTENING OF EXISTING CONCRETE FLOOR (U.O.N.). THE AREA OF WORK IS SHOWN ON THIS DRAWING AS A HATCHED AREA, SEE SHEET LEGEND. FOR THE FLOOR CONSTRUCTION IN THE AREA OF STRENGTHENING, SEE DETAILS 1, 2, 3, 7/S-301-2.
4. WHEN LOCATION OF NEW BEAM IS NOT SHOWN, PLACE IT IN THE MIDDLE OF A FRAMING BAY (BASED ON CENTERLINE OF COLUMNS), OR EQUAL SPACING.
5. TOP OF EXISTING STEEL ELEVATION 6" BELOW FINISH FLOOR ELEVATION, U.O.N.
6. SYMBOL (-11") INDICATES TOP OF NEW STEEL BEAM DISTANCE WITH REFERENCE TO FINISH FLOOR ELEVATION.
7. ALL EXISTING STEEL BEAMS ARE ENCASED IN CONCRETE. FOR NEW BEAM CONNECTION TO EXIST. BEAM, ENCASEMENT SHALL BE REMOVED LOCALLY AND PATCHED AFTER INSTALLATION.

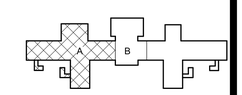

PROJECT NORTH

0 8' 16' 32'
SCALE: 1/16" = 1'-0"

NYS OFFICE OF GENERAL SERVICES
Serving New York
ANDREW M. CUOMO
Governor
ROANN M. DESTITO
Commissioner

CONSULTANTS:
RBSD ARCHITECTS P.C. | STV 100 Years
A Joint Venture
225 Park Avenue South
New York, New York 10003

WARNING:
THE ALTERATION OF THIS MATERIAL IN ANY WAY, UNLESS DONE UNDER THE DIRECTION OF A COMPARABLE PROFESSIONAL, I.E. ARCHITECT FOR AN ARCHITECT, ENGINEER FOR AN ENGINEER OR LANDSCAPE ARCHITECT FOR A LANDSCAPE ARCHITECT, IS A VIOLATION OF THE NEW YORK STATE EDUCATION LAW AND/OR REGULATIONS AND IS A CLASS 'A' MISDEMEANOR.

CONTRACT: CONSTRUCTION

TITLE: PHASE 1 WORK: DEMOLITION, ASBESTOS REMOVAL, STRENGTHEN FLOOR SLABS & REPLACE WINDOWS

LOCATION: MANHATTAN PSYCHIATRIC CENTER, BUILDING No. 102
600 EAST 125TH STREET WARDS ISLAND, NY 10035

CLIENT: NYS OFFICE OF MENTAL HEALTH

PROGRESS PRINT

MARK	DATE	DESCRIPTION
12	6-17-2015	BULLETIN NO. 12
9.1	4-29-2015	BULLETIN NO. 9.1
9	4-8-2015	BULLETIN NO. 9
6	3-9-2015	BULLETIN NO. 6
3	7-17-2014	ADDENDUM NO. 3
2	6-30-2014	ADDENDUM NO. 2

PROJECT NUMBER:	44579
DESIGNED BY:	MR
DRAWN BY:	CJL
FIELD CHECK:	ACC/JM
APPROVED:	ACC

SHEET TITLE: STRUCTURAL NINTH, TENTH AND ELEVENTH FLOOR FRAMING PLAN

BUILDING NUMBER: 102

DRAWING NUMBER: S-106-2

SHEET

6/12/2015 4:57:23 PM

TYPICAL FLOOR LEGEND

- EXISTING FLOOR CONSTRUCTION TO REMAIN (SEE DEMOLITION PLANS FOR AREAS OF NEW NONSTRUCTURAL L.W. CONCRETE TOPPING AT PREVIOUSLY REMOVED CERAMIC AND QUARRY TILE)
- 3 — EXISTING FLOOR SLAB TO BE REPLACED WITH NEW FLOOR CONSTRUCTION (SEE DETAIL 1/S-301-2), U.O.N.
- AREA OF REMOVED CONCRETE FLOOR FILL TO BE INFILLED WITH NEW REINFORCED L.W. CONCRETE (SEE DETAIL 3/S-301-2)
- 16 WF 36 — DENOTES EXISTING FLOOR BEAM TO REMAIN
- ** 16 WF 36 [...] — DENOTES EXISTING FLOOR BEAM TO REMAIN AND BE REINFORCED WITH WELDED SHEAR STUDS (REFER TO TYPICAL FLOOR RECONSTRUCTION DETAILS)
- * W12x26 — * DENOTES NEW FLOOR BEAM UNDER SOLID CONC. SLAB OR CONC. JOISTS, SEE DETAILS 1 & 4/S-301-2, TOP OF STEEL ELEVATIONS IS 6" BELOW FINISH FLOOR ELEVATION, U.O.N.
- DENOTES SPAN DIRECTION OF METAL DECK FOR NEW CONCRETE SLAB, SEE DETAIL 1/S-301-2
- (WT-X) — DENOTES NEW WELDED WT REINFORCING MEMBER, SEE DETAIL 1/S-303-2
- (CP-X) — DENOTES NEW WELDED REINFORCING COVER PLATE, SEE DETAIL 1/S-303-2
- 6, 9 — DENOTES OUTLINE OF FUTURE TYPICAL FLOOR OPENING TO BE SAW CUT FOR **BID PACKAGE NO. 2** IN NEW FLOOR CONSTRUCTION (REFER TO TYPICAL DETAIL 6/S-301-2)

NOTE: SEE DETAIL 1/S-301-2 FOR SUGGESTED SEQUENCE FOR NEW FLOOR CONSTRUCTION.

- 6 — S — DENOTES FUTURE FLOOR OPENING AT BOTTOM OF MECH. SHAFT, OPENING TO BE SAW CUT FOR **BID PACKAGE NO. 2** IN NEW FLOOR CONSTRUCTION (REFER TO TYPICAL DETAIL 6/S-301-2)
- 9 — DENOTES NEW DEPRESSED SLAB AREA (REFER TO ARCHITECTURAL DRAWINGS, AS-100 SERIES, FOR EXACT LOCATIONS AND SIZE)

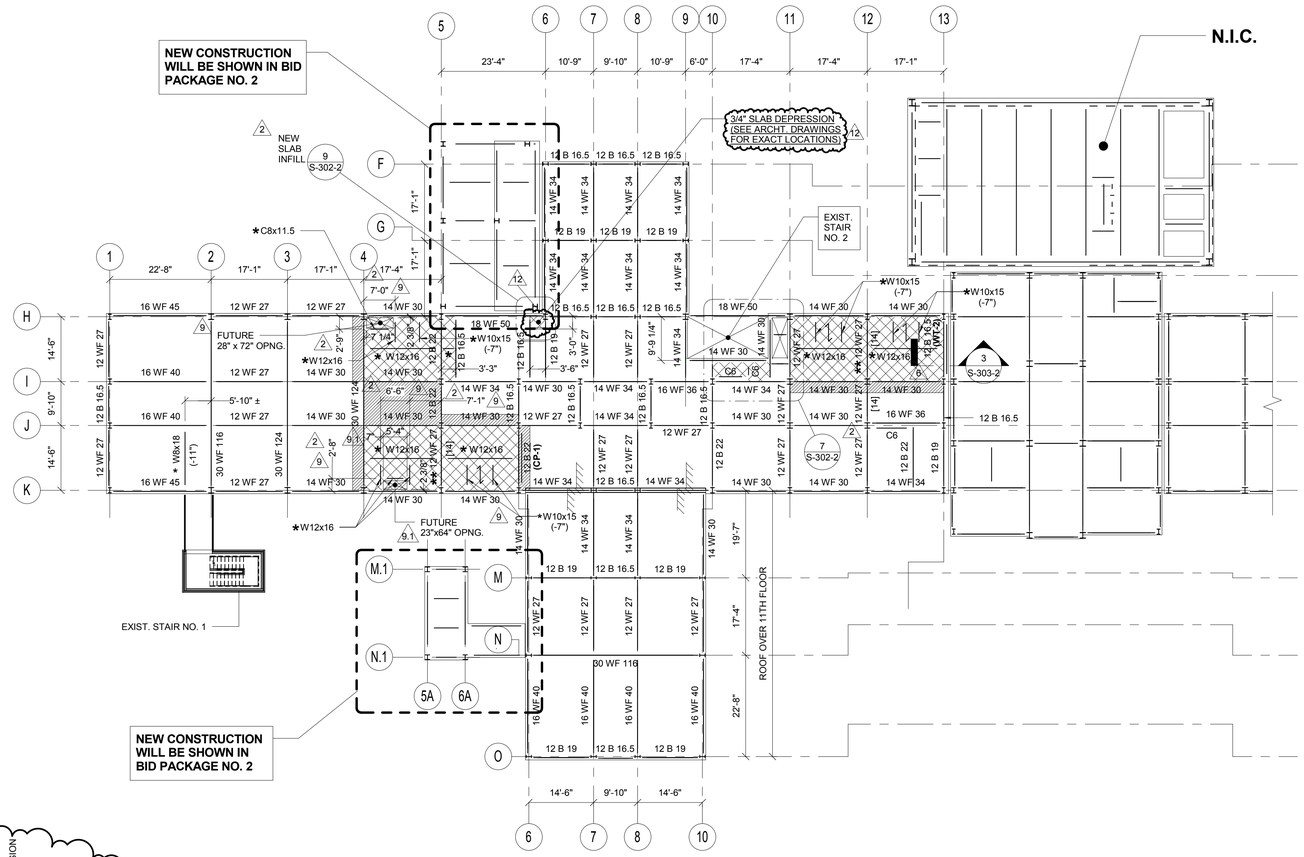

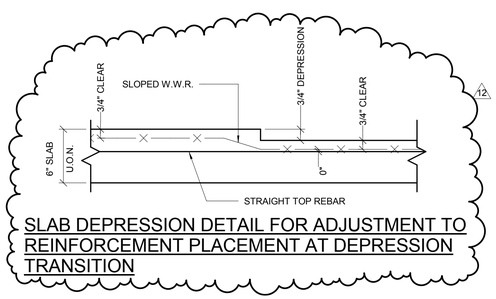

SLAB DEPRESSION DETAIL FOR ADJUSTMENT TO REINFORCEMENT PLACEMENT AT DEPRESSION TRANSITION

STRUCTURAL TWELFTH FLOOR FRAMING PLAN

NOTES:

1. TOP OF CONCRETE FINISH FLOOR EL. + 166.0' (U.O.N.)
2. NEW CONCRETE SLAB CONSTRUCTION IS 4" LIGHTWEIGHT CONCRETE REINFORCED WITH WWF6x6 W2.0xW2.0 OVER 2" COMPOSITE METAL DECK LOCK FLOOR 20GA BY USD.
3. WORK ON THIS FLOOR IS LIMITED TO STRENGHTENING OF EXISTING CONCRETE FLOOR (U.O.N.). THE AREA OF WORK IS SHOWN ON THIS DRAWING AS A HATCHED AREA. SEE SHEET LEGEND. FOR THE FLOOR CONSTRUCTION IN THE AREA OF STRENGTHENING, SEE DETAILS 1, 2, 3, 7/S-301-2.
4. WHEN LOCATION OF NEW BEAM IS NOT SHOWN, PLACE IT IN THE MIDDLE OF A FRAMING BAY (BASED ON CENTERLINE OF COLUMNS), OR EQUAL SPACING.
5. TOP OF EXISTING STEEL ELEVATION 6" BELOW FINISH FLOOR ELEVATION, U.O.N.
6. SYMBOL (-11") INDICATES TOP OF NEW STEEL BEAM DISTANCE WITH REFERENCE TO FINISH FLOOR ELEVATION.
7. ALL EXISTING STEEL BEAMS ARE ENCASED IN CONCRETE. FOR NEW BEAM CONNECTION TO EXIST. BEAM, ENCASEMENT SHALL BE REMOVED LOCALLY AND PATCHED AFTER INSTALLATION.

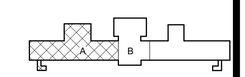

PROJECT NORTH

0 8' 16' 32'
SCALE: 1/16" = 1'-0"

NYS OFFICE OF GENERAL SERVICES
Serving New York
ANDREW M. CUOMO, Governor
ROANN M. DESTITO, Commissioner

CONSULTANTS:
RBSD ARCHITECTS P.C. | STV 100 Years
A Joint Venture
225 Park Avenue South
New York, New York 10003

WARNING:
THE ALTERATION OF THIS MATERIAL IN ANY WAY, UNLESS DONE UNDER THE DIRECTION OF A COMPARABLE PROFESSIONAL, I.E. ARCHITECT FOR AN ARCHITECT, ENGINEER FOR AN ENGINEER OR LANDSCAPE ARCHITECT FOR A LANDSCAPE ARCHITECT, IS A VIOLATION OF THE NEW YORK STATE EDUCATION LAW AND/OR REGULATIONS AND IS A CLASS 'A' MISDEMEANOR.

CONTRACT: CONSTRUCTION
TITLE: PHASE 1 WORK: DEMOLITION, ASBESTOS REMOVAL, STRENGTHEN FLOOR SLABS & REPLACE WINDOWS
LOCATION: MANHATTAN PSYCHIATRIC CENTER, BUILDING No. 102, 600 EAST 125TH STREET WARDS ISLAND, NY 10035
CLIENT: NYS OFFICE OF MENTAL HEALTH

PROGRESS PRINT

MARK	DATE	DESCRIPTION
12	6-17-2015	BULLETIN NO. 12
9.1	4-29-2015	BULLETIN NO. 9.1
9	4-8-2015	BULLETIN NO. 9
6	3-9-2015	BULLETIN NO. 6
3	7-17-2014	ADDENDUM NO. 3
2	6-30-2014	ADDENDUM NO. 2

PROJECT NUMBER:	44579
DESIGNED BY:	MR
DRAWN BY:	CJL
FIELD CHECK:	ACC/JM
APPROVED:	ACC

SHEET TITLE: STRUCTURAL TWELFTH FLOOR FRAMING PLAN

BUILDING NUMBER: 102
DRAWING NUMBER: S-107-2
SHEET

6/19/2015 4:33:27 PM

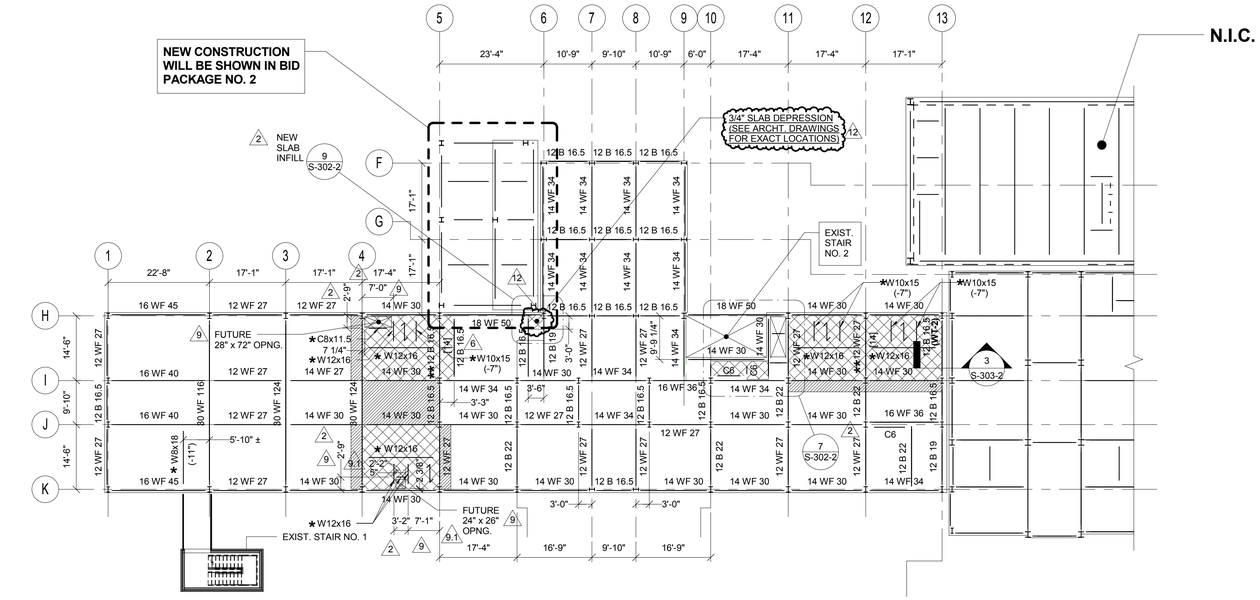

1 STRUCTURAL THIRTEENTH FLOOR FRAMING PLAN

1/16" = 1'-0"

NOTES:

1. TOP OF CONCRETE FINISH FLOOR EL. +178.25'
2. NEW CONCRETE SLAB CONSTRUCTION IS 4" LIGHTWEIGHT CONCRETE REINFORCED WITH WWF6x6 W2.0xW2.0 OVER 2" COMPOSITE METAL DECK LOCK FLOOR 20GA BY USD.
3. WORK ON THIS FLOOR IS LIMITED TO STRENGHTENING OF EXISTING CONCRETE FLOOR (U.O.N.). THE AREA OF WORK IS SHOWN ON THIS DRAWING AS A HATCHED AREA, SEE SHEET LEGEND. FOR THE FLOOR CONSTRUCTION IN THE AREA OF STRENGTHENING, SEE DETAILS 1, 2, 3, 7/S-301-2.
4. WHEN LOCATION OF NEW BEAM IS NOT SHOWN, PLACE IT IN THE MIDDLE OF A FRAMING BAY (BASED ON CENTERLINE OF COLUMNS), OR EQUAL SPACING.
5. TOP OF EXISTING STEEL ELEVATION 6" BELOW FINISH FLOOR ELEVATION, U.O.N.
6. SYMBOL (-11") INDICATES TOP OF NEW STEEL BEAM DISTANCE WITH REFERENCE TO FINISH FLOOR ELEVATION.
7. ALL EXISTING STEEL BEAMS ARE ENCASED IN CONCRETE. FOR NEW BEAM CONNECTION TO EXIST. BEAM, ENCASEMENT SHALL BE REMOVED LOCALLY AND PATCHED AFTER INSTALLATION.

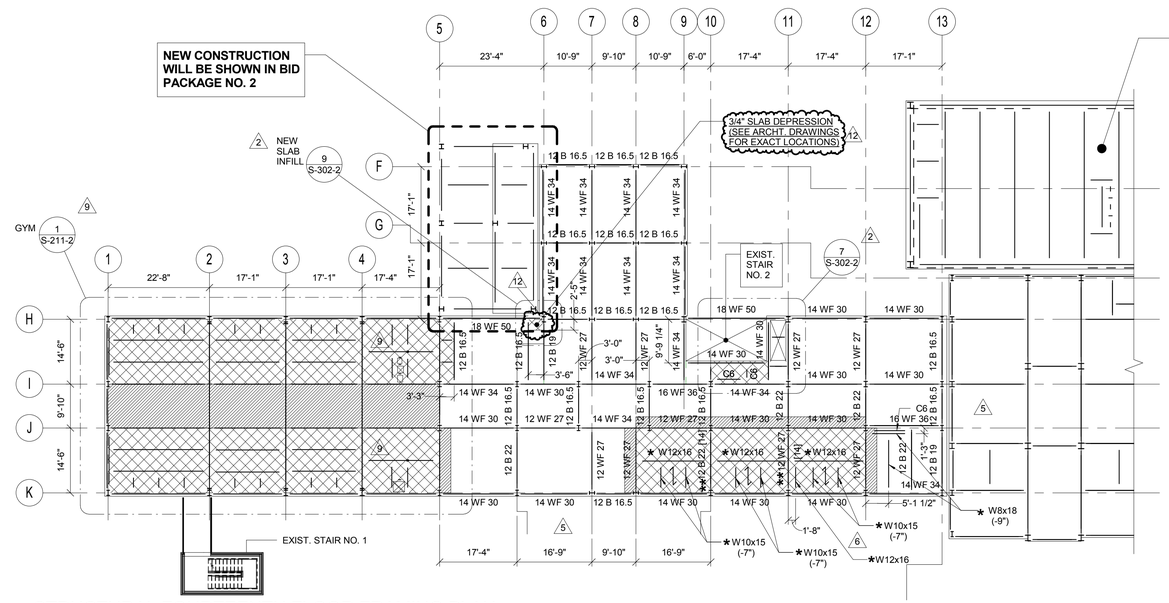

2 STRUCTURAL FOURTEENTH FLOOR FRAMING PLAN

1/16" = 1'-0"

NOTES:

1. TOP OF CONCRETE FINISH FLOOR EL. +190.50'
2. NEW CONCRETE SLAB CONSTRUCTION IS 4" LIGHTWEIGHT CONCRETE REINFORCED WITH WWF6x6 W2.0xW2.0 OVER 2" COMPOSITE METAL DECK LOCK FLOOR 20GA BY USD.
3. WORK ON THIS FLOOR IS LIMITED TO STRENGHTENING OF EXISTING CONCRETE FLOOR (U.O.N.). THE AREA OF WORK IS SHOWN ON THIS DRAWING AS A HATCHED AREA, SEE SHEET LEGEND. FOR THE FLOOR CONSTRUCTION IN THE AREA OF STRENGTHENING, SEE DETAILS 1, 2, 3, 7/S-301-2.
4. WHEN LOCATION OF NEW BEAM IS NOT SHOWN, PLACE IT IN THE MIDDLE OF A FRAMING BAY (BASED ON CENTERLINE OF COLUMNS), OR EQUAL SPACING.
5. TOP OF EXISTING STEEL ELEVATION 6" BELOW FINISH FLOOR ELEVATION, U.O.N.
6. SYMBOL (-11") INDICATES TOP OF NEW STEEL BEAM DISTANCE WITH REFERENCE TO FINISH FLOOR ELEVATION.
7. ALL EXISTING STEEL BEAMS ARE ENCASED IN CONCRETE. FOR NEW BEAM CONNECTION TO EXIST. BEAM, ENCASEMENT SHALL BE REMOVED LOCALLY AND PATCHED AFTER INSTALLATION.

TYPICAL FLOOR LEGEND

- EXISTING FLOOR CONSTRUCTION TO REMAIN (SEE DEMOLITION PLANS FOR AREAS OF NEW NONSTRUCTURAL L.W. CONCRETE TOPPING AT PREVIOUSLY REMOVED CERAMIC AND QUARRY TILE)
- (3) EXISTING FLOOR SLAB TO BE REPLACED WITH NEW FLOOR CONSTRUCTION (SEE DETAIL 1/S-301-2), U.O.N.
- AREA OF REMOVED CONCRETE FLOOR FILL TO BE INFILLED WITH NEW REINFORCED L.W. CONCRETE (SEE DETAIL 3/S-301-2)
- 16 WF 36 — DENOTES EXISTING FLOOR BEAM TO REMAIN
- ** 16 WF 36 [...] — DENOTES EXISTING FLOOR BEAM TO REMAIN AND BE REINFORCED WITH WELDED SHEAR STUDS (REFER TO TYPICAL FLOOR RECONSTRUCTION DETAILS)
- * W12x26 — * DENOTES NEW FLOOR BEAM UNDER SOLID CONC. SLAB OR CONC. JOISTS, SEE DETAILS 1 & 4/S-301-2, TOP OF STEEL ELEVATIONS IS 6" BELOW FINISH FLOOR ELEVATION, U.O.N.
- DENOTES SPAN DIRECTION OF METAL DECK FOR NEW CONCRETE SLAB, SEE DETAIL 1/S-301-2
- **(WT-X)** DENOTES NEW WELDED WT REINFORCING MEMBER, SEE DETAIL 1/S-303-2
- **(CP-X)** DENOTES NEW WELDED REINFORCING COVER PLATE, SEE DETAIL 1/S-303-2
- (6) (9) DENOTES OUTLINE OF FUTURE TYPICAL FLOOR OPENING TO BE SAW CUT FOR **BID PACKAGE NO. 2** IN NEW FLOOR CONSTRUCTION (REFER TO TYPICAL DETAIL 6/S-301-2)

NOTE: SEE DETAIL 1/S-301-2 FOR SUGGESTED SEQUENCE FOR NEW FLOOR CONSTRUCTION.

(6) (9) S DENOTES FUTURE FLOOR OPENING AT BOTTOM OF MECH. SHAFT, OPENING TO BE SAW CUT FOR **BID PACKAGE NO. 2** IN NEW FLOOR CONSTRUCTION (REFER TO TYPICAL DETAIL 6/S-301-2)

- DENOTES NEW DEPRESSED SLAB AREA (REFER TO ARCHITECTURAL DRAWINGS, AS-100 SERIES, FOR EXACT LOCATIONS AND SIZE)

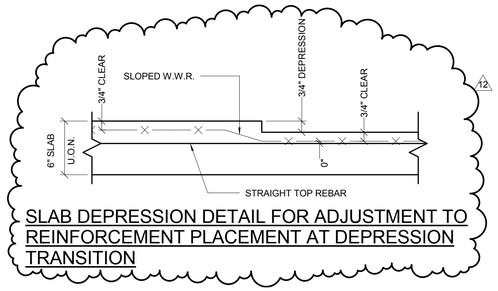

SLAB DEPRESSION DETAIL FOR ADJUSTMENT TO REINFORCEMENT PLACEMENT AT DEPRESSION TRANSITION

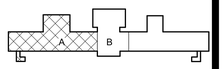

PROJECT NORTH

0 8' 16' 32'

SCALE: 1/16" = 1'-0"

NYS OFFICE OF GENERAL SERVICES

Serving New York

ANDREW M. CUOMO
Governor
ROANN M. DESTITO
Commissioner

CONSULTANTS:

RBSD ARCHITECTS P.C. | STV 100 Years

A Joint Venture

225 Park Avenue South
New York, New York 10003

WARNING:

THE ALTERATION OF THIS MATERIAL IN ANY WAY, UNLESS DONE UNDER THE DIRECTION OF A COMPARABLE PROFESSIONAL, I.E. ARCHITECT FOR AN ARCHITECT, ENGINEER FOR AN ENGINEER OR LANDSCAPE ARCHITECT FOR A LANDSCAPE ARCHITECT, IS A VIOLATION OF THE NEW YORK STATE EDUCATION LAW AND/OR REGULATIONS AND IS A CLASS 'A' MISDEMEANOR.

CONTRACT: CONSTRUCTION

TITLE: PHASE 1 WORK: DEMOLITION, ASBESTOS REMOVAL, STRENGTHEN FLOOR SLABS & REPLACE WINDOWS

LOCATION: MANHATTAN PSYCHIATRIC CENTER, BUILDING No. 102
600 EAST 125TH STREET WARDS ISLAND, NY 10035

CLIENT: NYS OFFICE OF MENTAL HEALTH

PROGRESS PRINT

MARK	DATE	DESCRIPTION
12	6-17-2015	BULLETIN NO. 12
9.1	4-29-2015	BULLETIN NO. 9.1
9	4-8-2015	BULLETIN NO. 9
6	3-9-2015	BULLETIN NO. 6
5	2-13-2015	BULLETIN NO. 5
3	7-17-2014	ADDENDUM NO. 3
2	6-30-2014	ADDENDUM NO. 2

PROJECT NUMBER:	44579
DESIGNED BY:	MR
DRAWN BY:	CJL
FIELD CHECK:	ACC/JM
APPROVED:	ACC

SHEET TITLE:

STRUCTURAL THIRTEENTH AND FOURTEENTH FLOOR FRAMING PLANS

BUILDING NUMBER: 102

DRAWING NUMBER: S-108-2

SHEET

6/19/2015 4:33:28 PM

GENERAL

B 12

G-001	TITLE SHEET
G-002	LIST OF DRAWING
G-003	SITE LOGISTIC PLAN
G-004	HOIST LAYOUT PLAN
G-005	SYMBOLS, ABBREVIATIONS, GENERAL NOTES
G-006	STANDARD ABBREVIATIONS & GENERAL SYMBOLS
G-007	EGRESS PLAN DURING BASEMENT DEMOLITION

STRUCTURE

S-001	GENERAL STRUCTURAL NOTES I
S-002	GENERAL STRUCTURAL NOTES II
S-003	STRUCTURAL LOADING CRITERIA, LEGEND, AND ABBREVIATIONS
S-100-2	STRUCTURAL BASEMENT FLOOR FRAMING PLAN
S-101-2	STRUCTURAL FIRST FLOOR FRAMING PLAN
S-102-2	STRUCTURAL SECOND FLOOR FRAMING PLAN
S-103-2	STRUCTURAL THIRD FLOOR FRAMING PLAN
S-104-2	STRUCTURAL FOURTH AND FIFTH FLOOR FRAMING PLAN
S-105-2	STRUCTURAL SIXTH, SEVENTH, AND EIGHTH FLOOR FRAMING PLAN
S-106-2	STRUCTURAL NINTH, TENTH AND ELEVENTH FLOOR FRAMING PLAN
S-107-2	STRUCTURAL TWELFTH FLOOR FRAMING PLAN
S-108-2	STRUCTURAL THIRTEENTH AND FOURTEENTH FLOOR FRAMING PLANS
S-109-2	STRUCTURAL FIFTEENTH AND SIXTEENTH FLOOR FRAMING PLANS
S-211-2	GYM FRAMING PLANS
S-212-2	GYM FRAMING ELEVATIONS AND DETAILS
S-213-2	GYM FRAMING SECTIONS AND DETAILS
S-214-2	GYM FRAMING SECTIONS AND DETAILS II
S-301-2	TYPICAL FLOOR RECONSTRUCTION DETAILS I
S-302-2	TYPICAL FLOOR RECONSTRUCTION DETAILS II
S-303-2	TYPICAL FLOOR RECONSTRUCTION DETAILS III
SD-001	DEMOLITION NOTES AND DETAILS I
SD-002	DEMOLITION NOTES AND DETAILS II
SD-100-2	STRUCTURAL BASEMENT FLOOR DEMOLITION PLAN
SD-101-2	STRUCTURAL FIRST FLOOR DEMOLITION PLAN
SD-102-2	STRUCTURAL SECOND FLOOR DEMOLITION PLAN
SD-103-2	STRUCTURAL THIRD FLOOR DEMOLITION PLAN
SD-104-2	STRUCTURAL FOURTH AND FIFTH FLOOR DEMOLITION PLAN
SD-105-2	STRUCTURAL SIXTH, SEVENTH AND EIGHTH FLOOR DEMOLITION PLAN
SD-106-2	STRUCTURAL NINTH, TENTH, AND ELEVENTH FLOOR DEMOLITION PLAN
SD-107-2	STRUCTURAL TWELFTH FLOOR DEMOLITION PLAN
SD-108-2	STRUCTURAL THIRTEENTH AND FOURTEENTH FLOOR DEMOLITION PLANS
SD-109-2	STRUCTURAL FIFTEENTH AND SIXTEENTH FLOOR DEMOLITION PLANS
SD-211-2	GYM DEMOLITION PLANS
SD-231-2	STAIR NO. 12 DEMOLITION PLANS

DEMOLITION & WINDOW INSTALLATION

AD-100-2	BASEMENT DEMOLITION PLAN
AD-100-2A	BASEMENT DEMOLITION PLAN, PART "A"
AD-100-2B	BASEMENT DEMOLITION PLAN, PART "B"
AD-100-2C	BASEMENT DEMOLITION PLAN, PART "C"
AD-100-2D	BASEMENT DEMOLITION PLAN, PART "D"
AD-100-2E	BASEMENT DEMOLITION PLAN, PART "E"
AD-101-2	FIRST FLOOR DEMOLITION PLAN
AD-101-2A	FIRST FLOOR DEMOLITION PLAN, PART "A"
AD-101-2B	FIRST FLOOR DEMOLITION PLAN, PART "B"
AD-101-2C	FIRST FLOOR DEMOLITION PLAN, PART "C"
AD-101-2D	FIRST FLOOR DEMOLITION PLAN, PART "D"
AD-101-2E	FIRST FLOOR DEMOLITION PLAN, PART "E"
AD-102-2	SECOND FLOOR DEMOLITION PLAN
AD-102-2A	SECOND FLOOR DEMOLITION PLAN, PART "A"
AD-102-2B	SECOND FLOOR DEMOLITION PLAN, PART "B"
AD-102-2C	SECOND FLOOR DEMOLITION PLAN, PART "C"
AD-102-2D	SECOND FLOOR DEMOLITION PLAN, PART "D"
AD-103-2	THIRD FLOOR DEMOLITION PLAN
AD-103-2A	THIRD FLOOR DEMOLITION PLAN, PART "A"
AD-103-2B	THIRD FLOOR DEMOLITION PLAN, PART "B"
AD-103-2C	THIRD FLOOR DEMOLITION PLAN, PART "C"
AD-104-2	FOURTH FLOOR DEMOLITION PLAN
AD-105-2	FIFTH FLOOR DEMOLITION PLAN
AD-106-2	SIXTH FLOOR DEMOLITION PLAN
AD-107-2	SEVENTH FLOOR DEMOLITION PLAN
AD-108-2	EIGHTH FLOOR DEMOLITION PLAN
AD-109-2	NINTH FLOOR DEMOLITION PLAN
AD-110-2	TENTH FLOOR DEMOLITION PLAN
AD-111-2	ELEVENTH FLOOR DEMOLITION PLAN
AD-112-2	TWELFTH FLOOR DEMOLITION PLAN
AD-113-2	THIRTEENTH FLOOR DEMOLITION PLAN
AD-114-2	FOURTEENTH DEMOLITION FLOOR PLAN
AD-115-2	FIFTEENTH FLOOR DEMOLITION PLAN

DEMOLITION & WINDOW INSTALLATION

AD-116-2	SIXTEENTH FLOOR DEMOLITION PLAN
AD-300-2	BASEMENT FLOOR SCHLUTER SYSTEM DEPRESSION PLAN
AD-301-2	FIRST FLOOR SCHLUTER SYSTEM DEPRESSION PLAN
AD-302-2	SECOND FLOOR SCHLUTER SYSTEM DEPRESSION PLAN
AD-303-2	THIRD TO FIFTH FLOOR SCHLUTER SYSTEM DEPRESSION PLAN
AD-304-2	SIXTH TO ELEVENTH SCHLUTER SYSTEM DEPRESSION PLAN
AD-305-2	TWELFTH TO FOURTEENTH FLOOR SCHLUTER SYSTEM DEPRESSION PLAN
AD-400-2	PARTIAL BLDG. ELEVATION - WINDOW REMOVAL
AD-401-2	PARTIAL BLDG. ELEVATION - WINDOW REMOVAL
AD-402-2	PARTIAL BLDG. ELEVATION - WINDOW REMOVAL
AD-403-2	PARTIAL BLDG. ELEVATION - WINDOW REMOVAL
AD-800	DEMOLITION DETAILS
AD-800.1	DEMOLITION DETAILS
WI-100-2	BASEMENT WINDOW INSTALLATION PLAN
WI-101-2	FIRST FLOOR WINDOW INSTALLATION PLAN
WI-102-2	SECOND FLOOR WINDOW INSTALLATION PLAN
WI-400-2	PARTIAL BLDG. ELEVATION - WINDOW INSTALLATION
WI-401-2	PARTIAL BLDG. ELEVATION - WINDOW INSTALLATION
WI-402-2	PARTIAL BLDG. ELEVATION - WINDOW INSTALLATION
WI-403-2	PARTIAL BLDG. ELEVATION - WINDOW INSTALLATION
WI-801	WINDOW DETAILS
WI-802	WINDOW DETAILS

HAZARDOUS MATERIALS

H-100-2A	GENERAL NOTES AND TABLE BASEMENT PLAN
H-100-2B	HAZARDOUS MATERIAL BASEMENT PLAN
H-100-2A-1	GENERAL NOTES AND TABLE BASEMENT PLAN 102/103 CONNECTOR
H-100-2B-1	HAZARDOUS MATERIAL BASEMENT APPENDAGE PLAN
H-101-2A	GENERAL NOTES AND TABLE FIRST FLOOR PLAN
H-101-2B	HAZARDOUS MATERIALS FIRST FLOOR PLAN
H-102-2A	GENERAL NOTES AND TABLE SECOND FLOOR PLAN
H-102-2B	HAZARDOUS MATERIAL SECOND FLOOR PLAN
H-200	WINDOW SCHEDULE

MECHANICAL

MD-001	HVAC DEMOLITION DETAILS, LEGENDS & GENERAL NOTES
MD-002	HVAC DEMOLITION SYMBOLS AND LEGENDS
MD-099-2	HVAC DEMOLITION WORK SUB-BASEMENT PLAN
MD-100-2	HVAC DEMOLITION WORK BASEMENT PLAN
MD-101-2	HVAC DEMOLITION WORK FIRST FLOOR PLAN
MD-102-2	HVAC DEMOLITION WORK SECOND FLOOR PLAN
MD-103-2	HVAC DEMOLITION WORK THIRD FLOOR PLAN
MD-104-2	HVAC DEMOLITION WORK FOURTH FLOOR PLAN
MD-105-2	HVAC DEMOLITION WORK FIFTH FLOOR PLAN
MD-106-2	HVAC DEMOLITION WORK SIXTH FLOOR PLAN
MD-107-2	HVAC DEMOLITION WORK SEVENTH FLOOR PLAN
MD-108-2	HVAC DEMOLITION WORK EIGHTH FLOOR PLAN
MD-109-2	HVAC DEMOLITION WORK NINTH FLOOR PLAN
MD-110-2	HVAC DEMOLITION WORK TENTH FLOOR PLAN
MD-111-2	HVAC DEMOLITION WORK ELEVENTH FLOOR PLAN
MD-112-2	HVAC DEMOLITION WORK TWELFTH FLOOR PLAN
MD-113-2	HVAC DEMOLITION WORK THIRTEENTH FLOOR PLAN
MD-114-2	HVAC DEMOLITION WORK FOURTEENTH FLOOR PLAN
MD-115-2	HVAC DEMOLITION WORK FIFTEENTH FLOOR PLAN
MD-116-2	HVAC DEMOLITION WORK SIXTEENTH FLOOR PLAN
MD-117-2	HVAC DEMOLITION WORK SEVENTEENTH FLOOR PLAN
MD-118-2	HVAC DEMOLITION WORK EIGHTEENTH FLOOR PLAN
MPH-001	HVAC TEMPORARY WORK SPECIFICATIONS
MPH-100-2	HVAC TEMPORARY WORK BASEMENT PLAN
MPH-501-2	HVAC TEMPORARY WORK DETAILS
MPH-601-2	HVAC TEMPORARY WORK SCHEDULES & DIAGRAMS

PLUMBING

PD-001-2	PLUMBING DEMOLITION NOTES, ABBREVIATIONS & SYMBOLS
PD-099-2A	PLUMBING DEMOLITION SUB-BASEMENT DRAINAGE PLAN
PD-099-2B	PLUMBING DEMOLITION SUB-BASEMENT WATER PLAN
PD-100-2	PLUMBING DEMOLITION BASEMENT PLAN
PD-101-2	PLUMBING DEMOLITION FIRST FLOOR PLAN
PD-102-2	PLUMBING DEMOLITION SECOND FLOOR PLAN
PD-103-2	PLUMBING DEMOLITION THIRD FLOOR PLAN
PD-104-2	PLUMBING DEMOLITION FOURTH FLOOR PLAN
PD-105-2	PLUMBING DEMOLITION FIFTH FLOOR PLAN
PD-106-2	PLUMBING DEMOLITION SIXTH FLOOR PLAN
PD-107-2	PLUMBING DEMOLITION SEVENTH FLOOR PLAN
PD-108-2	PLUMBING DEMOLITION EIGHTH FLOOR PLAN
PD-109-2	PLUMBING DEMOLITION NINTH FLOOR PLAN
PD-110-2	PLUMBING DEMOLITION TENTH FLOOR PLAN
PD-111-2	PLUMBING DEMOLITION ELEVENTH FLOOR PLAN
PD-112-2	PLUMBING DEMOLITION TWELFTH FLOOR PLAN
PD-113-2	PLUMBING DEMOLITION THIRTEENTH FLOOR PLAN
PD-114-2	PLUMBING DEMOLITION FOURTEENTH FLOOR PLAN
PD-115-2	PLUMBING DEMOLITION FIFTEENTH FLOOR PLAN
PD-116-2	PLUMBING DEMOLITION SIXTEENTH FLOOR PLAN

FIRE PROTECTION

FPD-100-2	FIRE PROTECTION BASEMENT DEMOLITION PLAN
FPD-101-2	FIRE PROTECTION FIRST FLOOR DEMOLITION PLAN
FPD-102-2	FIRE PROTECTION SECOND FLOOR DEMOLITION PLAN
FPD-111-2	FIRE PROTECTION ELEVENTH FLOOR DEMOLITION PLAN
FPD-112-2	FIRE PROTECTION TWELFTH FLOOR DEMOLITION PLAN
FPD-113-2	FIRE PROTECTION THIRTEENTH FLOOR DEMOLITION PLAN
FPD-114-2	FIRE PROTECTION FOURTEENTH FLOOR DEMOLITION PLAN
FPD-115-2	FIRE PROTECTION FIFTEENTH FLOOR DEMOLITION PLAN
FPD-116-2	FIRE PROTECTION SIXTEENTH FLOOR DEMOLITION PLAN
FPD-117-2	FIRE PROTECTION EIGHTEENTH FLOOR DEMOLITION PLAN

ELECTRICAL

ED-001	ELECTRICAL DEMOLITION SYMBOL LIST, NOTES AND ABBREVIATIONS
ED-100-2	ELECTRICAL BASEMENT DEMOLITION PLAN
EPH-100-2	ELECTRICAL BASEMENT TEMPORARY WORK PLAN
ED-101-2	ELECTRICAL FIRST FLOOR DEMOLITION & TEMPORARY WORK PLAN
ED-102-2	ELECTRICAL SECOND FLOOR DEMOLITION & TEMPORARY WORK PLAN
ED-103-2	ELECTRICAL THIRD FLOOR DEMOLITION & TEMPORARY WORK PLAN
ED-104-2	ELECTRICAL FOURTH FLOOR DEMOLITION & TEMPORARY WORK PLAN
ED-105-2	ELECTRICAL FIFTH FLOOR DEMOLITION & TEMPORARY WORK PLAN
ED-106-2	ELECTRICAL SIXTH FLOOR DEMOLITION & TEMPORARY WORK PLAN
ED-107-2	ELECTRICAL SEVENTH FLOOR DEMOLITION & TEMPORARY WORK PLAN
ED-108-2	ELECTRICAL EIGHTH FLOOR DEMOLITION & TEMPORARY WORK PLAN
ED-109-2	ELECTRICAL NINTH FLOOR DEMOLITION & TEMPORARY WORK PLAN
ED-110-2	ELECTRICAL TENTH FLOOR DEMOLITION & TEMPORARY WORK PLAN
ED-111-2	ELECTRICAL ELEVENTH FLOOR DEMOLITION & TEMPORARY WORK PLAN
ED-112-2	ELECTRICAL TWELFTH FLOOR DEMOLITION & TEMPORARY WORK PLAN
ED-113-2	ELECTRICAL THIRTEENTH DEMOLITION & TEMPORARY WORK PLAN
ED-114-2	ELECTRICAL FOURTEENTH FLOOR DEMOLITION & TEMPORARY WORK PLAN
ED-115-2	ELECTRICAL FIFTEENTH FLOOR DEMOLITION & TEMPORARY WORK PLAN
ED-116-2	ELECTRICAL SIXTEENTH FLOOR DEMOLITION & TEMPORARY WORK PLAN
ED-300	ELECTRICAL TEMPORARY RISER DIAGRAM

FIRE ALARM

FAD-100-2	BASEMENT FIRE ALARM DEMOLITION PLAN

REFERENCE DRAWINGS (FROM 1997 DOCUMENTS)

P-4 FIRST FLOOR PLAN SIDE "B"
P-6 SECOND FLOOR PLAN SIDE "B"
P-28 SANITARY RISER DIAGRAM SIDE "A" & "B"

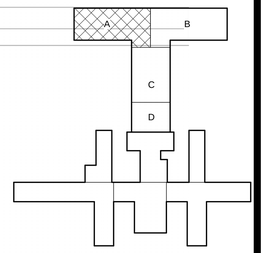

N
PROJECT NORTH

0 8' 16' 32'
SCALE:

NEW YORK STATE OF OPPORTUNITY. Office of General Services

DESIGN & CONSTRUCTION

CONSULTANTS:

RBSD ARCHITECTS P.C. | STV 100 Years

A Joint Venture
225 Park Avenue South
New York, New York 10003

WARNING:
THE ALTERATION OF THIS MATERIAL IN ANY WAY, UNLESS DONE UNDER THE DIRECTION OF A COMPARABLE PROFESSIONAL, I.E. ARCHITECT FOR AN ARCHITECT, ENGINEER FOR AN ENGINEER OR LANDSCAPE ARCHITECT FOR A LANDSCAPE ARCHITECT, IS A VIOLATION OF THE NEW YORK STATE EDUCATION LAW AND/OR REGULATIONS AND IS A CLASS 'A' MISDEMEANOR.

CONTRACT: CONSTRUCTION

TITLE: PHASE 1 WORK: DEMOLITION, ASBESTOS REMOVAL STRENGTHEN FLOOR SLABS & REPLACE WINDOWS

LOCATION: BUILDING No. 102 MANHATTAN FORENSIC RELOCATION 600 EAST 125TH STREET WARDS ISLAND, NY10035

CLIENT: NYS OFFICE OF MENTAL HEALTH

MARK	DATE	DESCRIPTION
13	6-17-2015	BULLETIN #12

PROJECT NUMBER: 44579
DESIGNED BY: MAK / WW
DRAWN BY: LR / LM / WW / JS / JM / DF / YB / YK
FIELD CHECK: LR / MA / DS / JM
APPROVED: WS / MAK / LF

SHEET TITLE: LIST OF DRAWING

BUILDING NUMBER: 106
DRAWING NUMBER: G-002
SHEET

6/23/2015 10:32:00 AM

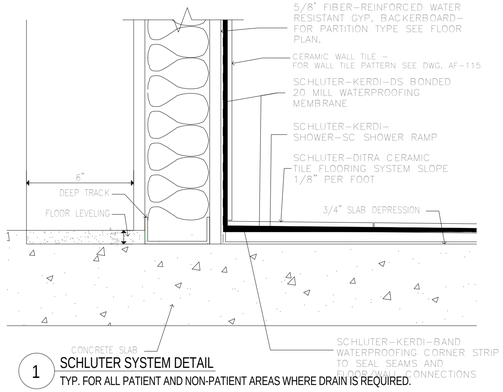

1 SCHLUTER SYSTEM DETAIL
TYP. FOR ALL PATIENT AND NON-PATIENT AREAS WHERE DRAIN IS REQUIRED.

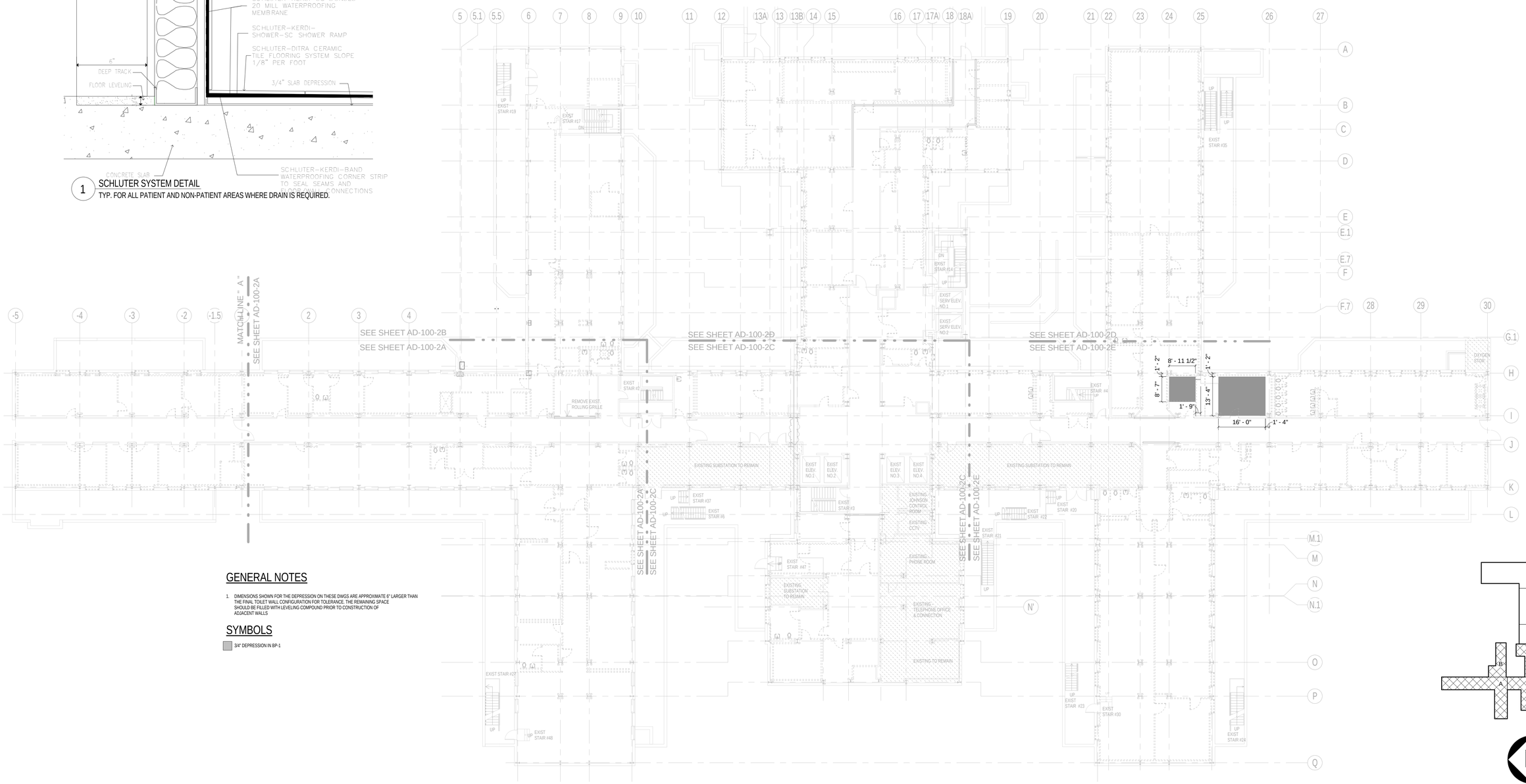

GENERAL NOTES

1. DIMENSIONS SHOWN FOR THE DEPRESSION ON THESE DWGS ARE APPROXIMATE 6" LARGER THAN THE FINAL TOILET WALL CONFIGURATION FOR TOLERANCE. THE REMAINING SPACE SHOULD BE FILLED WITH LEVELING COMPOUND PRIOR TO CONSTRUCTION OF ADJACENT WALLS

SYMBOLS

3/4" DEPRESSION IN BP-1

0 8' 16' 32'
SCALE: As indicated

NEW YORK STATE OF OPPORTUNITY. Office of General Services

DESIGN & CONSTRUCTION

CONSULTANTS:

RBSD ARCHITECTS P.C. | STV 100 Years

A Joint Venture

225 Park Avenue South
New York, New York 10003

WARNING:
THE ALTERATION OF THIS MATERIAL IN ANY WAY, UNLESS DONE UNDER THE DIRECTION OF A COMPARABLE PROFESSIONAL, I.E. ARCHITECT FOR AN ARCHITECT, ENGINEER FOR AN ENGINEER OR LANDSCAPE ARCHITECT FOR A LANDSCAPE ARCHITECT, IS A VIOLATION OF THE NEW YORK STATE EDUCATION LAW AND/OR REGULATIONS AND IS A CLASS 'A' MISDEMEANOR.

CONTRACT: CONSTRUCTION

TITLE: PHASE 1 WORK: DEMOLITION, ASBESTOS REMOVAL STRENGTHEN FLOOR SLABS & REPLACE WINDOWS

LOCATION: BUILDING No. 102 MANHATTAN FORENSIC RELOCATION 600 EAST 125TH STREET WARDS ISLAND, NY10035

CLIENT: NYS OFFICE OF MENTAL HEALTH

MARK	DATE	DESCRIPTION
1	6-17-2015	BULLETIN #12

PROJECT NUMBER: 44579
DESIGNED BY: MAK / WW
DRAWN BY: LR / LM / WW / JS / JM / DF / YB / YK
FIELD CHECK: LR / MA / DS / JM
APPROVED: WS / MAK / LF

SHEET TITLE:
BASEMENT FLOOR SCHLUTER SYSTEM DEPRESSION PLAN

BUILDING NUMBER: 102
DRAWING NUMBER: AD-300-2
SHEET

6/23/2015 10:34:18 AM

1 SCHLUTER SYSTEM DETAIL

TYP. FOR ALL PATIENT AND NON-PATIENT AREAS WHERE DRAIN IS REQUIRED.

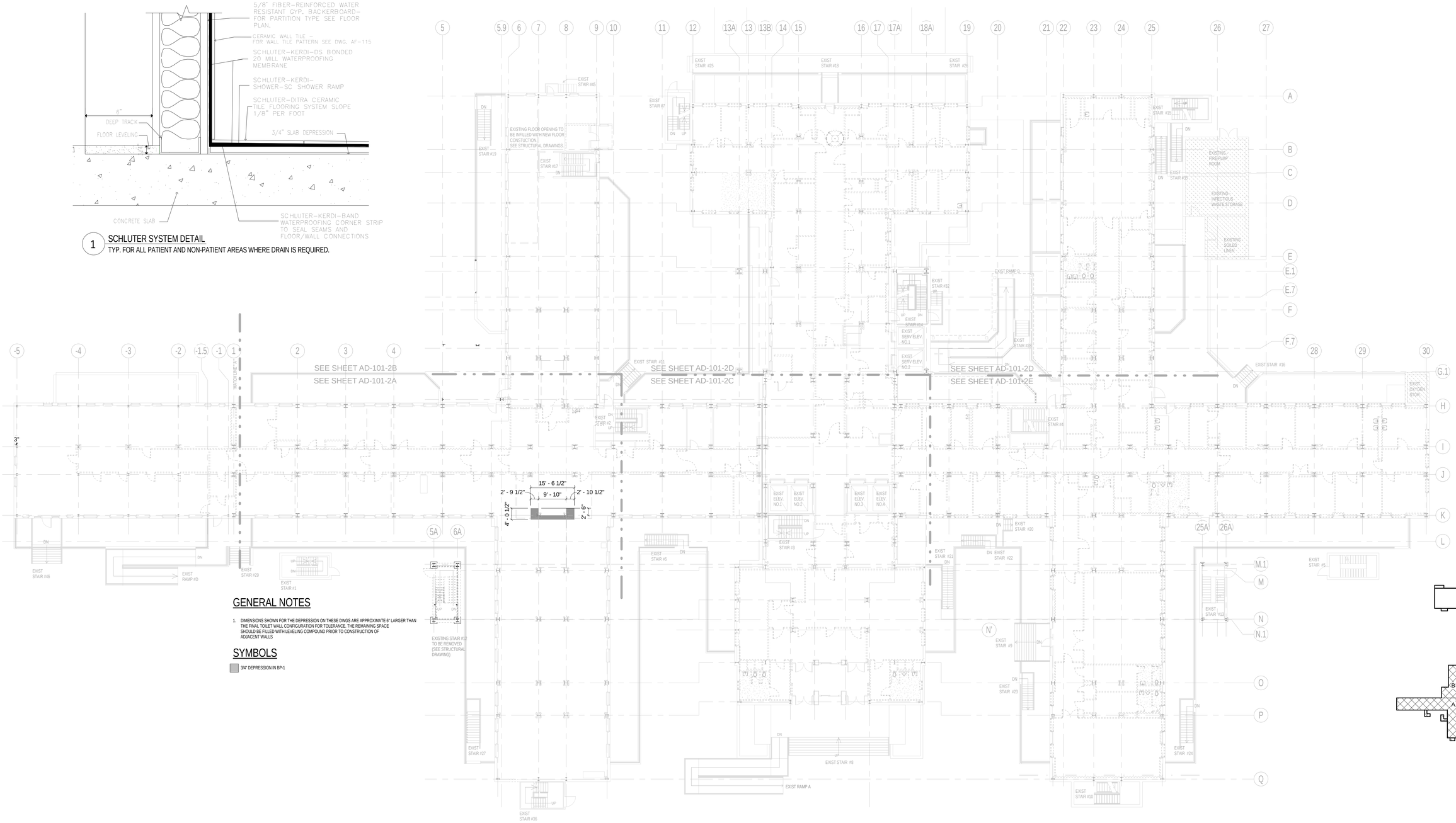

GENERAL NOTES

1. DIMENSIONS SHOWN FOR THE DEPRESSION ON THESE DWGS ARE APPROXIMATE 6" LARGER THAN THE FINAL TOILET WALL CONFIGURATION FOR TOLERANCE. THE REMAINING SPACE SHOULD BE FILLED WITH LEVELING COMPOUND PRIOR TO CONSTRUCTION OF ADJACENT WALLS

SYMBOLS

3/4" DEPRESSION IN BP-1

NEW YORK STATE OF OPPORTUNITY. | Office of General Services

DESIGN & CONSTRUCTION

CONSULTANTS:

RBSD ARCHITECTS P.C. | STV 100 Years

A Joint Venture

225 Park Avenue South
New York, New York 10003

WARNING:

THE ALTERATION OF THIS MATERIAL IN ANY WAY, UNLESS DONE UNDER THE DIRECTION OF A COMPARABLE PROFESSIONAL, I.E. ARCHITECT FOR AN ARCHITECT, ENGINEER FOR AN ENGINEER OR LANDSCAPE ARCHITECT FOR A LANDSCAPE ARCHITECT, IS A VIOLATION OF THE NEW YORK STATE EDUCATION LAW AND/OR REGULATIONS AND IS A CLASS 'A' MISDEMEANOR.

CONTRACT: CONSTRUCTION

TITLE: PHASE 1 WORK: DEMOLITION, ASBESTOS REMOVAL STRENGTHEN FLOOR SLABS & REPLACE WINDOWS

LOCATION: BUILDING No. 102 MANHATTAN FORENSIC RELOCATION 600 EAST 125TH STREET WARDS ISLAND, NY10035

CLIENT: NYS OFFICE OF MENTAL HEALTH

MARK	DATE	DESCRIPTION
B	6-17-2015	BULLETIN #12

PROJECT NUMBER:	44579
DESIGNED BY:	MAK / WW
DRAWN BY:	LR / LM / WW / JS / JM / DF / YB / YK
FIELD CHECK:	LR / MA / DS / JM
APPROVED:	WS / MAK / LF

SHEET TITLE:

FIRST FLOOR SCHLUTER SYSTEM DEPRESSION PLAN

BUILDING NUMBER: 102

DRAWING NUMBER: AD-301-2

SHEET

6/23/2015 10:34:31 AM

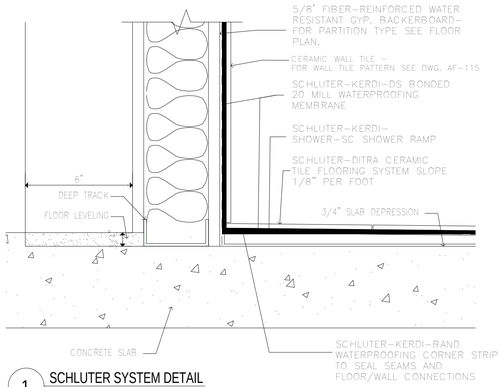

1 SCHLUTER SYSTEM DETAIL

TYP. FOR ALL PATIENT AND NON-PATIENT AREAS WHERE DRAIN IS REQUIRED.

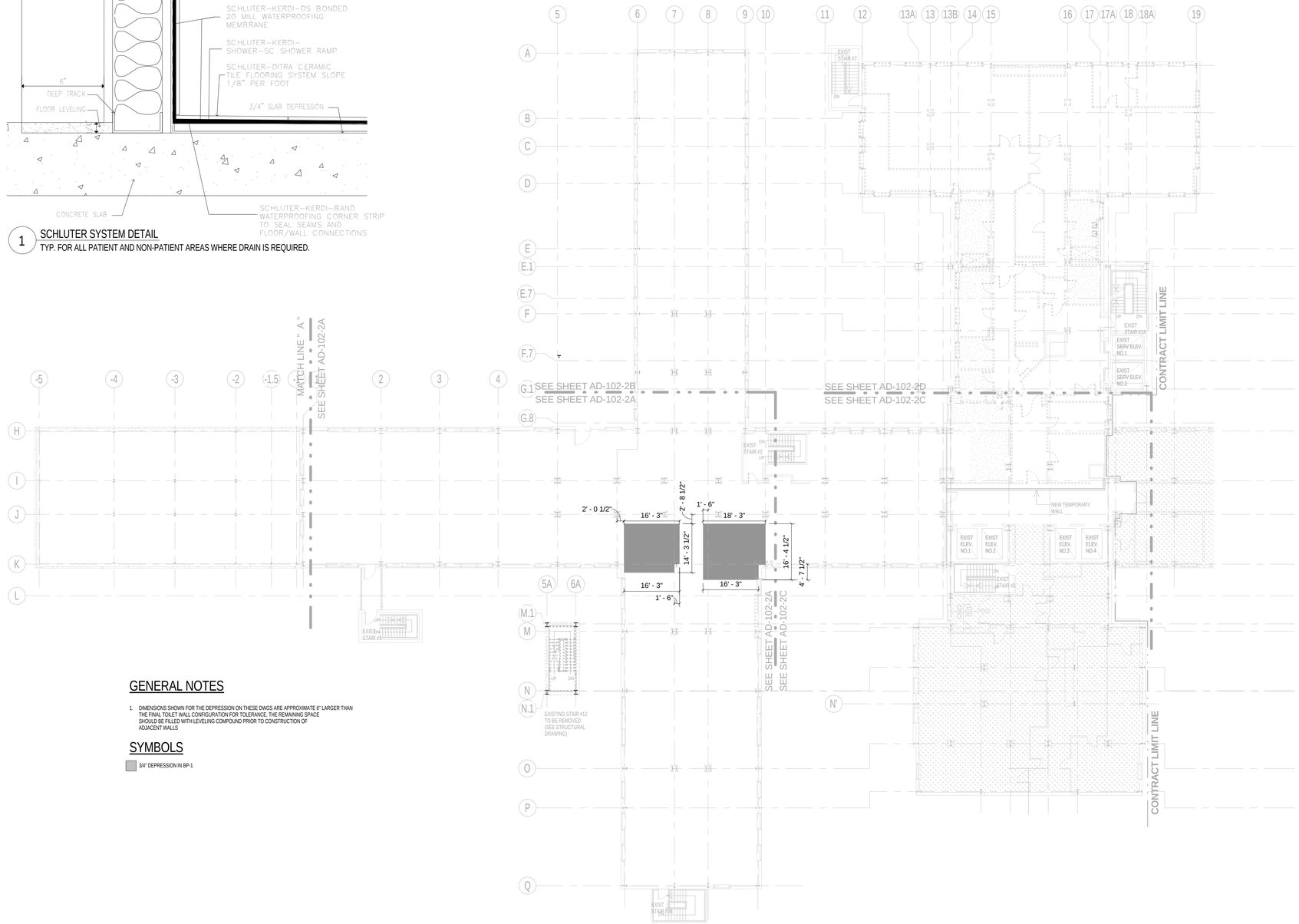

GENERAL NOTES

1. DIMENSIONS SHOWN FOR THE DEPRESSION ON THESE DWGS ARE APPROXIMATE 6" LARGER THAN THE FINAL TOILET WALL CONFIGURATION FOR TOLERANCE. THE REMAINING SPACE SHOULD BE FILLED WITH LEVELING COMPOUND PRIOR TO CONSTRUCTION OF ADJACENT WALLS

SYMBOLS

3/4" DEPRESSION IN BP-1

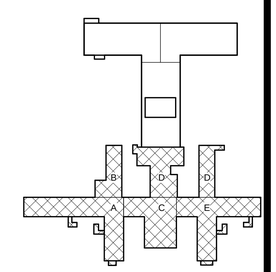

PROJECT NORTH

0 8' 16' 32'

SCALE: As indicated

NEW YORK STATE OF OPPORTUNITY. | Office of General Services

DESIGN & CONSTRUCTION

CONSULTANTS:

RBSD ARCHITECTS P.C. | STV 100 Years

A Joint Venture

225 Park Avenue South
New York, New York 10003

WARNING:

THE ALTERATION OF THIS MATERIAL IN ANY WAY, UNLESS DONE UNDER THE DIRECTION OF A COMPARABLE PROFESSIONAL, I.E. ARCHITECT FOR AN ARCHITECT, ENGINEER FOR AN ENGINEER OR LANDSCAPE ARCHITECT FOR A LANDSCAPE ARCHITECT, IS A VIOLATION OF THE NEW YORK STATE EDUCATION LAW AND/OR REGULATIONS AND IS A CLASS 'A' MISDEMEANOR.

CONTRACT: CONSTRUCTION

TITLE: PHASE 1 WORK: DEMOLITION, ASBESTOS REMOVAL STRENGTHEN FLOOR SLABS & REPLACE WINDOWS

LOCATION: BUILDING No. 102 MANHATTAN FORENSIC RELOCATION 600 EAST 125TH STREET WARDS ISLAND, NY10035

CLIENT: NYS OFFICE OF MENTAL HEALTH

MARK	DATE	DESCRIPTION
13	6-17-2015	BULLETIN #12

PROJECT NUMBER: 44579

DESIGNED BY: MAK / WW

DRAWN BY: LR / LM / WW / JS / JM / DF / YB / YK

FIELD CHECK: LR / MA / DS / JM

APPROVED: WS / MAK / LF

SHEET TITLE:

SECOND FLOOR SCHLUTER SYSTEM DEPRESSION PLAN

BUILDING NUMBER: 102

DRAWING NUMBER: AD-302-2

SHEET

6/23/2015 10:34:35 AM

1 SCHLUTER SYSTEM DETAIL

TYP. FOR ALL PATIENT AND NON-PATIENT AREAS WHERE DRAIN IS REQUIRED.

GENERAL NOTES

1. DIMENSIONS SHOWN FOR THE DEPRESSION ON THESE DWGS ARE APPROXIMATE 6" LARGER THAN THE FINAL TOILET WALL CONFIGURATION FOR TOLERANCE. THE REMAINING SPACE SHOULD BE FILLED WITH LEVELING COMPOUND PRIOR TO CONSTRUCTION OF ADJACENT WALLS

SYMBOLS

3/4" DEPRESSION IN BP-1

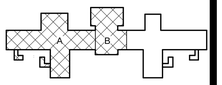

PROJECT NORTH

0 4' 8' 16'

SCALE: As indicated

NEW YORK STATE OF OPPORTUNITY. Office of General Services

DESIGN & CONSTRUCTION

CONSULTANTS:

RBSD ARCHITECTS P.C. | STV 100 Years

A Joint Venture

225 Park Avenue South
New York, New York 10003

WARNING:

THE ALTERATION OF THIS MATERIAL IN ANY WAY, UNLESS DONE UNDER THE DIRECTION OF A COMPARABLE PROFESSIONAL, I.E. ARCHITECT FOR AN ARCHITECT, ENGINEER FOR AN ENGINEER OR LANDSCAPE ARCHITECT FOR A LANDSCAPE ARCHITECT, IS A VIOLATION OF THE NEW YORK STATE EDUCATION LAW AND/OR REGULATIONS AND IS A CLASS 'A' MISDEMEANOR.

CONTRACT: CONSTRUCTION

TITLE: PHASE 1 WORK: DEMOLITION, ASBESTOS REMOVAL STRENGTHEN FLOOR SLABS & REPLACE WINDOWS

LOCATION: BUILDING No. 102 MANHATTAN FORENSIC RELOCATION 600 EAST 125TH STREET WARDS ISLAND, NY10035

CLIENT: NYS OFFICE OF MENTAL HEALTH

MARK	DATE	DESCRIPTION
1	6-17-2015	BULLETIN #12

PROJECT NUMBER: 44579

DESIGNED BY: MAK / WW

DRAWN BY: LR / LM / WW / JS / JM / DF / YB / YK

FIELD CHECK: LR / MA / DS / JM

APPROVED: WS / MAK / LF

SHEET TITLE:

THIRD TO FIFTH FLOOR SCHLUTER SYSTEM DEPRESSION PLAN

BUILDING NUMBER: 102

DRAWING NUMBER: AD-303-2

SHEET

6/23/2015 10:34:41 AM

1 SCHLUTER SYSTEM DETAIL

TYP. FOR ALL PATIENT AND NON-PATIENT AREAS WHERE DRAIN IS REQUIRED.

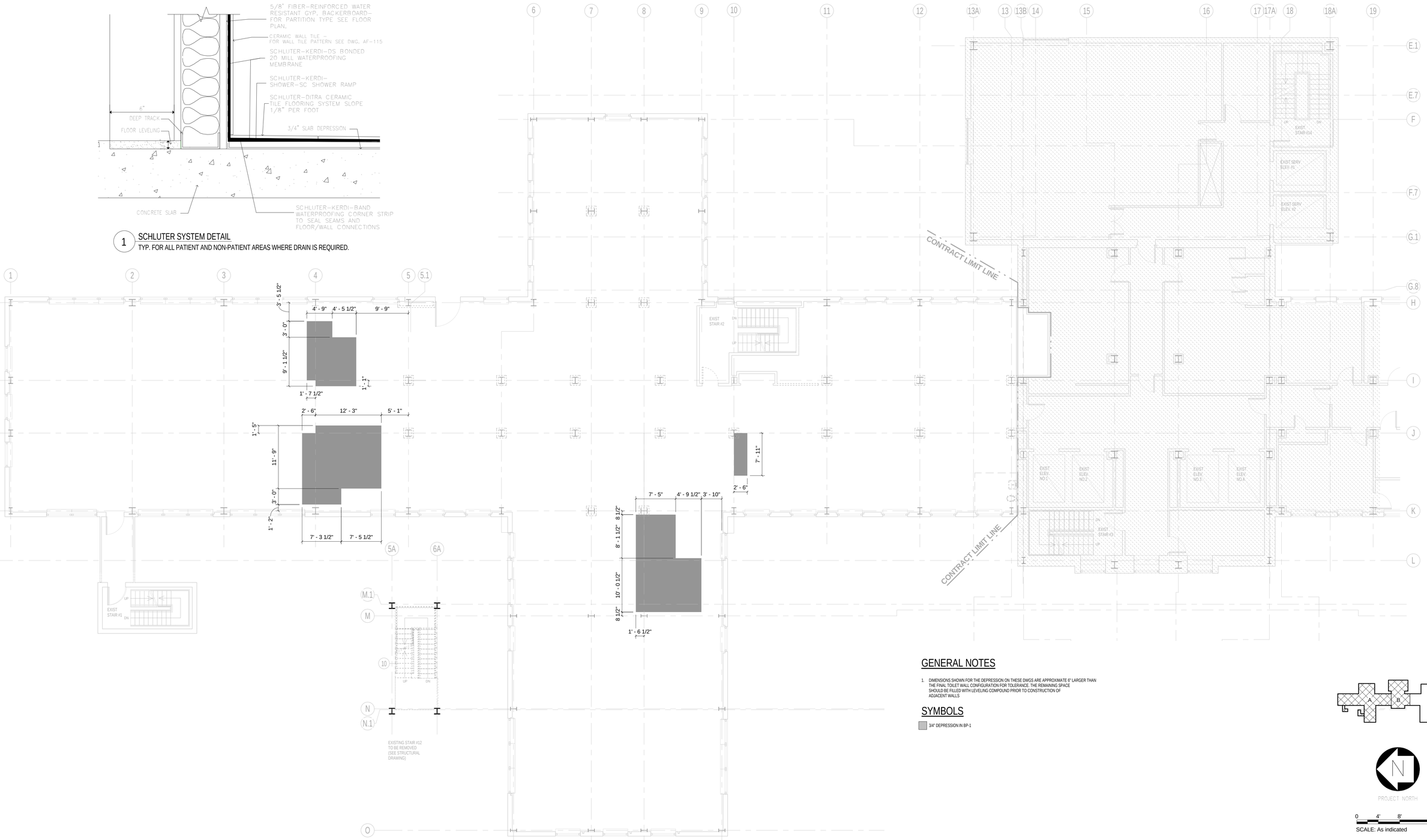

GENERAL NOTES

1. DIMENSIONS SHOWN FOR THE DEPRESSION ON THESE DWGS ARE APPROXIMATE 6" LARGER THAN THE FINAL TOILET WALL CONFIGURATION FOR TOLERANCE. THE REMAINING SPACE SHOULD BE FILLED WITH LEVELING COMPOUND PRIOR TO CONSTRUCTION OF ADJACENT WALLS

SYMBOLS

3/4" DEPRESSION IN BP-1

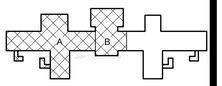

PROJECT NORTH

0 4' 8' 16'

SCALE: As indicated

NEW YORK STATE OF OPPORTUNITY. | Office of General Services

DESIGN & CONSTRUCTION

CONSULTANTS:

RBSD ARCHITECTS P.C. | STV 100 Years

A Joint Venture

225 Park Avenue South
New York, New York 10003

WARNING:
THE ALTERATION OF THIS MATERIAL IN ANY WAY, UNLESS DONE UNDER THE DIRECTION OF A COMPARABLE PROFESSIONAL, I.E. ARCHITECT FOR AN ARCHITECT, ENGINEER FOR AN ENGINEER OR LANDSCAPE ARCHITECT FOR A LANDSCAPE ARCHITECT, IS A VIOLATION OF THE NEW YORK STATE EDUCATION LAW AND/OR REGULATIONS AND IS A CLASS 'A' MISDEMEANOR.

CONTRACT: CONSTRUCTION

TITLE: PHASE 1 WORK: DEMOLITION, ASBESTOS REMOVAL STRENGTHEN FLOOR SLABS & REPLACE WINDOWS

LOCATION: BUILDING No. 102 MANHATTAN FORENSIC RELOCATION 600 EAST 125TH STREET WARDS ISLAND, NY10035

CLIENT: NYS OFFICE OF MENTAL HEALTH

MARK	DATE	DESCRIPTION
1	6-17-2015	BULLETIN #12

PROJECT NUMBER: 44579

DESIGNED BY: MAK / WW

DRAWN BY: LR / LM / WW / JS / JM / DF / YB / YK

FIELD CHECK: LR / MA / DS / JM

APPROVED: WS / MAK / LF

SHEET TITLE:

SIXTH TO ELEVENTH FLOOR SCHLUTER SYSTEM DEPRESSION PLAN

BUILDING NUMBER: 102

DRAWING NUMBER: AD-304-2

SHEET

6/23/2015 10:34:44 AM

1 SCHLUTER SYSTEM DETAIL

TYP. FOR ALL PATIENT AND NON-PATIENT AREAS WHERE DRAIN IS REQUIRED.

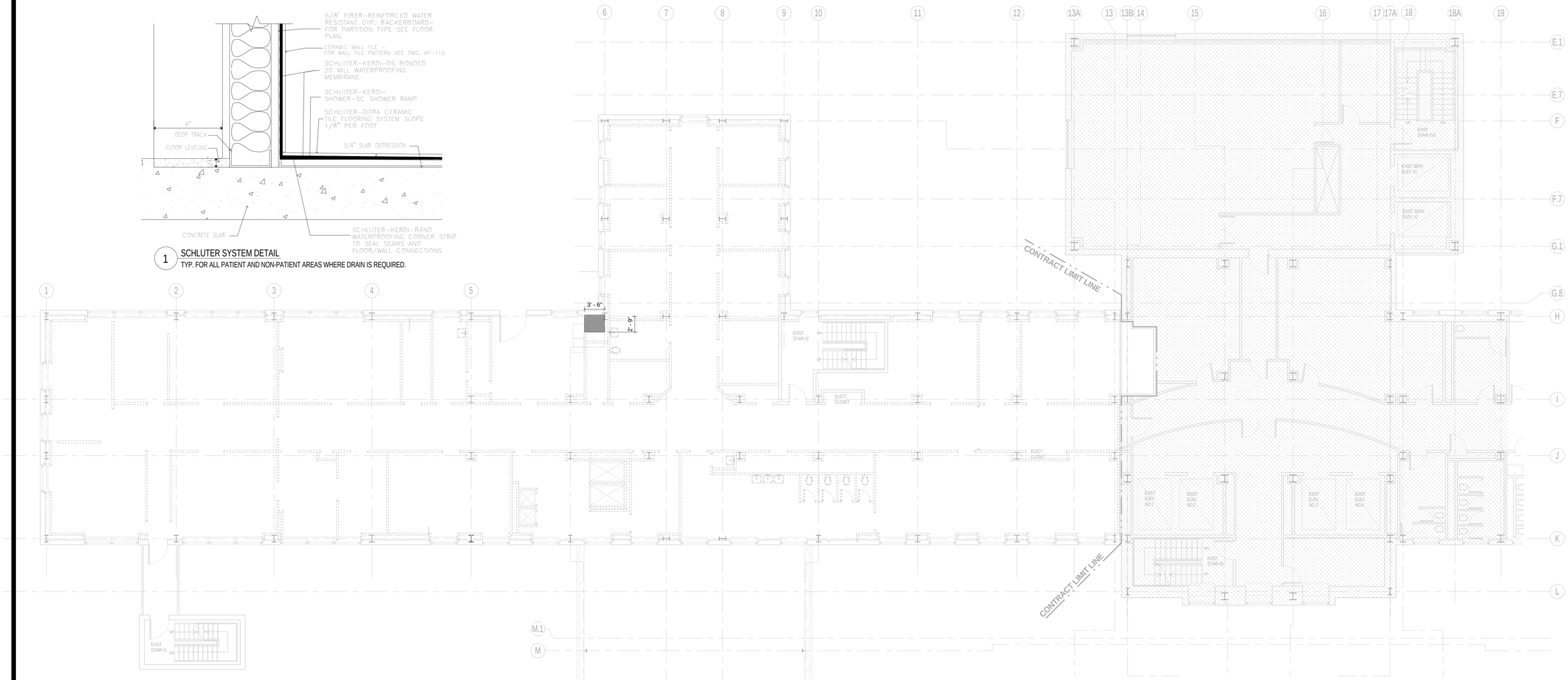

GENERAL NOTES

1. DIMENSIONS SHOWN FOR THE DEPRESSION ON THESE DWGS ARE APPROXIMATE 6" LARGER THAN THE FINAL TOILET WALL CONFIGURATION FOR TOLERANCE. THE REMAINING SPACE SHOULD BE FILLED WITH LEVELING COMPOUND PRIOR TO CONSTRUCTION OF ADJACENT WALLS

SYMBOLS

3/4" DEPRESSION IN BP-1

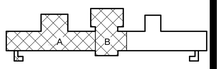

PROJECT NORTH

0 4' 8' 16'

SCALE: As indicated

NEW YORK STATE OF OPPORTUNITY. Office of General Services

DESIGN & CONSTRUCTION

CONSULTANTS:

RBSD ARCHITECTS P.C. | STV 100 Years

A Joint Venture

225 Park Avenue South
New York, New York 10003

WARNING:

THE ALTERATION OF THIS MATERIAL IN ANY WAY, UNLESS DONE UNDER THE DIRECTION OF A COMPARABLE PROFESSIONAL, I.E. ARCHITECT FOR AN ARCHITECT, ENGINEER FOR AN ENGINEER OR LANDSCAPE ARCHITECT FOR A LANDSCAPE ARCHITECT, IS A VIOLATION OF THE NEW YORK STATE EDUCATION LAW AND/OR REGULATIONS AND IS A CLASS 'A' MISDEMEANOR.

CONTRACT: CONSTRUCTION

TITLE: PHASE 1 WORK: DEMOLITION, ASBESTOS REMOVAL STRENGTHEN FLOOR SLABS & REPLACE WINDOWS

LOCATION: BUILDING No. 102 MANHATTAN FORENSIC RELOCATION 600 EAST 125TH STREET WARDS ISLAND, NY10035

CLIENT: NYS OFFICE OF MENTAL HEALTH

MARK	DATE	DESCRIPTION
A	6-17-2015	BULLETIN #12

PROJECT NUMBER: 44579

DESIGNED BY: MAK / WW

DRAWN BY: LR / LM / WW / JS / JM / DF / YB / YK

FIELD CHECK: LR / MA / DS / JM

APPROVED: WS / MAK / LF

SHEET TITLE:

TWELFTH TO FOURTEENTH FLOOR SCHLUTER SYSTEM DEPRESSION PLAN

BUILDING NUMBER: 102

DRAWING NUMBER: AD-305-2

SHEET

6/23/2015 10:34:49 AM

NYS Office of General Services
Serving New York

Design and Construction
AN ISO 9001:2008 CERTIFIED ORGANIZATION
Division of Construction, 34th Floor, Corning Tower
The Governor Nelson A. Rockefeller Empire State Plaza
Albany, New York 12242
Phone: (518) 474-0331 FAX: (518) 474-8201

INFORMATION BULLETIN

Project No.: 44579

Project Description: *(Project Title, Facility Name and Address)*	Client Agency:
44579 - Manhattan PC - Bid Package 1: Demolition, Asbestos RemovalStrengthen New York, NY	OMH

IB No.:	Trades:	Spec. Section:	Drawing No.:
IB 12	Contractor IB (Final)	Contractor IB (Final)	Strustural Drawings S-100-

Brief Description:
Several areas of the new floor slab construction require ¾" deep slab depressions to receive the new Schluter system in toilet room floors to be installed in the next bid package. The attached structural plans show approximate locations of the depressed

Issue Date:	Issued By:	Affiliation:
6/23/2015	Larry Fink	RBSD Architects

Reason:
☐ Program Changer ☒ Omission ☐ Design Error ☐ Contractor Error ☐ Field Error ☐ Field Condition ☐ Document Clarification
☐ Material / Methods Substitution

Detailed Scope Description (include contract adds and deducts):
See Detailed Descriptiom PDF below

Justification for OSC:
This work was originally intended to be done in BP-2 but in these specific areas it is more cost effective to hav the depressions accomplished as part of the BP-1 only in the areas where slabs are being strengthened or replaced

Estimated Cost Impact:	Estimated Time Impact:
☒ Additional Cost ☐ No Change ☐ Credit	☐ YES ☐ NO

Attached Document Description:
See Attached PDFBelow

<u>Bulletin No. 12 6/23/2015)</u>

Description of work:

Several areas of the new floor slab construction require ¾" deep slab depressions to receive the new Schluter system in toilet room floors to be installed in the next bid package. The attached structural plans show approximate locations of the depressed slab areas. The final locations of the slab depressions shall be coordinated with architectural drawings also attached to provide dimensions and locations of the depressions for both Bid Package 1 and Bid Package 2. The work covered in the scope of this IB 12 is limited to only the areas that are within the current BP-1 Contract.

There is no change to the placement of the Structural Steel supplementary beams already approved or the placement of metal deck. This bulletin only addresses the ¾ inch depression in the top of concrete in the areas identified.

Summary of changes:

Structural Drawings all dated 6-17-2015

<u>S-100-2</u>

- Two areas of ¾" deep slab depressions have been added between column lines H and I, and column lines 24 and 26.
- A typical slab depression detail has been added.

<u>S-101-2</u>

- One small "U" Shaped area of ¾" Depression has been added along column line K from 2'-91/2" to the North of line 7 to 2'-10 to the south of line 8.
- A typical slab depression detail

<u>S-102-2</u>

- Two areas of ¾" deep slab depressions have been added between column lines J and M, and column lines 6 and 10.
- A typical slab depression detail

<u>S-103-2</u>

- Two areas of ¾" deep slab depressions have been added between column lines H and K, and column lines 4 and 5.
- Two areas of ¾" deep slab depressions have been added between column lines J and M, and column lines 8 and 11.
- A typical slab depression detail has been added.

<u>S-104-2</u>

- Two areas of ¾" deep slab depressions have been added between column lines H and K, and column lines 4 and 5.
- Two areas of ¾" deep slab depressions have been added between column lines J and M, and column lines 8 and 11.

- A typical slab depression detail has been added.

S-105-2

- Two areas of ¾" deep slab depressions have been added between column lines H and K, and column lines 4 and 5.
- Two areas of ¾" deep slab depressions have been added between column lines J and M, and column lines 8 and 11.
- A typical slab depression detail has been added.

S-106-2

- Two areas of ¾" deep slab depressions have been added between column lines H and K, and column lines 4 and 5.
- Two areas of ¾" deep slab depressions have been added between column lines J and M, and column lines 8 and 11.
- A typical slab depression detail has been added.

S-107-2

- One area of ¾" deep slab depression has been added near column lines H and 6.
- A typical slab depression detail has been added.

S-108-2

- One area of ¾" deep slab depression has been added near column lines H and 6 at the 13th and 14th floor levels.
- A typical slab depression detail has been added

Architectural Drawings issued for reference: All Dated 6-17-2015
The following drawings are issued in this bulletin to show the locations of depressed Areas for this Contract and the future BP-2 Project. These drawings identify the areas covered under this bulletin in Gray H shade. The areas that will be addressed in a future BP-2 Contract are indicated in a diagonal hatch.

G-002-2 List of Drawings with supplemental New AD dwgs added

AD-300-2 Basement Floor

AD-301-2 1st Floor

AD-302-2 2nd Floor

AD-303-2 3 – 5th Floors

AD-304-2 6– 11th Floors

AD-305-2 12– 14th Floor

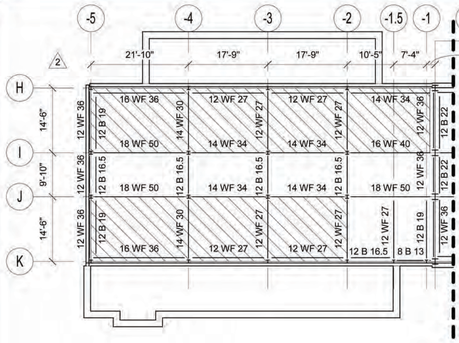

BASEMENT FLOOR LEGEND

- EXISTING FLOOR CONSTRUCTION TO REMAIN (SEE DEMOLITION PLANS FOR AREAS OF NEW NONSTRUCTURAL L.W. CONCRETE TOPPING AT PREVIOUSLY REMOVED CERAMIC AND QUARRY TILE)
- EXISTING 4" CONCRETE FILL REMOVED AS SHOWN ON DEMOLITION DWG. SD-100-2 TO BE REPLACED WITH 4" (U.O.N.) LIGHT WEIGHT CONCRETE COMPOSITE TOPPING (SEE DETAIL 5/S-301-2), EXISTING CINDER FILLER BLOCKS AND CONC. JOISTS BELOW TO REMAIN
- EXISTING FLOOR OPENING TO BE INFILLED WITH NEW FLOOR CONSTRUCTION (SEE DETAIL 1/S-301-2), U.O.N.
- 16 WF 36 — DENOTES EXISTING FLOOR BEAM TO REMAIN
- ★ W12x26 — ★ DENOTES NEW FLOOR BEAM SEE DETAIL 4/S-301-2
- (WT-X) — DENOTES NEW WELDED WT REINFORCING MEMBER, SEE DETAIL 1/S-303-2
- NEW FLOOR OPENING (U.O.N.)
- DENOTES NEW DEPRESSED SLAB AREA (REFER TO ARCHITECTURAL DRAWINGS, AS-100 SERIES, FOR EXACT LOCATIONS AND SIZE)

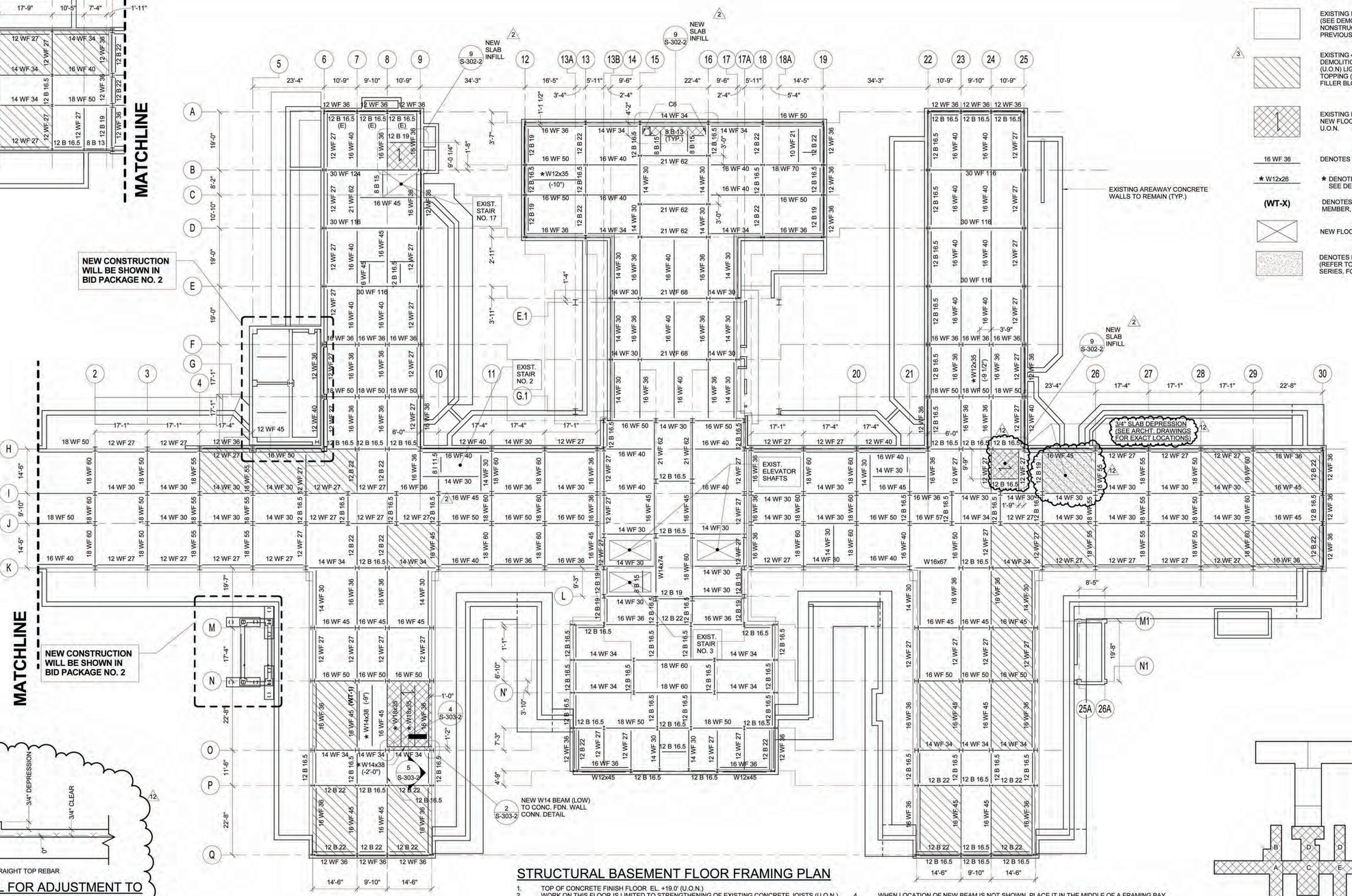

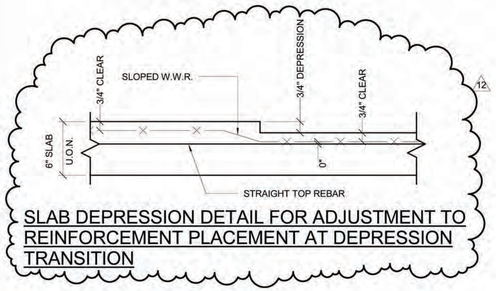

SLAB DEPRESSION DETAIL FOR ADJUSTMENT TO REINFORCEMENT PLACEMENT AT DEPRESSION TRANSITION

STRUCTURAL BASEMENT FLOOR FRAMING PLAN

1. TOP OF CONCRETE FINISH FLOOR EL. +19.0' (U.O.N.)
2. WORK ON THIS FLOOR IS LIMITED TO STRENGTHENING OF EXISTING CONCRETE JOISTS (U.O.N.). THE AREA OF WORK IS SHOWN ON THIS DRAWING AS A HATCHED AREA, SEE SHEET LEGEND. FOR EXISTING FLOOR CONSTRUCTION IN THE AREA OF STRENGTHENING, SEE CONDITION #1 ON DETAIL 1/SD-001, AND DETAIL 2/SD-001.
3. REFER TO DETAIL 6/S-302-2 FOR NEW COMPOSITE CONCRETE FLOOR TOPPING.
4. WHEN LOCATION OF NEW BEAM IS NOT SHOWN, PLACE IT IN THE MIDDLE OF A FRAMING BAY (BASED ON CENTERLINE OF COLUMNS), OR EQUAL SPACING.
5. TOP OF EXISTING STEEL ELEVATION 6" BELOW FINISH FLOOR ELEVATION, U.O.N.
6. SYMBOL (-11") INDICATES TOP OF NEW STEEL BEAM DISTANCE WITH REFERENCE TO FINISH FLOOR ELEVATION.
7. ALL EXISTING STEEL BEAMS ARE ENCASED IN CONCRETE. FOR NEW BEAM CONNECTION TO EXIST. BEAM, ENCASEMENT SHALL BE REMOVED LOCALLY AND PATCHED AFTER INSTALLATION.

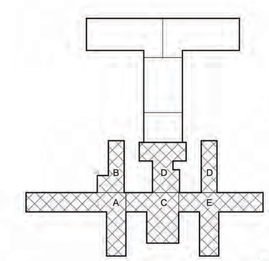

PROJECT NORTH

SCALE: 1/16" = 1'-0"

REFERENCE ONLY FROM BID PACKAGE 1

NYS OFFICE OF GENERAL SERVICES

Serving New York

ANDREW M. CUOMO
Governor
ROANN M. DESTITO
Commissioner

CONSULTANTS:

RBSD ARCHITECTS P.C. | STV 100 Years

A Joint Venture
225 Park Avenue South
New York, New York 10003

WARNING:
THE ALTERATION OF THIS MATERIAL IN ANY WAY, UNLESS DONE UNDER THE DIRECTION OF A COMPARABLE PROFESSIONAL, I.E. ARCHITECT FOR AN ARCHITECT, ENGINEER FOR AN ENGINEER OR LANDSCAPE ARCHITECT FOR A LANDSCAPE ARCHITECT, IS A VIOLATION OF THE NEW YORK STATE EDUCATION LAW AND/OR REGULATIONS AND IS A CLASS 'A' MISDEMEANOR.

CONTRACT: CONSTRUCTION

TITLE: PHASE 1 WORK: DEMOLITION, ASBESTOS REMOVAL, STRENGTHEN FLOOR SLABS & REPLACE WINDOWS

LOCATION: MANHATTAN PSYCHIATRIC CENTER, BUILDING No. 102
600 EAST 125TH STREET WARDS ISLAND, NY 10035

CLIENT: NYS OFFICE OF MENTAL HEALTH

PROGRESS PRINT

MARK	DATE	DESCRIPTION
12	6-17-2015	BULLETIN NO. 12
3	7-17-2014	ADDENDUM NO. 3
2	6-30-2014	ADDENDUM NO. 2

PROJECT NUMBER:	44579
DESIGNED BY:	MR
DRAWN BY:	CJL
FIELD CHECK:	ACC/JM
APPROVED:	ACC

SHEET TITLE: STRUCTURAL BASEMENT FLOOR FRAMING PLAN

BUILDING NUMBER: 102

DRAWING NUMBER: S-100-2

SHEET

6/12/2015 4:57:18 PM

TYPICAL FLOOR LEGEND

DENOTES NEW DEPRESSED SLAB AREA (REFER TO ARCHITECTURAL DRAWINGS, AS-100 SERIES, FOR EXACT LOCATIONS AND SIZE)

DENOTES FUTURE FLOOR OPENING AT BOTTOM OF MECH. SHAFT, OPENING TO BE SAW CUT FOR **BID PACKAGE NO. 2** IN NEW FLOOR CONSTRUCTION (REFER TO TYPICAL DETAIL 6/S-301-2)

EXISTING FLOOR CONSTRUCTION TO REMAIN (SEE DEMOLITION PLANS FOR AREAS OF NEW NONSTRUCTURAL L.W. CONCRETE TOPPING AT PREVIOUSLY REMOVED CERAMIC AND QUARRY TILE)

EXISTING FLOOR SLAB TO BE REPLACED WITH NEW FLOOR CONSTRUCTION (SEE DETAIL 1/S-301-2), U.O.N.

AREA OF REMOVED CONCRETE FLOOR FILL TO BE INFILLED WITH NEW REINFORCED L.W. CONCRETE (SEE DETAIL 3/S-301-2)

16 WF 36 — DENOTES EXISTING FLOOR BEAM TO REMAIN

** 16 WF 36 [...] — DENOTES EXISTING FLOOR BEAM TO REMAIN AND BE REINFORCED WITH WELDED SHEAR STUDS (REFER TO TYPICAL FLOOR RECONSTRUCTION DETAILS)

★ W12x26 — ★ DENOTES NEW FLOOR BEAM UNDER SOLID CONC. SLAB OR CONC. JOISTS, SEE DETAILS 1 & 4/S-301-2, TOP OF STEEL ELEVATIONS IS 6" BELOW FINISH FLOOR ELEVATION, U.O.N.

DENOTES SPAN DIRECTION OF METAL DECK FOR NEW CONCRETE SLAB, SEE DETAIL 1/S-301-2

(WT-X) — DENOTES NEW WELDED WT REINFORCING MEMBER, SEE DETAIL 1/S-303-2

(CP-X) — DENOTES NEW WELDED REINFORCING COVER PLATE, SEE DETAIL 1/S-303-2

DENOTES OUTLINE OF FUTURE TYPICAL FLOOR OPENING TO BE SAW CUT FOR **BID PACKAGE NO. 2** IN NEW FLOOR CONSTRUCTION (REFER TO TYPICAL DETAIL 6/S-301-2)

NOTE: SEE DETAIL 1/S-301-2 FOR SUGGESTED SEQUENCE FOR NEW FLOOR CONSTRUCTION.

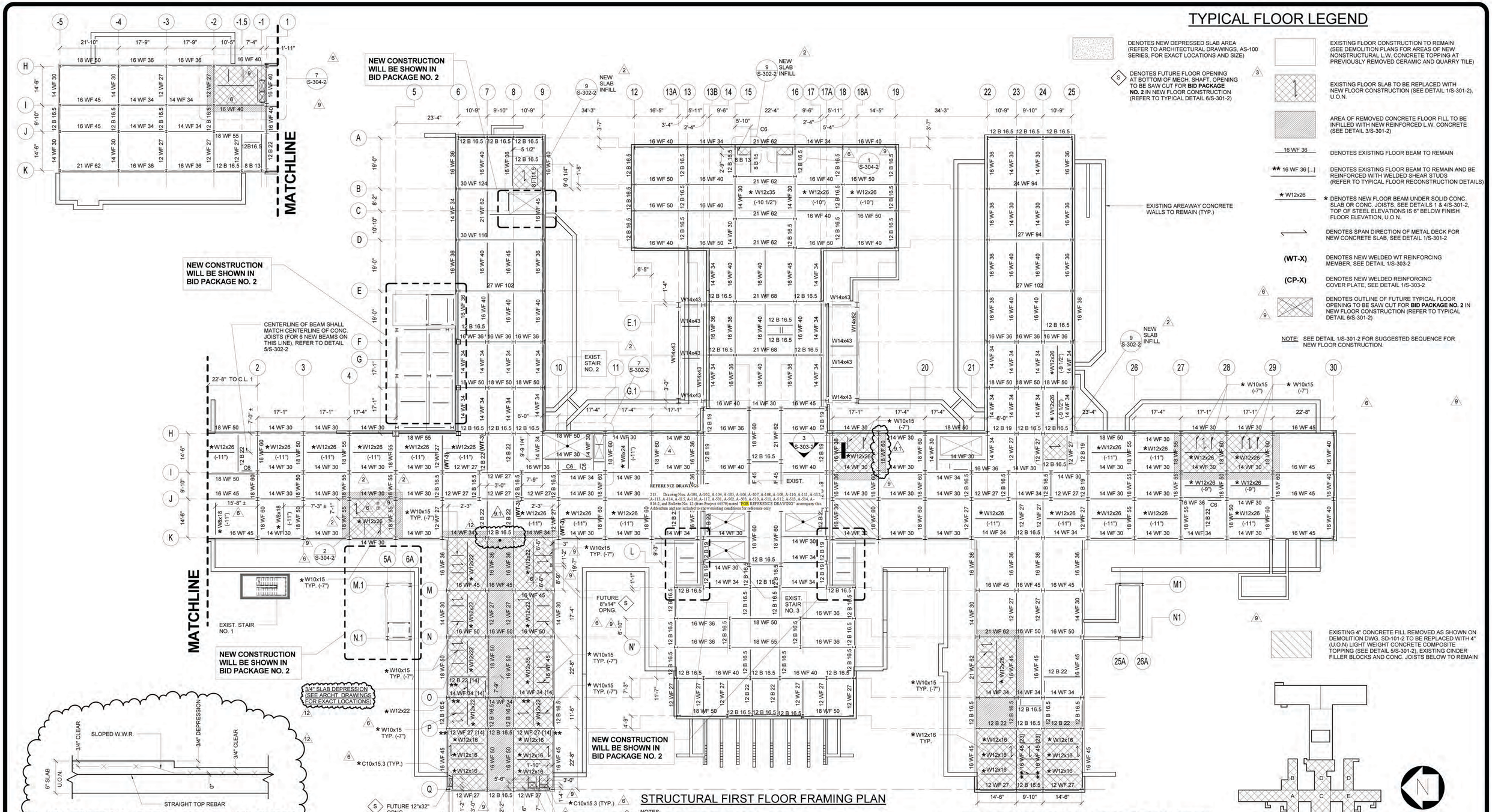

NYS OFFICE OF GENERAL SERVICES
Serving New York
ANDREW M. CUOMO
Governor
ROANN M. DESTITO
Commissioner

CONSULTANTS:
RBSD ARCHITECTS, P.C. | STV 100 Years
A Joint Venture
225 Park Avenue South
New York, New York 10003

WARNING:
THE ALTERATION OF THIS MATERIAL IN ANY WAY, UNLESS DONE UNDER THE DIRECTION OF A COMPARABLE PROFESSIONAL, I.E. ARCHITECT FOR AN ARCHITECT, ENGINEER FOR AN ENGINEER OR LANDSCAPE ARCHITECT FOR A LANDSCAPE ARCHITECT, IS A VIOLATION OF THE NEW YORK STATE EDUCATION LAW AND/OR REGULATIONS AND IS A CLASS 'A' MISDEMEANOR.

CONTRACT: CONSTRUCTION

TITLE: PHASE 1 WORK: DEMOLITION, ASBESTOS REMOVAL, STRENGTHEN FLOOR SLABS & REPLACE WINDOWS

LOCATION: MANHATTAN PSYCHIATRIC CENTER, BUILDING No. 102
600 EAST 125TH STREET WARDS ISLAND, NY 10035

CLIENT: NYS OFFICE OF MENTAL HEALTH

PROGRESS PRINT

MARK	DATE	DESCRIPTION
12	6-17-2015	BULLETIN NO. 12
9.1	4-29-2015	BULLETIN NO. 9.1
9	4-8-2015	BULLETIN NO. 9
6	3-9-2015	BULLETIN NO. 6
4	2-13-2015	BULLETIN NO. 4
3	7-17-2014	ADDENDUM NO. 3
2	6-30-2014	ADDENDUM NO. 2

PROJECT NUMBER:	44579
DESIGNED BY:	MR
DRAWN BY:	CJL
FIELD CHECK:	ACC/JM
APPROVED:	ACC

SHEET TITLE: STRUCTURAL FIRST FLOOR FRAMING PLAN

BUILDING NUMBER: 102

DRAWING NUMBER: S-101-2

SHEET

6/23/2015 9:54:32 AM

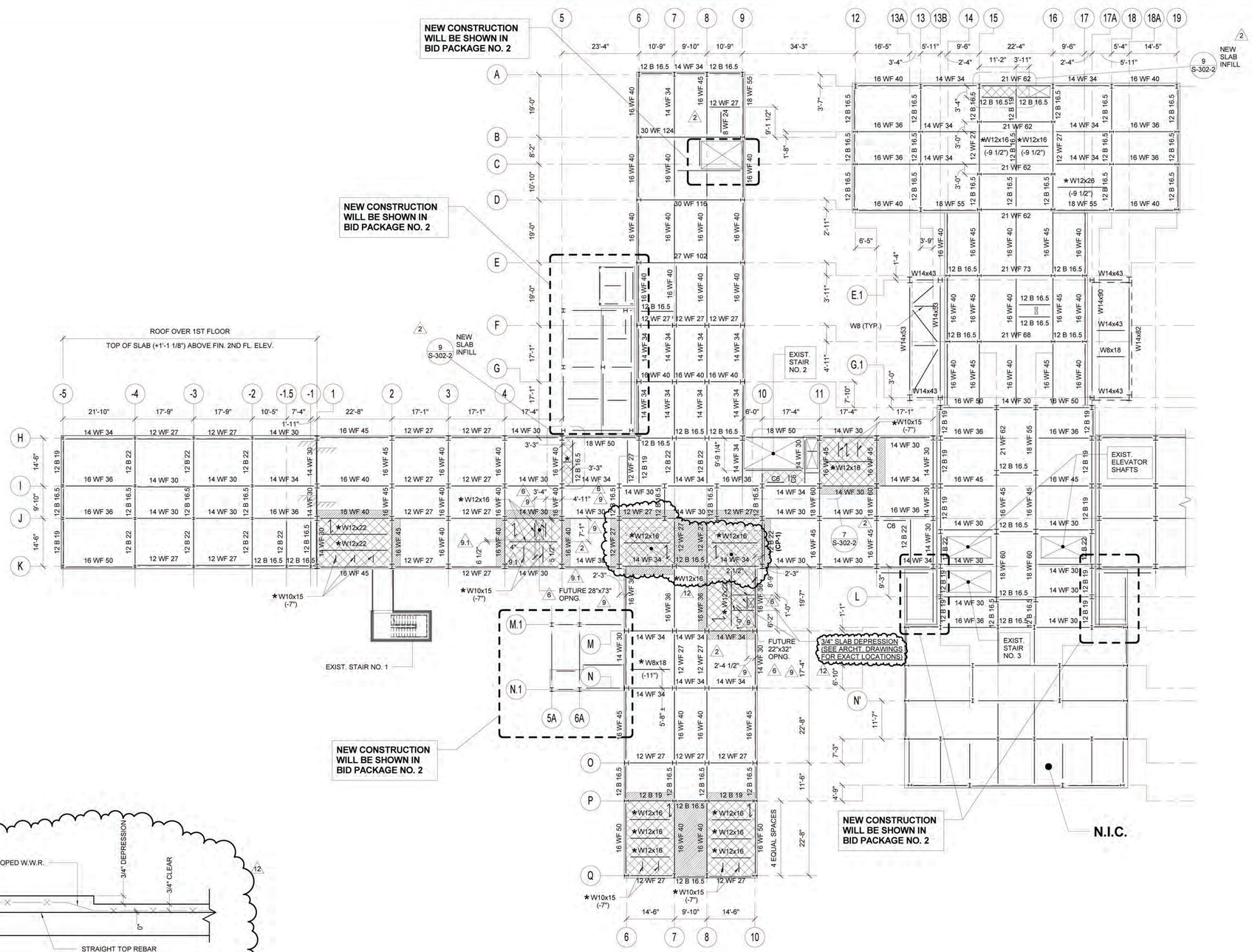

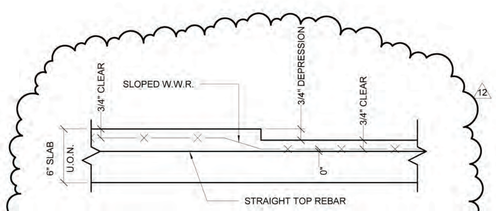

SLAB DEPRESSION DETAIL FOR ADJUSTMENT TO REINFORCEMENT PLACEMENT AT DEPRESSION TRANSITION

STRUCTURAL SECOND FLOOR FRAMING PLAN

NOTES:

1. TOP OF CONCRETE FINISH FLOOR EL. +43.50' (U.O.N.)
2. NEW CONCRETE SLAB CONSTRUCTION IS 4" LIGHTWEIGHT CONCRETE REINFORCED WITH WWF6x6 W2.0xW2.0 OVER 2" COMPOSITE METAL DECK LOCK FLOOR 20GA BY USD.
3. WORK ON THIS FLOOR IS LIMITED TO STRENGHTENING OF EXISTING CONCRETE FLOOR (U.O.N.). THE AREA OF WORK IS SHOWN ON THIS DRAWING AS A HATCHED AREA. SEE SHEET LEGEND. FOR THE FLOOR CONSTRUCTION IN THE AREA OF STRENGTHENING, SEE DETAILS 1, 2, 3, 7/S-301-2.
4. WHEN LOCATION OF NEW BEAM IS NOT SHOWN, PLACE IT IN THE MIDDLE OF A FRAMING BAY (BASED ON CENTERLINE OF COLUMNS), OR EQUAL SPACING.
5. TOP OF EXISTING STEEL ELEVATION 6" BELOW FINISH FLOOR ELEVATION, U.O.N.
6. SYMBOL (-11") INDICATES TOP OF NEW STEEL BEAM DISTANCE WITH REFERENCE TO FINISH FLOOR ELEVATION.
7. ALL EXISTING STEEL BEAMS ARE ENCASED IN CONCRETE. FOR NEW BEAM CONNECTION TO EXIST. BEAM, ENCASEMENT SHALL BE REMOVED LOCALLY AND PATCHED AFTER INSTALLATION.

TYPICAL FLOOR LEGEND

- EXISTING FLOOR CONSTRUCTION TO REMAIN (SEE DEMOLITION PLANS FOR AREAS OF NEW NONSTRUCTURAL L.W. CONCRETE TOPPING AT PREVIOUSLY REMOVED CERAMIC AND QUARRY TILE)
- 3 — EXISTING FLOOR SLAB TO BE REPLACED WITH NEW FLOOR CONSTRUCTION (SEE DETAIL 1/S-301-2), U.O.N.
- AREA OF REMOVED CONCRETE FLOOR FILL TO BE INFILLED WITH NEW REINFORCED L.W. CONCRETE (SEE DETAIL 3/S-301-2)
- 16 WF 36 — DENOTES EXISTING FLOOR BEAM TO REMAIN
- ** 16 WF 36 [...] — DENOTES EXISTING FLOOR BEAM TO REMAIN AND BE REINFORCED WITH WELDED SHEAR STUDS (REFER TO TYPICAL FLOOR RECONSTRUCTION DETAILS)
- * W12x26 — * DENOTES NEW FLOOR BEAM UNDER SOLID CONC. SLAB OR CONC. JOISTS, SEE DETAILS 1 & 4/S-301-2, TOP OF STEEL ELEVATIONS IS 6" BELOW FINISH FLOOR ELEVATION, U.O.N.
- DENOTES SPAN DIRECTION OF METAL DECK FOR NEW CONCRETE SLAB, SEE DETAIL 1/S-301-2
- (WT-X) — DENOTES NEW WELDED WT REINFORCING MEMBER, SEE DETAIL 1/S-303-2
- (CP-X) — DENOTES NEW WELDED REINFORCING COVER PLATE, SEE DETAIL 1/S-303-2
- 6, 9 — DENOTES OUTLINE OF FUTURE TYPICAL FLOOR OPENING TO BE SAW CUT FOR **BID PACKAGE NO. 2** IN NEW FLOOR CONSTRUCTION (REFER TO TYPICAL DETAIL 6/S-301-2)

NOTE: SEE DETAIL 1/S-301-2 FOR SUGGESTED SEQUENCE FOR NEW FLOOR CONSTRUCTION.

- 6 — DENOTES FUTURE FLOOR OPENING AT BOTTOM OF MECH. SHAFT, OPENING TO BE SAW CUT FOR **BID PACKAGE NO. 2** IN NEW FLOOR CONSTRUCTION (REFER TO TYPICAL DETAIL 6/S-301-2)
- 9 — DENOTES NEW DEPRESSED SLAB AREA (REFER TO ARCHITECTURAL DRAWINGS, AS-100 SERIES, FOR EXACT LOCATIONS AND SIZE)

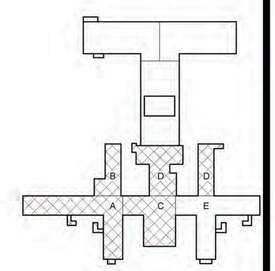

PROJECT NORTH

SCALE: 1/16" = 1'-0"

REFERENCE ONLY FROM BID PACKAGE 1

NYS OFFICE OF GENERAL SERVICES
Serving New York
ANDREW M. CUOMO, Governor
ROANN M. DESTITO, Commissioner

CONSULTANTS:
RBSD ARCHITECTS P.C. | STV 100 Years
A Joint Venture
225 Park Avenue South
New York, New York 10003

WARNING:
THE ALTERATION OF THIS MATERIAL IN ANY WAY, UNLESS DONE UNDER THE DIRECTION OF A COMPARABLE PROFESSIONAL, I.E. ARCHITECT FOR AN ARCHITECT, ENGINEER FOR AN ENGINEER OR LANDSCAPE ARCHITECT FOR A LANDSCAPE ARCHITECT, IS A VIOLATION OF THE NEW YORK STATE EDUCATION LAW AND/OR REGULATIONS AND IS A CLASS 'A' MISDEMEANOR.

CONTRACT: CONSTRUCTION
TITLE: PHASE 1 WORK: DEMOLITION, ASBESTOS REMOVAL, STRENGTHEN FLOOR SLABS & REPLACE WINDOWS
LOCATION: MANHATTAN PSYCHIATRIC CENTER, BUILDING No. 102, 600 EAST 125TH STREET WARDS ISLAND, NY 10035
CLIENT: NYS OFFICE OF MENTAL HEALTH

PROGRESS PRINT

MARK	DATE	DESCRIPTION
12	6-17-2015	BULLETIN NO. 12
9.1	4-29-2015	BULLETIN NO. 9.1
9	4-8-2015	BULLETIN NO. 9
6	3-9-2015	BULLETIN NO. 6
3	7-17-2014	ADDENDUM NO. 3
2	6-30-2014	ADDENDUM NO. 2

PROJECT NUMBER:	44579
DESIGNED BY:	MR
DRAWN BY:	CJL
FIELD CHECK:	ACC/JM
APPROVED:	ACC

SHEET TITLE: STRUCTURAL SECOND FLOOR FRAMING PLAN

BUILDING NUMBER: 102
DRAWING NUMBER: S-102-2
SHEET

6/12/2015 4:57:22 PM

TYPICAL FLOOR LEGEND

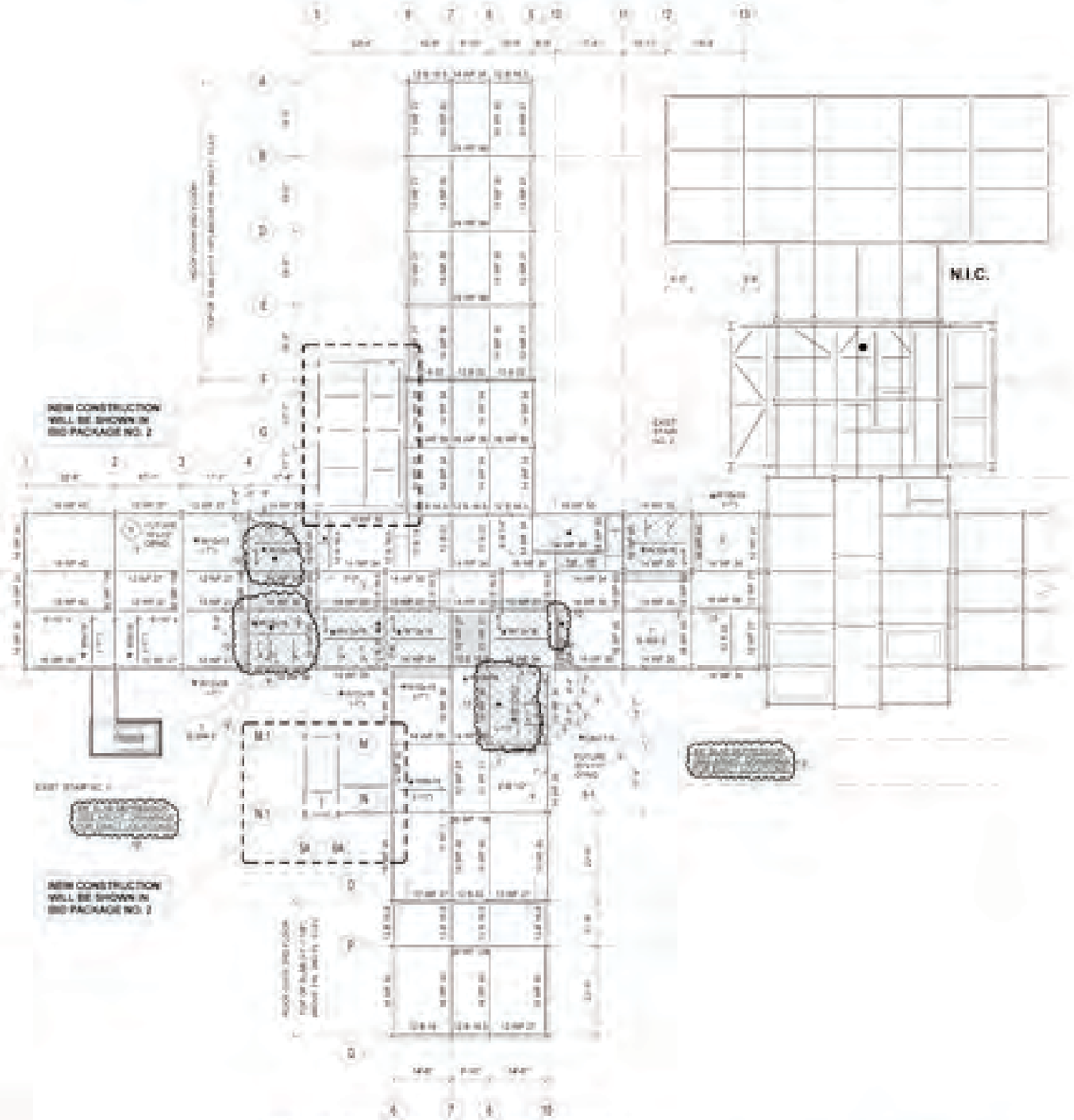

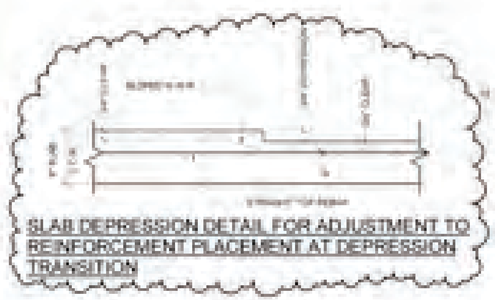

SLAB DEPRESSION DETAIL FOR ADJUSTMENT TO REINFORCEMENT PLACEMENT AT DEPRESSION TRANSITION

STRUCTURAL THIRD FLOOR FRAMING PLAN

NOTE:

1. TOP OF CONCRETE FINISH FLOOR EL. +90'-0" U.O.N.
2. NEW CONCRETE SLAB CONSTRUCTION IS A LIGHTWEIGHT CONCRETE REINFORCED WITH WIRE FABRIC OVER 2" COMPOSITE METAL DECK LOCK FLOOR FOR BID PKG.
3. WORK ON THIS FLOOR IS LIMITED TO STRENGTHENING OF EXISTING CONCRETE FLOOR SLAB.
4. THE AREA OF WORK IS SHOWN ON THIS DRAWING AS A HATCHED AREA. SEE SHEET LEGEND FOR THE FLOOR CONSTRUCTION IN THE AREA OF STRENGTHENING. SEE DETAILS 1, 2, 3, TS-301.
5. MAIN LOCATION OF NEW BEAM IS NOT SHOWN. PLACE IT IN THE MIDDLE OF A FRAMING BAY BASED ON CENTERLINE OF COLUMNS, OR EQUAL SPACING.
6. TOP OF EXISTING STEEL ELEVATION IF BELOW FINISH FLOOR ELEVATION, USE FLOOR ELEVATION.
7. ALL EXISTING STEEL BEAMS ARE ENCASED IN CONCRETE. FOR NEW BEAM CONNECTION TO EXIST. BEAM, ENCASEMENT SHALL BE REMOVED LOCALLY AND PATCHED AFTER INSTALLATION.

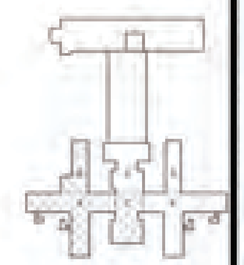

REFERENCE ONLY FROM BID PACKAGE 1

Serving New York

RBSD | STV 100

A Joint Venture
225 Park Avenue South
New York, New York 10003

CONSTRUCTION
PHASE I WORK
DEMOLITION, ASBESTOS REMOVAL, STRENGTHEN FLOOR SLABS & REPLACE WINDOWS

MANHATTAN PSYCHIATRIC CENTER, BUILDING No. 102
600 EAST 125TH STREET WARDS ISLAND NY 10035

NYS OFFICE OF MENTAL HEALTH

PROGRESS PRINT

MARK	DATE	DESCRIPTION
	5-17-2015	BULLETIN NO. 12
	4-29-2015	BULLETIN NO. 9.1
	4-8-2015	BULLETIN NO. 9
	3-9-2015	BULLETIN NO. 6
	7-17-2014	ADDENDUM NO. 3
	6-30-2014	ADDENDUM NO. 2

PROJECT NUMBER	44579
DESIGNED BY	MB
DRAWN BY	CJL
FIELD CHECK	ACC/JM
APPROVED	ACC

STRUCTURAL THIRD FLOOR FRAMING PLAN

BUILDING NUMBER: 102
DRAWING NUMBER: S-103-2

TYPICAL FLOOR LEGEND

- EXISTING FLOOR CONSTRUCTION TO REMAIN (SEE DEMOLITION PLANS FOR AREAS OF NEW NONSTRUCTURAL L.W. CONCRETE TOPPING AT PREVIOUSLY REMOVED CERAMIC AND QUARRY TILE)
- EXISTING FLOOR SLAB TO BE REPLACED WITH NEW FLOOR CONSTRUCTION (SEE DETAIL 1/S-301-2). U.O.N.
- AREA OF REMOVED CONCRETE FLOOR FILL TO BE INFILLED WITH NEW REINFORCED L.W. CONCRETE (SEE DETAIL 3/S-301-2)
- 16 WF 36 — DENOTES EXISTING FLOOR BEAM TO REMAIN
- ** 16 WF 36 [...] — DENOTES EXISTING FLOOR BEAM TO REMAIN AND BE REINFORCED WITH WELDED SHEAR STUDS (REFER TO TYPICAL FLOOR RECONSTRUCTION DETAILS)
- * W12x26 — * DENOTES NEW FLOOR BEAM UNDER SOLID CONC SLAB OR CONC JOISTS, SEE DETAILS 1 & 4/S-301-2. TOP OF STEEL ELEVATIONS IS 6" BELOW FINISH FLOOR ELEVATION, U.O.N.
- DENOTES SPAN DIRECTION OF METAL DECK FOR NEW CONCRETE SLAB, SEE DETAIL 1/S-301-2
- (WT-X) — DENOTES NEW WELDED WT REINFORCING MEMBER, SEE DETAIL 1/S-303-2
- (CP-X) — DENOTES NEW WELDED REINFORCING COVER PLATE, SEE DETAIL 1/S-303-2
- DENOTES OUTLINE OF FUTURE TYPICAL FLOOR OPENING TO BE SAW CUT FOR **BID PACKAGE NO. 2** IN NEW FLOOR CONSTRUCTION (REFER TO TYPICAL DETAIL 6/S-301-2)

NOTE: SEE DETAIL 1/S-301-2 FOR SUGGESTED SEQUENCE FOR NEW FLOOR CONSTRUCTION

- S — DENOTES FUTURE FLOOR OPENING AT BOTTOM OF MECH SHAFT, OPENING TO BE SAW CUT FOR **BID PACKAGE NO. 2** IN NEW FLOOR CONSTRUCTION (REFER TO TYPICAL DETAIL 6/S-301-2)
- DENOTES NEW DEPRESSED SLAB AREA (REFER TO ARCHITECTURAL DRAWINGS: AS-100 SERIES, FOR EXACT LOCATIONS AND SIZE)

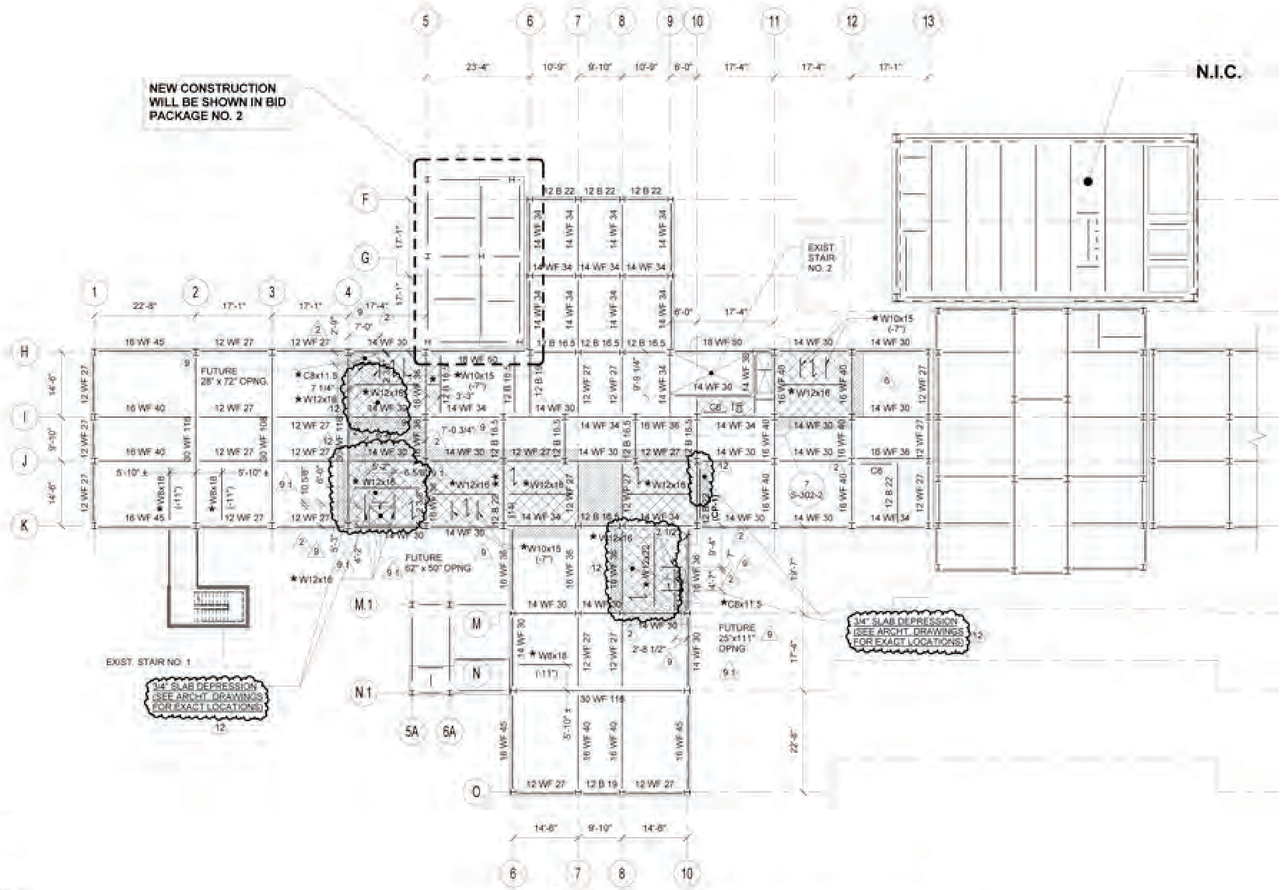

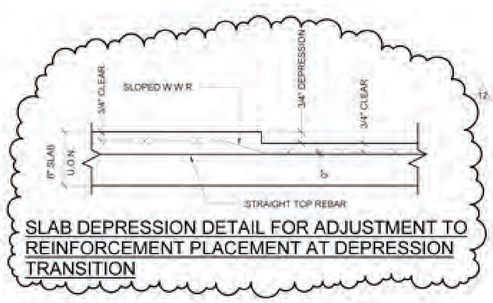

SLAB DEPRESSION DETAIL FOR ADJUSTMENT TO REINFORCEMENT PLACEMENT AT DEPRESSION TRANSITION

STRUCTURAL FOURTH AND FIFTH FLOOR FRAMING PLAN

NOTE:

1. 4TH FLOOR TOP OF CONCRETE FINISH FLOOR EL. +68.00' (U.O.N.)
   5TH FLOOR TOP OF CONCRETE FINISH FLOOR EL. +80.25' (U.O.N.)
2. NEW CONCRETE SLAB CONSTRUCTION IS 4" LIGHTWEIGHT CONCRETE REINFORCED WITH WWF 6x6 W2.0/W2.0 OVER 2" COMPOSITE METAL DECK LOCK FLOOR 20GA BY USD
3. WORK ON THIS FLOOR IS LIMITED TO STRENGTHENING OF EXISTING CONCRETE FLOOR (U.O.N.)
   THE AREA OF WORK IS SHOWN ON THIS DRAWING AS A HATCHED AREA, SEE SHEET LEGEND. FOR THE FLOOR CONSTRUCTION IN THE AREA OF STRENGTHENING, SEE DETAILS 1, 2, 3, 7/S-301-2
4. WHEN LOCATION OF NEW BEAM IS NOT SHOWN, PLACE IT IN THE MIDDLE OF A FRAMING BAY (BASED ON CENTERLINE OF COLUMNS), OR EQUAL SPACING
5. TOP OF EXISTING STEEL ELEVATION 6" BELOW FINISH FLOOR ELEVATION, U.O.N.
6. SYMBOL (-11") INDICATES TOP OF NEW STEEL BEAM DISTANCE WITH REFERENCE TO FINISH FLOOR ELEVATION.
7. ALL EXISTING STEEL BEAMS ARE ENCASED IN CONCRETE. FOR NEW BEAM CONNECTION TO EXIST. BEAM ENCASEMENT SHALL BE REMOVED LOCALLY AND PATCHED AFTER INSTALLATION.

N

0 8' 16' 32'
SCALE: 1/16" = 1'-0"

REFERENCE ONLY FROM BID PACKAGE 1

NYS OFFICE OF GENERAL SERVICES
Serving New York
ANDREW M. CUOMO Governor
ROANN M. DESTITO Commissioner

CONSULTANTS:
RBSD ARCHITECTS PC | STV 100 Years
A Joint Venture
225 Park Avenue South
New York, New York 10003

WARNING:
THE ALTERATION OF THIS MATERIAL IN ANY WAY, UNLESS DONE UNDER THE DIRECTION OF A COMPARABLE PROFESSIONAL, I.E. ARCHITECT FOR AN ARCHITECT, ENGINEER FOR AN ENGINEER OR LANDSCAPE ARCHITECT FOR A LANDSCAPE ARCHITECT, IS A VIOLATION OF THE NEW YORK STATE EDUCATION LAW AND/OR REGULATIONS AND IS A CLASS "A" MISDEMEANOR.

CONTRACT: CONSTRUCTION
TITLE: PHASE 1 WORK: DEMOLITION, ASBESTOS REMOVAL, STRENGTHEN FLOOR SLABS & REPLACE WINDOWS
LOCATION: MANHATTAN PSYCHIATRIC CENTER, BUILDING No. 102, 600 EAST 125TH STREET WARDS ISLAND, NY 10035
CLIENT: NYS OFFICE OF MENTAL HEALTH

PROGRESS PRINT

MARK	DATE	DESCRIPTION
12	6-17-2015	BULLETIN NO. 12
9.1	4-29-2015	BULLETIN NO. 9.1
9	4-8-2015	BULLETIN NO. 9
6	3-9-2015	BULLETIN NO. 6
3	7-17-2014	ADDENDUM NO. 3
2	6-30-2014	ADDENDUM NO. 2

PROJECT NUMBER:	44579
DESIGNED BY:	MR
DRAWN BY:	CJL
FIELD CHECK:	ACC/JM
APPROVED:	ACC

SHEET TITLE: STRUCTURAL FOURTH AND FIFTH FLOOR FRAMING PLAN

BUILDING NUMBER: 102
DRAWING NUMBER: S-104-2
SHEET

6/12/2015 4:37:23 PM

TYPICAL FLOOR LEGEND

- EXISTING FLOOR CONSTRUCTION TO REMAIN (SEE DEMOLITION PLANS FOR AREAS OF NEW NONSTRUCTURAL L.W. CONCRETE TOPPING AT PREVIOUSLY REMOVED CERAMIC AND QUARRY TILE) (3)
- EXISTING FLOOR SLAB TO BE REPLACED WITH NEW FLOOR CONSTRUCTION (SEE DETAIL 1/S-301-2), U.O.N.
- AREA OF REMOVED CONCRETE FLOOR FILL TO BE INFILLED WITH NEW REINFORCED L.W. CONCRETE (SEE DETAIL 3/S-301-2)
- 16 WF 36 — DENOTES EXISTING FLOOR BEAM TO REMAIN
- ** 16 WF 36 [...] — DENOTES EXISTING FLOOR BEAM TO REMAIN AND BE REINFORCED WITH WELDED SHEAR STUDS (REFER TO TYPICAL FLOOR RECONSTRUCTION DETAILS)
- * W12x26 — * DENOTES NEW FLOOR BEAM UNDER SOLID CONC. SLAB OR CONC. JOISTS, SEE DETAILS 1 & 4/S-301-2, TOP OF STEEL ELEVATIONS IS 6" BELOW FINISH FLOOR ELEVATION, U.O.N.
- DENOTES SPAN DIRECTION OF METAL DECK FOR NEW CONCRETE SLAB, SEE DETAIL 1/S-301-2
- (WT-X) — DENOTES NEW WELDED WT REINFORCING MEMBER, SEE DETAIL 1/S-303-2
- (CP-X) — DENOTES NEW WELDED REINFORCING COVER PLATE, SEE DETAIL 1/S-303-2
- (6) (9) DENOTES OUTLINE OF FUTURE TYPICAL FLOOR OPENING TO BE SAW CUT FOR **BID PACKAGE NO. 2** IN NEW FLOOR CONSTRUCTION (REFER TO TYPICAL DETAIL 6/S-301-2)

NOTE: SEE DETAIL 1/S-301-2 FOR SUGGESTED SEQUENCE FOR NEW FLOOR CONSTRUCTION. (6)

- (S) DENOTES FUTURE FLOOR OPENING AT BOTTOM OF MECH. SHAFT, OPENING TO BE SAW CUT FOR **BID PACKAGE NO. 2** IN NEW FLOOR CONSTRUCTION (REFER TO TYPICAL DETAIL 6/S-301-2) (9)
- DENOTES NEW DEPRESSED SLAB AREA (REFER TO ARCHITECTURAL DRAWINGS, AS-100 SERIES, FOR EXACT LOCATIONS AND SIZE)

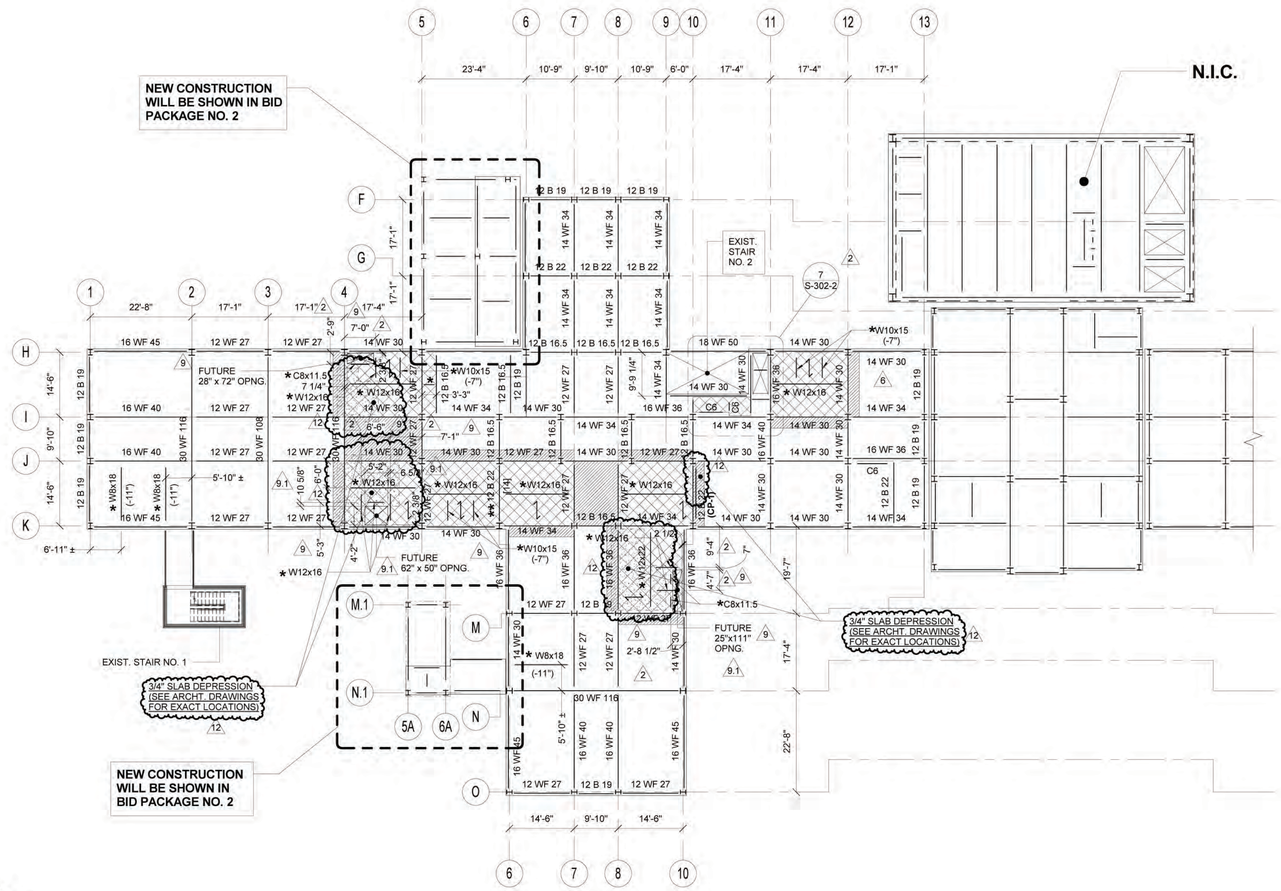

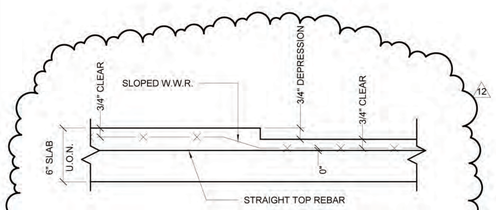

SLAB DEPRESSION DETAIL FOR ADJUSTMENT TO REINFORCEMENT PLACEMENT AT DEPRESSION TRANSITION

STRUCTURAL SIXTH, SEVENTH, AND EIGHTH FLOOR FRAMING PLAN

NOTES:

1. 6TH FLOOR TOP OF CONCRETE FINISH FLOOR EL. +92.50' (U.O.N.)
   7TH FLOOR TOP OF CONCRETE FINISH FLOOR EL. +104.75 (U.O.N.)
   8TH FLOOR TOP OF CONCRETE FINISH FLOOR EL. +117.00 (U.O.N.)
2. NEW CONCRETE SLAB CONSTRUCTION IS 4" LIGHTWEIGHT CONCRETE REINFORCED WITH WWF 6x6 W2.0xW2.0 OVER 2" COMPOSITE METAL DECK LOCK FLOOR 20GA BY USD.
3. WORK ON THIS FLOOR IS LIMITED TO STRENGHTENING OF EXISTING CONCRETE FLOOR (U.O.N.). THE AREA OF WORK IS SHOWN ON THIS DRAWING AS A HATCHED AREA, SEE SHEET LEGEND. FOR THE FLOOR CONSTRUCTION IN THE AREA OF STRENGTHENING, SEE DETAILS 1, 2, 3, 7/S-301-2.
4. WHEN LOCATION OF NEW BEAM IS NOT SHOWN, PLACE IT IN THE MIDDLE OF A FRAMING BAY (BASED ON CENTERLINE OF COLUMNS), OR EQUAL SPACING.
5. TOP OF EXISTING STEEL ELEVATION 6" BELOW FINISH FLOOR ELEVATION, U.O.N.
6. SYMBOL (-11") INDICATES TOP OF NEW STEEL BEAM DISTANCE WITH REFERENCE TO FINISH FLOOR ELEVATION.
7. ALL EXISTING STEEL BEAMS ARE ENCASED IN CONCRETE. FOR NEW BEAM CONNECTION TO EXIST. BEAM, ENCASEMENT SHALL BE REMOVED LOCALLY AND PATCHED AFTER INSTALLATION.

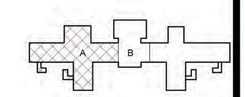

0 8' 16' 32'
SCALE: 1/16" = 1'-0"

REFERENCE ONLY FROM BID PACKAGE 1

NYS OFFICE OF GENERAL SERVICES
Serving New York
ANDREW M. CUOMO, Governor
ROANN M. DESTITO, Commissioner

CONSULTANTS:
RBSD ARCHITECTS P.C. | STV 100 Years
A Joint Venture
225 Park Avenue South
New York, New York 10003

WARNING:
THE ALTERATION OF THIS MATERIAL IN ANY WAY, UNLESS DONE UNDER THE DIRECTION OF A COMPARABLE PROFESSIONAL, I.E. ARCHITECT FOR AN ARCHITECT, ENGINEER FOR AN ENGINEER OR LANDSCAPE ARCHITECT FOR A LANDSCAPE ARCHITECT, IS A VIOLATION OF THE NEW YORK STATE EDUCATION LAW AND/OR REGULATIONS AND IS A CLASS 'A' MISDEMEANOR.

CONTRACT: CONSTRUCTION
TITLE: PHASE 1 WORK: DEMOLITION, ASBESTOS REMOVAL, STRENGTHEN FLOOR SLABS & REPLACE WINDOWS
LOCATION: MANHATTAN PSYCHIATRIC CENTER, BUILDING No. 102, 600 EAST 125TH STREET WARDS ISLAND, NY 10035
CLIENT: NYS OFFICE OF MENTAL HEALTH

PROGRESS PRINT

MARK	DATE	DESCRIPTION
12	6-17-2015	BULLETIN NO. 12
9.1	4-29-2015	BULLETIN NO. 9.1
9	4-8-2015	BULLETIN NO. 9
6	3-9-2015	BULLETIN NO. 6
3	7-17-2014	ADDENDUM NO. 3
2	6-30-2014	ADDENDUM NO. 2

PROJECT NUMBER:	44579
DESIGNED BY:	MR
DRAWN BY:	CJL
FIELD CHECK:	ACC/JM
APPROVED:	ACC

SHEET TITLE: STRUCTURAL SIXTH, SEVENTH, AND EIGHTH FLOOR FRAMING PLAN

BUILDING NUMBER: 102
DRAWING NUMBER: S-105-2
SHEET

6/12/2015 4:57:23 PM

TYPICAL FLOOR LEGEND

- EXISTING FLOOR CONSTRUCTION TO REMAIN (SEE DEMOLITION PLANS FOR AREAS OF NEW NONSTRUCTURAL L.W. CONCRETE TOPPING AT PREVIOUSLY REMOVED CERAMIC AND QUARRY TILE)
- EXISTING FLOOR SLAB TO BE REPLACED WITH NEW FLOOR CONSTRUCTION (SEE DETAIL 1/S-301-2). U.O.N.
- AREA OF REMOVED CONCRETE FLOOR FILL TO BE INFILLED WITH NEW REINFORCED L.W. CONCRETE (SEE DETAIL 3/S-301-2)
- 16 WF 36 — DENOTES EXISTING FLOOR BEAM TO REMAIN
- ** 16 WF 36 [...] — DENOTES EXISTING FLOOR BEAM TO REMAIN AND BE REINFORCED WITH WELDED SHEAR STUDS (REFER TO TYPICAL FLOOR RECONSTRUCTION DETAILS)
- * W12x26 — * DENOTES NEW FLOOR BEAM UNDER SOLID CONC SLAB OR CONC JOISTS, SEE DETAILS 1 & 4/S-301-2. TOP OF STEEL ELEVATIONS IS 6" BELOW FINISH FLOOR ELEVATION, U.O.N.
- DENOTES SPAN DIRECTION OF METAL DECK FOR NEW CONCRETE SLAB, SEE DETAIL 1/S-301-2
- (WT-X) — DENOTES NEW WELDED WT REINFORCING MEMBER, SEE DETAIL 1/S-303-2
- (CP-X) — DENOTES NEW WELDED REINFORCING COVER PLATE, SEE DETAIL 1/S-303-2
- DENOTES OUTLINE OF FUTURE TYPICAL FLOOR OPENING TO BE SAW CUT FOR **BID PACKAGE NO. 2** IN NEW FLOOR CONSTRUCTION (REFER TO TYPICAL DETAIL 6/S-301-2)

NOTE: SEE DETAIL 1/S-301-2 FOR SUGGESTED SEQUENCE FOR NEW FLOOR CONSTRUCTION

- S — DENOTES FUTURE FLOOR OPENING AT BOTTOM OF MECH SHAFT, OPENING TO BE SAW CUT FOR **BID PACKAGE NO. 2** IN NEW FLOOR CONSTRUCTION (REFER TO TYPICAL DETAIL 6/S-301-2)
- DENOTES NEW DEPRESSED SLAB AREA (REFER TO ARCHITECTURAL DRAWINGS: AS-100 SERIES, FOR EXACT LOCATIONS AND SIZE)

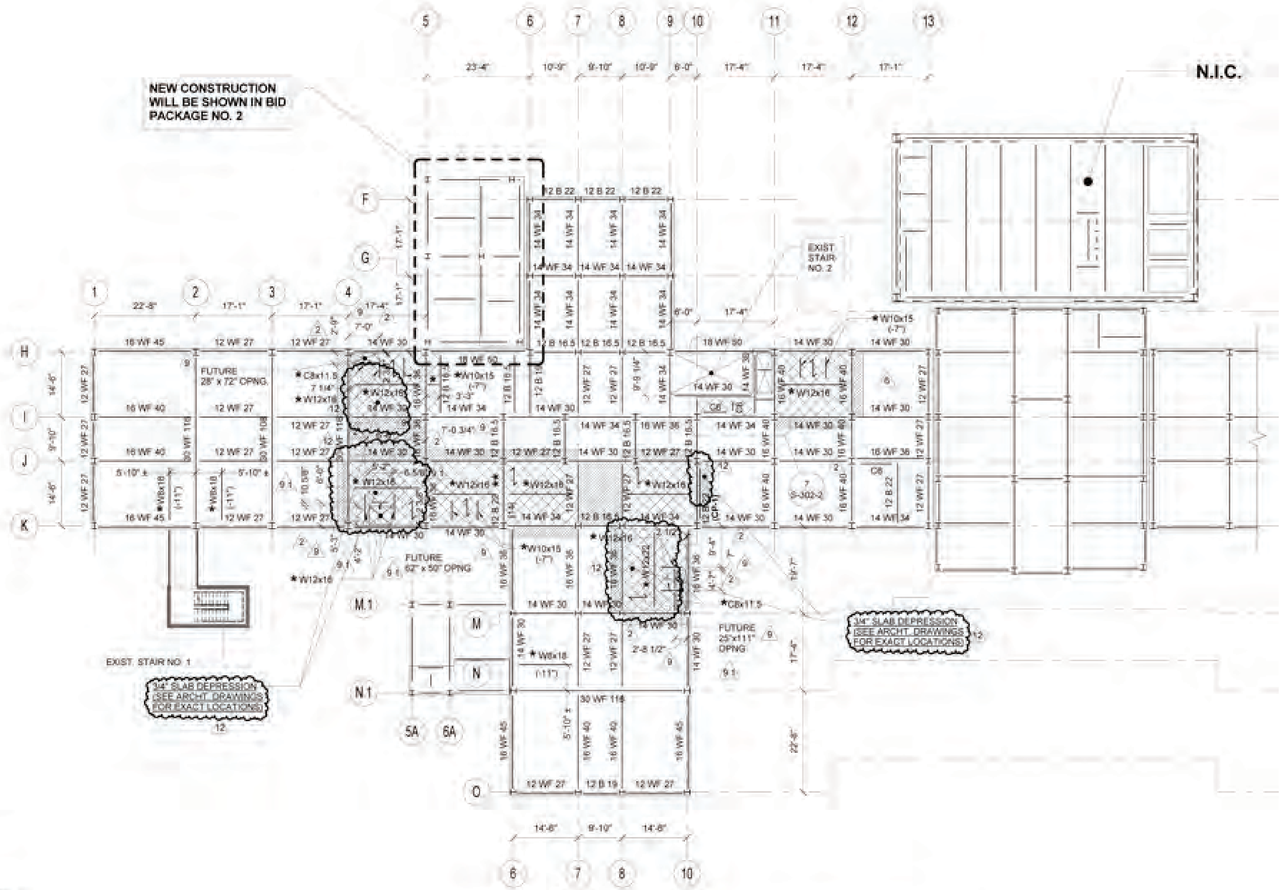

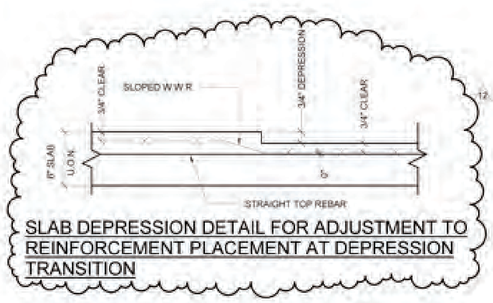

SLAB DEPRESSION DETAIL FOR ADJUSTMENT TO REINFORCEMENT PLACEMENT AT DEPRESSION TRANSITION

STRUCTURAL FOURTH AND FIFTH FLOOR FRAMING PLAN

NOTE:

1. 4TH FLOOR TOP OF CONCRETE FINISH FLOOR EL. +68.00' (U.O.N.)
   5TH FLOOR TOP OF CONCRETE FINISH FLOOR EL. +80.25' (U.O.N.)
2. NEW CONCRETE SLAB CONSTRUCTION IS 4" LIGHTWEIGHT CONCRETE REINFORCED WITH WWF 6x6 W2.0/W2.0 OVER 2" COMPOSITE METAL DECK LOCK FLOOR 20GA BY USD
3. WORK ON THIS FLOOR IS LIMITED TO STRENGTHENING OF EXISTING CONCRETE FLOOR (U.O.N.)
   THE AREA OF WORK IS SHOWN ON THIS DRAWING AS A HATCHED AREA, SEE SHEET LEGEND. FOR THE FLOOR CONSTRUCTION IN THE AREA OF STRENGTHENING, SEE DETAILS 1, 2, 3, 7/S-301-2
4. WHEN LOCATION OF NEW BEAM IS NOT SHOWN, PLACE IT IN THE MIDDLE OF A FRAMING BAY (BASED ON CENTERLINE OF COLUMNS), OR EQUAL SPACING
5. TOP OF EXISTING STEEL ELEVATION 6" BELOW FINISH FLOOR ELEVATION, U.O.N.
6. SYMBOL (-11") INDICATES TOP OF NEW STEEL BEAM DISTANCE WITH REFERENCE TO FINISH FLOOR ELEVATION.
7. ALL EXISTING STEEL BEAMS ARE ENCASED IN CONCRETE. FOR NEW BEAM CONNECTION TO EXIST. BEAM ENCASEMENT SHALL BE REMOVED LOCALLY AND PATCHED AFTER INSTALLATION.

N

0 8' 16' 32'
SCALE: 1/16" = 1'-0"

REFERENCE ONLY FROM BID PACKAGE 1

NYS OFFICE OF GENERAL SERVICES
Serving New York
ANDREW M. CUOMO Governor
ROANN M. DESTITO Commissioner

CONSULTANTS:
RBSD ARCHITECTS PC | STV 100 Years
A Joint Venture
225 Park Avenue South
New York, New York 10003

WARNING:
THE ALTERATION OF THIS MATERIAL IN ANY WAY, UNLESS DONE UNDER THE DIRECTION OF A COMPARABLE PROFESSIONAL, I.E. ARCHITECT FOR AN ARCHITECT, ENGINEER FOR AN ENGINEER OR LANDSCAPE ARCHITECT FOR A LANDSCAPE ARCHITECT, IS A VIOLATION OF THE NEW YORK STATE EDUCATION LAW AND/OR REGULATIONS AND IS A CLASS "A" MISDEMEANOR.

CONTRACT: CONSTRUCTION
TITLE: PHASE 1 WORK: DEMOLITION, ASBESTOS REMOVAL, STRENGTHEN FLOOR SLABS & REPLACE WINDOWS
LOCATION: MANHATTAN PSYCHIATRIC CENTER, BUILDING No. 102, 600 EAST 125TH STREET WARDS ISLAND, NY 10035
CLIENT: NYS OFFICE OF MENTAL HEALTH

PROGRESS PRINT

MARK	DATE	DESCRIPTION
12	6-17-2015	BULLETIN NO. 12
9.1	4-29-2015	BULLETIN NO. 9.1
9	4-8-2015	BULLETIN NO. 9
6	3-9-2015	BULLETIN NO. 6
3	7-17-2014	ADDENDUM NO. 3
2	6-30-2014	ADDENDUM NO. 2

PROJECT NUMBER:	44579
DESIGNED BY:	MR
DRAWN BY:	CJL
FIELD CHECK:	ACC/JM
APPROVED:	ACC

SHEET TITLE: STRUCTURAL FOURTH AND FIFTH FLOOR FRAMING PLAN

BUILDING NUMBER: 102
DRAWING NUMBER: S-104-2
SHEET

6/12/2015 4:37:23 PM

TYPICAL FLOOR LEGEND

- EXISTING FLOOR CONSTRUCTION TO REMAIN (SEE DEMOLITION PLANS FOR AREAS OF NEW NONSTRUCTURAL L.W. CONCRETE TOPPING AT PREVIOUSLY REMOVED CERAMIC AND QUARRY TILE) (3)
- EXISTING FLOOR SLAB TO BE REPLACED WITH NEW FLOOR CONSTRUCTION (SEE DETAIL 1/S-301-2), U.O.N.
- AREA OF REMOVED CONCRETE FLOOR FILL TO BE INFILLED WITH NEW REINFORCED L.W. CONCRETE (SEE DETAIL 3/S-301-2)
- 16 WF 36 — DENOTES EXISTING FLOOR BEAM TO REMAIN
- ** 16 WF 36 [...] — DENOTES EXISTING FLOOR BEAM TO REMAIN AND BE REINFORCED WITH WELDED SHEAR STUDS (REFER TO TYPICAL FLOOR RECONSTRUCTION DETAILS)
- * W12x26 — * DENOTES NEW FLOOR BEAM UNDER SOLID CONC. SLAB OR CONC. JOISTS, SEE DETAILS 1 & 4/S-301-2, TOP OF STEEL ELEVATIONS IS 6" BELOW FINISH FLOOR ELEVATION, U.O.N.
- DENOTES SPAN DIRECTION OF METAL DECK FOR NEW CONCRETE SLAB, SEE DETAIL 1/S-301-2
- (WT-X) — DENOTES NEW WELDED WT REINFORCING MEMBER, SEE DETAIL 1/S-303-2
- (CP-X) — DENOTES NEW WELDED REINFORCING COVER PLATE, SEE DETAIL 1/S-303-2
- (6) (9) DENOTES OUTLINE OF FUTURE TYPICAL FLOOR OPENING TO BE SAW CUT FOR **BID PACKAGE NO. 2** IN NEW FLOOR CONSTRUCTION (REFER TO TYPICAL DETAIL 6/S-301-2)

NOTE: SEE DETAIL 1/S-301-2 FOR SUGGESTED SEQUENCE FOR NEW FLOOR CONSTRUCTION. (6)

- (S) DENOTES FUTURE FLOOR OPENING AT BOTTOM OF MECH. SHAFT, OPENING TO BE SAW CUT FOR **BID PACKAGE NO. 2** IN NEW FLOOR CONSTRUCTION (REFER TO TYPICAL DETAIL 6/S-301-2) (9)
- DENOTES NEW DEPRESSED SLAB AREA (REFER TO ARCHITECTURAL DRAWINGS, AS-100 SERIES, FOR EXACT LOCATIONS AND SIZE)

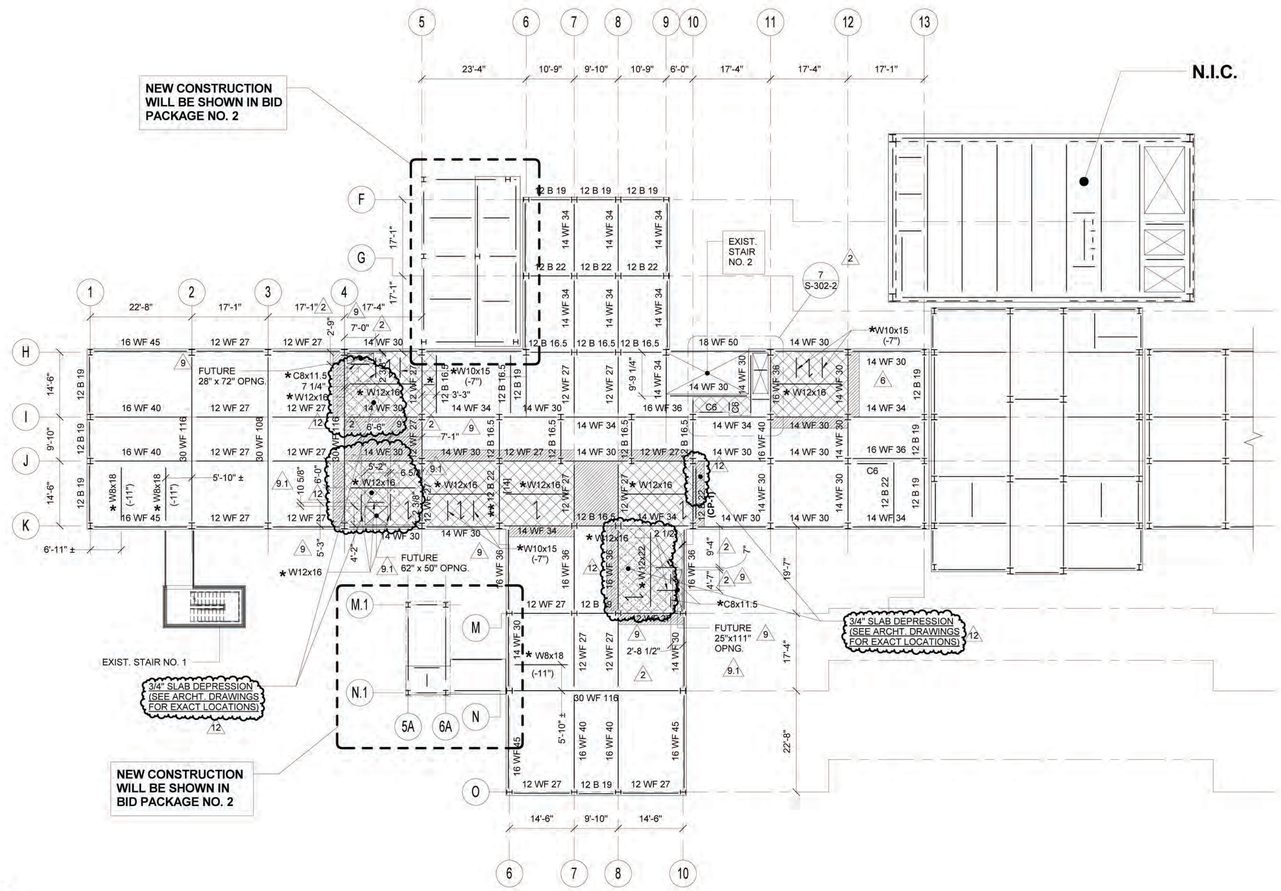

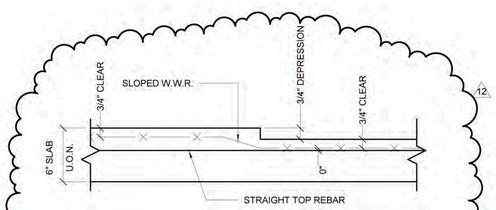

SLAB DEPRESSION DETAIL FOR ADJUSTMENT TO REINFORCEMENT PLACEMENT AT DEPRESSION TRANSITION

STRUCTURAL SIXTH, SEVENTH, AND EIGHTH FLOOR FRAMING PLAN

NOTES:

1. 6TH FLOOR TOP OF CONCRETE FINISH FLOOR EL. +92.50' (U.O.N.)
   7TH FLOOR TOP OF CONCRETE FINISH FLOOR EL. +104.75 (U.O.N.)
   8TH FLOOR TOP OF CONCRETE FINISH FLOOR EL. +117.00 (U.O.N.)
2. NEW CONCRETE SLAB CONSTRUCTION IS 4" LIGHTWEIGHT CONCRETE REINFORCED WITH WWF 6x6 W2.0xW2.0 OVER 2" COMPOSITE METAL DECK LOCK FLOOR 20GA BY USD.
3. WORK ON THIS FLOOR IS LIMITED TO STRENGHTENING OF EXISTING CONCRETE FLOOR (U.O.N.). THE AREA OF WORK IS SHOWN ON THIS DRAWING AS A HATCHED AREA, SEE SHEET LEGEND. FOR THE FLOOR CONSTRUCTION IN THE AREA OF STRENGTHENING, SEE DETAILS 1, 2, 3, 7/S-301-2.
4. WHEN LOCATION OF NEW BEAM IS NOT SHOWN, PLACE IT IN THE MIDDLE OF A FRAMING BAY (BASED ON CENTERLINE OF COLUMNS), OR EQUAL SPACING.
5. TOP OF EXISTING STEEL ELEVATION 6" BELOW FINISH FLOOR ELEVATION, U.O.N.
6. SYMBOL (-11") INDICATES TOP OF NEW STEEL BEAM DISTANCE WITH REFERENCE TO FINISH FLOOR ELEVATION.
7. ALL EXISTING STEEL BEAMS ARE ENCASED IN CONCRETE. FOR NEW BEAM CONNECTION TO EXIST. BEAM, ENCASEMENT SHALL BE REMOVED LOCALLY AND PATCHED AFTER INSTALLATION.

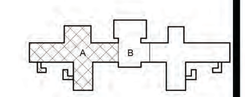

0 8' 16' 32'
SCALE: 1/16" = 1'-0"

REFERENCE ONLY FROM BID PACKAGE 1

NYS OFFICE OF GENERAL SERVICES
Serving New York
ANDREW M. CUOMO, Governor
ROANN M. DESTITO, Commissioner

CONSULTANTS:
RBSD ARCHITECTS P.C. | STV 100 Years
A Joint Venture
225 Park Avenue South
New York, New York 10003

WARNING:
THE ALTERATION OF THIS MATERIAL IN ANY WAY, UNLESS DONE UNDER THE DIRECTION OF A COMPARABLE PROFESSIONAL, I.E. ARCHITECT FOR AN ARCHITECT, ENGINEER FOR AN ENGINEER OR LANDSCAPE ARCHITECT FOR A LANDSCAPE ARCHITECT, IS A VIOLATION OF THE NEW YORK STATE EDUCATION LAW AND/OR REGULATIONS AND IS A CLASS 'A' MISDEMEANOR.

CONTRACT: CONSTRUCTION
TITLE: PHASE 1 WORK: DEMOLITION, ASBESTOS REMOVAL, STRENGTHEN FLOOR SLABS & REPLACE WINDOWS
LOCATION: MANHATTAN PSYCHIATRIC CENTER, BUILDING No. 102, 600 EAST 125TH STREET WARDS ISLAND, NY 10035
CLIENT: NYS OFFICE OF MENTAL HEALTH

PROGRESS PRINT

MARK	DATE	DESCRIPTION
12	6-17-2015	BULLETIN NO. 12
9.1	4-29-2015	BULLETIN NO. 9.1
9	4-8-2015	BULLETIN NO. 9
6	3-9-2015	BULLETIN NO. 6
3	7-17-2014	ADDENDUM NO. 3
2	6-30-2014	ADDENDUM NO. 2

PROJECT NUMBER:	44579
DESIGNED BY:	MR
DRAWN BY:	CJL
FIELD CHECK:	ACC/JM
APPROVED:	ACC

SHEET TITLE: STRUCTURAL SIXTH, SEVENTH, AND EIGHTH FLOOR FRAMING PLAN

BUILDING NUMBER: 102
DRAWING NUMBER: S-105-2
SHEET

6/12/2015 4:57:23 PM

TYPICAL FLOOR LEGEND

EXISTING FLOOR CONSTRUCTION TO REMAIN (SEE DEMOLITION PLANS FOR AREAS OF NEW NONSTRUCTURAL L.W. CONCRETE TOPPING AT PREVIOUSLY REMOVED CERAMIC AND QUARRY TILE)

EXISTING FLOOR SLAB TO BE REPLACED WITH NEW FLOOR CONSTRUCTION (SEE DETAIL 1/S-301-2), U.O.N.

AREA OF REMOVED CONCRETE FLOOR FILL TO BE INFILLED WITH NEW REINFORCED L.W. CONCRETE (SEE DETAIL 3/S-301-2)

16 WF 36 — DENOTES EXISTING FLOOR BEAM TO REMAIN

** 16 WF 36 [...] — DENOTES EXISTING FLOOR BEAM TO REMAIN AND BE REINFORCED WITH WELDED SHEAR STUDS (REFER TO TYPICAL FLOOR RECONSTRUCTION DETAILS)

* W12x26 — * DENOTES NEW FLOOR BEAM UNDER SOLID CONC. SLAB OR CONC. JOISTS, SEE DETAILS 1 & 4/S-301-2, TOP OF STEEL ELEVATIONS IS 6" BELOW FINISH FLOOR ELEVATION, U.O.N.

DENOTES SPAN DIRECTION OF METAL DECK FOR NEW CONCRETE SLAB, SEE DETAIL 1/S-301-2

(WT-X) — DENOTES NEW WELDED WT REINFORCING MEMBER, SEE DETAIL 1/S-303-2

(CP-X) — DENOTES NEW WELDED REINFORCING COVER PLATE, SEE DETAIL 1/S-303-2

DENOTES OUTLINE OF FUTURE TYPICAL FLOOR OPENING TO BE SAW CUT FOR **BID PACKAGE NO. 2** IN NEW FLOOR CONSTRUCTION (REFER TO TYPICAL DETAIL 6/S-301-2)

NOTE: SEE DETAIL 1/S-301-2 FOR SUGGESTED SEQUENCE FOR NEW FLOOR CONSTRUCTION.

DENOTES FUTURE FLOOR OPENING AT BOTTOM OF MECH. SHAFT, OPENING TO BE SAW CUT FOR **BID PACKAGE NO. 2** IN NEW FLOOR CONSTRUCTION (REFER TO TYPICAL DETAIL 6/S-301-2)

DENOTES NEW DEPRESSED SLAB AREA (REFER TO ARCHITECTURAL DRAWINGS, AS-100 SERIES, FOR EXACT LOCATIONS AND SIZE)

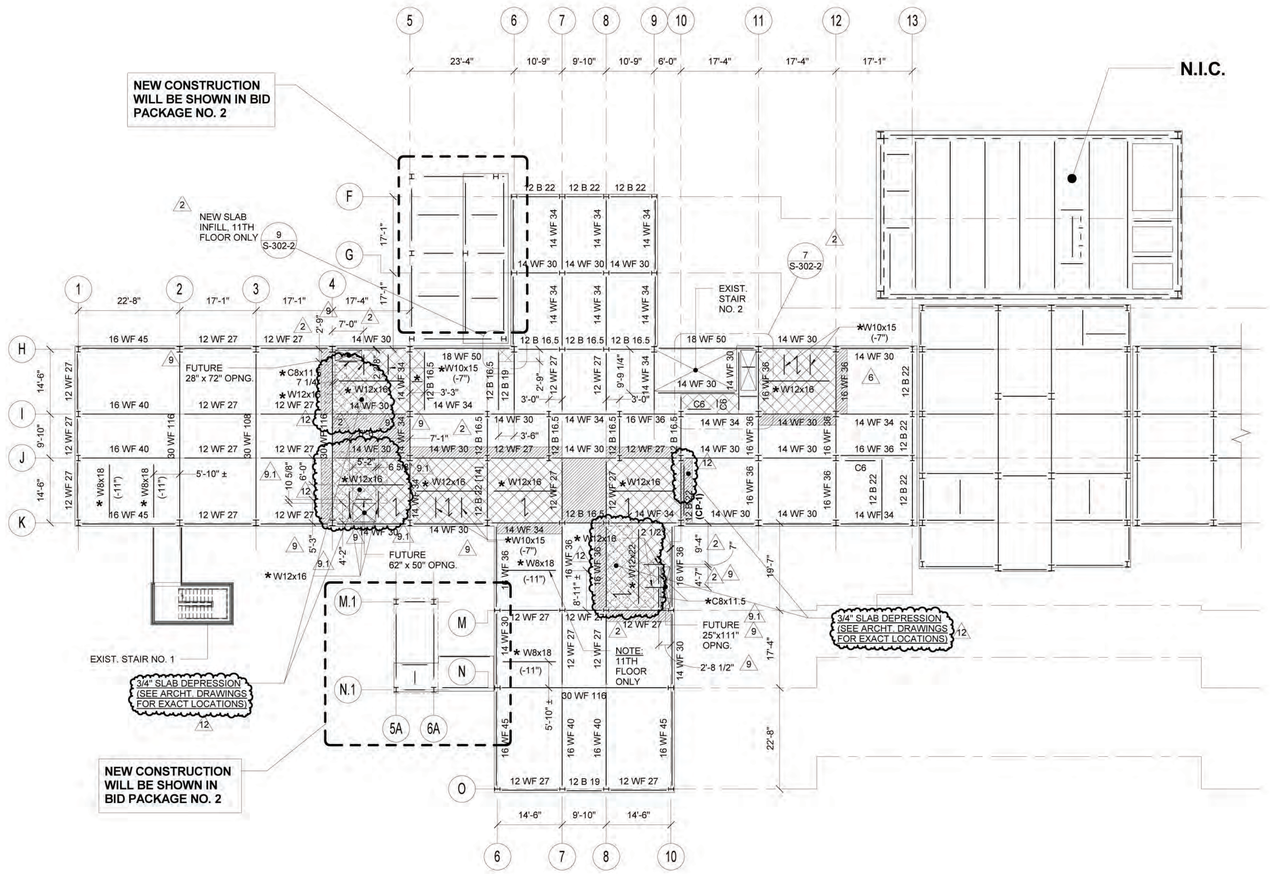

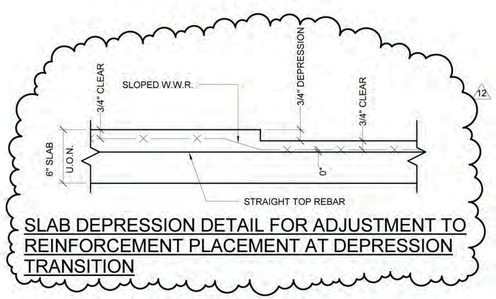

SLAB DEPRESSION DETAIL FOR ADJUSTMENT TO REINFORCEMENT PLACEMENT AT DEPRESSION TRANSITION

STRUCTURAL NINTH, TENTH AND ELEVENTH FLOOR FRAMING PLAN

NOTE:

1. 9TH FLOOR TOP OF CONCRETE FINISH FLOOR EL. +129.25' (U.O.N.)
   10TH FLOOR TOP OF CONCRETE FINISH FLOOR EL. +141.50' (U.O.N.)
   11TH FLOOR TOP OF CONCRETE FINISH FLOOR EL. +153.75' (U.O.N.)
2. NEW CONCRETE SLAB CONSTRUCTION IS 4" LIGHTWEIGHT CONCRETE REINFORCED WITH WWF6x6 W2.0xW2.0 OVER 2" COMPOSITE METAL DECK LOCK FLOOR 20GA BY LISD.
3. WORK ON THIS FLOOR IS LIMITED TO STRENGHTENING OF EXISTING CONCRETE FLOOR (U.O.N.). THE AREA OF WORK IS SHOWN ON THIS DRAWING AS A HATCHED AREA, SEE SHEET LEGEND. FOR THE FLOOR CONSTRUCTION IN THE AREA OF STRENGTHENING, SEE DETAILS 1, 2, 3, 7/S-301-2.
4. WHEN LOCATION OF NEW BEAM IS NOT SHOWN, PLACE IT IN THE MIDDLE OF A FRAMING BAY (BASED ON CENTERLINE OF COLUMNS), OR EQUAL SPACING.
5. TOP OF EXISTING STEEL ELEVATION 6" BELOW FINISH FLOOR ELEVATION, U.O.N.
6. SYMBOL (-11") INDICATES TOP OF NEW STEEL BEAM DISTANCE WITH REFERENCE TO FINISH FLOOR ELEVATION.
7. ALL EXISTING STEEL BEAMS ARE ENCASED IN CONCRETE. FOR NEW BEAM CONNECTION TO EXIST. BEAM, ENCASEMENT SHALL BE REMOVED LOCALLY AND PATCHED AFTER INSTALLATION.

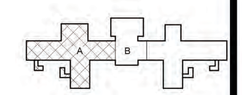

0 8' 16' 32'
SCALE: 1/16" = 1'-0"

REFERENCE ONLY FROM BID PACKAGE 1

NYS OFFICE OF GENERAL SERVICES
Serving New York
ANDREW M. CUOMO
Governor
ROANN M. DESTITO
Commissioner

CONSULTANTS:
RBSD ARCHITECTS P.C. | STV 100 Years
A Joint Venture
225 Park Avenue South
New York, New York 10003

WARNING:
THE ALTERATION OF THIS MATERIAL IN ANY WAY, UNLESS DONE UNDER THE DIRECTION OF A COMPARABLE PROFESSIONAL, I.E. ARCHITECT FOR AN ARCHITECT, ENGINEER FOR AN ENGINEER OR LANDSCAPE ARCHITECT FOR A LANDSCAPE ARCHITECT, IS A VIOLATION OF THE NEW YORK STATE EDUCATION LAW AND/OR REGULATIONS AND IS A CLASS 'A' MISDEMEANOR.

CONTRACT: CONSTRUCTION

TITLE: PHASE 1 WORK: DEMOLITION, ASBESTOS REMOVAL, STRENGTHEN FLOOR SLABS & REPLACE WINDOWS

LOCATION: MANHATTAN PSYCHIATRIC CENTER, BUILDING No. 102
600 EAST 125TH STREET WARDS ISLAND, NY 10035

CLIENT: NYS OFFICE OF MENTAL HEALTH

PROGRESS PRINT

MARK	DATE	DESCRIPTION
12	6-17-2015	BULLETIN NO. 12
9.1	4-29-2015	BULLETIN NO. 9.1
9	4-8-2015	BULLETIN NO. 9
6	3-9-2015	BULLETIN NO. 6
3	7-17-2014	ADDENDUM NO. 3
2	6-30-2014	ADDENDUM NO. 2

PROJECT NUMBER:	44579
DESIGNED BY:	MR
DRAWN BY:	CJL
FIELD CHECK:	ACC/JM
APPROVED:	ACC

SHEET TITLE: STRUCTURAL NINTH, TENTH AND ELEVENTH FLOOR FRAMING PLAN

BUILDING NUMBER: 102

DRAWING NUMBER: S-106-2

SHEET

6/12/2015 4:57:23 PM

TYPICAL FLOOR LEGEND

EXISTING FLOOR CONSTRUCTION TO REMAIN (SEE DEMOLITION PLANS FOR AREAS OF NEW NONSTRUCTURAL L.W. CONCRETE TOPPING AT PREVIOUSLY REMOVED CERAMIC AND QUARRY TILE)

3 — EXISTING FLOOR SLAB TO BE REPLACED WITH NEW FLOOR CONSTRUCTION (SEE DETAIL 1/S-301-2), U.O.N.

AREA OF REMOVED CONCRETE FLOOR FILL TO BE INFILLED WITH NEW REINFORCED L.W. CONCRETE (SEE DETAIL 3/S-301-2)

16 WF 36 — DENOTES EXISTING FLOOR BEAM TO REMAIN

** 16 WF 36 [...] — DENOTES EXISTING FLOOR BEAM TO REMAIN AND BE REINFORCED WITH WELDED SHEAR STUDS (REFER TO TYPICAL FLOOR RECONSTRUCTION DETAILS)

* W12x26 — * DENOTES NEW FLOOR BEAM UNDER SOLID CONC. SLAB OR CONC. JOISTS, SEE DETAILS 1 & 4/S-301-2, TOP OF STEEL ELEVATIONS IS 6" BELOW FINISH FLOOR ELEVATION, U.O.N.

DENOTES SPAN DIRECTION OF METAL DECK FOR NEW CONCRETE SLAB, SEE DETAIL 1/S-301-2

(WT-X) — DENOTES NEW WELDED WT REINFORCING MEMBER, SEE DETAIL 1/S-303-2

(CP-X) — DENOTES NEW WELDED REINFORCING COVER PLATE, SEE DETAIL 1/S-303-2

6, 9 — DENOTES OUTLINE OF FUTURE TYPICAL FLOOR OPENING TO BE SAW CUT FOR **BID PACKAGE NO. 2** IN NEW FLOOR CONSTRUCTION (REFER TO TYPICAL DETAIL 6/S-301-2)

NOTE: SEE DETAIL 1/S-301-2 FOR SUGGESTED SEQUENCE FOR NEW FLOOR CONSTRUCTION.

6, 9 — S — DENOTES FUTURE FLOOR OPENING AT BOTTOM OF MECH. SHAFT, OPENING TO BE SAW CUT FOR **BID PACKAGE NO. 2** IN NEW FLOOR CONSTRUCTION (REFER TO TYPICAL DETAIL 6/S-301-2)

DENOTES NEW DEPRESSED SLAB AREA (REFER TO ARCHITECTURAL DRAWINGS, AS-100 SERIES, FOR EXACT LOCATIONS AND SIZE)

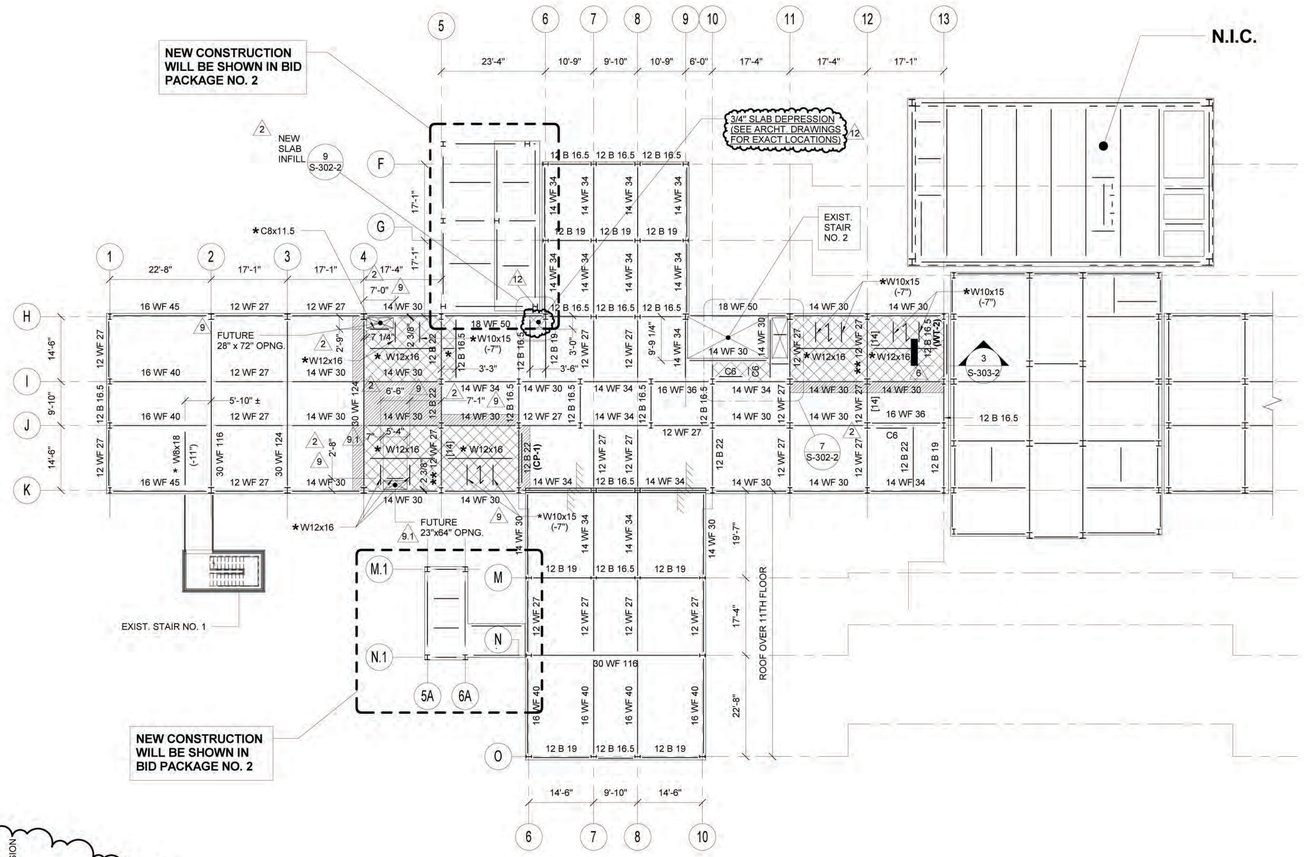

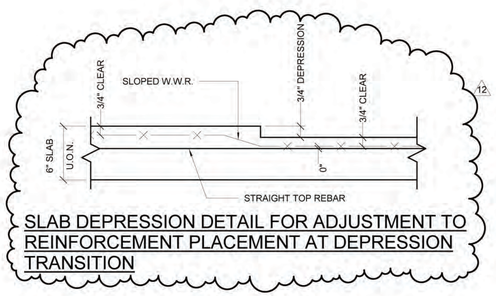

SLAB DEPRESSION DETAIL FOR ADJUSTMENT TO REINFORCEMENT PLACEMENT AT DEPRESSION TRANSITION

STRUCTURAL TWELFTH FLOOR FRAMING PLAN

NOTES:

1. TOP OF CONCRETE FINISH FLOOR EL. + 166.0' (U.O.N.)
2. NEW CONCRETE SLAB CONSTRUCTION IS 4" LIGHTWEIGHT CONCRETE REINFORCED WITH WWF6x6 W2.0xW2.0 OVER 2" COMPOSITE METAL DECK LOCK FLOOR 20GA BY USD.
3. WORK ON THIS FLOOR IS LIMITED TO STRENGHTENING OF EXISTING CONCRETE FLOOR (U.O.N.). THE AREA OF WORK IS SHOWN ON THIS DRAWING AS A HATCHED AREA, SEE SHEET LEGEND. FOR THE FLOOR CONSTRUCTION IN THE AREA OF STRENGTHENING, SEE DETAILS 1, 2, 3, 7/S-301-2.
4. WHEN LOCATION OF NEW BEAM IS NOT SHOWN, PLACE IT IN THE MIDDLE OF A FRAMING BAY (BASED ON CENTERLINE OF COLUMNS), OR EQUAL SPACING.
5. TOP OF EXISTING STEEL ELEVATION 6" BELOW FINISH FLOOR ELEVATION, U.O.N.
6. SYMBOL (-11") INDICATES TOP OF NEW STEEL BEAM DISTANCE WITH REFERENCE TO FINISH FLOOR ELEVATION.
7. ALL EXISTING STEEL BEAMS ARE ENCASED IN CONCRETE. FOR NEW BEAM CONNECTION TO EXIST. BEAM, ENCASEMENT SHALL BE REMOVED LOCALLY AND PATCHED AFTER INSTALLATION.

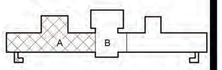

PROJECT NORTH

0 8' 16' 32'
SCALE: 1/16" = 1'-0"

REFERENCE ONLY FROM BID PACKAGE 1

NYS OFFICE OF GENERAL SERVICES
Serving New York
ANDREW M. CUOMO, Governor
ROANN M. DESTITO, Commissioner

CONSULTANTS:
RBSD ARCHITECTS P.C. | STV 100 Years
A Joint Venture
225 Park Avenue South
New York, New York 10003

WARNING:
THE ALTERATION OF THIS MATERIAL IN ANY WAY, UNLESS DONE UNDER THE DIRECTION OF A COMPARABLE PROFESSIONAL, I.E. ARCHITECT FOR AN ARCHITECT, ENGINEER FOR AN ENGINEER OR LANDSCAPE ARCHITECT FOR A LANDSCAPE ARCHITECT, IS A VIOLATION OF THE NEW YORK STATE EDUCATION LAW AND/OR REGULATIONS AND IS A CLASS 'A' MISDEMEANOR.

CONTRACT: CONSTRUCTION
TITLE: PHASE 1 WORK: DEMOLITION, ASBESTOS REMOVAL, STRENGTHEN FLOOR SLABS & REPLACE WINDOWS
LOCATION: MANHATTAN PSYCHIATRIC CENTER, BUILDING No. 102, 600 EAST 125TH STREET WARDS ISLAND, NY 10035
CLIENT: NYS OFFICE OF MENTAL HEALTH

PROGRESS PRINT

MARK	DATE	DESCRIPTION
12	6-17-2015	BULLETIN NO. 12
9.1	4-29-2015	BULLETIN NO. 9.1
9	4-8-2015	BULLETIN NO. 9
6	3-9-2015	BULLETIN NO. 6
3	7-17-2014	ADDENDUM NO. 3
2	6-30-2014	ADDENDUM NO. 2

PROJECT NUMBER:	44579
DESIGNED BY:	MR
DRAWN BY:	CJL
FIELD CHECK:	ACC/JM
APPROVED:	ACC

SHEET TITLE: STRUCTURAL TWELFTH FLOOR FRAMING PLAN

BUILDING NUMBER: 102
DRAWING NUMBER: S-107-2
SHEET

6/19/2015 4:33:27 PM

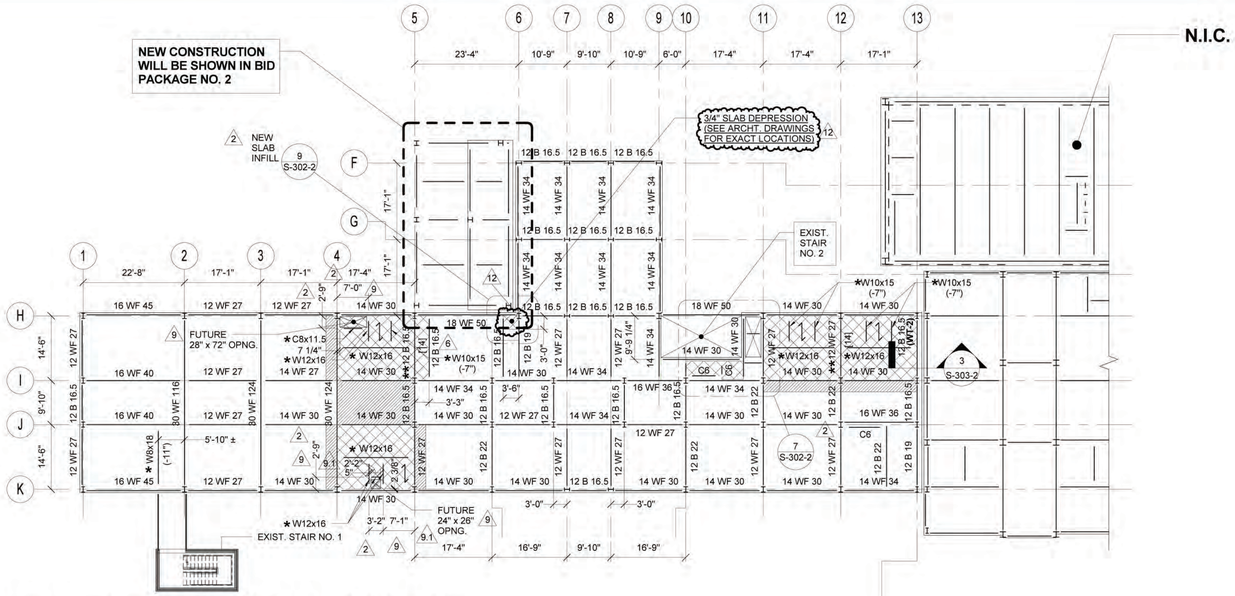

1 STRUCTURAL THIRTEENTH FLOOR FRAMING PLAN

1/16" = 1'-0"

NOTES:

1. TOP OF CONCRETE FINISH FLOOR EL. +178.25'
2. NEW CONCRETE SLAB CONSTRUCTION IS 4" LIGHTWEIGHT CONCRETE REINFORCED WITH WWF6x6 W2.0xW2.0 OVER 2" COMPOSITE METAL DECK LOCK FLOOR 20GA BY USD.
3. WORK ON THIS FLOOR IS LIMITED TO STRENGHTENING OF EXISTING CONCRETE FLOOR (U.O.N.). THE AREA OF WORK IS SHOWN ON THIS DRAWING AS A HATCHED AREA, SEE SHEET LEGEND. FOR THE FLOOR CONSTRUCTION IN THE AREA OF STRENGTHENING, SEE DETAILS 1, 2, 3, 7/S-301-2.
4. WHEN LOCATION OF NEW BEAM IS NOT SHOWN, PLACE IT IN THE MIDDLE OF A FRAMING BAY (BASED ON CENTERLINE OF COLUMNS), OR EQUAL SPACING.
5. TOP OF EXISTING STEEL ELEVATION 6" BELOW FINISH FLOOR ELEVATION, U.O.N.
6. SYMBOL (-11") INDICATES TOP OF NEW STEEL BEAM DISTANCE WITH REFERENCE TO FINISH FLOOR ELEVATION.
7. ALL EXISTING STEEL BEAMS ARE ENCASED IN CONCRETE. FOR NEW BEAM CONNECTION TO EXIST. BEAM, ENCASEMENT SHALL BE REMOVED LOCALLY AND PATCHED AFTER INSTALLATION.

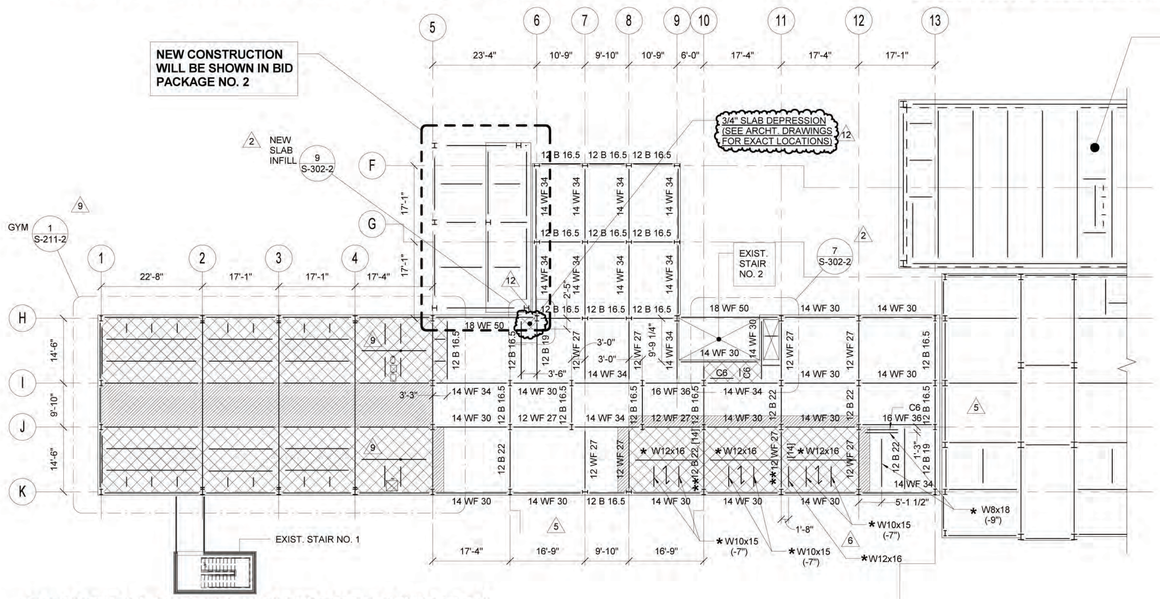

2 STRUCTURAL FOURTEENTH FLOOR FRAMING PLAN

1/16" = 1'-0"

NOTES:

1. TOP OF CONCRETE FINISH FLOOR EL. +190.50'
2. NEW CONCRETE SLAB CONSTRUCTION IS 4" LIGHTWEIGHT CONCRETE REINFORCED WITH WWF6x6 W2.0xW2.0 OVER 2" COMPOSITE METAL DECK LOCK FLOOR 20GA BY USD.
3. WORK ON THIS FLOOR IS LIMITED TO STRENGHTENING OF EXISTING CONCRETE FLOOR (U.O.N.). THE AREA OF WORK IS SHOWN ON THIS DRAWING AS A HATCHED AREA, SEE SHEET LEGEND. FOR THE FLOOR CONSTRUCTION IN THE AREA OF STRENGTHENING, SEE DETAILS 1, 2, 3, 7/S-301-2.
4. WHEN LOCATION OF NEW BEAM IS NOT SHOWN, PLACE IT IN THE MIDDLE OF A FRAMING BAY (BASED ON CENTERLINE OF COLUMNS), OR EQUAL SPACING.
5. TOP OF EXISTING STEEL ELEVATION 6" BELOW FINISH FLOOR ELEVATION, U.O.N.
6. SYMBOL (-11") INDICATES TOP OF NEW STEEL BEAM DISTANCE WITH REFERENCE TO FINISH FLOOR ELEVATION.
7. ALL EXISTING STEEL BEAMS ARE ENCASED IN CONCRETE. FOR NEW BEAM CONNECTION TO EXIST. BEAM, ENCASEMENT SHALL BE REMOVED LOCALLY AND PATCHED AFTER INSTALLATION.

TYPICAL FLOOR LEGEND

- EXISTING FLOOR CONSTRUCTION TO REMAIN (SEE DEMOLITION PLANS FOR AREAS OF NEW NONSTRUCTURAL L.W. CONCRETE TOPPING AT PREVIOUSLY REMOVED CERAMIC AND QUARRY TILE)
- 3 — EXISTING FLOOR SLAB TO BE REPLACED WITH NEW FLOOR CONSTRUCTION (SEE DETAIL 1/S-301-2), U.O.N.
- AREA OF REMOVED CONCRETE FLOOR FILL TO BE INFILLED WITH NEW REINFORCED L.W. CONCRETE (SEE DETAIL 3/S-301-2)
- 16 WF 36 — DENOTES EXISTING FLOOR BEAM TO REMAIN
- ** 16 WF 36 [...] — DENOTES EXISTING FLOOR BEAM TO REMAIN AND BE REINFORCED WITH WELDED SHEAR STUDS (REFER TO TYPICAL FLOOR RECONSTRUCTION DETAILS)
- * W12x26 — * DENOTES NEW FLOOR BEAM UNDER SOLID CONC. SLAB OR CONC. JOISTS, SEE DETAILS 1 & 4/S-301-2, TOP OF STEEL ELEVATIONS IS 6" BELOW FINISH FLOOR ELEVATION, U.O.N.
- DENOTES SPAN DIRECTION OF METAL DECK FOR NEW CONCRETE SLAB, SEE DETAIL 1/S-301-2
- (WT-X) — DENOTES NEW WELDED WT REINFORCING MEMBER, SEE DETAIL 1/S-303-2
- (CP-X) — DENOTES NEW WELDED REINFORCING COVER PLATE, SEE DETAIL 1/S-303-2
- 6, 9 — DENOTES OUTLINE OF FUTURE TYPICAL FLOOR OPENING TO BE SAW CUT FOR **BID PACKAGE NO. 2** IN NEW FLOOR CONSTRUCTION (REFER TO TYPICAL DETAIL 6/S-301-2)

NOTE: SEE DETAIL 1/S-301-2 FOR SUGGESTED SEQUENCE FOR NEW FLOOR CONSTRUCTION.

- 6, 9 — S — DENOTES FUTURE FLOOR OPENING AT BOTTOM OF MECH. SHAFT, OPENING TO BE SAW CUT FOR **BID PACKAGE NO. 2** IN NEW FLOOR CONSTRUCTION (REFER TO TYPICAL DETAIL 6/S-301-2)
- DENOTES NEW DEPRESSED SLAB AREA (REFER TO ARCHITECTURAL DRAWINGS, AS-100 SERIES, FOR EXACT LOCATIONS AND SIZE)

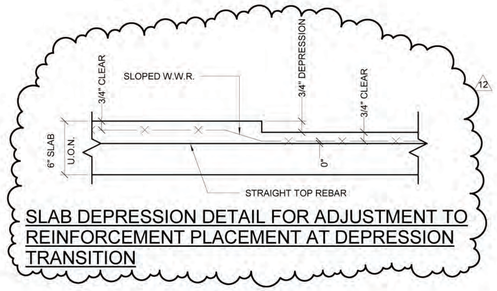

SLAB DEPRESSION DETAIL FOR ADJUSTMENT TO REINFORCEMENT PLACEMENT AT DEPRESSION TRANSITION

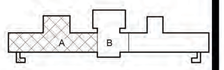

0 8' 16' 32'

SCALE: 1/16" = 1'-0"

REFERENCE ONLY FROM BID PACKAGE 1

NYS OFFICE OF GENERAL SERVICES
Serving New York
ANDREW M. CUOMO
Governor
ROANN M. DESTITO
Commissioner

CONSULTANTS:
RBSD ARCHITECTS P.C. | STV 100 Years
A Joint Venture
225 Park Avenue South
New York, New York 10003

WARNING:
THE ALTERATION OF THIS MATERIAL IN ANY WAY, UNLESS DONE UNDER THE DIRECTION OF A COMPARABLE PROFESSIONAL, I.E. ARCHITECT FOR AN ARCHITECT, ENGINEER FOR AN ENGINEER OR LANDSCAPE ARCHITECT FOR A LANDSCAPE ARCHITECT, IS A VIOLATION OF THE NEW YORK STATE EDUCATION LAW AND/OR REGULATIONS AND IS A CLASS 'A' MISDEMEANOR.

CONTRACT: CONSTRUCTION

TITLE: PHASE 1 WORK: DEMOLITION, ASBESTOS REMOVAL, STRENGTHEN FLOOR SLABS & REPLACE WINDOWS

LOCATION: MANHATTAN PSYCHIATRIC CENTER, BUILDING No. 102, 600 EAST 125TH STREET WARDS ISLAND, NY 10035

CLIENT: NYS OFFICE OF MENTAL HEALTH

PROGRESS PRINT

MARK	DATE	DESCRIPTION
12	6-17-2015	BULLETIN NO. 12
9.1	4-29-2015	BULLETIN NO. 9.1
9	4-8-2015	BULLETIN NO. 9
6	3-9-2015	BULLETIN NO. 6
5	2-13-2015	BULLETIN NO. 5
3	7-17-2014	ADDENDUM NO. 3
2	6-30-2014	ADDENDUM NO. 2

PROJECT NUMBER:	44579
DESIGNED BY:	MR
DRAWN BY:	CJL
FIELD CHECK:	ACC/JM
APPROVED:	ACC

SHEET TITLE: STRUCTURAL THIRTEENTH AND FOURTEENTH FLOOR FRAMING PLANS

BUILDING NUMBER: 102

DRAWING NUMBER: S-108-2

SHEET

6/19/2015 4:33:28 PM

GENERAL

G-001	TITLE SHEET
G-002	LIST OF DRAWING
G-003	SITE LOGISTIC PLAN
G-004	HOIST LAYOUT PLAN
G-005	SYMBOLS, ABBREVIATIONS, GENERAL NOTES
G-006	STANDARD ABBREVIATIONS & GENERAL SYMBOLS
G-007	EGRESS PLAN DURING BASEMENT DEMOLITION

STRUCTURE

S-001	GENERAL STRUCTURAL NOTES I
S-002	GENERAL STRUCTURAL NOTES II
S-003	STRUCTURAL LOADING CRITERIA, LEGEND, AND ABBREVIATIONS
S-100-2	STRUCTURAL BASEMENT FLOOR FRAMING PLAN
S-101-2	STRUCTURAL FIRST FLOOR FRAMING PLAN
S-102-2	STRUCTURAL SECOND FLOOR FRAMING PLAN
S-103-2	STRUCTURAL THIRD FLOOR FRAMING PLAN
S-104-2	STRUCTURAL FOURTH AND FIFTH FLOOR FRAMING PLAN
S-105-2	STRUCTURAL SIXTH, SEVENTH, AND EIGHTH FLOOR FRAMING PLAN
S-106-2	STRUCTURAL NINTH, TENTH AND ELEVENTH FLOOR FRAMING PLAN
S-107-2	STRUCTURAL TWELFTH FLOOR FRAMING PLAN
S-108-2	STRUCTURAL THIRTEENTH AND FOURTEENTH FLOOR FRAMING PLANS
S-109-2	STRUCTURAL FIFTEENTH AND SIXTEENTH FLOOR FRAMING PLANS
S-211-2	GYM FRAMING PLANS
S-212-2	GYM FRAMING ELEVATIONS AND DETAILS
S-213-2	GYM FRAMING SECTIONS AND DETAILS
S-214-2	GYM FRAMING SECTIONS AND DETAILS II
S-301-2	TYPICAL FLOOR RECONSTRUCTION DETAILS I
S-302-2	TYPICAL FLOOR RECONSTRUCTION DETAILS II
S-303-2	TYPICAL FLOOR RECONSTRUCTION DETAILS III
SD-001	DEMOLITION NOTES AND DETAILS I
SD-002	DEMOLITION NOTES AND DETAILS II
SD-100-2	STRUCTURAL BASEMENT FLOOR DEMOLITION PLAN
SD-101-2	STRUCTURAL FIRST FLOOR DEMOLITION PLAN
SD-102-2	STRUCTURAL SECOND FLOOR DEMOLITION PLAN
SD-103-2	STRUCTURAL THIRD FLOOR DEMOLITION PLAN
SD-104-2	STRUCTURAL FOURTH AND FIFTH FLOOR DEMOLITION PLAN
SD-105-2	STRUCTURAL SIXTH, SEVENTH AND EIGHTH FLOOR DEMOLITION PLAN
SD-106-2	STRUCTURAL NINTH, TENTH, AND ELEVENTH FLOOR DEMOLITION PLAN
SD-107-2	STRUCTURAL TWELFTH FLOOR DEMOLITION PLAN
SD-108-2	STRUCTURAL THIRTEENTH AND FOURTEENTH FLOOR DEMOLITION PLANS
SD-109-2	STRUCTURAL FIFTEENTH AND SIXTEENTH FLOOR DEMOLITION PLANS
SD-211-2	GYM DEMOLITION PLANS
SD-231-2	STAIR NO. 12 DEMOLITION PLANS

DEMOLITION & WINDOW INSTALLATION

AD-100-2	BASEMENT DEMOLITION PLAN
AD-100-2A	BASEMENT DEMOLITION PLAN, PART "A"
AD-100-2B	BASEMENT DEMOLITION PLAN, PART "B"
AD-100-2C	BASEMENT DEMOLITION PLAN, PART "C"
AD-100-2D	BASEMENT DEMOLITION PLAN, PART "D"
AD-100-2E	BASEMENT DEMOLITION PLAN, PART "E"
AD-101-2	FIRST FLOOR DEMOLITION PLAN
AD-101-2A	FIRST FLOOR DEMOLITION PLAN, PART "A"
AD-101-2B	FIRST FLOOR DEMOLITION PLAN, PART "B"
AD-101-2C	FIRST FLOOR DEMOLITION PLAN, PART "C"
AD-101-2D	FIRST FLOOR DEMOLITION PLAN, PART "D"
AD-101-2E	FIRST FLOOR DEMOLITION PLAN, PART "E"
AD-102-2	SECOND FLOOR DEMOLITION PLAN
AD-102-2A	SECOND FLOOR DEMOLITION PLAN, PART "A"
AD-102-2B	SECOND FLOOR DEMOLITION PLAN, PART "B"
AD-102-2C	SECOND FLOOR DEMOLITION PLAN, PART "C"
AD-102-2D	SECOND FLOOR DEMOLITION PLAN, PART "D"
AD-103-2	THIRD FLOOR DEMOLITION PLAN
AD-103-2A	THIRD FLOOR DEMOLITION PLAN, PART "A"
AD-103-2B	THIRD FLOOR DEMOLITION PLAN, PART "B"
AD-103-2C	THIRD FLOOR DEMOLITION PLAN, PART "C"
AD-104-2	FOURTH FLOOR DEMOLITION PLAN
AD-105-2	FIFTH FLOOR DEMOLITION PLAN
AD-106-2	SIXTH FLOOR DEMOLITION PLAN
AD-107-2	SEVENTH FLOOR DEMOLITION PLAN
AD-108-2	EIGHTH FLOOR DEMOLITION PLAN
AD-109-2	NINTH FLOOR DEMOLITION PLAN
AD-110-2	TENTH FLOOR DEMOLITION PLAN
AD-111-2	ELEVENTH FLOOR DEMOLITION PLAN
AD-112-2	TWELFTH FLOOR DEMOLITION PLAN
AD-113-2	THIRTEENTH FLOOR DEMOLITION PLAN
AD-114-2	FOURTEENTH DEMOLITION FLOOR PLAN
AD-115-2	FIFTEENTH FLOOR DEMOLITION PLAN

DEMOLITION & WINDOW INSTALLATION

AD-116-2	SIXTEENTH FLOOR DEMOLITION PLAN
AD-300-2	BASEMENT FLOOR SCHLUTER SYSTEM DEPRESSION PLAN
AD-301-2	FIRST FLOOR SCHLUTER SYSTEM DEPRESSION PLAN
AD-302-2	SECOND FLOOR SCHLUTER SYSTEM DEPRESSION PLAN
AD-303-2	THIRD TO FIFTH FLOOR SCHLUTER SYSTEM DEPRESSION PLAN
AD-304-2	SIXTH TO ELEVENTH SCHLUTER SYSTEM DEPRESSION PLAN
AD-305-2	TWELFTH TO FOURTEENTH FLOOR SCHLUTER SYSTEM DEPRESSION PLAN
AD-400-2	PARTIAL BLDG. ELEVATION - WINDOW REMOVAL
AD-401-2	PARTIAL BLDG. ELEVATION - WINDOW REMOVAL
AD-402-2	PARTIAL BLDG. ELEVATION - WINDOW REMOVAL
AD-403-2	PARTIAL BLDG. ELEVATION - WINDOW REMOVAL
AD-800	DEMOLITION DETAILS
AD-800.1	DEMOLITION DETAILS
WI-100-2	BASEMENT WINDOW INSTALLATION PLAN
WI-101-2	FIRST FLOOR WINDOW INSTALLATION PLAN
WI-102-2	SECOND FLOOR WINDOW INSTALLATION PLAN
WI-400-2	PARTIAL BLDG. ELEVATION - WINDOW INSTALLATION
WI-401-2	PARTIAL BLDG. ELEVATION - WINDOW INSTALLATION
WI-402-2	PARTIAL BLDG. ELEVATION - WINDOW INSTALLATION
WI-403-2	PARTIAL BLDG. ELEVATION - WINDOW INSTALLATION
WI-801	WINDOW DETAILS
WI-802	WINDOW DETAILS

HAZARDOUS MATERIALS

H-100-2A	GENERAL NOTES AND TABLE BASEMENT PLAN
H-100-2B	HAZARDOUS MATERIAL BASEMENT PLAN
H-100-2A-1	GENERAL NOTES AND TABLE BASEMENT PLAN 102/103 CONNECTOR
H-100-2B-1	HAZARDOUS MATERIAL BASEMENT APPENDAGE PLAN
H-101-2A	GENERAL NOTES AND TABLE FIRST FLOOR PLAN
H-101-2B	HAZARDOUS MATERIALS FIRST FLOOR PLAN
H-102-2A	GENERAL NOTES AND TABLE SECOND FLOOR PLAN
H-102-2B	HAZARDOUS MATERIAL SECOND FLOOR PLAN
H-200	WINDOW SCHEDULE

MECHANICAL

MD-001	HVAC DEMOLITION DETAILS, LEGENDS & GENERAL NOTES
MD-002	HVAC DEMOLITION SYMBOLS AND LEGENDS
MD-099-2	HVAC DEMOLITION WORK SUB-BASEMENT PLAN
MD-100-2	HVAC DEMOLITION WORK BASEMENT PLAN
MD-101-2	HVAC DEMOLITION WORK FIRST FLOOR PLAN
MD-102-2	HVAC DEMOLITION WORK SECOND FLOOR PLAN
MD-103-2	HVAC DEMOLITION WORK THIRD FLOOR PLAN
MD-104-2	HVAC DEMOLITION WORK FOURTH FLOOR PLAN
MD-105-2	HVAC DEMOLITION WORK FIFTH FLOOR PLAN
MD-106-2	HVAC DEMOLITION WORK SIXTH FLOOR PLAN
MD-107-2	HVAC DEMOLITION WORK SEVENTH FLOOR PLAN
MD-108-2	HVAC DEMOLITION WORK EIGHTH FLOOR PLAN
MD-109-2	HVAC DEMOLITION WORK NINTH FLOOR PLAN
MD-110-2	HVAC DEMOLITION WORK TENTH FLOOR PLAN
MD-111-2	HVAC DEMOLITION WORK ELEVENTH FLOOR PLAN
MD-112-2	HVAC DEMOLITION WORK TWELFTH FLOOR PLAN
MD-113-2	HVAC DEMOLITION WORK THIRTEENTH FLOOR PLAN
MD-114-2	HVAC DEMOLITION WORK FOURTEENTH FLOOR PLAN
MD-115-2	HVAC DEMOLITION WORK FIFTEENTH FLOOR PLAN
MD-116-2	HVAC DEMOLITION WORK SIXTEENTH FLOOR PLAN
MD-117-2	HVAC DEMOLITION WORK SEVENTEENTH FLOOR PLAN
MD-118-2	HVAC DEMOLITION WORK EIGHTEENTH FLOOR PLAN
MPH-001	HVAC TEMPORARY WORK SPECIFICATIONS
MPH-100-2	HVAC TEMPORARY WORK BASEMENT PLAN
MPH-501-2	HVAC TEMPORARY WORK DETAILS
MPH-601-2	HVAC TEMPORARY WORK SCHEDULES & DIAGRAMS

PLUMBING

PD-001-2	PLUMBING DEMOLITION NOTES, ABBREVIATIONS & SYMBOLS
PD-099-2A	PLUMBING DEMOLITION SUB-BASEMENT DRAINAGE PLAN
PD-099-2B	PLUMBING DEMOLITION SUB-BASEMENT WATER PLAN
PD-100-2	PLUMBING DEMOLITION BASEMENT PLAN
PD-101-2	PLUMBING DEMOLITION FIRST FLOOR PLAN
PD-102-2	PLUMBING DEMOLITION SECOND FLOOR PLAN
PD-103-2	PLUMBING DEMOLITION THIRD FLOOR PLAN
PD-104-2	PLUMBING DEMOLITION FOURTH FLOOR PLAN
PD-105-2	PLUMBING DEMOLITION FIFTH FLOOR PLAN
PD-106-2	PLUMBING DEMOLITION SIXTH FLOOR PLAN
PD-107-2	PLUMBING DEMOLITION SEVENTH FLOOR PLAN
PD-108-2	PLUMBING DEMOLITION EIGHTH FLOOR PLAN
PD-109-2	PLUMBING DEMOLITION NINTH FLOOR PLAN
PD-110-2	PLUMBING DEMOLITION TENTH FLOOR PLAN
PD-111-2	PLUMBING DEMOLITION ELEVENTH FLOOR PLAN
PD-112-2	PLUMBING DEMOLITION TWELFTH FLOOR PLAN
PD-113-2	PLUMBING DEMOLITION THIRTEENTH FLOOR PLAN
PD-114-2	PLUMBING DEMOLITION FOURTEENTH FLOOR PLAN
PD-115-2	PLUMBING DEMOLITION FIFTEENTH FLOOR PLAN
PD-116-2	PLUMBING DEMOLITION SIXTEENTH FLOOR PLAN

FIRE PROTECTION

FPD-100-2	FIRE PROTECTION BASEMENT DEMOLITION PLAN
FPD-101-2	FIRE PROTECTION FIRST FLOOR DEMOLITION PLAN
FPD-102-2	FIRE PROTECTION SECOND FLOOR DEMOLITION PLAN
FPD-111-2	FIRE PROTECTION ELEVENTH FLOOR DEMOLITION PLAN
FPD-112-2	FIRE PROTECTION TWELFTH FLOOR DEMOLITION PLAN
FPD-113-2	FIRE PROTECTION THIRTEENTH FLOOR DEMOLITION PLAN
FPD-114-2	FIRE PROTECTION FOURTEENTH FLOOR DEMOLITION PLAN
FPD-115-2	FIRE PROTECTION FIFTEENTH FLOOR DEMOLITION PLAN
FPD-116-2	FIRE PROTECTION SIXTEENTH FLOOR DEMOLITION PLAN
FPD-117-2	FIRE PROTECTION EIGHTEENTH FLOOR DEMOLITION PLAN

ELECTRICAL

ED-001	ELECTRICAL DEMOLITION SYMBOL LIST, NOTES AND ABBREVIATIONS
ED-100-2	ELECTRICAL BASEMENT DEMOLITION PLAN
EPH-100-2	ELECTRICAL BASEMENT TEMPORARY WORK PLAN
ED-101-2	ELECTRICAL FIRST FLOOR DEMOLITION & TEMPORARY WORK PLAN
ED-102-2	ELECTRICAL SECOND FLOOR DEMOLITION & TEMPORARY WORK PLAN
ED-103-2	ELECTRICAL THIRD FLOOR DEMOLITION & TEMPORARY WORK PLAN
ED-104-2	ELECTRICAL FOURTH FLOOR DEMOLITION & TEMPORARY WORK PLAN
ED-105-2	ELECTRICAL FIFTH FLOOR DEMOLITION & TEMPORARY WORK PLAN
ED-106-2	ELECTRICAL SIXTH FLOOR DEMOLITION & TEMPORARY WORK PLAN
ED-107-2	ELECTRICAL SEVENTH FLOOR DEMOLITION & TEMPORARY WORK PLAN
ED-108-2	ELECTRICAL EIGHTH FLOOR DEMOLITION & TEMPORARY WORK PLAN
ED-109-2	ELECTRICAL NINTH FLOOR DEMOLITION & TEMPORARY WORK PLAN
ED-110-2	ELECTRICAL TENTH FLOOR DEMOLITION & TEMPORARY WORK PLAN
ED-111-2	ELECTRICAL ELEVENTH FLOOR DEMOLITION & TEMPORARY WORK PLAN
ED-112-2	ELECTRICAL TWELFTH FLOOR DEMOLITION & TEMPORARY WORK PLAN
ED-113-2	ELECTRICAL THIRTEENTH DEMOLITION & TEMPORARY WORK PLAN
ED-114-2	ELECTRICAL FOURTEENTH FLOOR DEMOLITION & TEMPORARY WORK PLAN
ED-115-2	ELECTRICAL FIFTEENTH FLOOR DEMOLITION & TEMPORARY WORK PLAN
ED-116-2	ELECTRICAL SIXTEENTH FLOOR DEMOLITION & TEMPORARY WORK PLAN
ED-300	ELECTRICAL TEMPORARY RISER DIAGRAM

FIRE ALARM

FAD-100-2	BASEMENT FIRE ALARM DEMOLITION PLAN

REFERENCE DRAWINGS (FROM 1997 DOCUMENTS)

P-4 FIRST FLOOR PLAN SIDE "B"
P-6 SECOND FLOOR PLAN SIDE "B"
P-28 SANITARY RISER DIAGRAM SIDE "A" & "B"

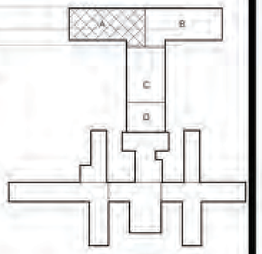

N

0 8' 16' 32'
SCALE

REFERENCE ONLY FROM BID PACKAGE 1

NEW YORK STATE OF OPPORTUNITY. Office of General Services

DESIGN & CONSTRUCTION

CONSULTANTS:

RBSD ARCHITECTS P.C. | STV 100 Years

A Joint Venture
225 Park Avenue South
New York, New York 10003

WARNING:
THE ALTERATION OF THIS MATERIAL IN ANY WAY, UNLESS DONE UNDER THE DIRECTION OF A COMPARABLE PROFESSIONAL, I.E. ARCHITECT FOR AN ARCHITECT, ENGINEER FOR AN ENGINEER OR LANDSCAPE ARCHITECT FOR A LANDSCAPE ARCHITECT, IS A VIOLATION OF THE NEW YORK STATE EDUCATION LAW AND/OR REGULATIONS AND IS A CLASS 'A' MISDEMEANOR.

CONTRACT: CONSTRUCTION

TITLE: PHASE 1 WORK
DEMOLITION, ASBESTOS REMOVAL
STRENGTHEN FLOOR SLABS & REPLACE WINDOWS

LOCATION: BUILDING No. 102
MANHATTAN FORENSIC RELOCATION
600 EAST 125TH STREET WARDS ISLAND, NY10035

CLIENT: NYS OFFICE OF MENTAL HEALTH

MARK	DATE	DESCRIPTION
1	6-17-2015	BULLETIN #12

PROJECT NUMBER: 44579
DESIGNED BY: MAK / WW
DRAWN BY: LR / LM / WW / JS / JM / DF / YB / YK
FIELD CHECK: LR / MA / DS / JM
APPROVED: WS / MAK / LF

SHEET TITLE: LIST OF DRAWING

BUILDING NUMBER: 106
DRAWING NUMBER: G-002
SHEET

6/23/2015 10:32:00 AM

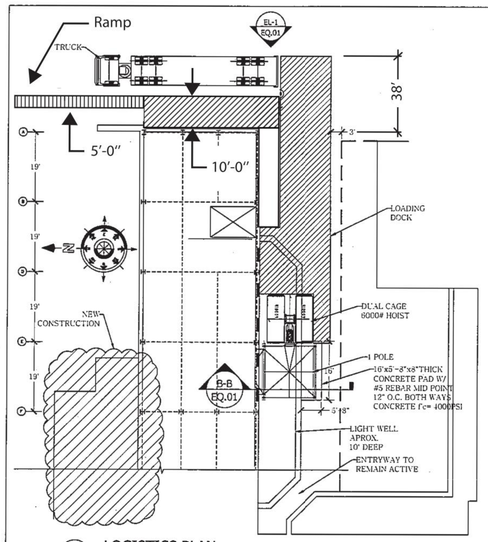

1 LOGISTICS PLAN
1/16"=1'-0"

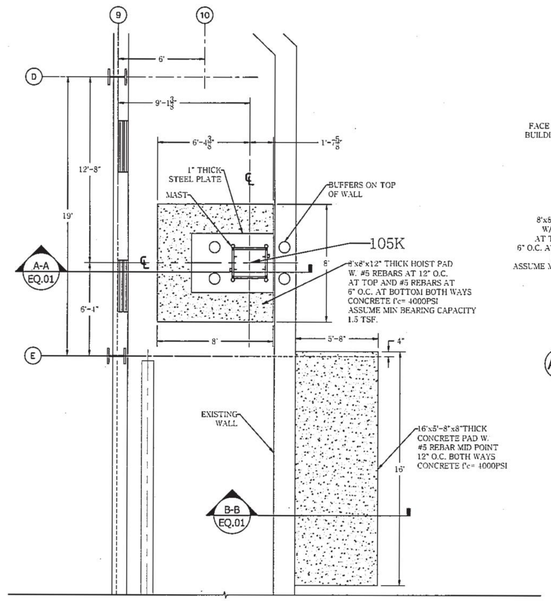

2 HOIST PAD PLAN
1/4"=1'-0"

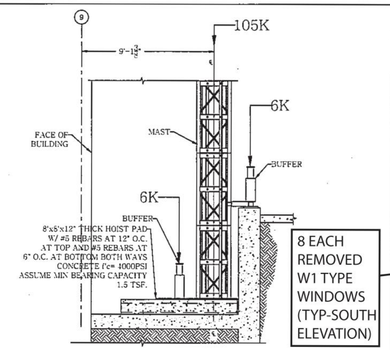

A-A HOIST PAD SECTION
1/4"=1'-0"

HOIST TIE SCHEDULE	
#1	2ND FLOOR
#2	4TH FLOOR
#3	6TH FLOOR
#4	8TH FLOOR
#5	10TH FLOOR
#6	12TH FLOOR
#7	14TH FLOOR
#8	16TH FLOOR

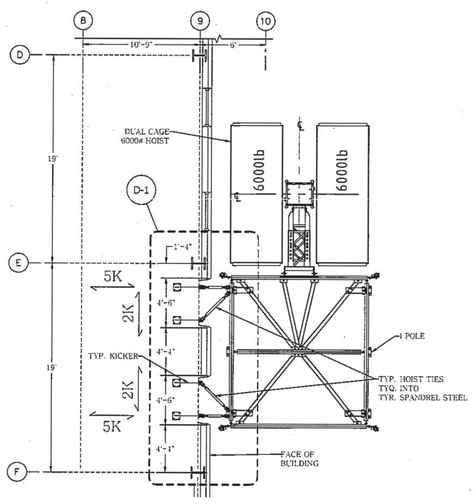

3 ENALRGED PLAN AT 2ND FLOOR
3/16"=1'-0"

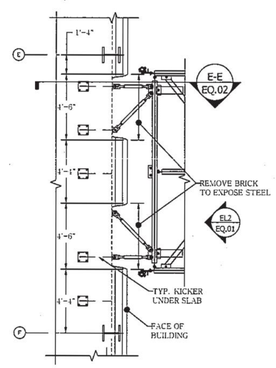

D-1 ENLARGED DETAIL
1/4"=1'-0"

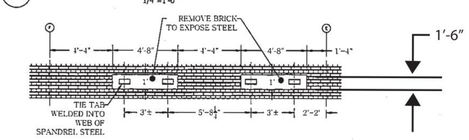

EL2 ENLARGED ELEVATION AT 2ND FLOOR
1/4"=1'-0"

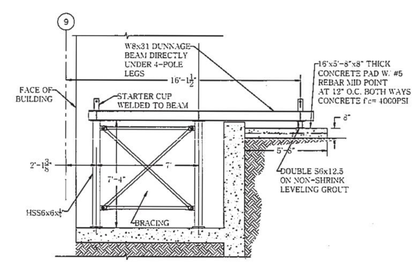

B-B SECTION AT BASE OF 4-POLE
1/4"=1'-0"

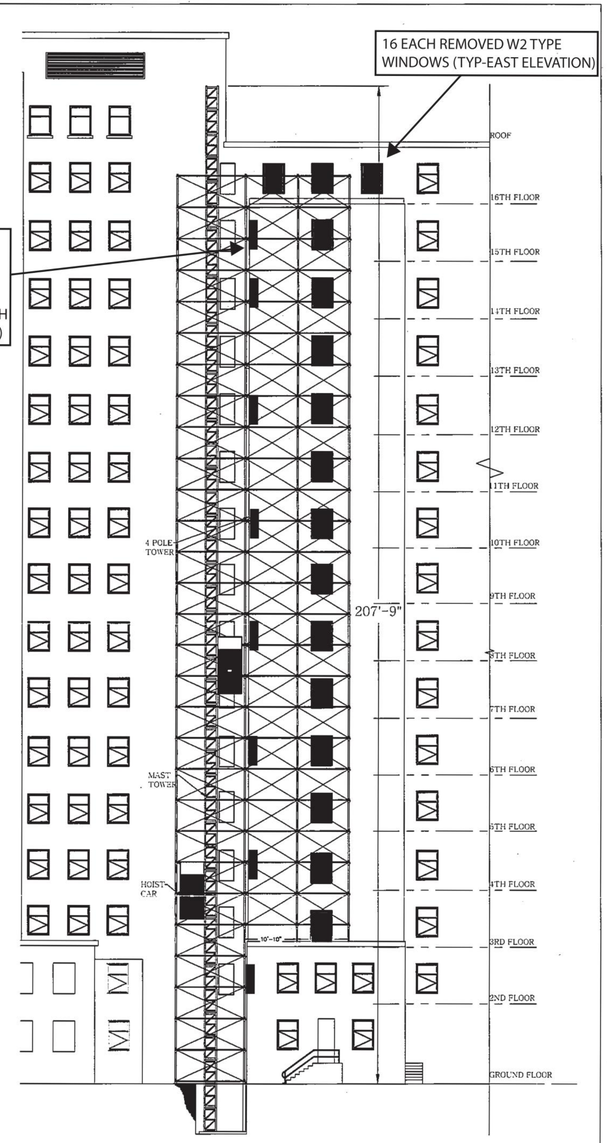

EL1 HOIST ELEVATION
N.T.S.

REV#1:-
DUNNAGE DETAILS AT ROOF

SAFWAY Atlantic
700 COMMERCIAL AVENUE
CARLSTADT, NJ 07072
TEL: 201 636 5500
FAX: 201 636 5542

SEAL & SIGNATURE

PROJECT: 600 EAST 125TH STREET BUILDING NO 102	DATE: 11.13.14
	PROJECT NO:—
TITLE: HOIST PLAN	DWG BY: ANG
	CHK BY: GK
CLIENT: — CAD FILE NO: —	DWG NO: EQ-001.00
	1 OF 2

ADDENDUM DRAWING 09/24/2015

NEW YORK STATE OF OPPORTUNITY. Office of General Services
DESIGN & CONSTRUCTION

CONSULTANTS:

WARNING:
THE ALTERATION OF THIS MATERIAL IN ANY WAY, UNLESS DONE UNDER THE DIRECTION OF A COMPARABLE PROFESSIONAL, I.E. ARCHITECT FOR AN ARCHITECT, ENGINEER FOR AN ENGINEER OR LANDSCAPE ARCHITECT FOR A LANDSCAPE ARCHITECT, IS A VIOLATION OF THE NEW YORK STATE EDUCATION LAW AND/OR REGULATIONS AND IS A CLASS 'A' MISDEMEANOR.

CONTRACT: CONSTRUCTION

TITLE: MAJOR BUILDING RENOVATION FOR THE MANHATTAN FORENSIC RELOCATION

LOCATION: NYS OFFICE OF MENTAL HEALTH MANHATTAN PSYCHIATRIC CENTER WARDS ISLAND, NY

CLIENT: NYS OFFICE OF MENTAL HEALTH

MARK	DATE	DESCRIPTION
8	09/24/2015	ADDENDUM 8

PROJECT NUMBER:	44578
DESIGNED BY:	JM
DRAWN BY:	MG
FIELD CHECK:	NA
APPROVED:	NA

SHEET TITLE: HOIST PLAN

BUILDING NUMBER:

DRAWING NUMBER: CS-201

SHEET OF

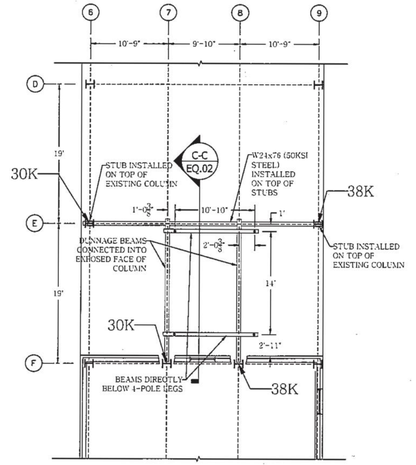

4 PLAN OF DUNNAGE AT 3RD FLOOR
1/8"=1'-0"

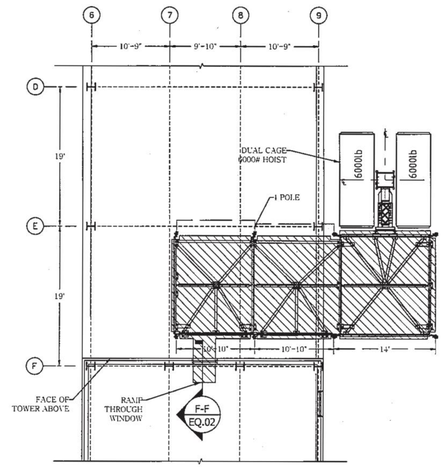

5 PLAN OF HOIST AT 3RD FLOOR
1/8"=1'-0"

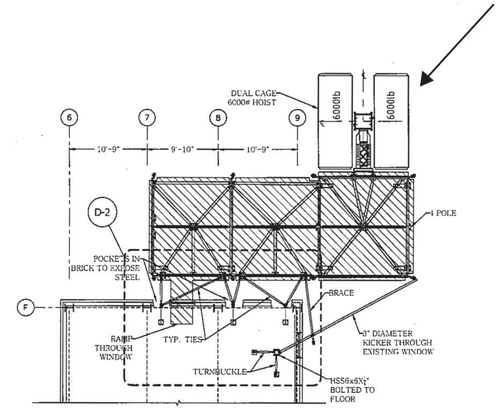

6 PLAN OF HOIST AT 4TH- ROOF
1/8"=1'-0"

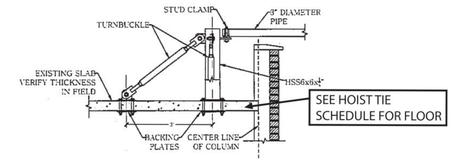

D-D SECTION AT KICKER TIE THROUGH WINDOW
1/2"=1'-0"

4TH FLOOR TO ROOF

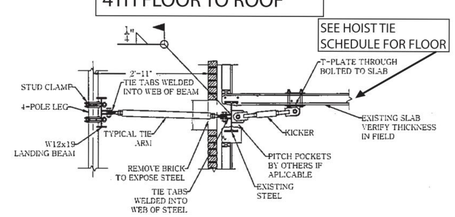

E-E SECTION AT TYP. TIE - 4TH - 16TH
1/2"=1'-0"

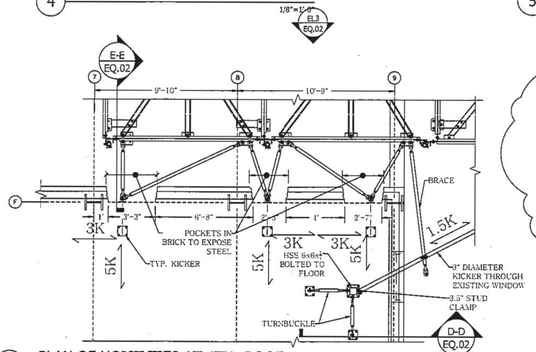

D2 PLAN OF HOIST TIES AT 4TH- ROOF
1/4"=1'-0"

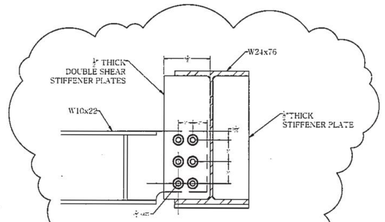

D-4 ENLARGED DETAIL
1/2"=1'-0"

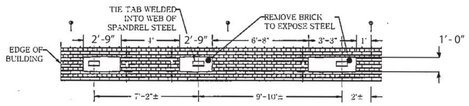

EL3 ENLARGED ELEVATION AT POCKETS- 4TH- 16TH
1/4"=1'-0"

SEE HOIST TIE SCHEDULE

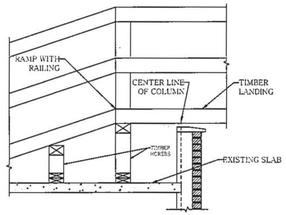

F-F SECTION AT RAMP THROUGH WINDOW
1/2"=1'-0"

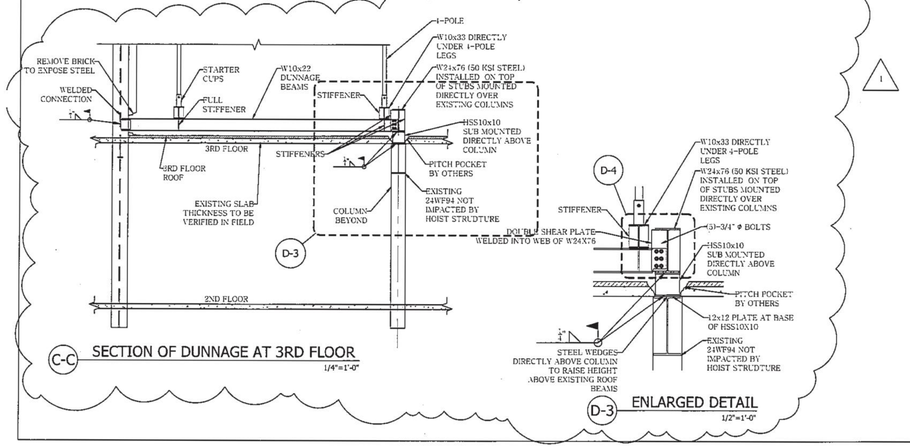

C-C SECTION OF DUNNAGE AT 3RD FLOOR
1/4"=1'-0"

D-3 ENLARGED DETAIL
1/2"=1'-0"

HOIST NOTES:

HOIST SHALL COMPLY TO SECTION 3316 & 3318 OF THE NEW 2008 BUILDING CODE.

3316.1 Scope. Hoisting equipment shall meet and be used in accordance with the requirements of this section. Material hoists and bucket hoists shall also meet the requirements of Section 3317, personnel hoists shall also meet the requirements of Section 3318, and cranes and derricks shall also meet the requirements of Section 3319.

3316.2 Requirements. Hoisting equipment, its supports and runback structures shall be installed, operated, and maintained to eliminate hazard to the public or to property. It shall be unlawful to operate any such equipment that is not provided with a positive means for preventing the unauthorized operation of such machine. The means whereby such machines may be made inoperative shall be accepted by the department.

3316.3 Notification of hoisting accidents. The owner or person directly in charge of any hoisting equipment shall immediately notify the commissioner following any accident involving hoisting equipment. Following an incident, no person shall permit either of the following, without the permission of the commissioner:

1. Use of such hoisting equipment; or
2. Removal of the hoisting equipment or any part thereof from the area of the job site.

3316.4 Permit. Permits for hoisting equipment shall comply with the requirements of Sections 3316.4.1 through 3316.4.5.

3316.4.1 Acceptance of equipment. Hoists and all pre-manufactured runback structures shall be approved for use by the commissioner or other agency acceptable to the commissioner

Exception: Cranes and derricks shall meet the requirements of Section 3319.3.

3316.4.2 Posting of permits. Permits, or duplicates of the permits, shall be posted in a conspicuous location in the car or on the equipment.

3316.4.3 Construction documents. Copies of the written permit application and approved construction documents shall be kept at the site and made available to the commissioner upon request.

3316.4.4 Permit signage. Following the receipt of a permit to install a hoist, the permit holder shall post a sign that meets the requirements of Section 3301.9.6. Such sign shall be clearly visible from the street.

3316.4.5 Other temporary signage. Other than as specified in Section 3301.10, there shall be no information, pictorial representation, or any business or advertising messages posted on the hoisting equipment or runback structure.

3316.5 Design, construction and inspection. Hoisting equipment, its supports and runback structures shall be designed, constructed and inspected in accordance with rules promulgated by the commissioner.

3316.6 Rope inspection and replacement. All ropes used in hoisting equipment shall meet the inspection and replacement requirements specified in rules promulgated by the commissioner.

3316.7 Operation. Only operators designated by the person causing such hoisting equipment to be used shall operate such hoisting machinery. Operators and signalmen/signalwomen shall be qualified for the operation they perform. The operator shall be responsible for making the machine inoperative before he or she leaves the machine.

3316.7.2 Use during installation, jumping, dismantling, or alteration. Personnel and building materials connected with or related to the building project shall not be moved by the hoist while it is being installed, jumped, dismantled or altered.

3316.8 Maintenance. Hoisting equipment, its supports and runback structures shall be maintained in compliance with the manufacturing specifications and rules promulgated by the commissioner. If there is a discrepancy, the stricter requirement shall be met.

3317.2 Permit. The equipment user or his or her designated representative shall obtain a written permit issued by the commissioner on the basis of construction documents, drawings and specifications prior to erecting or installing all power-operated, material hoists, including any runback structure or supports.

Exception: Power-operated, non-guided material hoists with a maximum capacity of one ton or less and installed on new construction. or on alterations where the operation of the hoist is confined within the property and the site is protected in accordance with Section 3307.

3317.3 Design, inspection, and operation. Material hoists, bucket hoists and their components shall be designed, inspected, and operated in accordance with rules promulgated by the commissioner.

3317.4 Construction. Material hoists, bucket hoists and their components shall be constructed in compliance with the manufacturing specifications, the requirements of this code, and rules promulgated by the commissioner. If there is a discrepancy, the stricter requirement shall be met.

Upon completion of the installation of the hoisting equipment and/or its runback structure, an inspection report verifying that the hoist has been installed in accordance with the design drawings, construction documents and specifications shall be prepared by the designer, installer or an approved inspection agency designated by both the designer and installer.

3317.5 Operation. Notwithstanding any other provision of law, material hoists with a manufacturer's capacity over one ton shall be operated only by persons holding a Class A or Class B Hoisting Machine Operators License except during installation, jumping, dismantling or alteration operations.

SECTION BC3318
PERSONNEL HOISTS

3318.1 Scope. Personnel hoists shall meet and be used in accordance with the requirements of this section and Section 3316.

3318.2 Permit. The equipment user or his or her designated representative shall obtain a written permit issued by the commissioner on the basis of construction documents, drawings and specifications prior to erecting or installing all power-operated, material hoists, including any runback structure or supports.

3318.3 Design and inspection. Personnel hoists and their components shall be designed and inspected in accordance with rules promulgated by the commissioner.

3318.4 Construction. Personnel hoists and their components shall be constructed in compliance with the manufacturer's specifications, this code, and rules promulgated by the commissioner. If there is a discrepancy, the stricter requirement shall be met.

Upon completion of the installation of the hoisting equipment and/or its runback structure, an inspection report verifying that the hoist has been installed in accordance with the design drawings, construction documents and specifications shall be prepared by the designer, installer or third-party designated by both the designer and installer and acceptable to the commissioner.

3318.5 Operation. Personnel hoists and their components shall be operated in accordance with this code and rules promulgated by the commissioner.

When the hoist is equipped with manual controls, the hoist shall be operated by a competent qualified operator. Only the operator authorized by the equipment user shall operate the hoist.

3318.5.1 Making safety devices inoperative. No person shall at any time make any required safety device or electrical protective device inoperative except when necessary during tests, inspections and maintenance.

Immediately upon completion of the tests, inspections and maintenance, such devices shall be restored to their normal operating condition in conformance with the applicable requirements of this section.

REV#1- DUNNAGE DETAILS AT ROOF

SAFWAY Atlantic
700 COMMERCIAL AVENUE
CARLSTADT, NJ 07072
TEL: 201 636 5500
FAX: 201 636 5542

SEAL & SIGNATURE
STATE OF NEW YORK — PAUL A. PEROLA — LICENSED PROFESSIONAL ENGINEER
Paul A. Perola

PROJECT:	600 EAST 125TH STREET BUILDING NO 102
TITLE:	HOIST INSTALLATION DETAILS
CLIENT:	—
CAD FILE NO:	—
DATE:	11.13.14
PROJECT NO:	—
DWG BY:	ANG
CHK BY:	GK
DWG NO:	EQ-002.00

2 OF 2

ADDENDUM DRAWING 09/24/2015

NEW YORK STATE OF OPPORTUNITY. Office of General Services
DESIGN & CONSTRUCTION

CONSULTANTS:

WARNING:
THE ALTERATION OF THIS MATERIAL IN ANY WAY, UNLESS DONE UNDER THE DIRECTION OF A COMPARABLE PROFESSIONAL, I.E. ARCHITECT FOR AN ARCHITECT, ENGINEER FOR AN ENGINEER OR LANDSCAPE ARCHITECT FOR A LANDSCAPE ARCHITECT, IS A VIOLATION OF THE NEW YORK STATE EDUCATION LAW AND/OR REGULATIONS AND IS A CLASS 'A' MISDEMEANOR.

CONTRACT: CONSTRUCTION

TITLE: MAJOR BUILDING RENOVATION FOR THE MANHATTAN FORENSIC RELOCATION

LOCATION: NYS OFFICE OF MENTAL HEALTH MANHATTAN PSYCHIATRIC CENTER WARDS ISLAND, NY

CLIENT: NYS OFFICE OF MENTAL HEALTH

MARK	DATE	DESCRIPTION
8	09/24/2015	ADDENDUM 8

PROJECT NUMBER:	44578
DESIGNED BY:	JM
DRAWN BY:	MG
FIELD CHECK:	NA
APPROVED:	NA

SHEET TITLE: HOIST DETAILS

BUILDING NUMBER:

DRAWING NUMBER: CS-202

SHEET OF

SYMBOL: TYPE	DESCRIPTION	LAMP	FIXTURE WATTS	VOLT	MANUFACTURER & CATALOG NO.
S5b	DESCRIPTION: RECESSED NOM. 2'X4' 3-LAMP 28W T5 FLUORESCENT TROFFER WITH CENTER BASKET; MOUNTED IN SECURED METAL TORSION SPRING CEILING OPTICS: PROVIDE WITH A 0.375" CLEAR POLYCARBONATE LENS LOCATION/ REMARKS: [EXERCISE ROOM/ CLASSROOM/ WEIGHT ROOM/ RECREATION ROOM/ VISITING ROOM/ PANTRY/ RECOVERY/ TREATMENT/ SALLY PORT/ JUDGES CHAMBER/ THERAPY/ NOISE ACTIVITY ROOM/ LOBBY/ QUIET ROOM/ ART AND CRAFT ROOM/ COMPUTER LAB/ MEDICATION/ CHARTING] FIXTURE DIMENSION SHALL BE NOMINAL 22.68" X 46.68" (MAXIMUM 6.10" DEEP). FIXTURE HOUSING AND DOOR SHALL BE DIE-FORMED 14 GAUGE PAINTED COLD ROLLED STEEL. PROVIDE FINISH WITH POLYESTER POWDER COAT FINISH. ALL EXPOSED FIXTURE AND INSTALLATION FASTENERS SHALL BE TAMPER RESISTANT, AND SHALL BE HEXALOBULAR (6-LOBED), PIN-REJECT, INTERNAL DRIVE SYSTEM, MEETING ISO STANDARD 10664. ENTIRE ASSEMBLY SHALL BE UL LISTED FOR WET LOCATION (IP65). FIXTURE SHALL BE UL LISTED FOR THROUGH WIRING AND BEAR IBEW LABEL. TOTAL LUMINAIRE EFFICIENCY SHALL BE MINIMUM OF 43%. SPACING CRITERION SHALL BE 1.28 (0-180), 1.46 (90-270) AND 1.54 (DIAGONAL). FIXTURE SHALL BE SUITABLE TO MOUNT IN SECURED METAL TORSION SPRING CEILING SYSTEM. INSTALLING CONTRACTOR TO PROVIDE ALL NECESSARY SUPPORT REQUIRED FOR SAFE AND PROPER MOUNTING. BALLAST: PROVIDE WITH (1) ONE 2-LAMP & (1) ONE 1-LAMP INTEGRAL SOLID-STATE PROGRAMMED RAPID START ELECTRONIC 170 mA 277 VOLT BALLAST. BALLAST SHALL BE CLASS P, TYPE A RATED. MIN. BALLAST FACTOR: 1.0. BALLAST SHALL BE ASSEMBLED ON A UNITIZED REMOVABLE TRAY WITH QUICK DISCONNECT PLUG. FIXTURE SHALL BE TANDEM-WIRED WHEREVER FEASIBLE.	(3) F28W/T5/835/ECO [GE] [2900 LUMEN] [3500°K]	93w	277v	KENALL #MMAC24-F-0/0-B-3-28-RS-2-277-AMF (OMH APPROVED FIXTURE)
S5c	DESCRIPTION: RECESSED NOM. 2'X4' 2-LAMP 54W T5HO FLUORESCENT TROFFER WITH CENTER BASKET; MOUNTED IN SECURED METAL TORSION SPRING CEILING OPTICS: PROVIDE WITH A 0.375" CLEAR POLYCARBONATE LENS LOCATION/ REMARKS: [OFFICES/ EXAM ROOM/ TREATMENT] FIXTURE DIMENSION SHALL BE NOMINAL 22.68" X 46.68" (MAXIMUM 6.10" DEEP). FIXTURE HOUSING AND DOOR SHALL BE DIE-FORMED 14 GAUGE PAINTED COLD ROLLED STEEL. PROVIDE FINISH WITH POLYESTER POWDER COAT FINISH. ALL EXPOSED FIXTURE AND INSTALLATION FASTENERS SHALL BE TAMPER RESISTANT, AND SHALL BE HEXALOBULAR (6-LOBED), PIN-REJECT, INTERNAL DRIVE SYSTEM, MEETING ISO STANDARD 10664. ENTIRE ASSEMBLY SHALL BE UL LISTED FOR WET LOCATION (IP65). FIXTURE SHALL BE UL LISTED FOR THROUGH WIRING AND BEAR IBEW LABEL. TOTAL LUMINAIRE EFFICIENCY SHALL BE MINIMUM OF 43%. SPACING CRITERION SHALL BE 1.28 (0-180), 1.46 (90-270) AND 1.54 (DIAGONAL). FIXTURE SHALL BE SUITABLE TO MOUNT IN SECURED METAL TORSION SPRING CEILING SYSTEM. INSTALLING CONTRACTOR TO PROVIDE ALL NECESSARY SUPPORT REQUIRED FOR SAFE AND PROPER MOUNTING. BALLAST: PROVIDE WITH (1) ONE 2-LAMP INTEGRAL SOLID-STATE PROGRAMMED RAPID START ELECTRONIC 460 mA 277 VOLT BALLAST. BALLAST SHALL BE CLASS P, TYPE A RATED. MIN. BALLAST FACTOR: 1.0. BALLAST SHALL BE ASSEMBLED ON A UNITIZED REMOVABLE TRAY WITH QUICK DISCONNECT PLUG. FIXTURE SHALL BE TANDEM-WIRED WHEREVER FEASIBLE.	(2) F54W/T5/835/ECO [GE] [5000 LUMEN] [3500°K]	117w	277v	KENALL #MMAC24-F-0/0-B-2-54-RS-1-277-AMF (OMH APPROVED FIXTURE)
S5d	DESCRIPTION: RECESSED NOM. 2'X4' 2-LAMP 54W T5HO FLUORESCENT TROFFER WITH CENTER BASKET; MOUNTED IN GYP. CEILING OPTICS: PROVIDE WITH A 0.375" CLEAR POLYCARBONATE LENS LOCATION/ REMARKS: [OFFICES/ EXAM ROOM] FIXTURE DIMENSION SHALL BE NOMINAL 22.68" X 46.68" (MAXIMUM 6.10" DEEP). FIXTURE HOUSING AND DOOR SHALL BE DIE-FORMED 14 GAUGE PAINTED COLD ROLLED STEEL. PROVIDE FINISH WITH POLYESTER POWDER COAT FINISH. ALL EXPOSED FIXTURE AND INSTALLATION FASTENERS SHALL BE TAMPER RESISTANT, AND SHALL BE HEXALOBULAR (6-LOBED), PIN-REJECT, INTERNAL DRIVE SYSTEM, MEETING ISO STANDARD 10664. ENTIRE ASSEMBLY SHALL BE UL LISTED FOR WET LOCATION (IP65). FIXTURE SHALL BE UL LISTED FOR THROUGH WIRING AND BEAR IBEW LABEL. TOTAL LUMINAIRE EFFICIENCY SHALL BE MINIMUM OF 43%. SPACING CRITERION SHALL BE 1.28 (0-180), 1.46 (90-270) AND 1.54 (DIAGONAL). FIXTURE SHALL BE SUITABLE TO MOUNT IN GYPSUM BOARD CEILING SYSTEM. INSTALLING CONTRACTOR TO PROVIDE ALL NECESSARY SUPPORT REQUIRED FOR SAFE AND PROPER MOUNTING. BALLAST: PROVIDE WITH (1) ONE 2-LAMP INTEGRAL SOLID-STATE PROGRAMMED RAPID START ELECTRONIC 460 mA 277 VOLT BALLAST. BALLAST SHALL BE CLASS P, TYPE A RATED. MIN. BALLAST FACTOR: 1.0. BALLAST SHALL BE ASSEMBLED ON A UNITIZED REMOVABLE TRAY WITH QUICK DISCONNECT PLUG. FIXTURE SHALL BE TANDEM-WIRED WHEREVER FEASIBLE.	(2) F54W/T5/835/ECO [GE] [5000 LUMEN] [3500°K]	117w	277v	KENALL #MMAC24-F-0/0-B-2-54-RS-1-277-AMF (OMH APPROVED FIXTURE)
S6	DESCRIPTION: RECESSED NOM. 2'X2' 2-LAMP 14W T5 FLUORESCENT TROFFER WITH CENTER BASKET; MOUNTED IN SECURED METAL TORSION SPRING CEILING OPTICS: PROVIDE WITH A 0.375" CLEAR POLYCARBONATE LENS LOCATION/ REMARKS: [PATIENT CORRIDOR/ VESTIBULE/ SALLY PORT/ OBSERVATION POST] FIXTURE DIMENSION SHALL BE NOMINAL 22.68" X 22.68" (MAXIMUM 6.10" DEEP). FIXTURE HOUSING AND DOOR SHALL BE DIE-FORMED 14 GAUGE PAINTED COLD ROLLED STEEL. PROVIDE FINISH WITH POLYESTER POWDER COAT FINISH. ALL EXPOSED FIXTURE AND INSTALLATION FASTENERS SHALL BE TAMPER RESISTANT, AND SHALL BE HEXALOBULAR (6-LOBED), PIN-REJECT, INTERNAL DRIVE SYSTEM, MEETING ISO STANDARD 10664. ENTIRE ASSEMBLY SHALL BE UL LISTED FOR WET LOCATION (IP65). FIXTURE SHALL BE UL LISTED FOR THROUGH WIRING AND BEAR IBEW LABEL. TOTAL LUMINAIRE EFFICIENCY SHALL BE MINIMUM OF 41%. SPACING CRITERION SHALL BE1.24 (0-180), 1.36 (90-270) AND 1.44 (DIAGONAL). FIXTURE SHALL BE SUITABLE TO MOUNT IN SECURED METAL TORSION SPRING CEILING SYSTEM. INSTALLING CONTRACTOR TO PROVIDE ALL NECESSARY SUPPORT REQUIRED FOR SAFE AND PROPER MOUNTING. BALLAST: PROVIDE WITH (1) ONE 2-LAMP INTEGRAL SOLID-STATE PROGRAMMED RAPID START ELECTRONIC 170 mA 277 VOLT BALLAST. BALLAST SHALL BE CLASS P, TYPE A RATED. MIN. BALLAST FACTOR: 1.0. BALLAST SHALL BE ASSEMBLED ON A UNITIZED REMOVABLE TRAY WITH QUICK DISCONNECT PLUG. FIXTURE SHALL BE TANDEM-WIRED WHEREVER FEASIBLE.	(2) F14W/T5/835/ECO [GE] [1350 LUMEN] [3500°K]	32w	277v	KENALL #MMAC22-F-0/0-B-2-14-RS-1-277-AMF (OMH APPROVED FIXTURE)
S6a	DESCRIPTION: RECESSED NOM. 2'X2' 3-LAMP 24W T5HO FLUORESCENT TROFFER WITH CENTER BASKET; MOUNTED IN SECURED METAL TORSION SPRING CEILING OPTICS: PROVIDE WITH A 0.375" CLEAR POLYCARBONATE LENS LOCATION/ REMARKS: [THERAPY/ TREATMENT] FIXTURE DIMENSION SHALL BE NOMINAL 22.68" X 22.68" (MAXIMUM 6.10" DEEP). FIXTURE HOUSING AND DOOR SHALL BE DIE-FORMED 14 GAUGE PAINTED COLD ROLLED STEEL. PROVIDE FINISH WITH POLYESTER POWDER COAT FINISH. ALL EXPOSED FIXTURE AND INSTALLATION FASTENERS SHALL BE TAMPER RESISTANT, AND SHALL BE HEXALOBULAR (6-LOBED), PIN-REJECT, INTERNAL DRIVE SYSTEM, MEETING ISO STANDARD 10664. ENTIRE ASSEMBLY SHALL BE UL LISTED FOR WET LOCATION (IP65). FIXTURE SHALL BE UL LISTED FOR THROUGH WIRING AND BEAR IBEW LABEL. TOTAL LUMINAIRE EFFICIENCY SHALL BE MINIMUM OF 41%. SPACING CRITERION SHALL BE1.24 (0-180), 1.36 (90-270) AND 1.44 (DIAGONAL). FIXTURE SHALL BE SUITABLE TO MOUNT IN SECURED METAL TORSION SPRING CEILING SYSTEM. INSTALLING CONTRACTOR TO PROVIDE ALL NECESSARY SUPPORT REQUIRED FOR SAFE AND PROPER MOUNTING. BALLAST: PROVIDE WITH (1) ONE 2-LAMP & (1) ONE 1-LAMP INTEGRAL SOLID-STATE PROGRAMMED RAPID START ELECTRONIC 300 mA 277 VOLT BALLAST. BALLAST SHALL BE CLASS P, TYPE A RATED. MIN. BALLAST FACTOR: 1.0. BALLAST SHALL BE ASSEMBLED ON A UNITIZED REMOVABLE TRAY WITH QUICK DISCONNECT PLUG. FIXTURE SHALL BE TANDEM-WIRED WHEREVER FEASIBLE.	(3) F24W/T5/835/ECO [GE] [2000 LUMEN] [3500°K]	80w	277v	KENALL #MMAC22-F-0/0-B-3-24-RS-2-277-AMF (OMH APPROVED FIXTURE)
S6b	DESCRIPTION: RECESSED NOM. 2'X2' 2-LAMP 14W T5 FLUORESCENT TROFFER WITH CENTER BASKET WITH (2) TWO SWITCH LEGS; MOUNTED IN SECURED METAL TORSION SPRING CEILING OPTICS: PROVIDE WITH A 0.375" CLEAR POLYCARBONATE LENS LOCATION/ REMARKS: [PATIENT CORRIDOR/ LOBBY/ SALLY PORT/ VESTIBULE] FIXTURE DIMENSION SHALL BE NOMINAL 22.68" X 22.68" (MAXIMUM 6.10" DEEP). FIXTURE HOUSING AND DOOR SHALL BE DIE-FORMED 14 GAUGE PAINTED COLD ROLLED STEEL. PROVIDE FINISH WITH POLYESTER POWDER COAT FINISH. ALL EXPOSED FIXTURE AND INSTALLATION FASTENERS SHALL BE TAMPER RESISTANT, AND SHALL BE HEXALOBULAR (6-LOBED), PIN-REJECT, INTERNAL DRIVE SYSTEM, MEETING ISO STANDARD 10664. ENTIRE ASSEMBLY SHALL BE UL LISTED FOR WET LOCATION (IP65). FIXTURE SHALL BE UL LISTED FOR THROUGH WIRING AND BEAR IBEW LABEL. TOTAL LUMINAIRE EFFICIENCY SHALL BE MINIMUM OF 41%. SPACING CRITERION SHALL BE1.24 (0-180), 1.36 (90-270) AND 1.44 (DIAGONAL). FIXTURE SHALL BE SUITABLE TO MOUNT IN SECURED METAL TORSION SPRING CEILING SYSTEM. INSTALLING CONTRACTOR TO PROVIDE ALL NECESSARY SUPPORT REQUIRED FOR SAFE AND PROPER MOUNTING. BALLAST: PROVIDE WITH (2) TWO 1-LAMP INTEGRAL SOLID-STATE PROGRAMMED RAPID START ELECTRONIC 170 mA 277 VOLT BALLAST. BALLAST SHALL BE CLASS P, TYPE A RATED. MIN. BALLAST FACTOR: 1.0. BALLAST SHALL BE ASSEMBLED ON A UNITIZED REMOVABLE TRAY WITH QUICK DISCONNECT PLUG. FIXTURE SHALL BE TANDEM-WIRED WHEREVER FEASIBLE.	(2) F14W/T5/835/ECO [GE] [1350 LUMEN] [3500°K]	34w	277v	KENALL #MMAC22-F-0/0-B-2-14-RS-2-277-AMF (OMH APPROVED FIXTURE)
S6c	DESCRIPTION: RECESSED NOM. 2'X2' 2-LAMP 14W T5 FLUORESCENT TROFFER WITH CENTER BASKET; MOUNTED IN GYP. CEILING OPTICS: PROVIDE WITH A 0.375" CLEAR POLYCARBONATE LENS LOCATION/ REMARKS: [EXAM/ CORRIDOR] FIXTURE DIMENSION SHALL BE NOMINAL 22.68" X 22.68" (MAXIMUM 6.10" DEEP). FIXTURE HOUSING AND DOOR SHALL BE DIE-FORMED 14 GAUGE PAINTED COLD ROLLED STEEL. PROVIDE FINISH WITH POLYESTER POWDER COAT FINISH. ALL EXPOSED FIXTURE AND INSTALLATION FASTENERS SHALL BE TAMPER RESISTANT, AND SHALL BE HEXALOBULAR (6-LOBED), PIN-REJECT, INTERNAL DRIVE SYSTEM, MEETING ISO STANDARD 10664. ENTIRE ASSEMBLY SHALL BE UL LISTED FOR WET LOCATION (IP65). FIXTURE SHALL BE UL LISTED FOR THROUGH WIRING AND BEAR IBEW LABEL. TOTAL LUMINAIRE EFFICIENCY SHALL BE MINIMUM OF 41%. SPACING CRITERION SHALL BE1.24 (0-180), 1.36 (90-270) AND 1.44 (DIAGONAL). FIXTURE SHALL BE SUITABLE TO MOUNT IN SECURED METAL TORSION SPRING CEILING SYSTEM. INSTALLING CONTRACTOR TO PROVIDE ALL NECESSARY SUPPORT REQUIRED FOR SAFE AND PROPER MOUNTING. BALLAST: PROVIDE WITH (1) ONE 2-LAMP INTEGRAL SOLID-STATE PROGRAMMED RAPID START ELECTRONIC 170 mA 277 VOLT BALLAST. BALLAST SHALL BE CLASS P, TYPE A RATED. MIN. BALLAST FACTOR: 1.0. BALLAST SHALL BE ASSEMBLED ON A UNITIZED REMOVABLE TRAY WITH QUICK DISCONNECT PLUG. FIXTURE SHALL BE TANDEM-WIRED WHEREVER FEASIBLE.	(2) F14W/T5/835/ECO [GE] [1350 LUMEN] [3500°K]	32w	277v	KENALL #MMAC22-F-0/0-B-2-14-RS-1-277-AMF (OMH APPROVED FIXTURE)
S7	NOT USED				
S8	DESCRIPTION: RECESSED NOM. 2'X4' 3-LAMP 28W T5 FLUORESCENT TROFFER WITH PRISMATIC LENS OPTICS: PROVIDE WITH A POLYCARBONATE LEXAN PRISMATIC REFRACTOR; MIN. 85% REFLECTANCE. LOCATION/ REMARKS: [SHOPS/ COMMISSARY] FIXTURE DIMENSION SHALL BE NOMINAL 23-3/4" X 4' (MAXIMUM 5" DEEP). ENTIRE FIXTURE SHALL BE CONSTRUCTED OF DIE FORMED 20 GAUGE PRIME COLD ROLLED STEEL. ALL STEEL COMPONENT PARTS SHALL BE PROTECTED AGAINST RUST AND COATED WITH BAKED WHITE POLYESTER ENAMEL. ALL EXPOSED FIXTURE AND INSTALLATION FASTENERS SHALL BE TAMPER RESISTANT, AND SHALL BE HEXALOBULAR (6-LOBED), PIN-REJECT, INTERNAL DRIVE SYSTEM, MEETING ISO STANDARD 10664. ENTIRE ASSEMBLY SHALL BE UL LISTED FOR DAMP LOCATION (IP55). FIXTURE SHALL BE UL LISTED FOR THROUGH WIRING AND BEAR IBEW LABEL. LUMINAIRE EFFICACY RATING (LER) SHALL BE MINIMUM OF 96. TOTAL LUMINAIRE EFFICIENCY SHALL BE MINIMUM OF 65%. SPACING CRITERION SHALL BE 1.24 (0-180), 1.22 (90-270) AND 1.28 (DIAGONAL). FIXTURE SHALL BE SUITABLE TO MOUNT IN SECURED METAL TORSION SPRING CEILING SYSTEM. INSTALLING CONTRACTOR TO PROVIDE ALL NECESSARY SUPPORT REQUIRED FOR SAFE AND PROPER MOUNTING. BALLAST: PROVIDE WITH (1) ONE 2-LAMP & (1) ONE 1-LAMP INTEGRAL SOLID-STATE PROGRAMMED RAPID START ELECTRONIC 170 mA 277 VOLT BALLAST. BALLAST SHALL BE CLASS P, TYPE A RATED. MIN. BALLAST FACTOR: 1.0. BALLAST SHALL BE ASSEMBLED ON A UNITIZED REMOVABLE TRAY WITH QUICK DISCONNECT PLUG. FIXTURE SHALL BE TANDEM-WIRED WHEREVER FEASIBLE	(3) F28W/T5/835/ECO [GE] [2900 LUMEN] [3500°K]	93w	277v	LEGION #672-328-F-ELECTRONIC BALLAST-DL-TP-XTA-RFL (OMH APPROVED FIXTURE)
S9-EM	DESCRIPTION: RECESSED NOM. 2'X2' 2-LAMP 14W T5 FLUORESCENT TROFFER WITH CENTER BASKET, EM BATTERY BACKUP BALLAST AND EM RELAY PACK DEVICE; DIMMABLE OPTICS: PROVIDE WITH A POLYCARBONATE LEXAN PRISMATIC REFRACTOR; MIN. 85% REFLECTANCE. LOCATION/ REMARKS: [COURTROOM] FIXTURE DIMENSION SHALL BE NOMINAL 22.68" X 22.68" (MAXIMUM 6.10" DEEP). FIXTURE HOUSING AND DOOR SHALL BE DIE-FORMED 14 GAUGE PAINTED COLD ROLLED STEEL. PROVIDE FINISH WITH POLYESTER POWDER COAT FINISH. ALL EXPOSED FIXTURE AND INSTALLATION FASTENERS SHALL BE TAMPER RESISTANT, AND SHALL BE HEXALOBULAR (6-LOBED), PIN-REJECT, INTERNAL DRIVE SYSTEM, MEETING ISO STANDARD 10664. ENTIRE ASSEMBLY SHALL BE UL LISTED FOR WET LOCATION (IP65). FIXTURE SHALL BE UL LISTED FOR THROUGH WIRING AND BEAR IBEW LABEL. TOTAL LUMINAIRE EFFICIENCY SHALL BE MINIMUM OF 41%. SPACING CRITERION SHALL BE1.24 (0-180), 1.36 (90-270) AND 1.44 (DIAGONAL). FIXTURE SHALL BE SUITABLE TO MOUNT IN SECURED METAL TORSION SPRING CEILING SYSTEM. INSTALLING CONTRACTOR TO PROVIDE ALL NECESSARY SUPPORT REQUIRED FOR SAFE AND PROPER MOUNTING. BALLAST: PROVIDE WITH (1) ONE 2-LAMP INTEGRAL SOLID-STATE PROGRAMMED RAPID START ELECTRONIC 0-10V DIMMING 170 mA 277 VOLT BALLAST [ADVANCE MARK 7 OR EQUAL]. BALLAST SHALL BE CLASS P, TYPE A RATED. MIN. BALLAST FACTOR: 1.0. BALLAST SHALL BE ASSEMBLED ON A UNITIZED REMOVABLE TRAY WITH QUICK DISCONNECT PLUG. FIXTURE SHALL BE TANDEM-WIRED WHEREVER FEASIBLE. PROVIDE WITH AN EM BATTERY PACK. 8	(2) F14W/T5/835/ECO [GE] [1350 LUMEN] [3500°K]	42.5w	277v	KENALL #MMAC22-F-0/0-B-2-14-RS 0-10V DIM-1-277-AMF-SEL (OMH APPROVED FIXTURE)
S10	NOT USED				
S11	NOT USED				

REVISED DRAWING 09/24/2015

NEW YORK STATE OF OPPORTUNITY. Office of General Services

DESIGN & CONSTRUCTION

CONSULTANTS:

RBSD ARCHITECTS P.C. | STV 100 Years

A Joint Venture
225 Park Avenue South
New York, New York 10003

WARNING:
THE ALTERATION OF THIS MATERIAL IN ANY WAY, UNLESS DONE UNDER THE DIRECTION OF A COMPARABLE PROFESSIONAL, I.E. ARCHITECT FOR AN ARCHITECT, ENGINEER FOR AN ENGINEER OR LANDSCAPE ARCHITECT FOR A LANDSCAPE ARCHITECT, IS A VIOLATION OF THE NEW YORK STATE EDUCATION LAW AND/OR REGULATIONS AND IS A CLASS 'A' MISDEMEANOR.

STATE OF NEW YORK · REDDY E. TAMAYO · LICENSED P.E. No. 071108 · PROFESSIONAL ENGINEER

CONTRACT: CONSTRUCTION

TITLE: MAJOR BUILDING RENOVATIONS FOR THE MANHATTAN FORENSIC RELOCATION

LOCATION: MANHATTAN PSYCHIATRIC CENTER, BUILDING No. 102
600 EAST 125TH STREET WARDS ISLAND, NY 10035

CLIENT: NYS OFFICE OF MENTAL HEALTH

MARK	DATE	DESCRIPTION
8	09/24/2015	ADDENDUM 8
	6-15-2015	BID DOCUMENT

PROJECT NUMBER:	44578
DESIGNED BY:	JN
DRAWN BY:	SA
FIELD CHECK:	NA
APPROVED:	FT

SHEET TITLE: LIGHTING FIXTURE SCHEDULE

BUILDING NUMBER: 102

DRAWING NUMBER: E-003

SHEET

9/21/2015 4:06:54 PM

SYMBOL: TYPE	DESCRIPTION	LAMP	FIXTURE WATTS	VOLT	MANUFACTURER & CATALOG NO.
X5b	DESCRIPTION: (2) 103W FULL CUTOFF 4000°K LED LUMINAIRE WITH TYPE III DISTRIBUTION MOUNTED ON A 20' FENCE POST; SEE DETAILS ON SHEET #E-508 LOCATION/ REMARKS: [EXTERIOR SECURITY FENCE] FIXTURE DIMENSIONS SHALL BE NOMINAL 15-1/2" X 28-3/4" (MAXIMUM 3-15/16" DEEP). FIXTURE HOUSING SHALL BE DIE-CAST ALUMINUM ALLOY. PROVIDE WITH DIE CAST HEAT SINK WITH POWDER COATED FINISH. PROVIDE WITH TOOL-LESS DOOR HARDWARE. ALL HARDWARE SHALL BE STAINLESS STEEL OR CORROSION RESISTANT. ALL SEALS AND SEALING DEVICES ARE LINED WITH SILICONE. ENTIRE ASSEMBLY SHALL BE IP66 RATED AND UL LISTED FOR THROUGH WIRING AND BEAR AN IBEW LABEL. HOUSING FINISHED IN SUPER DURABLE TGIC POLYSTER POWDER COAT PAINT. FINISH COLOR TO MATCH ARCHITECT'S COLOR CHIP (RAL COLOR). LUMINAIRE EFFICACY RATING (LER) SHALL BE MINIMUM OF81. SPACE CRITERION SHALL BE 2.68 (0-180), 3.42 (90-270), 2.52 (DIAGONAL). INSTALLING CONTRACTOR TO PROVIDE ALL NECESSARY SUPPORT REQUIRED FOR SAFE AND PROPER MOUNTING. LED MODULE AND DRIVER SHALL BE FIELD REPLACEABLE. PROVIDE QUICK DISCONNECT FOR LED MODULE AND DRIVER.LUMINAIRE MOUNTED ON A FENCE POST; REFER TO CIVIL ENGINEER'S DRAWINGS FOR THE FENCE POST INFORMATION. DRIVER: PROVIDE WITH (2) TWO 103W INTEGRAL 277V, 50/60Hz, SOUND A RATED, SOLID STATE ELECTRONIC DRIVER. DRIVER SHALL BE INSTALLED IN WATERPROOF LED DRIVER ENCLOSURE. DRIVER SHALL BE SUITABLE TO OPERATE AT TEMPERATURE OF -40°C TO +40°C. DRIVER SHALL BE FIELD REPLACEABLE. THE POWER SUPPLY SHALL BE OVERLOAD AND SHORT CIRCUIT PROTECTED AS WELL AS THERMALLY REGULATED TO PREVENT OVERHEATING. DRIVER SHALL BE ASSEMBLED ON A UNITIZED REMOVABLE TRAY WITH QUICK DISCONNECT PLUG.	(2) 103W/4K/70CRI LED CHIP ON BOARD LED MODULE [8340 LUMENS DELIVERED]	206w	277v	COOPER LIGHTING MCGRAW-EDISON #GLEON-AA-02-LED-E1-T3-FINISH COLOR BY ARCHITECT (CUSTOM FINISH COLOR)-TH-MA in assembly two (2) luminaire or approved equal by Lithonia, Kim, Beacon.
X6	DESCRIPTION: CEILING SURFACE MOUNTED 37W 4000°K LED LUMINAIRE OPTICS: PROVIDE WITH ONE-PIECE, INJECTION-MOLDED 0.125" THICK OPAL POLYCARBONATE LENS. LENS ATTACHED WITH 4 RECESSED T20 STAINLESS-STEEL TORX-HEAD FASTENERS. LOCATION/ REMARKS: [EXTERIOR CANOPY & OVERHANGS] FIXTURE DIMENSIONS SHALL BE NOMINAL 15-3/8" DIA. (7-3/4" DEEP). FIXTURE HOUSING SHALL BE DIE-CAST ALUMINUM WITH 16 GAUGE ALUMINUM BACKPLATE WITH A INJECTION MOLDED COLOR FINISH. FINISH COLOR TO MATCH ARCHITECT'S COLOR CHIP (RAL COLOR). ALL EXPOSED FIXTURE AND INSTALLATION FASTENERS SHALL BE TAMPER RESISTANT, AND SHALL BE HEXALOBULAR (6-LOBED), PIN-REJECT, INTERNAL DRIVE SYSTEM, MEETING ISO STANDARD 10664. PROVIDE WITH A BUILT-IN PHOTOCELL. ENTIRE ASSEMBLY SHALL BE WET LOCATION RATED AND UL LISTED FOR THROUGH WIRING AND BEAR AN IBEW LABEL. LUMINAIRE EFFICACY RATING (LER) SHALL BE MINIMUM OF 32. INSTALLING CONTRACTOR TO PROVIDE ALL NECESSARY SUPPORT REQUIRED FOR SAFE AND PROPER MOUNTING. DRIVER: PROVIDE WITH AN INTEGRAL 277V, 50/60Hz, SOUND A RATED, SOLID STATE ELECTRONIC DRIVER. DRIVER SHALL BE INSTALLED IN WATERPROOF LED DRIVER ENCLOSURE. DRIVER SHALL BE SUITABLE TO OPERATE AT TEMPERATURE OF -40°C TO +35°C. DRIVER SHALL BE FIELD REPLACEABLE. THE POWER SUPPLY SHALL BE OVERLOAD AND SHORT CIRCUIT PROTECTED AS WELL AS THERMALLY REGULATED TO PREVENT OVERHEATING. DRIVER SHALL BE ASSEMBLED ON A UNITIZED REMOVABLE TRAY WITH QUICK DISCONNECT PLUG.	37.2W/4K/70CRI LED CHIP ON BOARD LED MODULE [1198 LUMENS DELIVERED]	37w	277v	COOPER LIGHTING FAIL-SAFE #TRR15-C-LD2-40-840-FINISH COLOR BY ARCHITECT (CUSTOM FINISH COLOR) -UNV-ED-SP-VRSD-TR15-PC277 or approved equal by Luminaire LED, Lithonia.
X7	DESCRIPTION: (1) 206W FULL CUTOFF 4000°K LED LUMINAIRE WITH TYPE II DISTRIBUTION MOUNTED ON A 20' FENCE POST; SEE DETAILS ON SHEET #E-508 OPTICS: EXTERIOR RECREATION YARD FENCE] FIXTURE DIMENSIONS SHALL BE NOMINAL 15-1/2" X 28-3/4" (MAXIMUM 3-15/16" DEEP). FIXTURE HOUSING SHALL BE DIE-CAST ALUMINUM ALLOY. PROVIDE WITH DIE CAST HEAT SINK WITH POWDER COATED FINISH. PROVIDE WITH TOOL-LESS DOOR HARDWARE. ALL HARDWARE SHALL BE STAINLESS STEEL OR CORROSION RESISTANT. ALL SEALS AND SEALING DEVICES ARE LINED WITH SILICONE. ENTIRE ASSEMBLY SHALL BE IP66 RATED AND UL LISTED FOR THROUGH WIRING AND BEAR AN IBEW LABEL. HOUSING FINISHED IN SUPER DURABLE TGIC POLYSTER POWDER COAT PAINT. FINISH COLOR TO MATCH ARCHITECT'S COLOR CHIP (RAL COLOR). LUMINAIRE EFFICACY RATING (LER) SHALL BE MINIMUM OF 78. SPACE CRITERION SHALL BE 2.90 (0-180), 4.18 (90-270), 2.48 (DIAGONAL). INSTALLING CONTRACTOR TO PROVIDE ALL NECESSARY SUPPORT REQUIRED FOR SAFE AND PROPER MOUNTING. LED MODULE AND DRIVER SHALL BE FIELD REPLACEABLE. PROVIDE QUICK DISCONNECT FOR LED MODULE AND DRIVER. LUMINAIRE MOUNTED ON A FENCE POST; REFER TO CIVIL ENGINEER'S DRAWINGS FOR THE FENCE POST INFORMATION. LOCATION/ REMARKS: DRIVER: PROVIDE WITH (1) ONE 206W INTEGRAL 277V, 50/60Hz, SOUND A RATED, SOLID STATE ELECTRONIC DRIVER. DRIVER SHALL BE INSTALLED IN WATERPROOF LED DRIVER ENCLOSURE. DRIVER SHALL BE SUITABLE TO OPERATE AT TEMPERATURE OF -40°C TO +40°C. DRIVER SHALL BE FIELD REPLACEABLE. THE POWER SUPPLY SHALL BE OVERLOAD AND SHORT CIRCUIT PROTECTED AS WELL AS THERMALLY REGULATED TO PREVENT OVERHEATING. DRIVER SHALL BE ASSEMBLED ON A UNITIZED REMOVABLE TRAY WITH QUICK DISCONNECT PLUG.	(1)206W/4K/70CRI LED CHIP ON BOARD LED MODULE [16131 LUMENS DELIVERED]	206w	277v	COOPER LIGHTING MCGRAW-EDISON #GLEON-AA-04-LED-E1-T2-FINISH COLOR BY ARCHITECT (CUSTOM FINISH COLOR)-TH-MA in assembly one (1) luminaire or approved equal by Lithonia, Kim, Beacon.
X7a	DESCRIPTION: (1) 206W FULL CUTOFF 4000°K LED LUMINAIRE WITH TYPE IV DISTRIBUTION MOUNTED ON A 20' FENCE POST; SEE DETAILS ON SHEET #E-508 OPTICS: [EXTERIOR RECREATION YARD FENCE] PROVIDE WITH DIE CAST HEAT SINK WITH POWDER COATED FINISH. PROVIDE WITH TOOL-LESS DOOR HARDWARE. ALL HARDWARE SHALL BE STAINLESS STEEL OR CORROSION RESISTANT. ALL SEALS AND SEALING DEVICES ARE LINED WITH SILICONE. PROVIDE WITH A BUILT-IN PHOTOCELL. ENTIRE ASSEMBLY SHALL BE IP66 RATED AND UL LISTED FOR THROUGH WIRING AND BEAR AN IBEW LABEL. HOUSING FINISHED IN SUPER DURABLE TGIC POLYSTER POWDER COAT PAINT. FINISH COLOR TO MATCH ARCHITECT'S COLOR CHIP (RAL COLOR). LUMINAIRE EFFICACY RATING (LER) SHALL BE MINIMUM OF 74. SPACE CRITERION SHALL BE 2.60 (0-180), 2.02 (90-270), 2.56 (DIAGONAL). INSTALLING CONTRACTOR TO PROVIDE ALL NECESSARY SUPPORT REQUIRED FOR SAFE AND PROPER MOUNTING. LED MODULE AND DRIVER SHALL BE FIELD REPLACEABLE. PROVIDE QUICK DISCONNECT FOR LED MODULE AND DRIVER. LUMINAIRE MOUNTED ON A FENCE POST; REFER TO CIVIL ENGINEER'S DRAWINGS FOR THE FENCE POST INFORMATION. LOCATION/ REMARKS: DRIVER: PROVIDE WITH (1) ONE 206W INTEGRAL 277V, 50/60Hz, SOUND A RATED, SOLID STATE ELECTRONIC DRIVER. DRIVER SHALL BE INSTALLED IN WATERPROOF LED DRIVER ENCLOSURE. DRIVER SHALL BE SUITABLE TO OPERATE AT TEMPERATURE OF -40°C TO +40°C. DRIVER SHALL BE FIELD REPLACEABLE. THE POWER SUPPLY SHALL BE OVERLOAD AND SHORT CIRCUIT PROTECTED AS WELL AS THERMALLY REGULATED TO PREVENT OVERHEATING. DRIVER SHALL BE ASSEMBLED ON A UNITIZED REMOVABLE TRAY WITH QUICK DISCONNECT PLUG.	(1)206W/4K/70CRI LED CHIP ON BOARD LED MODULE [15405 LUMENS DELIVERED]	206w	277v	COOPER LIGHTING MCGRAW-EDISON #GLEON-AA-04-LED-E1-T4-FINISH COLOR BY ARCHITECT (CUSTOM FINISH COLOR)-TH-MA in assembly one (1) luminaire or approved equal by Lithonia, Kim, Beacon.
F1	DESCRIPTION: 4' SURFACE/PENDANT MOUNTED INDUSTRIAL FLUORESCENT FIXTURE WITH LAMP PROTECTING WIRE GUARD - PENDANT MOUNT 8'-0"AFF, UON [ELECTRICAL / MECHANICAL / STORAGE / I.T. / J.C./ UNASSIGNED]	(2) 28W T5 LINEAR FLUORESCENT	58w	120/ 277v	H.E. WILLIAMS #82-4-228T5S-EB2-UNV
F2	DESCRIPTION: 2'x4' RECESSED PRISMATIC LENS FLUORESCENT FIXTURE [STORAGE / I.T. / LINEN / UTILITY]	(2) 28W T5 LINEAR FLUORESCENT	58w	120/ 277v	H.E. WILLIAMS #50G-S24-S28T5S-SA12125-EB2-UNV
F3	DESCRIPTION: 4' WALL MOUNTED VANDAL-RESISTANT WET LOCATION LED FIXTURE WITH POLYCARBONATE LENS AND INTEGRAL OCCUPANCY SENSOR - 50% LED'S CONSTANTLY ON AND 50% SENSORED - WALL MOUNT 7'- 6"AFF [STAIRS]	57.9W/4K/82CRI LED	56w	277v	LUMINAIRE LED #VFP84-56WHP-4000K-277-CP-WHT-WET-OCC50-TX/SD
F4	DESCRIPTION: 2'x2' RECESSED PRISMATIC LENS FLUORESCENT FIXTURE [STORAGE / I.T. / J.C. / LINEN]	(2) 14W T5 LINEAR FLUORESCENT	29w	120/ 277v	H.E. WILLIAMS #50G-S22-S14T5S-SA12125-EB2-UNV
F5	DESCRIPTION: 4' WALL MOUNTED WET LOCATION INDUSTRIAL FLUORESCENT FIXTURE WITH ACRYLIC LENS [ELEVATOR PIT]	(2) 28W T5 LINEAR FLUORESCENT	59w	120/ 277v	H.E. WILLIAMS #92-4-228T5S-A-WET/2-EB2-UNV
F6	DESCRIPTION: ILLUMINATED EXIT SIGN SINGLE FACE WITH POLYCARBONATE FACE SHIELD AND TAMPER PROOF SCREWS; AC ONLY - DIRECTIONAL ARROWS AS INDICATED - CEILING OR WALL (8'-0" AFF) MOUNT [BUILDING EGRESS]	2.6W LED	2.6w	120/ 277v	DUAL-LITE #SE-S-R-W-VTR
F7	DESCRIPTION: ILLUMINATED EXIT SIGN DOUBLE FACE WITH POLYCARBONATE FACE SHIELD AND TAMPER PROOF SCREWS; AC ONLY - DIRECTIONAL ARROWS AS INDICATED - CEILING OR WALL (8'-0" AFF) MOUNT [BUILDING EGRESS]	2.6W LED	2.6w	120/ 277v	DUAL-LITE #SE-D-R-W-VTR
F8	DESCRIPTION: DUAL-HEAD EMERGENCY LIGHTING BATTERY PACK - MOUNT 7'-6" AFF, UON [EMERGENCY ELECTRICAL ROOMS/ BUILDING 106 BASEMENT]	(2) 3W LED	6w	120/ 277v	DUAL-LITE #LZ2-03L
F9	DESCRIPTION: RECCESSED NOM. 1'X4' 1-LAMP 28W T5 FLUORESCENT TROFFER WITH SATINE LENS; MOUNTED IN ACT. CEILING [BUILDING 106 BASEMENT]	(1) 28W T5 LINEAR FLUORESCENT	32w	120v	PINNACLE #AD14A-1T5-G1/G9/GS [TBD]-UNV-1C-W-GLR
F10	DESCRIPTION: RECCESSED NOM. 2'X2' 1-LAMP 14W T5 FLUORESCENT TROFFER WITH SATINE LENS; MOUNTED IN ACT. CEILING [BUILDING 106 BASEMENT]	(2) 14W T5 LINEAR FLUORESCENT	32w	120v	PINNACLE #AD22A-2T5-G1/G9/GS [TBD]-UNV-1C-W-GLR
F11	DESCRIPTION: ILLUMINATED EXIT SIGN SINGLE FACE; WITH EMERGENCY NICKEL-CADMIUM BATTERY - CEILING OR WALL (8'-0" AFF) MOUNT [BUILDING 106 BASEMENT]	3.8W LED	3.8w	120v	DUAL-LITE #SE-S-R-W-E
F12	DESCRIPTION: 4' WALL MOUNTED VANDAL-RESISTANT LED FIXTURE WITH POLYCARBONATE LENS - WALL MOUNT 7'- 0"AFF [BUILDING 106 BASEMENT]	57.9W/4K/82CRI LED	56w	277v	LUMINAIRE LED #VFP84-56WHP-4000K-120-CP-WHT-TX/SD
FX1	DESCRIPTION: FULL CUTOFF LED WALLPACK WITH TYPE IV DISTRIBUTION - WALL MOUNT 1'-0" ABOVE EGRESS DOOR OR 7'-0" ABOVE EGRESS STAIR [EXTERIOR EGRESS DOORS AND STAIRS]	8 47W/4K/70CRI LED	8 47w	120/ 277v	8 LITHONIA #WSRLED-2-10A700/40K-SR4-MVOLT-DDBXD
FX2	DESCRIPTION: FULL CUTOFF LED WALLPACK WITH TYPE IV DISTRIBUTION AND INTEGRAL BUTTON TYPE PHOTOCELL - MOUNT 7'-0" ABOVE FINISHED FLOOR [EXTERIOR ELECTRICAL AND MECHANICAL EQUIPMENT]	69W/4K/70CRI LED	69w	120v	LITHONIA #CSXWLED-30C-700-40K-T4M-120-PE-DDBXD

REVISED DRAWING 09/24/2015

NEW YORK STATE OF OPPORTUNITY. Office of General Services

DESIGN & CONSTRUCTION

CONSULTANTS:

RBSD ARCHITECTS P.C. | STV 100 Years

A Joint Venture

225 Park Avenue South
New York, New York 10003

WARNING:
THE ALTERATION OF THIS MATERIAL IN ANY WAY, UNLESS DONE UNDER THE DIRECTION OF A COMPARABLE PROFESSIONAL, I.E. ARCHITECT FOR AN ARCHITECT, ENGINEER FOR AN ENGINEER OR LANDSCAPE ARCHITECT FOR A LANDSCAPE ARCHITECT, IS A VIOLATION OF THE NEW YORK STATE EDUCATION LAW AND/OR REGULATIONS AND IS A CLASS 'A' MISDEMEANOR.

STATE OF NEW YORK · FREDDY E. TAMAYO · LICENSED PROFESSIONAL ENGINEER · No. 071106

CONTRACT: CONSTRUCTION

TITLE: MAJOR BUILDING RENOVATIONS FOR THE MANHATTAN FORENSIC RELOCATION

LOCATION: MANHATTAN PSYCHIATRIC CENTER, BUILDING No. 102
600 EAST 125TH STREET WARDS ISLAND, NY 10035

CLIENT: NYS OFFICE OF MENTAL HEALTH

MARK	DATE	DESCRIPTION
8	09/24/2015	ADDENDUM 8
	6-15-2015	BID DOCUMENT

PROJECT NUMBER:	44578
DESIGNED BY:	JN
DRAWN BY:	SA
FIELD CHECK:	NA
APPROVED:	FT

SHEET TITLE: LIGHTING FIXTURE SCHEDULE

BUILDING NUMBER: 102

DRAWING NUMBER: E-007

SHEET

9/21/2015 4:06:59 PM

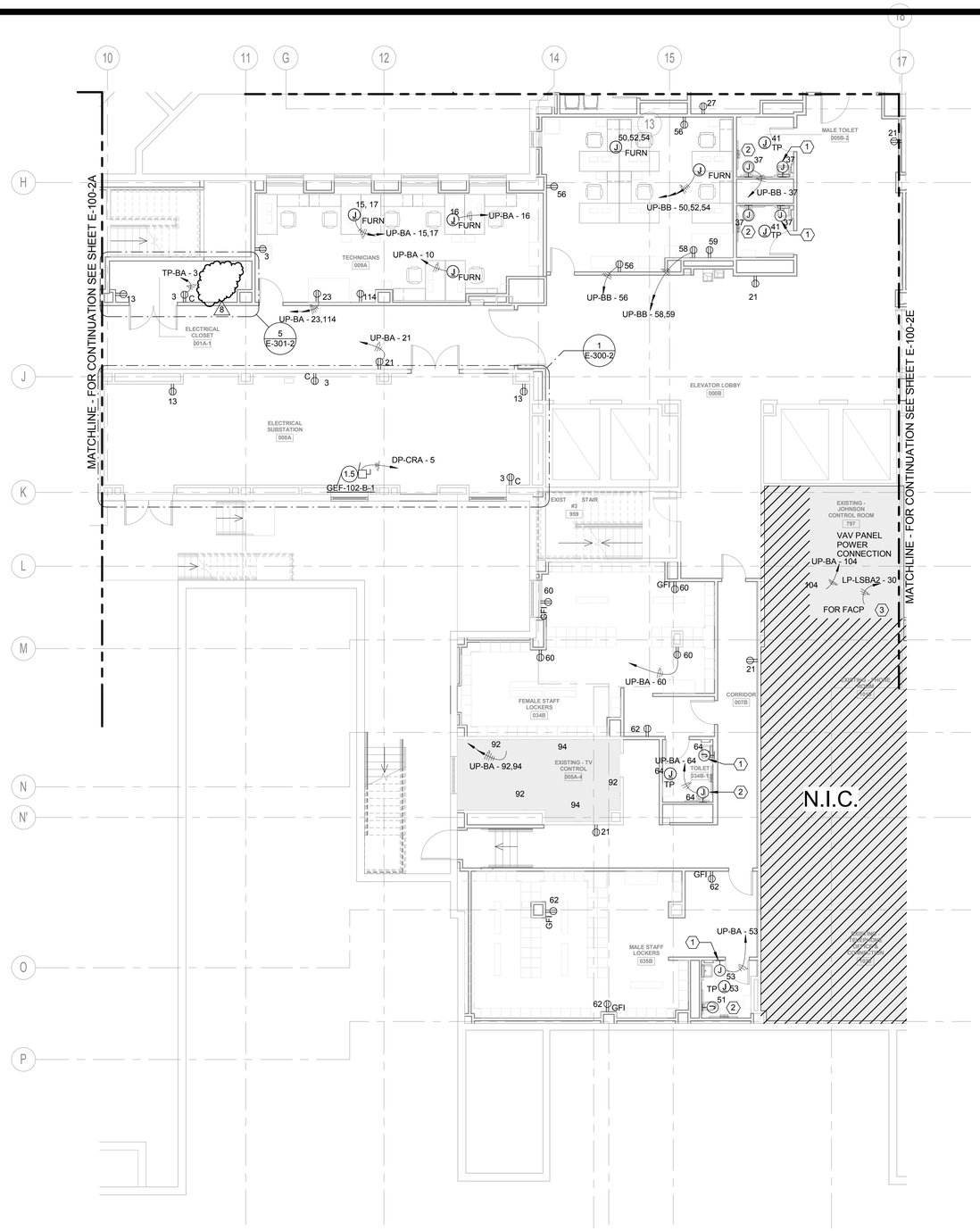

1 BASEMENT POWER PLAN

REVISED DRAWING 09/24/2015

NOTES:

1. FOR SYMBOLS AND ABBREVIATIONS, SEE DRAWING E-001.
2. FOR PANEL SCHEDULES, SEE DRAWINGS IN THE E500 SERIES.
3. REFER TO TELECOM DRAWINGS FOR EXACT LOCATION AND QUANTITY OF TELECOM DEVICES.
4. REFER TO FIRE ALARM DRAWINGS FOR EXACT LOCATION AND QUANTITY OF FIRE ALARM DEVICES.
5. REFER TO SECURITY DRAWINGS FOR EXACT LOCATION AND QUANTITY OF SECURITY DEVICES.
6. REFER TO MECHANICAL AND PLUMBING DRAWINGS FOR EXACT EQUIPMENT SIZE AND LOCATION.
7. REFER TO DRAWING E-600-2 FOR FEEDER SIZES OF MECHANICAL EQUIPMENT. (TYPICAL)
8. ALL RECEPTACLES LOCATED WITHIN SIX FEET OF A SINK SHALL BE OF THE GFI TYPE.
9. ALL JUNCTION BOXES FOR FIRE SMOKE DAMPERS (FSD) SHALL BE CIRCUITED FROM 120V LIFE SAFETY PANEL LP-LS_A2. CONNECTION OF MOTORIZED DAMPERS SHALL NOT EXCEED 4 PER CIRCUIT
10. ALL PREWIRED FURNITURE FEEDS SHALL BE COORDINATED WITH THE FINAL APPROVED FURNITURE SHOP DRAWINGS PRIOR TO ROUGH IN.

KEY NOTES:

1. PROVIDE JUNCTION BOX AND FINAL CONNECTION FOR FAUCET TRANSFORMER. COORDINATE LOCATION WITH PLUMBING DRAWINGS.
2. PROVIDE JUNCTION BOX AND FINAL CONNECTION FOR TOILET TRANSFORMER. COORDINATE LOCATION WITH PLUMBING DRAWINGS.
3. NOT USED.
4. NOT USED.

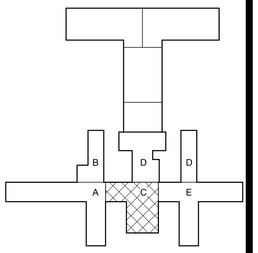

PROJECT NORTH

0 4' 8' 16'
SCALE: 1/8" = 1'-0"

NEW YORK STATE OF OPPORTUNITY. Office of General Services

DESIGN & CONSTRUCTION

CONSULTANTS:

RBSD ARCHITECTS P.C. | STV 100 Years

A Joint Venture
225 Park Avenue South
New York, New York 10003

WARNING:
THE ALTERATION OF THIS MATERIAL IN ANY WAY, UNLESS DONE UNDER THE DIRECTION OF A COMPARABLE PROFESSIONAL, I.E. ARCHITECT FOR AN ARCHITECT, ENGINEER FOR AN ENGINEER OR LANDSCAPE ARCHITECT FOR A LANDSCAPE ARCHITECT, IS A VIOLATION OF THE NEW YORK STATE EDUCATION LAW AND/OR REGULATIONS AND IS A CLASS 'A' MISDEMEANOR.

CONTRACT: CONSTRUCTION

TITLE: MAJOR BUILDING RENOVATIONS FOR THE MANHATTAN FORENSIC RELOCATION

LOCATION: MANHATTAN PSYCHIATRIC CENTER, BUILDING No. 102
600 EAST 125TH STREET WARDS ISLAND, NY 10035

CLIENT: NYS OFFICE OF MENTAL HEALTH

MARK	DATE	DESCRIPTION
8	09/24/2015	ADDENDUM 8
	6-15-2015	BID DOCUMENT

PROJECT NUMBER:	44578
DESIGNED BY:	JN
DRAWN BY:	SA
FIELD CHECK:	NA
APPROVED:	FT

SHEET TITLE:
ELECTRICAL BASEMENT POWER PLAN, PART C

BUILDING NUMBER: 102

DRAWING NUMBER: E-100-2C

SHEET

9/22/2015 12:53:23 PM

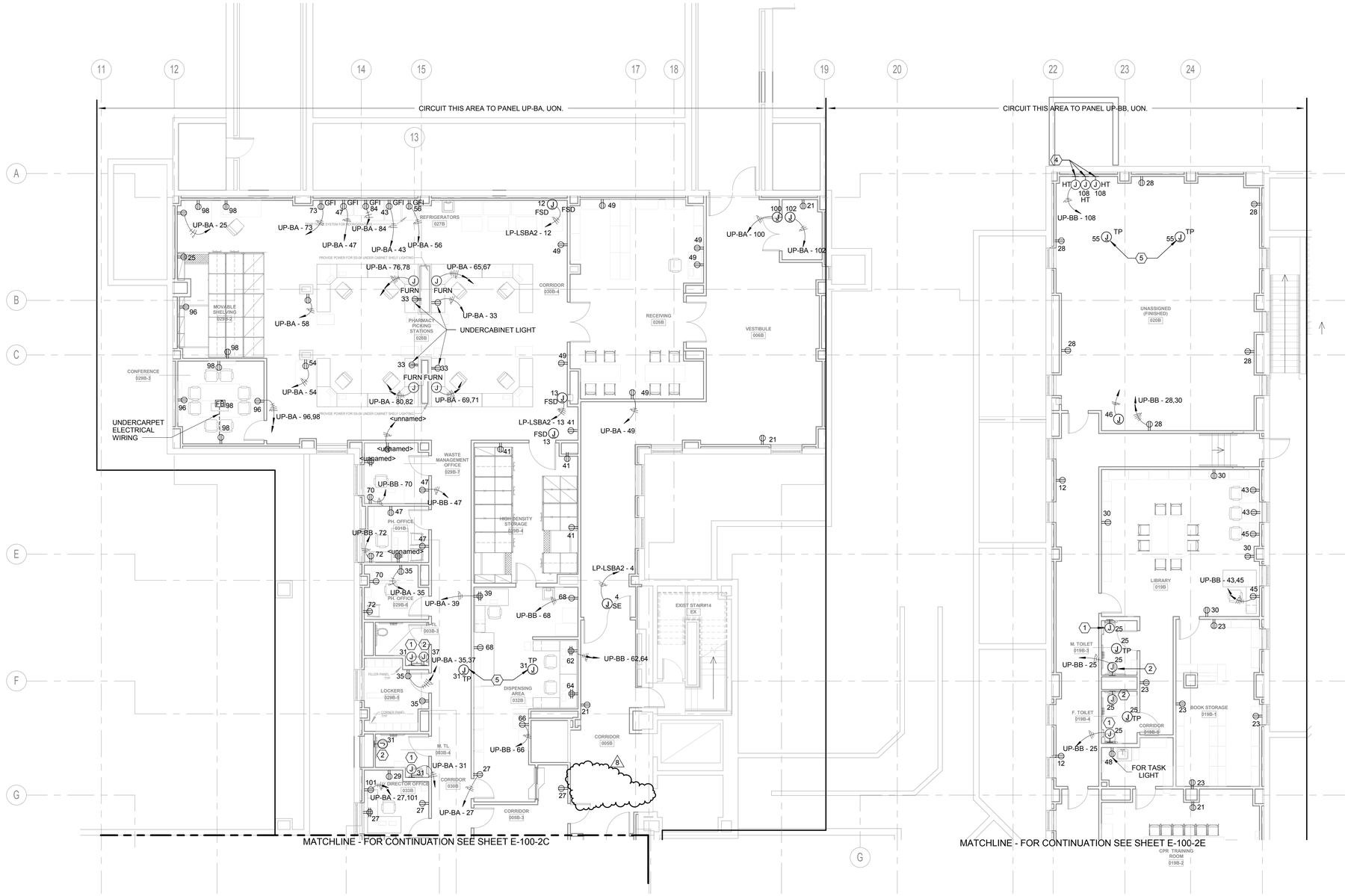

NOTES:

1. FOR SYMBOLS AND ABBREVIATIONS, SEE DRAWING E-001.
2. FOR PANEL SCHEDULES, SEE DRAWINGS IN THE E500 SERIES.
3. REFER TO TELECOM DRAWINGS FOR EXACT LOCATION AND QUANTITY OF TELECOM DEVICES.
4. REFER TO FIRE ALARM DRAWINGS FOR EXACT LOCATION AND QUANTITY OF FIRE ALARM DEVICES.
5. REFER TO SECURITY DRAWINGS FOR EXACT LOCATION AND QUANTITY OF SECURITY DEVICES.
6. REFER TO MECHANICAL AND PLUMBING DRAWINGS FOR EXACT EQUIPMENT SIZE AND LOCATION.
7. REFER TO DRAWING E-600-2 FOR FEEDER SIZES OF MECHANICAL EQUIPMENT. (TYPICAL)
8. ALL RECEPTACLES LOCATED WITHIN SIX FEET OF A SINK SHALL BE OF THE GFI TYPE.
9. ALL JUNCTION BOXES FOR FIRE SMOKE DAMPERS (FSD) SHALL BE CIRCUITED FROM 120V LIFE SAFETY PANEL LP-LS_A2. CONNECTION OF MOTORIZED DAMPERS SHALL NOT EXCEED 4 PER CIRCUIT
10. PROVIDE ONE (1) GFI RECEPTACLE PER BATHROOM MOUNTED AT 3'-6" AFF.

KEY NOTES:

1. PROVIDE JUNCTION BOX AND FINAL CONNECTION FOR FAUCET TRANSFORMER. COORDINATE LOCATION WITH PLUMBING DRAWINGS.
2. PROVIDE JUNCTION BOX AND FINAL CONNECTION FOR TOILET TRANSFORMER. COORDINATE LOCATION WITH PLUMBING DRAWINGS.
3. NOT USED.
4. PROVIDE JUNCTION BOX AND FINAL CONNECTION FOR HEAT TRACE CIRCUITS. REFER TO PLUMBING DRAWINGS FOR LOCATION OF PIPING TO BE HEAT TRACED.
5. PROVIDE JUNCTION BOX AND FINAL CONNECTION FOR TRAP PRIMER. REFER TO PLUMBING DRAWINGS FOR LOCATION.

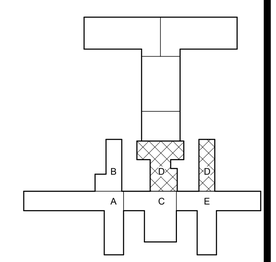

PROJECT NORTH

0 4' 8' 16'
SCALE: 1/8" = 1'-0"

1 BASEMENT POWER PLAN

REVISED DRAWING 09/24/2015

NEW YORK STATE OF OPPORTUNITY. Office of General Services

DESIGN & CONSTRUCTION

CONSULTANTS:

RBSD ARCHITECTS P.C. | STV 100 Years

A Joint Venture
225 Park Avenue South
New York, New York 10003

WARNING:
THE ALTERATION OF THIS MATERIAL IN ANY WAY, UNLESS DONE UNDER THE DIRECTION OF A COMPARABLE PROFESSIONAL, I.E. ARCHITECT FOR AN ARCHITECT, ENGINEER FOR AN ENGINEER OR LANDSCAPE ARCHITECT FOR A LANDSCAPE ARCHITECT, IS A VIOLATION OF THE NEW YORK STATE EDUCATION LAW AND/OR REGULATIONS AND IS A CLASS 'A' MISDEMEANOR.

CONTRACT: CONSTRUCTION

TITLE: MAJOR BUILDING RENOVATIONS FOR THE MANHATTAN FORENSIC RELOCATION

LOCATION: MANHATTAN PSYCHIATRIC CENTER, BUILDING No. 102
600 EAST 125TH STREET WARDS ISLAND, NY 10035

CLIENT: NYS OFFICE OF MENTAL HEALTH

MARK	DATE	DESCRIPTION
8	09/24/2015	ADDENDUM 8
	6-15-2015	BID DOCUMENT

PROJECT NUMBER:	44578
DESIGNED BY:	JN
DRAWN BY:	SA
FIELD CHECK:	NA
APPROVED:	FT

SHEET TITLE:
ELECTRICAL BASEMENT POWER PLAN, PART D

BUILDING NUMBER: 102

DRAWING NUMBER: E-100-2D

SHEET

9/22/2015 12:53:31 PM

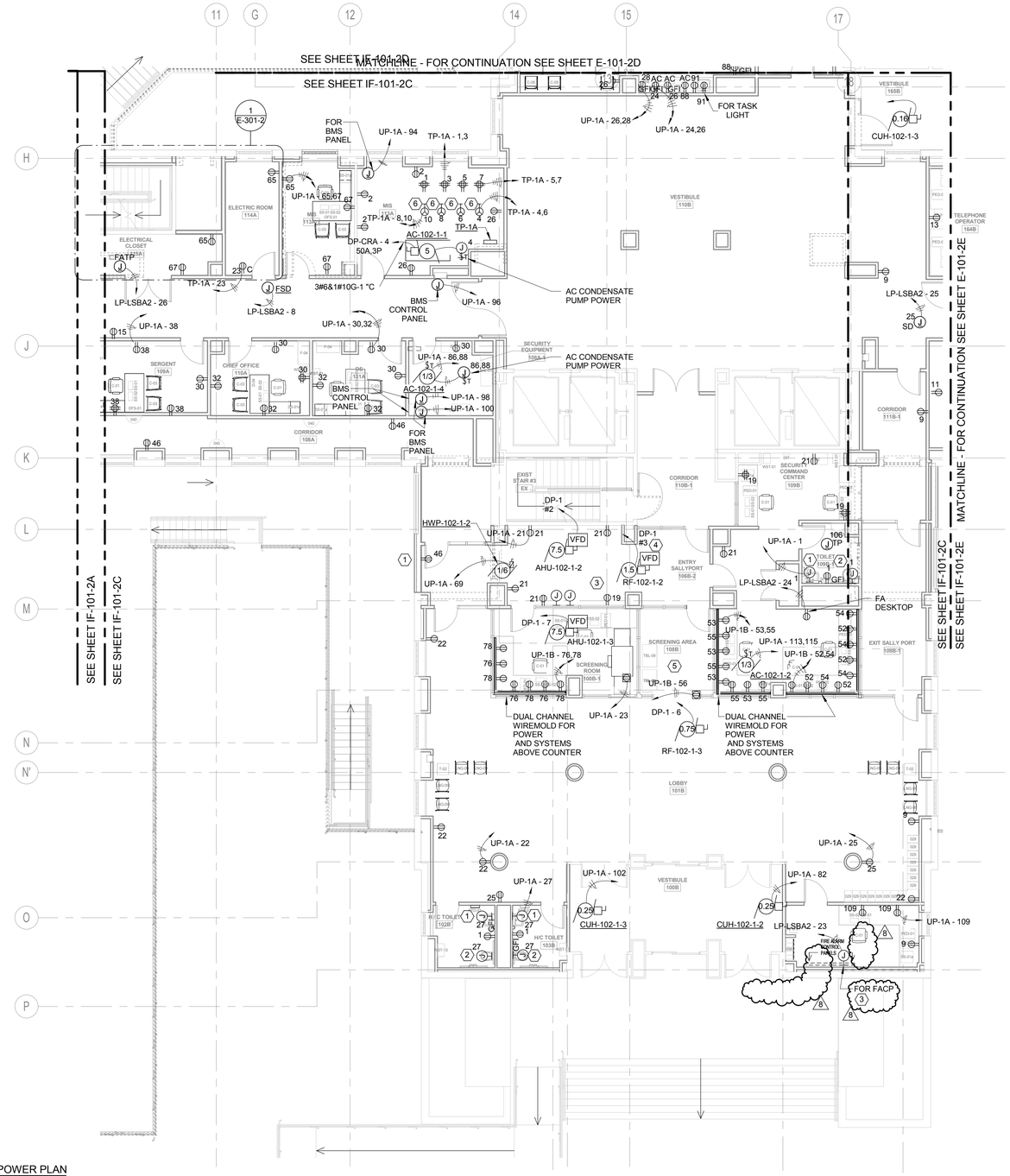

1 FIRST FLOOR POWER PLAN

NOTES:

1. FOR SYMBOLS AND ABBREVIATIONS, SEE DRAWING E-001.
2. FOR PANEL SCHEDULES, SEE DRAWINGS IN THE E500 SERIES.
3. REFER TO TELECOM DRAWINGS FOR EXACT LOCATION AND QUANTITY OF TELECOM DEVICES.
4. REFER TO FIRE ALARM DRAWINGS FOR EXACT LOCATION AND QUANTITY OF FIRE ALARM DEVICES.
5. REFER TO SECURITY DRAWINGS FOR EXACT LOCATION AND QUANTITY OF SECURITY DEVICES.
6. REFER TO MECHANICAL AND PLUMBING DRAWINGS FOR EXACT EQUIPMENT SIZE AND LOCATION.
7. REFER TO DRAWING E-600-2 FOR FEEDER SIZES OF MECHANICAL EQUIPMENT. (TYPICAL)
8. ALL RECEPTACLES LOCATED WITHIN SIX FEET OF A SINK SHALL BE OF THE GFI TYPE.
9. ALL JUNCTION BOXES FOR FIRE SMOKE DAMPERS (FSD) SHALL BE3'-6" CIRCUITED FROM 120V LIFE SAFETY PANEL LP-LS_A2. CONNECTION OF MOTORIZED DAMPERS SHALL NOT EXCEED 4 PER CIRCUIT
10. ALL PREWIRED FURNITURE FEEDS SHALL BE COORDINATED WITH THE FINAL APPROVED FURNITURE SHOP DRAWINGS PRIOR TO ROUGH IN.

KEY NOTES:

1. PROVIDE JUNCTION BOX AND FINAL CONNECTION FOR FAUCET TRANSFORMER. COORDINATE LOCATION WITH PLUMBING DRAWINGS.
2. PROVIDE JUNCTION BOX AND FINAL CONNECTION FOR TOILET TRANSFORMER. COORDINATE LOCATION WITH PLUMBING DRAWINGS.
3. PROVIDE 1-20A DEDICATED CIRCUIT TO NEAREST LIFE SAFETY PANEL (LP-LS) FOR FIRE ALARM CONTROL PANEL
4. PROVIDE WIREMOLD WITH (2) DEDICATED CIRCUITS TO PANEL LP-CRBA FOR COMMAND CENTER.
5. PROVIDE WIREMOLD WITH (1) DEDICATED CIRCUIT TO PANEL LP-CRBA FOR DUTY STATION.
6. PROVIDE 30A,1P NEMA L5-30R TWISTLOCK RECEPTACLE WITH 2#10 & 1#10G-3/4"C.

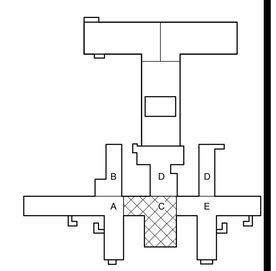

PROJECT NORTH

0 4' 8' 16'
SCALE: 1/8" = 1'-0"

REVISED DRAWING 09/24/2015

NEW YORK STATE OF OPPORTUNITY. Office of General Services

DESIGN & CONSTRUCTION

CONSULTANTS:

RBSD ARCHITECTS P.C. | STV 100 Years

A Joint Venture
225 Park Avenue South
New York, New York 10003

WARNING:
THE ALTERATION OF THIS MATERIAL IN ANY WAY, UNLESS DONE UNDER THE DIRECTION OF A COMPARABLE PROFESSIONAL, I.E. ARCHITECT FOR AN ARCHITECT, ENGINEER FOR AN ENGINEER OR LANDSCAPE ARCHITECT FOR A LANDSCAPE ARCHITECT, IS A VIOLATION OF THE NEW YORK STATE EDUCATION LAW AND/OR REGULATIONS AND IS A CLASS 'A' MISDEMEANOR.

CONTRACT: CONSTRUCTION

TITLE: MAJOR BUILDING RENOVATIONS FOR THE MANHATTAN FORENSIC RELOCATION

LOCATION: MANHATTAN PSYCHIATRIC CENTER, BUILDING No. 102
600 EAST 125TH STREET WARDS ISLAND, NY 10035

CLIENT: NYS OFFICE OF MENTAL HEALTH

MARK	DATE	DESCRIPTION
8	09/24/2015	ADDENDUM 8
	6-15-2015	BID DOCUMENT

PROJECT NUMBER:	44578
DESIGNED BY:	JN
DRAWN BY:	SA
FIELD CHECK:	NA
APPROVED:	FT

SHEET TITLE:
ELECTRICAL FIRST FLOOR POWER PLAN, PART C

BUILDING NUMBER: 102

DRAWING NUMBER: E-101-2C

SHEET

9/22/2015 12:53:43 PM

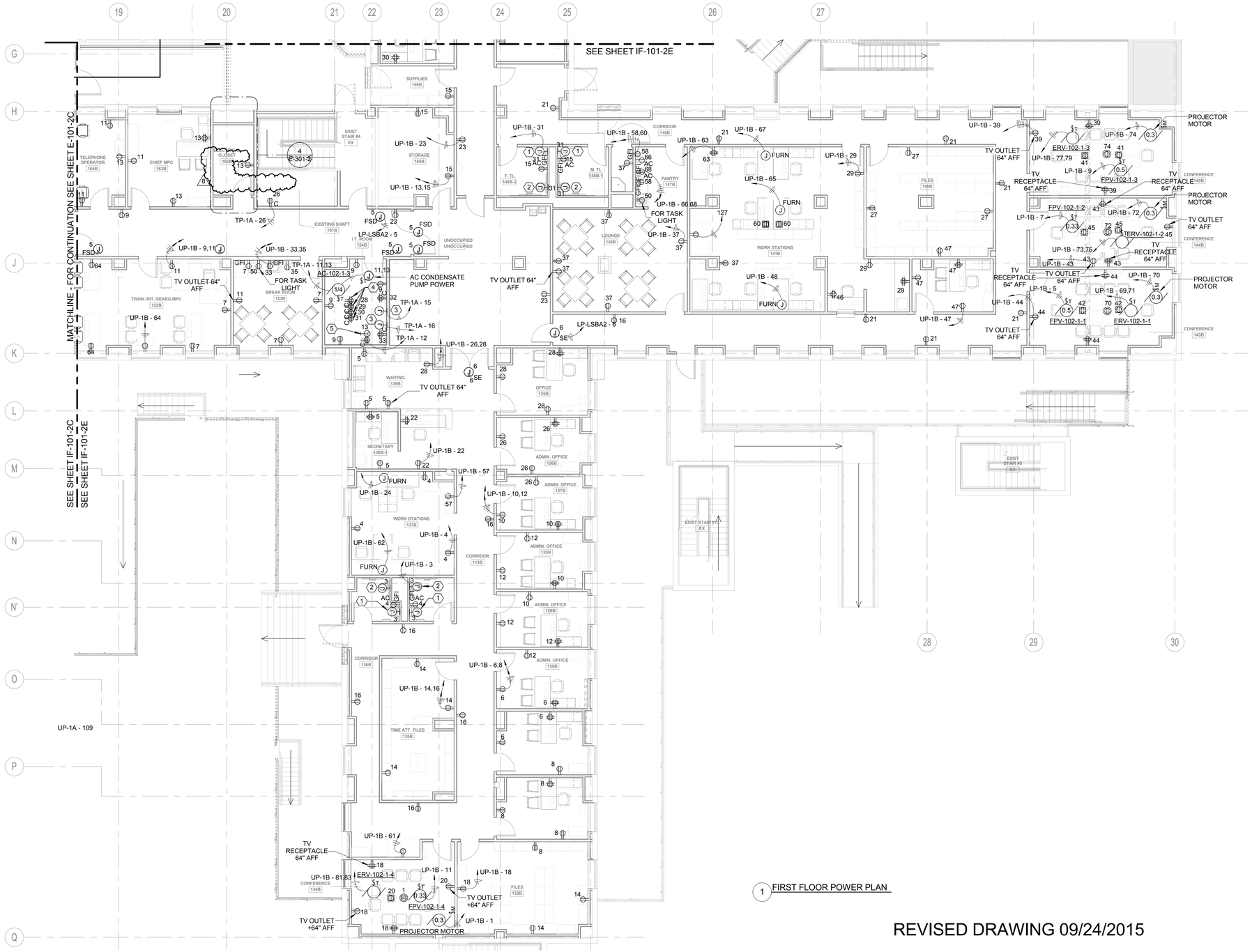

1 FIRST FLOOR POWER PLAN

REVISED DRAWING 09/24/2015

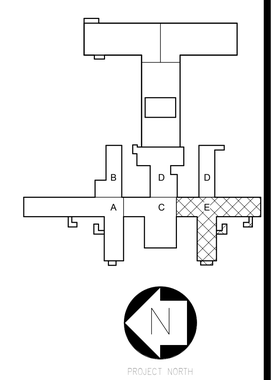

NOTES:

1. FOR SYMBOLS AND ABBREVIATIONS, SEE DRAWING E-001.
2. FOR PANEL SCHEDULES, SEE DRAWINGS IN THE E500 SERIES.
3. REFER TO TELECOM DRAWINGS FOR EXACT LOCATION AND QUANTITY OF TELECOM DEVICES.
4. REFER TO FIRE ALARM DRAWINGS FOR EXACT LOCATION AND QUANTITY OF FIRE ALARM DEVICES.
5. REFER TO SECURITY DRAWINGS FOR EXACT LOCATION AND QUANTITY OF SECURITY DEVICES.
6. REFER TO MECHANICAL AND PLUMBING DRAWINGS FOR EXACT EQUIPMENT SIZE AND LOCATION.
7. REFER TO DRAWING E-600-2 FOR FEEDER SIZES OF MECHANICAL EQUIPMENT. (TYPICAL)
8. ALL RECEPTACLES LOCATED WITHIN SIX FEET OF A SINK SHALL BE OF THE GFI TYPE.
9. ALL JUNCTION BOXES FOR FIRE SMOKE DAMPERS (FSD) SHALL BE CIRCUITED FROM 120V LIFE SAFETY PANEL LP-LS_A2. CONNECTION OF MOTORIZED DAMPERS SHALL NOT EXCEED 4 PER CIRCUIT
10. PROVIDE ONE (1) GFI RECEPTACLE PER BATHROOM MOUNTED AT 3'-6" AFF.
11. ALL PREWIRED FURNITURE FEEDS SHALL BE COORDINATED WITH THE FINAL APPROVED FURNITURE SHOP DRAWINGS PRIOR TO ROUGH IN.

KEY NOTES:

1. PROVIDE JUNCTION BOX AND FINAL CONNECTION FOR FAUCET TRANSFORMER. COORDINATE LOCATION WITH PLUMBING DRAWINGS.
2. PROVIDE JUNCTION BOX AND FINAL CONNECTION FOR TOILET TRANSFORMER. COORDINATE LOCATION WITH PLUMBING DRAWINGS.
3. PROVIDE 1-20A DEDICATED CIRCUIT TO THE NEAREST CRITICAL PANEL (LP-CR) FOR EACH JUNCTION BOX SERVING INTRUSION DETECTION, PAS TRANSPONDER, ACCESS CONTROL, AND CCTV. SEE SECURITY DRAWINGS FOR EXACT LOCATIONS AND EQUIPMENT INFORMATION.
4. RECEPTACLES SHALL BE MOUNTED ON SECURITY RACK IN ROOM.
5. PROVIDE 30A,1P NEMA L5-30R TWISTLOCK RECEPTACLE WITH 2#10 & 1#10G-3/4"C.

NEW YORK STATE OF OPPORTUNITY. Office of General Services

DESIGN & CONSTRUCTION

CONSULTANTS:

RBSD ARCHITECTS P.C. | STV 100 Years

A Joint Venture

225 Park Avenue South
New York, New York 10003

WARNING:
THE ALTERATION OF THIS MATERIAL IN ANY WAY, UNLESS DONE UNDER THE DIRECTION OF A COMPARABLE PROFESSIONAL, I.E. ARCHITECT FOR AN ARCHITECT, ENGINEER FOR AN ENGINEER OR LANDSCAPE ARCHITECT FOR A LANDSCAPE ARCHITECT, IS A VIOLATION OF THE NEW YORK STATE EDUCATION LAW AND/OR REGULATIONS AND IS A CLASS 'A' MISDEMEANOR.

CONTRACT: CONSTRUCTION

TITLE: MAJOR BUILDING RENOVATIONS FOR THE MANHATTAN FORENSIC RELOCATION

LOCATION: MANHATTAN PSYCHIATRIC CENTER, BUILDING No. 102
600 EAST 125TH STREET WARDS ISLAND, NY 10035

CLIENT: NYS OFFICE OF MENTAL HEALTH

MARK	DATE	DESCRIPTION
8	09/24/2015	ADDENDUM 8
	6-15-2015	BID DOCUMENT

PROJECT NUMBER:	44578
DESIGNED BY:	JN
DRAWN BY:	SA
FIELD CHECK:	NA
APPROVED:	FT

SHEET TITLE:

ELECTRICAL FIRST FLOOR POWER PLAN, PART E

BUILDING NUMBER: 102

DRAWING NUMBER: E-101-2E

SHEET

9/22/2015 12:53:57 PM

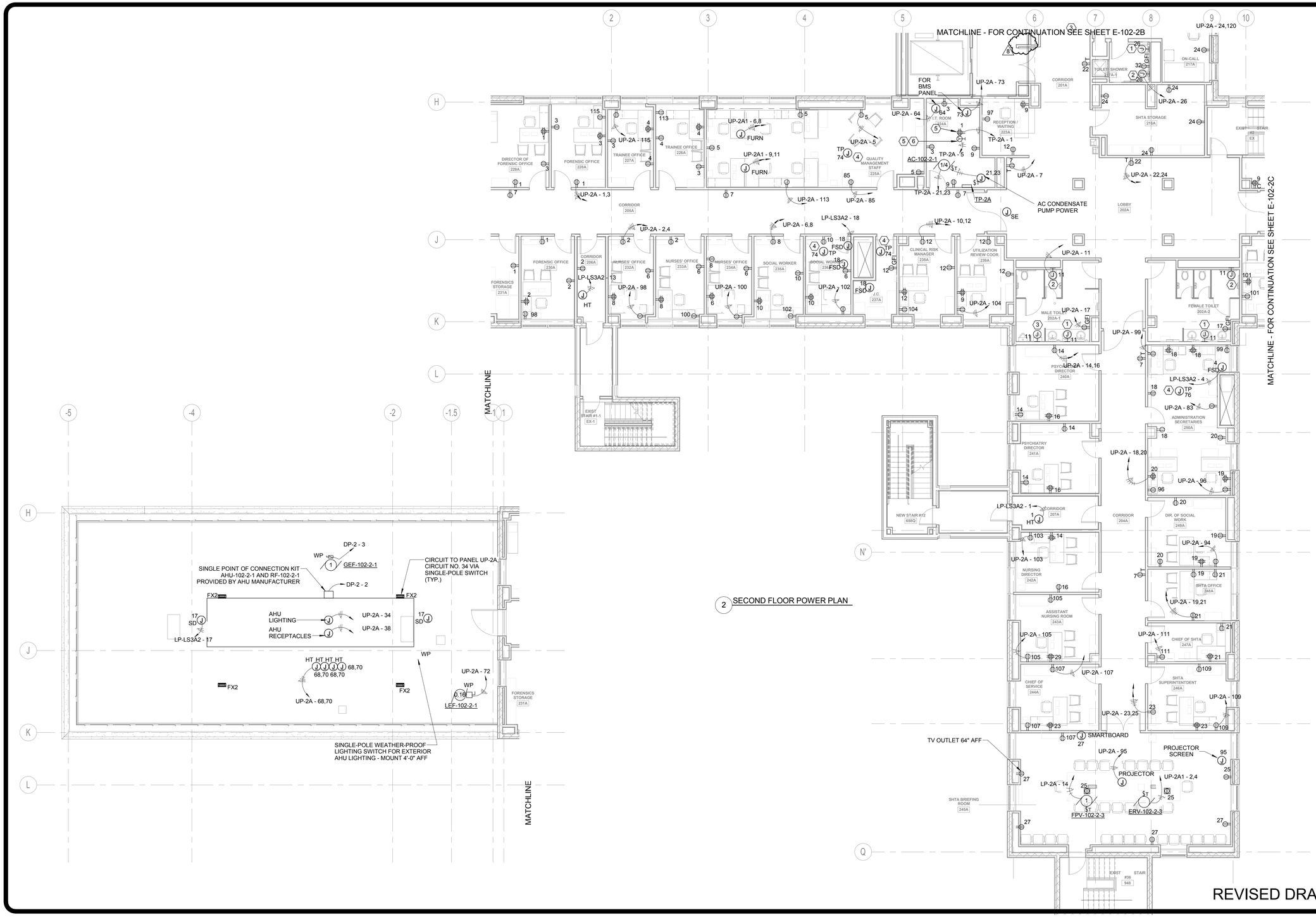

2 SECOND FLOOR POWER PLAN

NOTES:

1. FOR SYMBOLS AND ABBREVIATIONS, SEE DRAWING E-001.
2. FOR PANEL SCHEDULES, SEE DRAWINGS IN THE E500 SERIES.
3. REFER TO TELECOM DRAWINGS FOR EXACT LOCATION AND QUANTITY OF TELECOM DEVICES.
4. REFER TO FIRE ALARM DRAWINGS FOR EXACT LOCATION AND QUANTITY OF FIRE ALARM DEVICES.
5. REFER TO SECURITY DRAWINGS FOR EXACT LOCATION AND QUANTITY OF SECURITY DEVICES.
6. REFER TO MECHANICAL AND PLUMBING DRAWINGS FOR EXACT EQUIPMENT SIZE AND LOCATION.
7. REFER TO DRAWING E-600-2 FOR FEEDER SIZES OF MECHANICAL EQUIPMENT. (TYPICAL)
8. ALL RECEPTACLES LOCATED WITHIN SIX FEET OF A SINK SHALL BE OF THE GFI TYPE.
9. ALL JUNCTION BOXES FOR FIRE SMOKE DAMPERS (FSD) SHALL BE3'-6" CIRCUITED FROM 120V LIFE SAFETY PANEL LP-LS_A2. CONNECTION OF MOTORIZED DAMPERS SHALL NOT EXCEED 4 PER CIRCUIT
10. ALL PREWIRED FURNITURE FEEDS SHALL BE COORDINATED WITH THE FINAL APPROVED FURNITURE SHOP DRAWINGS PRIOR TO ROUGH IN.

KEY NOTES:

1. PROVIDE JUNCTION BOX AND FINAL CONNECTION FOR FAUCET TRANSFORMER. COORDINATE LOCATION WITH PLUMBING DRAWINGS.
2. PROVIDE JUNCTION BOX AND FINAL CONNECTION FOR TOILET TRANSFORMER. COORDINATE LOCATION WITH PLUMBING DRAWINGS.
3. PROVIDE JUNCTION BOX FOR URINAL TRANSFORMER. COORDINATE LOCATION WITH PLUMBING DRAWINGS.
4. PROVIDE JUNCTION BOX FOR TRAP PRIMER. COORDINATE LOCATION WITH PLUMBING DRAWINGS.
5. RECEPTACLES SHALL BE MOUNTED ON CABLE TRAY ABOVE THE DATA RACKS.
6. PROVIDE 30A,1P NEMA L5-30R TWISTLOCK RECEPTACLE WITH 2#10 & 1#10G-3/4"C.

REVISED DRAWING 09/24/2015

NEW YORK STATE OF OPPORTUNITY. Office of General Services

DESIGN & CONSTRUCTION

CONSULTANTS:

RBSD ARCHITECTS P.C. | STV 100 Years

A Joint Venture

225 Park Avenue South
New York, New York 10003

WARNING:
THE ALTERATION OF THIS MATERIAL IN ANY WAY, UNLESS DONE UNDER THE DIRECTION OF A COMPARABLE PROFESSIONAL, I.E. ARCHITECT FOR AN ARCHITECT, ENGINEER FOR AN ENGINEER OR LANDSCAPE ARCHITECT FOR A LANDSCAPE ARCHITECT, IS A VIOLATION OF THE NEW YORK STATE EDUCATION LAW AND/OR REGULATIONS AND IS A CLASS 'A' MISDEMEANOR.

CONTRACT: CONSTRUCTION

TITLE: MAJOR BUILDING RENOVATIONS FOR THE MANHATTAN FORENSIC RELOCATION

LOCATION: MANHATTAN PSYCHIATRIC CENTER, BUILDING No. 102
600 EAST 125TH STREET WARDS ISLAND, NY 10035

CLIENT: NYS OFFICE OF MENTAL HEALTH

MARK	DATE	DESCRIPTION
8	09/24/2015	ADDENDUM 8
	6-15-2015	BID DOCUMENT

PROJECT NUMBER:	44578
DESIGNED BY:	JN
DRAWN BY:	SA
FIELD CHECK:	NA
APPROVED:	FT

SHEET TITLE: ELECTRICAL SECOND FLOOR POWER PLAN, PART A

BUILDING NUMBER: 102

DRAWING NUMBER: E-102-2A

SHEET

9/22/2015 12:54:12 PM

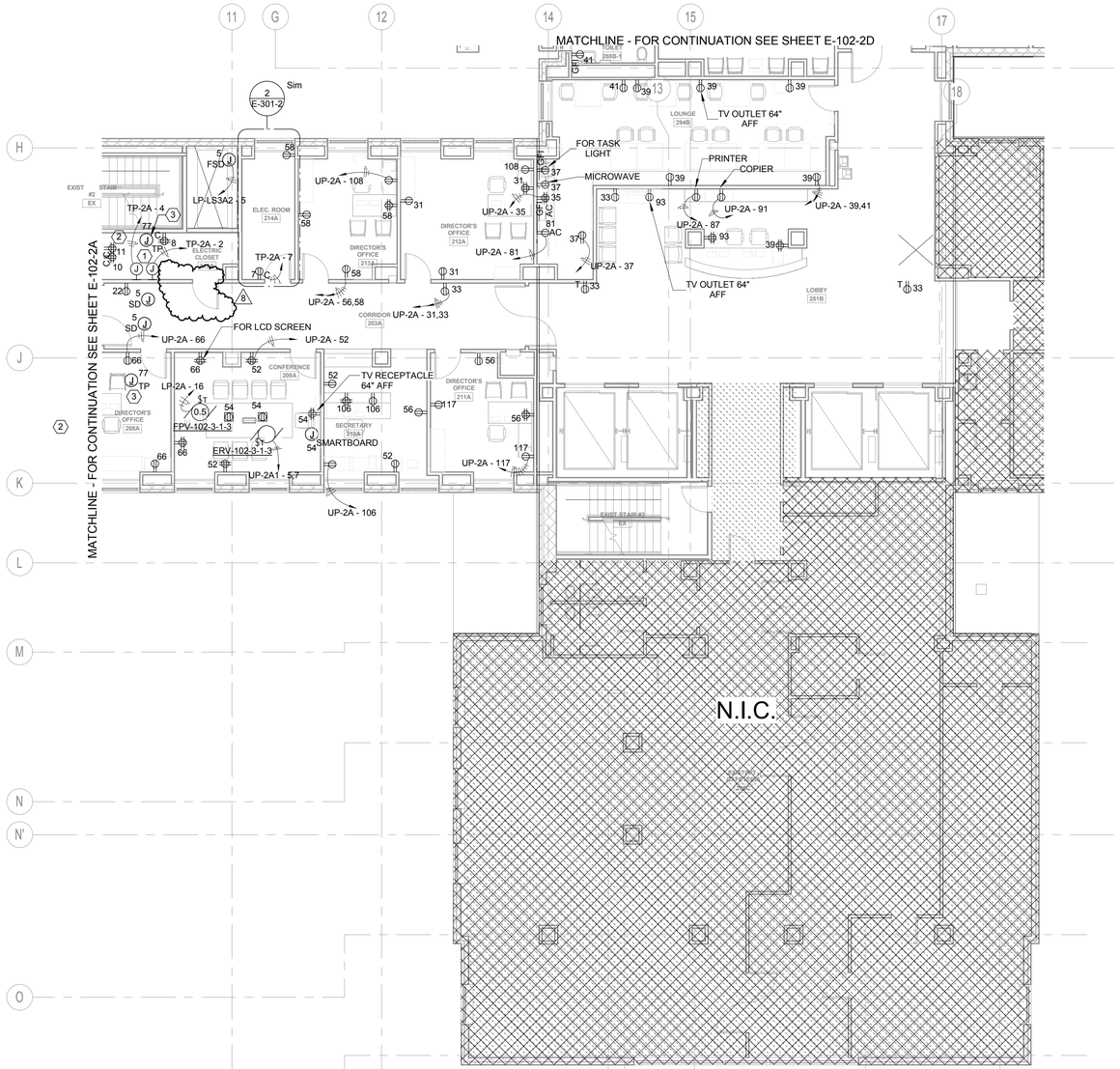

1 SECOND FLOOR POWER PLAN

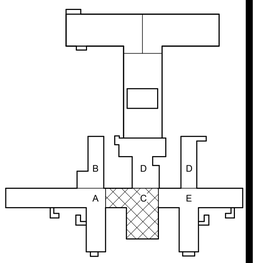

PROJECT NORTH

0 4' 8' 16'
SCALE: 1/8" = 1'-0"

REVISED DRAWING 09/24/2015

NOTES:

1. FOR SYMBOLS AND ABBREVIATIONS, SEE DRAWING E-001.
2. FOR PANEL SCHEDULES, SEE DRAWINGS IN THE E500 SERIES.
3. REFER TO TELECOM DRAWINGS FOR EXACT LOCATION AND QUANTITY OF TELECOM DEVICES.
4. REFER TO FIRE ALARM DRAWINGS FOR EXACT LOCATION AND QUANTITY OF FIRE ALARM DEVICES.
5. REFER TO SECURITY DRAWINGS FOR EXACT LOCATION AND QUANTITY OF SECURITY DEVICES.
6. REFER TO MECHANICAL AND PLUMBING DRAWINGS FOR EXACT EQUIPMENT SIZE AND LOCATION.
7. REFER TO DRAWING E-600-2 FOR FEEDER SIZES OF MECHANICAL EQUIPMENT. (TYPICAL)
8. ALL RECEPTACLES LOCATED WITHIN SIX FEET OF A SINK SHALL BE OF THE GFI TYPE.
9. ALL JUNCTION BOXES FOR FIRE SMOKE DAMPERS (FSD) SHALL BE3'-6" CIRCUITED FROM 120V LIFE SAFETY PANEL LP-LS_A2. CONNECTION OF MOTORIZED DAMPERS SHALL NOT EXCEED 4 PER CIRCUIT
10. ALL PREWIRED FURNITURE FEEDS SHALL BE COORDINATED WITH THE FINAL APPROVED FURNITURE SHOP DRAWINGS PRIOR TO ROUGH IN.

KEY NOTES:

1. PROVIDE 1-20A DEDICATED CIRCUIT FROM NEAREST CRITICAL PANEL (LP-CR) FOR EACH JUNCTION BOX SERVING INTRUSION DETECTION, PAS TRANSPONDER, ACCESS CONTROL, AND CCTV. SEE SECURITY DRAWINGS FOR EXACT LOCATIONS AND EQUIPMENT INFORMATION.
2. RECEPTACLES SHALL BE MOUNTED ON SECURITY RACK.
3. PROVIDE JUNCTION BOX AND FINAL CONNECTION FOR TRAP PRIMER. COORDINATE LOCATION WITH PLUMBING DRAWINGS.

NEW YORK STATE OF OPPORTUNITY. Office of General Services

DESIGN & CONSTRUCTION

CONSULTANTS:

RBSD ARCHITECTS P.C. | STV 100 Years

A Joint Venture

225 Park Avenue South
New York, New York 10003

WARNING:
THE ALTERATION OF THIS MATERIAL IN ANY WAY, UNLESS DONE UNDER THE DIRECTION OF A COMPARABLE PROFESSIONAL, I.E. ARCHITECT FOR AN ARCHITECT, ENGINEER FOR AN ENGINEER OR LANDSCAPE ARCHITECT FOR A LANDSCAPE ARCHITECT, IS A VIOLATION OF THE NEW YORK STATE EDUCATION LAW AND/OR REGULATIONS AND IS A CLASS 'A' MISDEMEANOR.

CONTRACT:
CONSTRUCTION

TITLE:
MAJOR BUILDING RENOVATIONS FOR THE MANHATTAN FORENSIC RELOCATION

LOCATION:
MANHATTAN PSYCHIATRIC CENTER, BUILDING No. 102
600 EAST 125TH STREET WARDS ISLAND, NY 10035

CLIENT:
NYS OFFICE OF MENTAL HEALTH

MARK	DATE	DESCRIPTION
8	09/24/2015	ADDENDUM 8
6	9-3-2015	ADDENDUM 6
	6-15-2015	BID DOCUMENT

PROJECT NUMBER:	44578
DESIGNED BY:	JN
DRAWN BY:	SA
FIELD CHECK:	NA
APPROVED:	FT

SHEET TITLE:
ELECTRICAL SECOND FLOOR POWER PLAN, PART C

BUILDING NUMBER: 102

DRAWING NUMBER: E-102-2C

SHEET

9/22/2015 12:54:22 PM

NOTES:

1. FOR SYMBOLS AND ABBREVIATIONS, SEE DRAWING E-001.
2. FOR PANEL SCHEDULES, SEE DRAWINGS IN THE E500 SERIES.
3. REFER TO TELECOM DRAWINGS FOR EXACT LOCATION AND QUANTITY OF TELECOM DEVICES.
4. REFER TO FIRE ALARM DRAWINGS FOR EXACT LOCATION AND QUANTITY OF FIRE ALARM DEVICES.
5. REFER TO SECURITY DRAWINGS FOR EXACT LOCATION AND QUANTITY OF SECURITY DEVICES.
6. REFER TO MECHANICAL AND PLUMBING DRAWINGS FOR EXACT EQUIPMENT SIZE AND LOCATION.
7. REFER TO DRAWING E-600-2 FOR FEEDER SIZES OF MECHANICAL EQUIPMENT. (TYPICAL)
8. ALL RECEPTACLES LOCATED WITHIN SIX FEET OF A SINK SHALL BE OF THE GFI TYPE.
9. ALL JUNCTION BOXES FOR FIRE SMOKE DAMPERS (FSD) SHALL BE 3'-6" CIRCUITED FROM 120V LIFE SAFETY PANEL LP-LS_A2. CONNECTION OF MOTORIZED DAMPERS SHALL NOT EXCEED 4 PER CIRCUIT
10. ALL PREWIRED FURNITURE FEEDS SHALL BE COORDINATED WITH THE FINAL APPROVED FURNITURE SHOP DRAWINGS PRIOR TO ROUGH IN.

KEY NOTES:

1. PROVIDE JUNCTION BOX AND FINAL CONNECTION FOR FAUCET TRANSFORMER. COORDINATE LOCATION WITH PLUMBING DRAWINGS.
2. PROVIDE JUNCTION BOX AND FINAL CONNECTION FOR TOILET TRANSFORMER. COORDINATE LOCATION WITH PLUMBING DRAWINGS.

1 SECOND FLOOR POWER PLAN

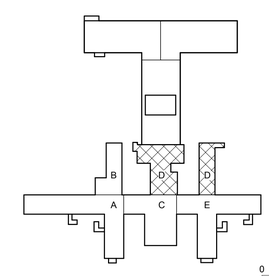

PROJECT NORTH

0 4' 8' 16'
SCALE: 1/8" = 1'-0"

REVISED DRAWING 09/24/2015

NEW YORK STATE OF OPPORTUNITY. Office of General Services

DESIGN & CONSTRUCTION

CONSULTANTS:

RBSD ARCHITECTS P.C. | STV 100 Years

A Joint Venture

225 Park Avenue South
New York, New York 10003

WARNING:
THE ALTERATION OF THIS MATERIAL IN ANY WAY, UNLESS DONE UNDER THE DIRECTION OF A COMPARABLE PROFESSIONAL, I.E. ARCHITECT FOR AN ARCHITECT, ENGINEER FOR AN ENGINEER OR LANDSCAPE ARCHITECT FOR A LANDSCAPE ARCHITECT, IS A VIOLATION OF THE NEW YORK STATE EDUCATION LAW AND/OR REGULATIONS AND IS A CLASS 'A' MISDEMEANOR.

CONTRACT: CONSTRUCTION

TITLE: MAJOR BUILDING RENOVATIONS FOR THE MANHATTAN FORENSIC RELOCATION

LOCATION: MANHATTAN PSYCHIATRIC CENTER, BUILDING No. 102
600 EAST 125TH STREET WARDS ISLAND, NY 10035

CLIENT: NYS OFFICE OF MENTAL HEALTH

MARK	DATE	DESCRIPTION
8	09/24/2015	ADDENDUM 8
	6-15-2015	BID DOCUMENT

PROJECT NUMBER:	44578
DESIGNED BY:	JN
DRAWN BY:	SA
FIELD CHECK:	NA
APPROVED:	FT

SHEET TITLE: ELECTRICAL SECOND FLOOR POWER PLAN, PART D

BUILDING NUMBER: 102

DRAWING NUMBER: E-102-2D

SHEET

9/22/2015 12:54:32 PM

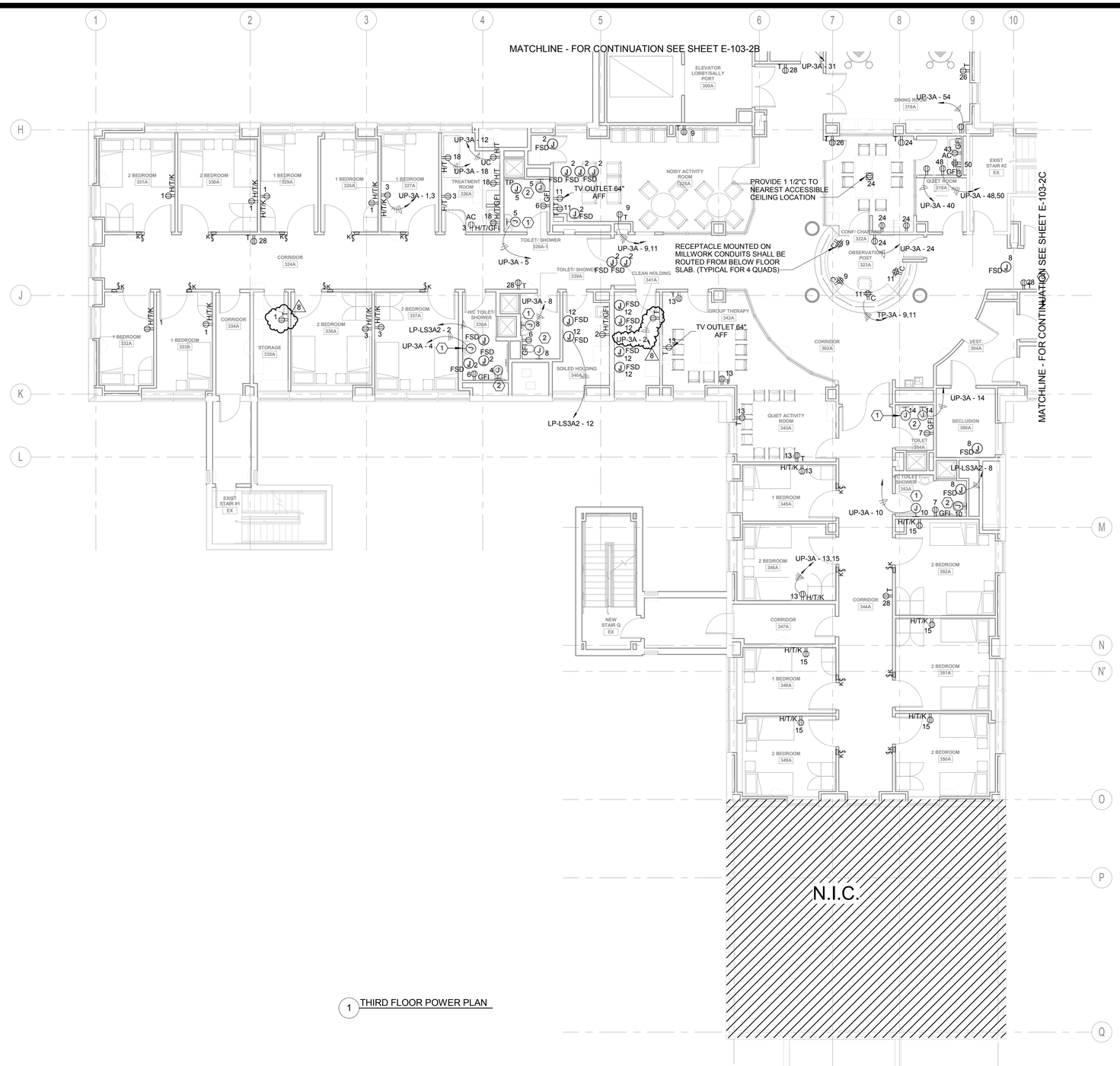

1 THIRD FLOOR POWER PLAN

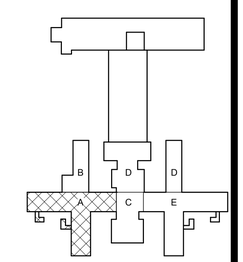

PROJECT NORTH

0 4' 8' 16'
SCALE: 1/8" = 1'-0"

REVISED DRAWING 09/24/2015

NOTES:

1. FOR SYMBOLS AND ABBREVIATIONS, SEE DRAWING E-001.
2. FOR PANEL SCHEDULES, SEE DRAWINGS IN THE E500 SERIES.
3. REFER TO TELECOM DRAWINGS FOR EXACT LOCATION AND QUANTITY OF TELECOM DEVICES.
4. REFER TO FIRE ALARM DRAWINGS FOR EXACT LOCATION AND QUANTITY OF FIRE ALARM DEVICES.
5. REFER TO SECURITY DRAWINGS FOR EXACT LOCATION AND QUANTITY OF SECURITY DEVICES.
6. REFER TO MECHANICAL AND PLUMBING DRAWINGS FOR EXACT EQUIPMENT SIZE AND LOCATION.
7. REFER TO DRAWING E-600-2 FOR FEEDER SIZES OF MECHANICAL EQUIPMENT. (TYPICAL)
8. ALL RECEPTACLES LOCATED WITHIN SIX FEET OF A SINK SHALL BE OF THE GFI TYPE.
9. ALL JUNCTION BOXES FOR FIRE SMOKE DAMPERS (FSD) SHALL BE CIRCUITED FROM 120V LIFE SAFETY PANEL LP-LS_A2. CONNECTION OF MOTORIZED DAMPERS SHALL NOT EXCEED 4 PER CIRCUIT

KEY NOTES:

1. PROVIDE JUNCTION BOX AND FINAL CONNECTION FOR FAUCET TRANSFORMER. COORDINATE LOCATION WITH PLUMBING DRAWINGS.
2. PROVIDE JUNCTION BOX AND FINAL CONNECTION FOR TOILET TRANSFORMER. COORDINATE LOCATION WITH PLUMBING DRAWINGS.

NEW YORK STATE OF OPPORTUNITY. | Office of General Services

DESIGN & CONSTRUCTION

CONSULTANTS:

RBSD ARCHITECTS P.C. | STV 100 Years

A Joint Venture

225 Park Avenue South
New York, New York 10003

WARNING:
THE ALTERATION OF THIS MATERIAL IN ANY WAY, UNLESS DONE UNDER THE DIRECTION OF A COMPARABLE PROFESSIONAL, I.E. ARCHITECT FOR AN ARCHITECT, ENGINEER FOR AN ENGINEER OR LANDSCAPE ARCHITECT FOR A LANDSCAPE ARCHITECT, IS A VIOLATION OF THE NEW YORK STATE EDUCATION LAW AND/OR REGULATIONS AND IS A CLASS 'A' MISDEMEANOR.

CONTRACT: CONSTRUCTION

TITLE: MAJOR BUILDING RENOVATIONS FOR THE MANHATTAN FORENSIC RELOCATION

LOCATION: MANHATTAN PSYCHIATRIC CENTER, BUILDING No. 102
600 EAST 125TH STREET WARDS ISLAND, NY 10035

CLIENT: NYS OFFICE OF MENTAL HEALTH

MARK	DATE	DESCRIPTION
8	09/24/2015	ADDENDUM 8
6	9-3-2015	ADDENDUM 6
	6-15-2015	BID DOCUMENT

PROJECT NUMBER:	44578
DESIGNED BY:	JN
DRAWN BY:	SA
FIELD CHECK:	NA
APPROVED:	FT

SHEET TITLE:
ELECTRICAL THIRD FLOOR POWER PLAN, PART A

BUILDING NUMBER: 102

DRAWING NUMBER: E-103-2A

SHEET

9/22/2015 12:54:44 PM

NOTES:

1. FOR SYMBOLS AND ABBREVIATIONS, SEE DRAWING E-001.
2. FOR PANEL SCHEDULES, SEE DRAWINGS IN THE E500 SERIES.
3. REFER TO TELECOM DRAWINGS FOR EXACT LOCATION AND QUANTITY OF TELECOM DEVICES.
4. REFER TO FIRE ALARM DRAWINGS FOR EXACT LOCATION AND QUANTITY OF FIRE ALARM DEVICES.
5. REFER TO SECURITY DRAWINGS FOR EXACT LOCATION AND QUANTITY OF SECURITY DEVICES.
6. REFER TO MECHANICAL AND PLUMBING DRAWINGS FOR EXACT EQUIPMENT SIZE AND LOCATION.
7. REFER TO DRAWING E-600-2 FOR FEEDER SIZES OF MECHANICAL EQUIPMENT. (TYPICAL)
8. ALL RECEPTACLES LOCATED WITHIN SIX FEET OF A SINK SHALL BE OF THE GFI TYPE.
9. ALL JUNCTION BOXES FOR FIRE SMOKE DAMPERS (FSD) SHALL BE CIRCUITED FROM 120V LIFE SAFETY PANEL LP-LS_A2. CONNECTION OF MOTORIZED DAMPERS SHALL NOT EXCEED 4 PER CIRCUIT

KEY NOTES:

1. PROVIDE JUNCTION BOX AND FINAL CONNECTION FOR FAUCET TRANSFORMER. COORDINATE LOCATION WITH PLUMBING DRAWINGS.
2. PROVIDE JUNCTION BOX AND FINAL CONNECTION FOR TOILET TRANSFORMER. COORDINATE LOCATION WITH PLUMBING DRAWINGS.
3. PROVIDE 1-20A DEDICATED CIRCUIT FROM NEAREST CRITICAL PANEL (LP-CR) FOR EACH JUNCTION BOX SERVING PAS TRANSPONDER, ACCESS CONTROL, AND CCTV. SEE SECURITY DRAWINGS FOR EXACT LOCATIONS AND EQUIPMENT INFORMATION.
4. RECEPTACLES SHALL BE MOUNTED ON SECURITY RACK.
5. ELECTRICAL CONTRACTOR IS RESPONSIBLE FOR PROVIDING A SINGLE POINT OF CONNECTION TO EQUIPMENT. ALL REMAINING WIRING DOWNSTREAM OF A SINGLE POINT OF CONNECTION SHALL BE FURNISH AND INSTALL BY OTHERS.
6. ALL ELECTRICAL PANELS LOCATED WITHIN THE MECHANICAL ROOMS SHALL BE PROVIDED WITH THE CODE REQUIRED CLEARANCES. ELECTRICAL CONTRACTOR SHALL COORDINATE FINAL LAYOUTS WITH MECHANICAL AND PLUMBING CONTRACTORS PRIOR TO ROUGH IN. ABSOLUTELY NO PIPING, DUCT OR OTHER SYSTEMS FOREIGN TO ELECTRICAL INSTALLATION ARE ALLOW ABOVE PANELS.
7. COORDINATE LOCATION OF DISCONNECT SWITCHES WITH MECH. CONTRACTOR TO KEEP N.E.C. CLEARANCES AS REQUIRED. DISCONNECTS SHALL BE INSTALLED IN AN ACCESSIBLE LOCATION

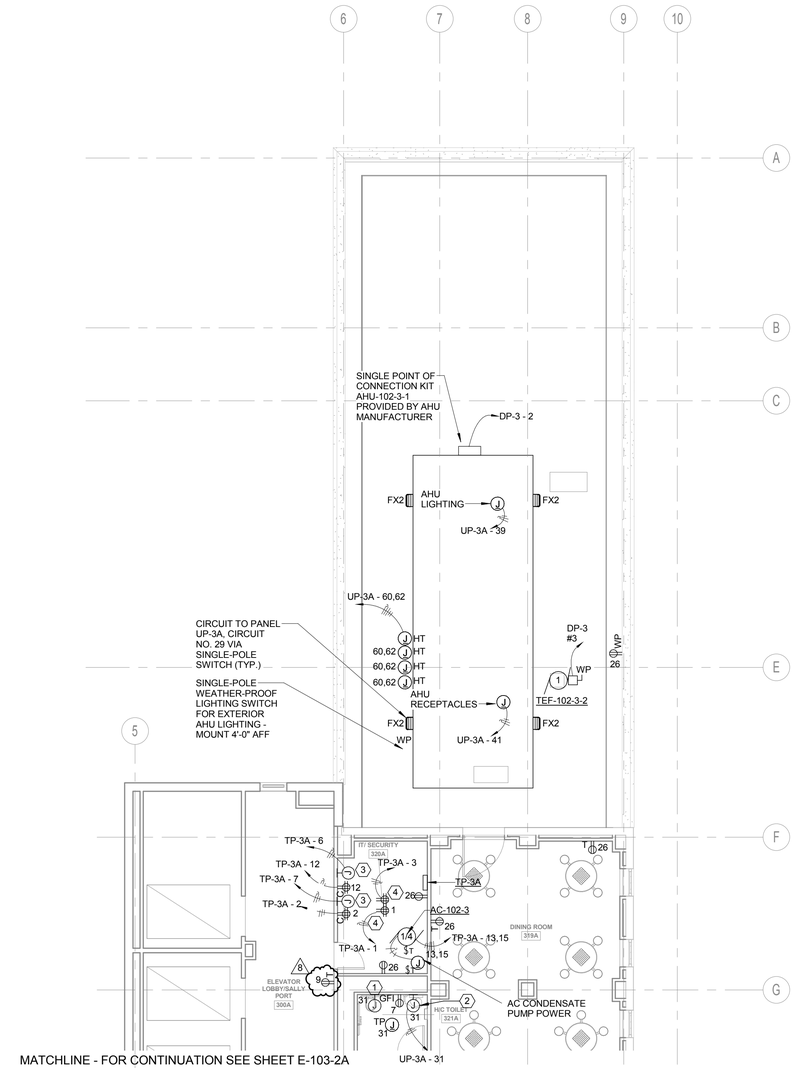

1 THIRD FLOOR POWER PLAN

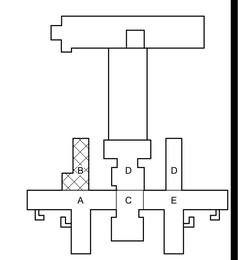

PROJECT NORTH

0 4' 8' 16'

SCALE: 1/8" = 1'-0"

REVISED DRAWING 09/24/2015

NEW YORK STATE OF OPPORTUNITY. Office of General Services

DESIGN & CONSTRUCTION

CONSULTANTS:

RBSD ARCHITECTS P.C. | STV 100 Years

A Joint Venture

225 Park Avenue South
New York, New York 10003

WARNING:
THE ALTERATION OF THIS MATERIAL IN ANY WAY, UNLESS DONE UNDER THE DIRECTION OF A COMPARABLE PROFESSIONAL, I.E. ARCHITECT FOR AN ARCHITECT, ENGINEER FOR AN ENGINEER OR LANDSCAPE ARCHITECT FOR A LANDSCAPE ARCHITECT, IS A VIOLATION OF THE NEW YORK STATE EDUCATION LAW AND/OR REGULATIONS AND IS A CLASS 'A' MISDEMEANOR.

CONTRACT: CONSTRUCTION

TITLE: MAJOR BUILDING RENOVATIONS FOR THE MANHATTAN FORENSIC RELOCATION

LOCATION: MANHATTAN PSYCHIATRIC CENTER, BUILDING No. 102
600 EAST 125TH STREET WARDS ISLAND, NY 10035

CLIENT: NYS OFFICE OF MENTAL HEALTH

MARK	DATE	DESCRIPTION
8	09/24/2015	ADDENDUM 8
6	9-3-2015	ADDENDUM 6
	6-15-2015	BID DOCUMENT

PROJECT NUMBER:	44578
DESIGNED BY:	JN
DRAWN BY:	SA
FIELD CHECK:	NA
APPROVED:	FT

SHEET TITLE:

ELECTRICAL THIRD FLOOR POWER PLAN, PART B

BUILDING NUMBER: 102

DRAWING NUMBER: E-103-2B

SHEET

9/22/2015 12:54:51 PM

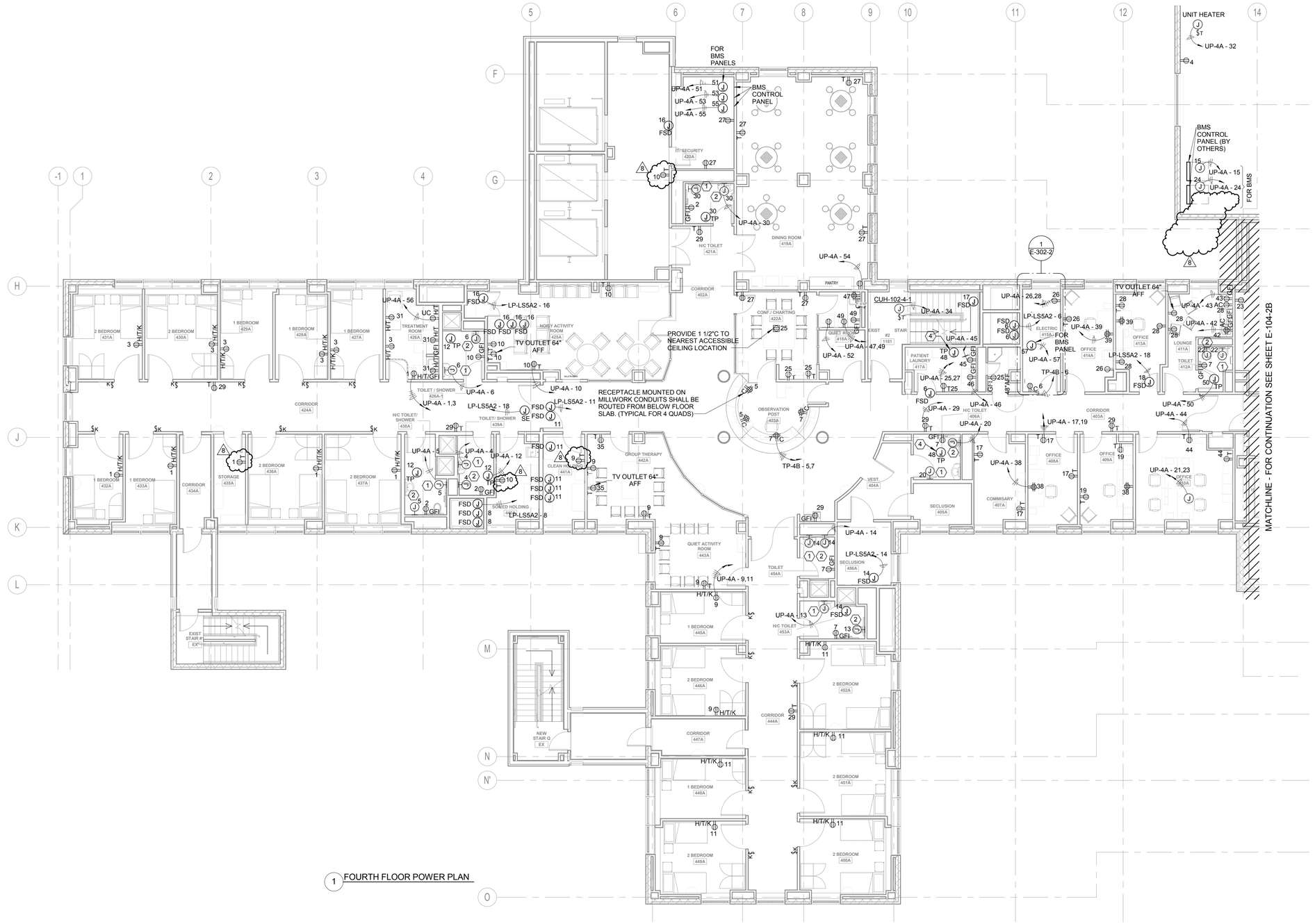

1 FOURTH FLOOR POWER PLAN

NOTES:

1. FOR SYMBOLS AND ABBREVIATIONS, SEE DRAWING E-001.
2. FOR PANEL SCHEDULES, SEE DRAWINGS IN THE E500 SERIES.
3. REFER TO E-300 SERIES DRAWING FOR ELECTRICAL ROOM ENLARGED DRAWING.
4. REFER TO TELECOM DRAWINGS FOR EXACT LOCATION AND QUANTITY OF TELECOM DEVICES.
5. REFER TO FIRE ALARM DRAWINGS FOR EXACT LOCATION AND QUANTITY OF FIRE ALARM DEVICES.
6. REFER TO SECURITY DRAWINGS FOR EXACT LOCATION AND QUANTITY OF SECURITY DEVICES.
7. REFER TO MECHANICAL AND PLUMBING DRAWINGS FOR EXACT EQUIPMENT SIZE AND LOCATION.
8. FOR MECHANICAL AND PLUMBING EQUIPMENT UNDER 1/2 HP, PROVIDE 20A-1P-120V CIRCUIT FROM THE NEAREST UP PANEL.
9. FOR MECHANICAL AND PLUMBING EQUIPMENT 1/2 TO 3 HP, PROVIDE 20A-3P-480V CIRCUIT FROM THE NEAREST DISTRIBUTION PANEL. (13500W MAX LOAD PER CIRCUIT)

KEY NOTES:

1. PROVIDE JUNCTION BOX AND FINAL CONNECTION FOR FAUCET TRANSFORMER. COORDINATE LOCATION WITH PLUMBING DRAWINGS.
2. PROVIDE JUNCTION BOX AND FINAL CONNECTION FOR TOILET TRANSFORMER. COORDINATE LOCATION WITH PLUMBING DRAWINGS.
3. PROVIDE 1-20A DEDICATED CIRCUIT FROM NEAREST CRITICAL PANEL (LP-CR) FOR EACH JUNCTION BOX SERVING PAS TRANSPONDER. ACCESS CONTROL, AND CCTV. SEE SECURITY DRAWINGS FOR EXACT LOCATIONS AND EQUIPMENT INFORMATION.
4. PROVIDE JUNCTION BOX AND FINAL CONNECTION FOR TRAP PRIMER. COORDINATE LOCATION WITH PLUMBING DRAWINGS.
5. NOT USED.

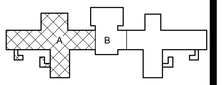

PROJECT NORTH

0 4' 8' 16'
SCALE: 1/8" = 1'-0"

REVISED DRAWING 09/24/2015

NEW YORK STATE OF OPPORTUNITY. Office of General Services

DESIGN & CONSTRUCTION

CONSULTANTS:

RBSD ARCHITECTS P.C. | STV 100 Years

A Joint Venture

225 Park Avenue South
New York, New York 10003

WARNING:
THE ALTERATION OF THIS MATERIAL IN ANY WAY, UNLESS DONE UNDER THE DIRECTION OF A COMPARABLE PROFESSIONAL, I.E. ARCHITECT FOR AN ARCHITECT, ENGINEER FOR AN ENGINEER OR LANDSCAPE ARCHITECT FOR A LANDSCAPE ARCHITECT, IS A VIOLATION OF THE NEW YORK STATE EDUCATION LAW AND/OR REGULATIONS AND IS A CLASS 'A' MISDEMEANOR.

CONTRACT: CONSTRUCTION

TITLE: MAJOR BUILDING RENOVATIONS FOR THE MANHATTAN FORENSIC RELOCATION

LOCATION: MANHATTAN PSYCHIATRIC CENTER, BUILDING No. 102
600 EAST 125TH STREET WARDS ISLAND, NY 10035

CLIENT: NYS OFFICE OF MENTAL HEALTH

MARK	DATE	DESCRIPTION
8	09/24/2015	ADDENDUM 8
6	9-3-2015	ADDENDUM 6
	6-15-2015	BID DOCUMENT

PROJECT NUMBER:	44578
DESIGNED BY:	JN
DRAWN BY:	SA
FIELD CHECK:	NA
APPROVED:	FT

SHEET TITLE: ELECTRICAL FOURTH FLOOR POWER PLAN, PART A

BUILDING NUMBER: 102

DRAWING NUMBER: E-104-2A

SHEET

9/22/2015 12:55:04 PM

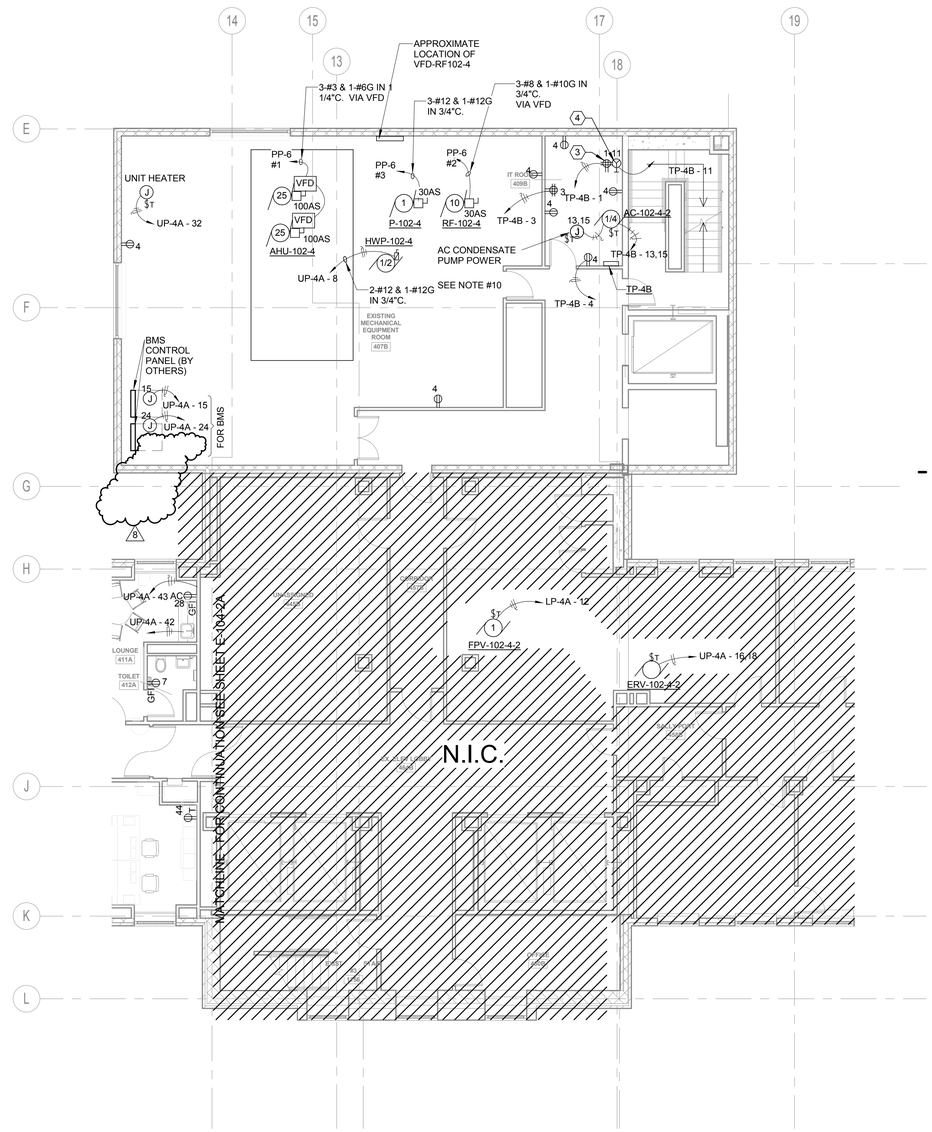

1 FOURTH FLOOR POWER PLAN

NOTES:

1. FOR SYMBOLS AND ABBREVIATIONS, SEE DRAWING E-001.
2. FOR PANEL SCHEDULES, SEE DRAWINGS IN THE E500 SERIES.
3. UON, ALL RECEPTACLES AND JUNCTION BOXES ON THIS PLAN ARE CONNECTED TO THE NEAREST UP PANEL. PROVIDE ONE (1) 120V-20A-1P CIRCUIT PER (8) CONVENIENCE RECEPTACLES (1500W PER CIRCUIT MAX). PROVIDE ONE (1) 120V-20A-1P CIRCUIT PER (8) VAV BOXES (1500W PER CIRCUIT MAX).
4. REFER TO TELECOM DRAWINGS FOR EXACT LOCATION AND QUANTITY OF TELECOM DEVICES.
5. REFER TO FIRE ALARM DRAWINGS FOR EXACT LOCATION AND QUANTITY OF FIRE ALARM DEVICES.
6. REFER TO SECURITY DRAWINGS FOR EXACT LOCATION AND QUANTITY OF SECURITY DEVICES.
7. REFER TO MECHANICAL AND PLUMBING DRAWINGS FOR EXACT EQUIPMENT SIZE AND LOCATION.
8. FOR MECHANICAL AND PLUMBING EQUIPMENT UNDER 1/2 HP, PROVIDE 20A-1P-120V CIRCUIT FROM THE NEAREST UP PANEL.
9. FOR MECHANICAL AND PLUMBING EQUIPMENT 1/2 TO 3 HP, PROVIDE 20A-3P-480V CIRCUIT FROM THE NEAREST DISTRIBUTION PANEL. (13500W MAX LOAD PER CIRCUIT)
10. RETAIN CONDUIT AND CONDUCTORS FROM EXISTING FAN AND PUMP. REUSE CONDUIT AND CONDUCTORS TO FEED NEW EQUIPMENT. RETAIN ONLY CONDUIT FROM EXISTING AHU UNIT. PROVIDE ADDITIONAL WIRING, EXTENSIONS/TERMINATIONS AS REQUIRED.

KEY NOTES:

1. ELECTRICAL CONTRACTOR IS RESPONSIBLE FOR PROVIDING A SINGLE POINT OF CONNECTION TO EQUIPMENT. ALL REMAINING WIRING DOWNSTREAM OF A SINGLE POINT OF CONNECTION SHALL BE FURNISH AND INSTALL BY OTHERS.
2. COORDINATE LOCATION OF DISCONNECT SWITCHES WITH MECH. CONTRACTOR TO KEEP N.E.C. CLEARANCES AS REQUIRED. DISCONNECTS SHALL BE INSTALLED IN AN ACCESSIBLE LOCATION
3. RECEPTACLES SHALL BE MOUNTED ON CABLE TRAY ABAOVE THE DATA RACKS.
4. PROVIDE 30A,1P NEMA L5-30R TWISTLOCK RECEPTACLE WITH 2#10 & 1#10G-3/4"C.

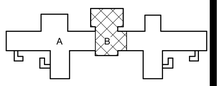

PROJECT NORTH

0 4' 8' 16'
SCALE: 1/8" = 1'-0"

REVISED DRAWING 09/24/2015

NEW YORK STATE OF OPPORTUNITY. Office of General Services

DESIGN & CONSTRUCTION

CONSULTANTS:

RBSD ARCHITECTS P.C. | STV 100 Years

A Joint Venture

225 Park Avenue South
New York, New York 10003

WARNING:
THE ALTERATION OF THIS MATERIAL IN ANY WAY, UNLESS DONE UNDER THE DIRECTION OF A COMPARABLE PROFESSIONAL, I.E. ARCHITECT FOR AN ARCHITECT, ENGINEER FOR AN ENGINEER OR LANDSCAPE ARCHITECT FOR A LANDSCAPE ARCHITECT, IS A VIOLATION OF THE NEW YORK STATE EDUCATION LAW AND/OR REGULATIONS AND IS A CLASS 'A' MISDEMEANOR.

CONTRACT: CONSTRUCTION

TITLE: MAJOR BUILDING RENOVATIONS FOR THE MANHATTAN FORENSIC RELOCATION

LOCATION: MANHATTAN PSYCHIATRIC CENTER, BUILDING No. 102
600 EAST 125TH STREET WARDS ISLAND, NY 10035

CLIENT: NYS OFFICE OF MENTAL HEALTH

MARK	DATE	DESCRIPTION
8	09/24/2015	ADDENDUM 8
	6-15-2015	BID DOCUMENT

PROJECT NUMBER:	44578
DESIGNED BY:	JN
DRAWN BY:	SA
FIELD CHECK:	NA
APPROVED:	FT

SHEET TITLE: ELECTRICAL FOURTH FLOOR POWER PLAN, PART B

BUILDING NUMBER: 102

DRAWING NUMBER: E-104-2B

SHEET

9/22/2015 12:55:12 PM

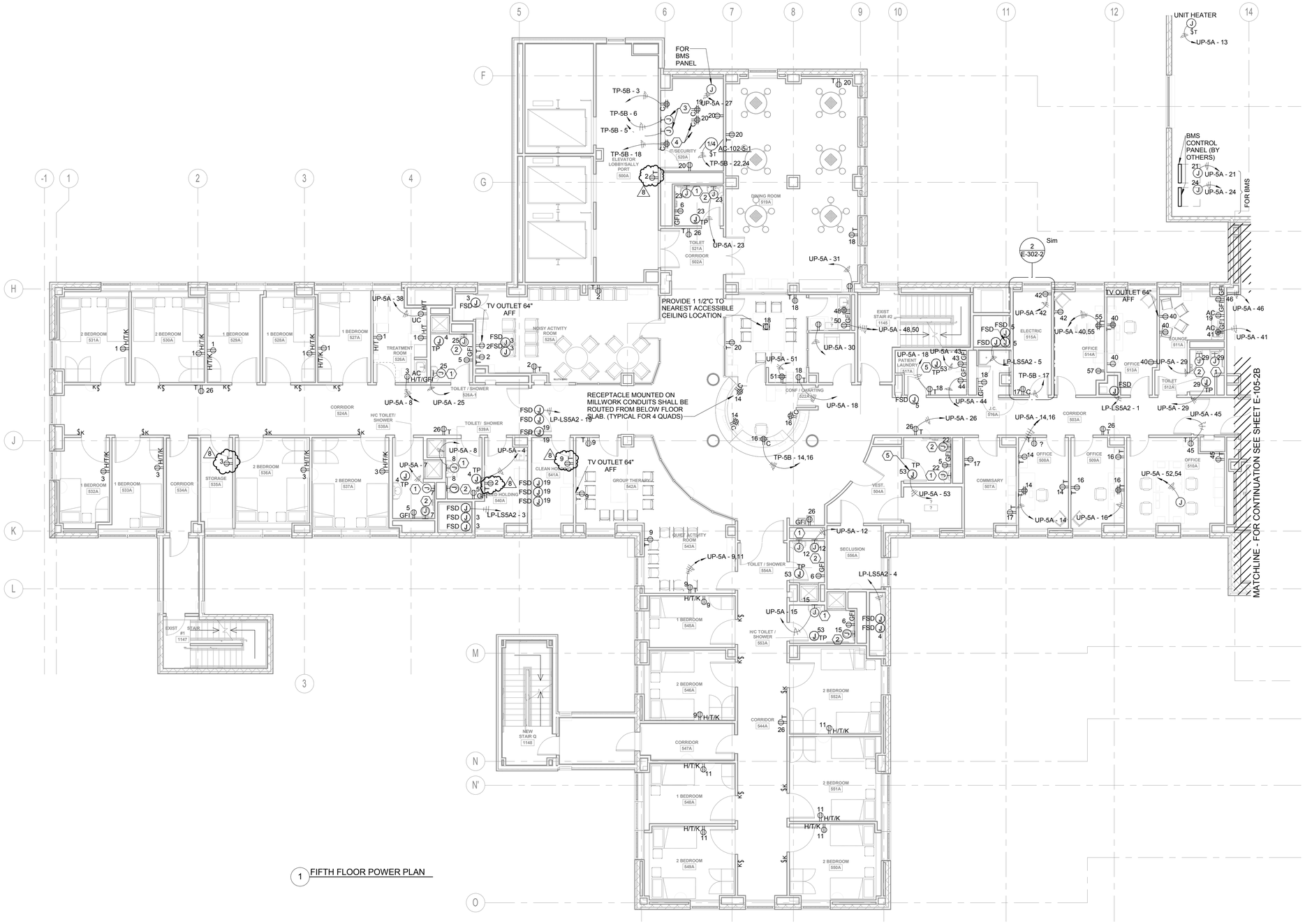

1 FIFTH FLOOR POWER PLAN

NOTES:

1. FOR SYMBOLS AND ABBREVIATIONS, SEE DRAWING E-001.
2. FOR PANEL SCHEDULES, SEE DRAWINGS IN THE E500 SERIES.
3. UON, ALL RECEPTACLES AND JUNCTION BOXES ON THIS PLAN ARE CONNECTED TO THE NEAREST UP PANEL. PROVIDE ONE (1) 120V-20A-1P CIRCUIT PER (8) CONVENIENCE RECEPTACLES (1500W PER CIRCUIT MAX).
4. REFER TO TELECOM DRAWINGS FOR EXACT LOCATION AND QUANTITY OF TELECOM DEVICES.
5. REFER TO FIRE ALARM DRAWINGS FOR EXACT LOCATION AND QUANTITY OF FIRE ALARM DEVICES.
6. REFER TO SECURITY DRAWINGS FOR EXACT LOCATION AND QUANTITY OF SECURITY DEVICES.
7. REFER TO MECHANICAL AND PLUMBING DRAWINGS FOR EXACT EQUIPMENT SIZE AND LOCATION.
8. FOR MECHANICAL AND PLUMBING EQUIPMENT UNDER 1/2 HP, PROVIDE 20A-1P-120V CIRCUIT FROM THE NEAREST UP PANEL.
9. FOR MECHANICAL AND PLUMBING EQUIPMENT 1/2 TO 3 HP, PROVIDE 20A-3P-480V CIRCUIT FROM THE NEAREST DISTRIBUTION PANEL. (13500W MAX LOAD PER CIRCUIT)

KEY NOTES:

1. PROVIDE JUNCTION BOX AND FINAL CONNECTION FOR FAUCET TRANSFORMER. COORDINATE LOCATION WITH PLUMBING DRAWINGS.
2. PROVIDE JUNCTION BOX AND FINAL CONNECTION FOR TOILET TRANSFORMER. COORDINATE LOCATION WITH PLUMBING DRAWINGS.
3. PROVIDE 1-20A DEDICATED CIRCUIT FROM NEAREST CRITICAL PANEL (LP-CR) FOR EACH JUNCTION BOX SERVING PAS TRANSPONDER, ACCESS CONTROL, AND CCTV. SEE SECURITY DRAWINGS FOR EXACT LOCATIONS AND EQUIPMENT INFORMATION.
4. RECEPTACLES SHALL BE MOUNTED ON SECURITY RACK.
5. PROVIDE JUNCTION BOX AND FINAL CONNECTION FOR TRAP PRIMER. COORDINATE LOCATION WITH PLUMBING DRAWINGS.

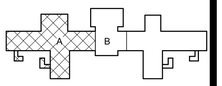

PROJECT NORTH

0 4' 8' 16'
SCALE: 1/8" = 1'-0"

REVISED DRAWING 09/24/2015

NEW YORK STATE OF OPPORTUNITY. Office of General Services

DESIGN & CONSTRUCTION

CONSULTANTS:

RBSD ARCHITECTS P.C. | STV 100 Years

A Joint Venture

225 Park Avenue South
New York, New York 10003

WARNING:
THE ALTERATION OF THIS MATERIAL IN ANY WAY, UNLESS DONE UNDER THE DIRECTION OF A COMPARABLE PROFESSIONAL, I.E. ARCHITECT FOR AN ARCHITECT, ENGINEER FOR AN ENGINEER OR LANDSCAPE ARCHITECT FOR A LANDSCAPE ARCHITECT, IS A VIOLATION OF THE NEW YORK STATE EDUCATION LAW AND/OR REGULATIONS AND IS A CLASS 'A' MISDEMEANOR.

CONTRACT:
CONSTRUCTION

TITLE:
MAJOR BUILDING RENOVATIONS FOR THE MANHATTAN FORENSIC RELOCATION

LOCATION: MANHATTAN PSYCHIATRIC CENTER, BUILDING No. 102
600 EAST 125TH STREET WARDS ISLAND, NY 10035

CLIENT:
NYS OFFICE OF MENTAL HEALTH

MARK	DATE	DESCRIPTION
8	09/24/2015	ADDENDUM 8
6	9-3-2015	ADDENDUM 6
	6-15-2015	BID DOCUMENT

PROJECT NUMBER:	44578
DESIGNED BY:	JN
DRAWN BY:	SA
FIELD CHECK:	NA
APPROVED:	FT

SHEET TITLE:
ELECTRICAL FIFTH FLOOR POWER PLAN, PART A

BUILDING NUMBER: 102

DRAWING NUMBER: E-105-2A

SHEET

9/22/2015 12:55:25 PM

NOTES:

1. FOR SYMBOLS AND ABBREVIATIONS, SEE DRAWING E-001.
2. FOR PANEL SCHEDULES, SEE DRAWINGS IN THE E500 SERIES.
3. UON, ALL RECEPTACLES AND JUNCTION BOXES ON THIS PLAN ARE CONNECTED TO THE NEAREST UP PANEL. PROVIDE ONE (1) 120V-20A-1P CIRCUIT PER (8) CONVENIENCE RECEPTACLES (1500W PER CIRCUIT MAX).
4. REFER TO TELECOM DRAWINGS FOR EXACT LOCATION AND QUANTITY OF TELECOM DEVICES.
5. REFER TO FIRE ALARM DRAWINGS FOR EXACT LOCATION AND QUANTITY OF FIRE ALARM DEVICES.
6. REFER TO SECURITY DRAWINGS FOR EXACT LOCATION AND QUANTITY OF SECURITY DEVICES.
7. REFER TO MECHANICAL AND PLUMBING DRAWINGS FOR EXACT EQUIPMENT SIZE AND LOCATION.
8. FOR MECHANICAL AND PLUMBING EQUIPMENT UNDER 1/2 HP, PROVIDE 20A-1P-120V CIRCUIT FROM THE NEAREST UP PANEL.
9. FOR MECHANICAL AND PLUMBING EQUIPMENT 1/2 TO 3 HP, PROVIDE 20A-3P-480V CIRCUIT FROM THE NEAREST DISTRIBUTION PANEL. (13500W MAX LOAD PER CIRCUIT)

KEY NOTES:

1. PROVIDE JUNCTION BOX AND FINAL CONNECTION FOR FAUCET TRANSFORMER. COORDINATE LOCATION WITH PLUMBING DRAWINGS.
2. PROVIDE JUNCTION BOX AND FINAL CONNECTION FOR TOILET TRANSFORMER. COORDINATE LOCATION WITH PLUMBING DRAWINGS.
3. PROVIDE 1-20A DEDICATED CIRCUIT FROM NEAREST CRITICAL PANEL (LP-CR) FOR EACH JUNCTION BOX SERVING PAS TRANSPONDER, ACCESS CONTROL, AND CCTV. SEE SECURITY DRAWINGS FOR EXACT LOCATIONS AND EQUIPMENT INFORMATION.
4. PROVIDE JUNCTION BOX AND FINAL CONNECTION FOR TRAP PRIMER. COORDINATE LOCATION WITH PLUMBING DRAWINGS.
5. PROVIDE 1-20A DEDICATED CIRCUIT FROM NEAREST LIFE SAFETY PANEL (LP-LS) FOR FIRE ALARM CONTROL PANEL. SEE FIRE ALARM DRAWINGS FOR EXACT LOCATIONS.

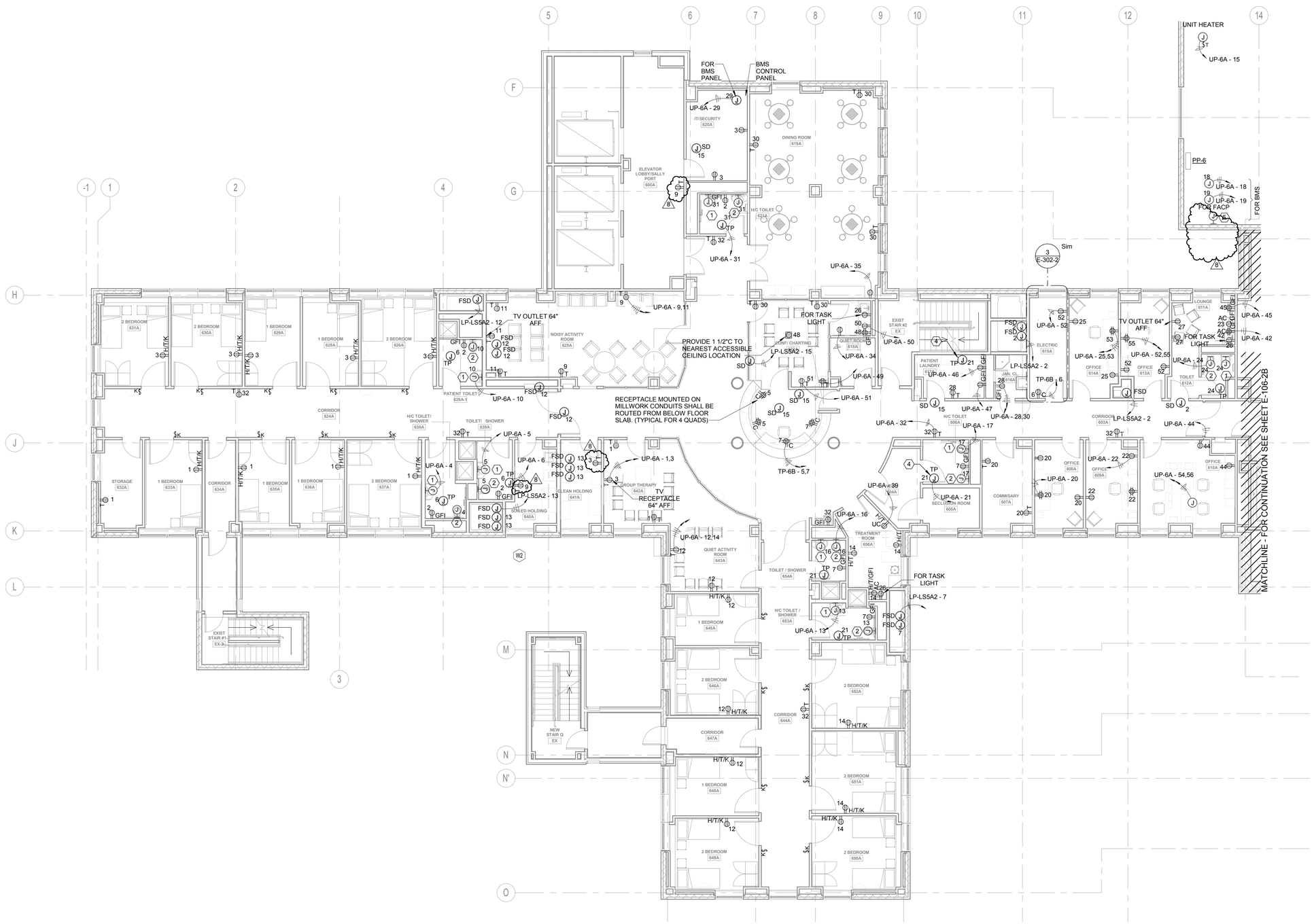

1 SIXTH FLOOR POWER PLAN

REVISED DRAWING 09/24/2015

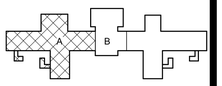

PROJECT NORTH

0 4' 8' 16'
SCALE: 1/8" = 1'-0"

NEW YORK STATE OF OPPORTUNITY. Office of General Services

DESIGN & CONSTRUCTION

CONSULTANTS:

RBSD ARCHITECTS P.C. | STV 100 Years

A Joint Venture

225 Park Avenue South
New York, New York 10003

WARNING:
THE ALTERATION OF THIS MATERIAL IN ANY WAY, UNLESS DONE UNDER THE DIRECTION OF A COMPARABLE PROFESSIONAL, I.E. ARCHITECT FOR AN ARCHITECT, ENGINEER FOR AN ENGINEER OR LANDSCAPE ARCHITECT FOR A LANDSCAPE ARCHITECT, IS A VIOLATION OF THE NEW YORK STATE EDUCATION LAW AND/OR REGULATIONS AND IS A CLASS 'A' MISDEMEANOR.

CONTRACT:
CONSTRUCTION

TITLE:
MAJOR BUILDING RENOVATIONS FOR THE MANHATTAN FORENSIC RELOCATION

LOCATION: MANHATTAN PSYCHIATRIC CENTER, BUILDING No. 102
600 EAST 125TH STREET WARDS ISLAND, NY 10035

CLIENT:
NYS OFFICE OF MENTAL HEALTH

MARK	DATE	DESCRIPTION
8	09/24/2015	ADDENDUM 8
6	9-3-2015	ADDENDUM 6
	6-15-2015	BID DOCUMENT

PROJECT NUMBER:	44578
DESIGNED BY:	JN
DRAWN BY:	SA
FIELD CHECK:	NA
APPROVED:	FT

SHEET TITLE:
ELECTRICAL SIXTH FLOOR POWER PLAN, PART A

BUILDING NUMBER: 102

DRAWING NUMBER: E-106-2A

SHEET

9/22/2015 12:55:38 PM

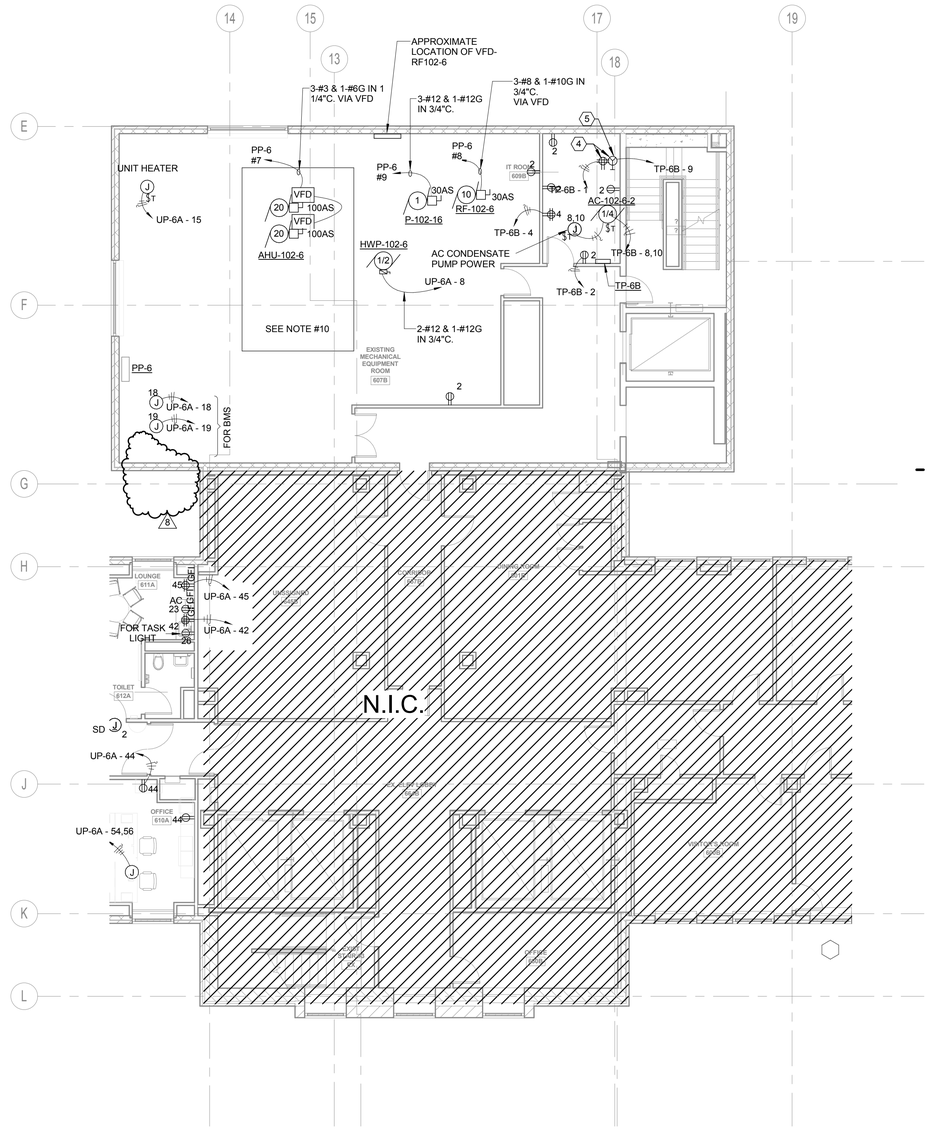

1 SIXTH FLOOR POWER PLAN

REVISED DRAWING 09/24/2015

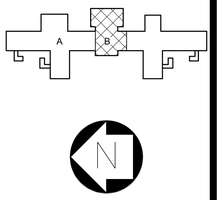

0 4' 8' 16'
SCALE: 1/8" = 1'-0"

NOTES:

1. FOR SYMBOLS AND ABBREVIATIONS, SEE DRAWING E-001.
2. FOR PANEL SCHEDULES, SEE DRAWINGS IN THE E500 SERIES.
3. UON, ALL RECEPTACLES AND JUNCTION BOXES ON THIS PLAN ARE CONNECTED TO THE NEAREST UP PANEL. PROVIDE ONE (1) 120V-20A-1P CIRCUIT PER (8) CONVENIENCE RECEPTACLES (1500W PER CIRCUIT MAX). PROVIDE ONE (1) 120V-20A-1P CIRCUIT PER (8) VAV BOXES (1500W PER CIRCUIT MAX).
4. REFER TO TELECOM DRAWINGS FOR EXACT LOCATION AND QUANTITY OF TELECOM DEVICES.
5. REFER TO FIRE ALARM DRAWINGS FOR EXACT LOCATION AND QUANTITY OF FIRE ALARM DEVICES.
6. REFER TO SECURITY DRAWINGS FOR EXACT LOCATION AND QUANTITY OF SECURITY DEVICES.
7. REFER TO MECHANICAL AND PLUMBING DRAWINGS FOR EXACT EQUIPMENT SIZE AND LOCATION.
8. FOR MECHANICAL AND PLUMBING EQUIPMENT UNDER 1/2 HP, PROVIDE 20A-1P-120V CIRCUIT FROM THE NEAREST UP PANEL.
9. FOR MECHANICAL AND PLUMBING EQUIPMENT 1/2 TO 3 HP, PROVIDE 20A-3P-480V CIRCUIT FROM THE NEAREST DISTRIBUTION PANEL. (13500W MAX LOAD PER CIRCUIT)
10. RETAIN CONDUIT AND CONDUCTORS FROM EXISTING FAN AND PUMP. REUSE CONDUIT AND CONDUCTORS TO FEED NEW EQUIPMENT. RETAIN ONLY CONDUIT FROM EXISTING AHU UNIT. PROVIDE ADDITIONAL WIRING, EXTENSIONS/TERMINATIONS AS REQUIRED.

KEY NOTES:

1. ELECTRICAL CONTRACTOR IS RESPONSIBLE FOR PROVIDING A SINGLE POINT OF CONNECTION TO EQUIPMENT. ALL REMAINING WIRING DOWNSTREAM OF A SINGLE POINT OF CONNECTION SHALL BE FURNISH AND INSTALL BY OTHERS.
2. ALL ELECTRICAL PANELS LOCATED WITHIN THE MECHANICAL ROOMS SHALL BE PROVIDED WITH THE CODE REQUIRED CLEARANCES. ELECTRICAL CONTRACTOR SHALL COORDINATE FINAL LAYOUTS WITH MECHANICAL AND PLUMBING CONTRACTORS PRIOR TO ROUGH IN. ABSOLUTELY NO PIPING, DUCT OR OTHER SYSTEMS FOREIGN TO ELECTRICAL INSTALLATION ARE ALLOW ABOVE PANELS.
3. COORDINATE LOCATION OF DISCONNECT SWITCHES WITH MECH. CONTRACTOR TO KEEP N.E.C. CLEARANCES AS REQUIRED. DISCONNECTS SHALL BE INSTALLED IN AN ACCESSIBLE LOCATION
4. RECEPTACLES SHALL BE MOUNTED ON CABLE TRAY ABOVE THE DATA RACKS.
5. PROVIDE 30A,1P NEMA L5-30R TWISTLOCK RECEPTACLE WITH 2#10 & 1#10G-3/4"C.

NEW YORK STATE OF OPPORTUNITY. Office of General Services

DESIGN & CONSTRUCTION

CONSULTANTS:

RBSD ARCHITECTS P.C. | STV 100 Years

A Joint Venture
225 Park Avenue South
New York, New York 10003

WARNING:
THE ALTERATION OF THIS MATERIAL IN ANY WAY, UNLESS DONE UNDER THE DIRECTION OF A COMPARABLE PROFESSIONAL, I.E. ARCHITECT FOR AN ARCHITECT, ENGINEER FOR AN ENGINEER OR LANDSCAPE ARCHITECT FOR A LANDSCAPE ARCHITECT, IS A VIOLATION OF THE NEW YORK STATE EDUCATION LAW AND/OR REGULATIONS AND IS A CLASS 'A' MISDEMEANOR.

CONTRACT: CONSTRUCTION

TITLE: MAJOR BUILDING RENOVATIONS FOR THE MANHATTAN FORENSIC RELOCATION

LOCATION: MANHATTAN PSYCHIATRIC CENTER, BUILDING No. 102
600 EAST 125TH STREET WARDS ISLAND, NY 10035

CLIENT: NYS OFFICE OF MENTAL HEALTH

MARK	DATE	DESCRIPTION
8	09/24/2015	ADDENDUM 8
	6-15-2015	BID DOCUMENT

PROJECT NUMBER:	44578
DESIGNED BY:	JN
DRAWN BY:	SA
FIELD CHECK:	NA
APPROVED:	FT

SHEET TITLE:
ELECTRICAL SIXTH FLOOR POWER PLAN, PART B

BUILDING NUMBER: 102

DRAWING NUMBER: E-106-2B

SHEET

9/22/2015 12:55:46 PM

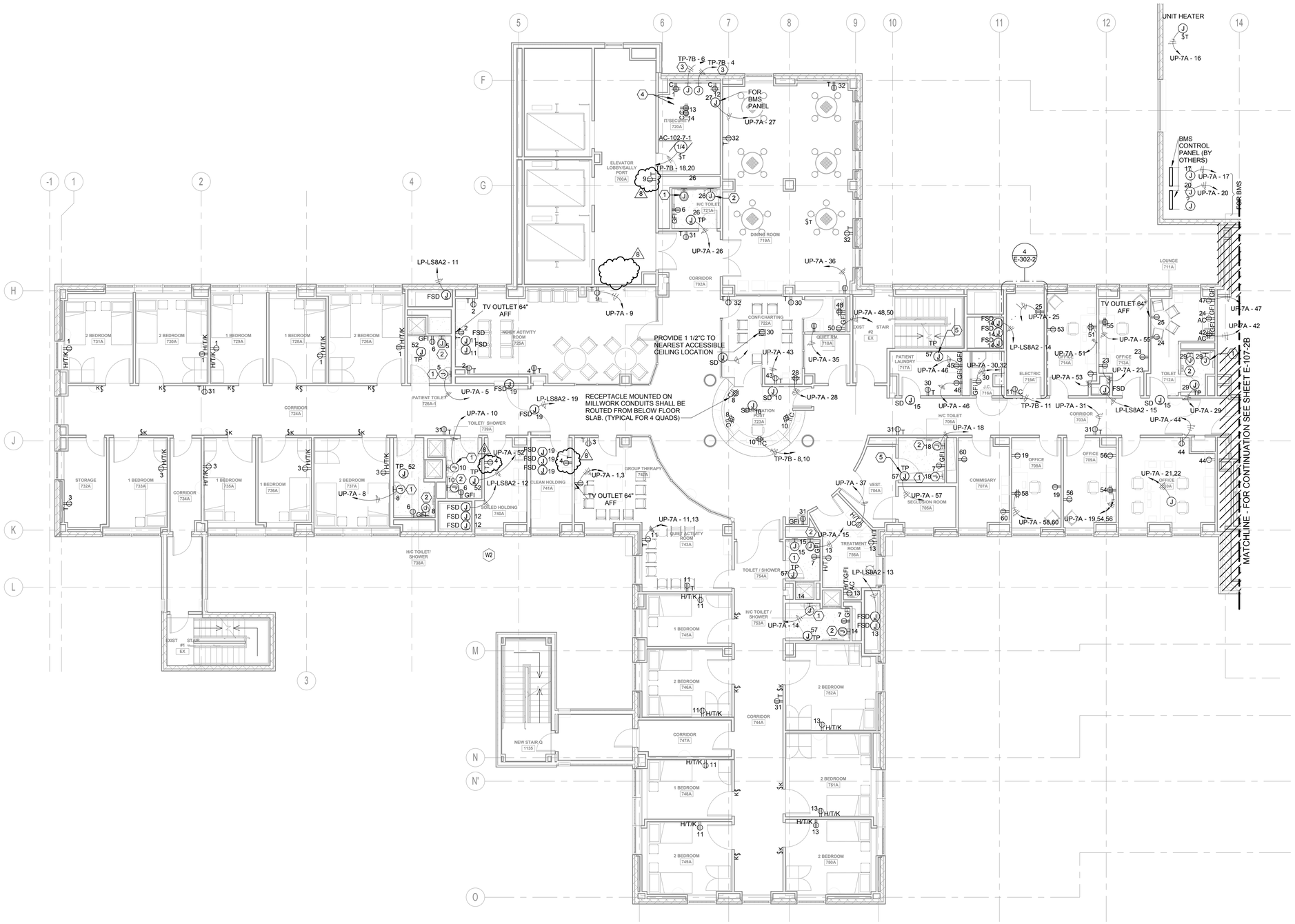

1 SEVENTH FLOOR POWER PLAN

REVISED DRAWING 09/24/2015

NOTES:

1. FOR SYMBOLS AND ABBREVIATIONS, SEE DRAWING E-001.
2. FOR PANEL SCHEDULES, SEE DRAWINGS IN THE E500 SERIES.
3. UON, ALL RECEPTACLES AND JUNCTION BOXES ON THIS PLAN ARE CONNECTED TO THE NEAREST UP PANEL. PROVIDE ONE (1) 120V-20A-1P CIRCUIT PER (8) CONVENIENCE RECEPTACLES (1500W PER CIRCUIT MAX).
4. REFER TO TELECOM DRAWINGS FOR EXACT LOCATION AND QUANTITY OF TELECOM DEVICES.
5. REFER TO FIRE ALARM DRAWINGS FOR EXACT LOCATION AND QUANTITY OF FIRE ALARM DEVICES.
6. REFER TO SECURITY DRAWINGS FOR EXACT LOCATION AND QUANTITY OF SECURITY DEVICES.
7. REFER TO MECHANICAL AND PLUMBING DRAWINGS FOR EXACT EQUIPMENT SIZE AND LOCATION.
8. FOR MECHANICAL AND PLUMBING EQUIPMENT UNDER 1/2 HP, PROVIDE 20A-1P-120V CIRCUIT FROM THE NEAREST UP PANEL.
9. FOR MECHANICAL AND PLUMBING EQUIPMENT 1/2 TO 3 HP, PROVIDE 20A-3P-480V CIRCUIT FROM THE NEAREST DISTRIBUTION PANEL. (13500W MAX LOAD PER CIRCUIT)

KEY NOTES:

1. PROVIDE JUNCTION BOX AND FINAL CONNECTION FOR FAUCET TRANSFORMER. COORDINATE LOCATION WITH PLUMBING DRAWINGS.
2. PROVIDE JUNCTION BOX AND FINAL CONNECTION FOR TOILET TRANSFORMER. COORDINATE LOCATION WITH PLUMBING DRAWINGS.
3. PROVIDE 1-20A DEDICATED CIRCUIT FROM NEAREST CRITICAL PANEL (LP-CR) FOR EACH JUNCTION BOX SERVING PAS TRANSPONDER, ACCESS CONTROL, AND CCTV. SEE SECURITY DRAWINGS FOR EXACT LOCATIONS AND EQUIPMENT INFORMATION.
4. RECEPTACLES SHALL MOUNTED ON SECURITY RACK.
5. PROVIDE JUNCTION BOX AND FINAL CONNECTION FOR TRAP PRIMER. COORDINATE LOCATION WITH PLUMBING DRAWINGS.

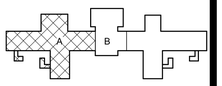

PROJECT NORTH

0 4' 8' 16'
SCALE: 1/8" = 1'-0"

NEW YORK STATE OF OPPORTUNITY. Office of General Services

DESIGN & CONSTRUCTION

CONSULTANTS:

RBSD ARCHITECTS P.C. | STV 100 Years

A Joint Venture

225 Park Avenue South
New York, New York 10003

WARNING:
THE ALTERATION OF THIS MATERIAL IN ANY WAY, UNLESS DONE UNDER THE DIRECTION OF A COMPARABLE PROFESSIONAL, I.E. ARCHITECT FOR AN ARCHITECT, ENGINEER FOR AN ENGINEER OR LANDSCAPE ARCHITECT FOR A LANDSCAPE ARCHITECT, IS A VIOLATION OF THE NEW YORK STATE EDUCATION LAW AND/OR REGULATIONS AND IS A CLASS 'A' MISDEMEANOR.

CONTRACT: CONSTRUCTION

TITLE: MAJOR BUILDING RENOVATIONS FOR THE MANHATTAN FORENSIC RELOCATION

LOCATION: MANHATTAN PSYCHIATRIC CENTER, BUILDING No. 102
600 EAST 125TH STREET WARDS ISLAND, NY 10035

CLIENT: NYS OFFICE OF MENTAL HEALTH

MARK	DATE	DESCRIPTION
8	09/24/2015	ADDENDUM 8
	6-15-2015	BID DOCUMENT

PROJECT NUMBER:	44578
DESIGNED BY:	JN
DRAWN BY:	SA
FIELD CHECK:	NA
APPROVED:	FT

SHEET TITLE:
ELECTRICAL SEVENTH FLOOR POWER PLAN, PART A

BUILDING NUMBER: 102

DRAWING NUMBER: E-107-2A

SHEET

9/22/2015 12:56:00 PM

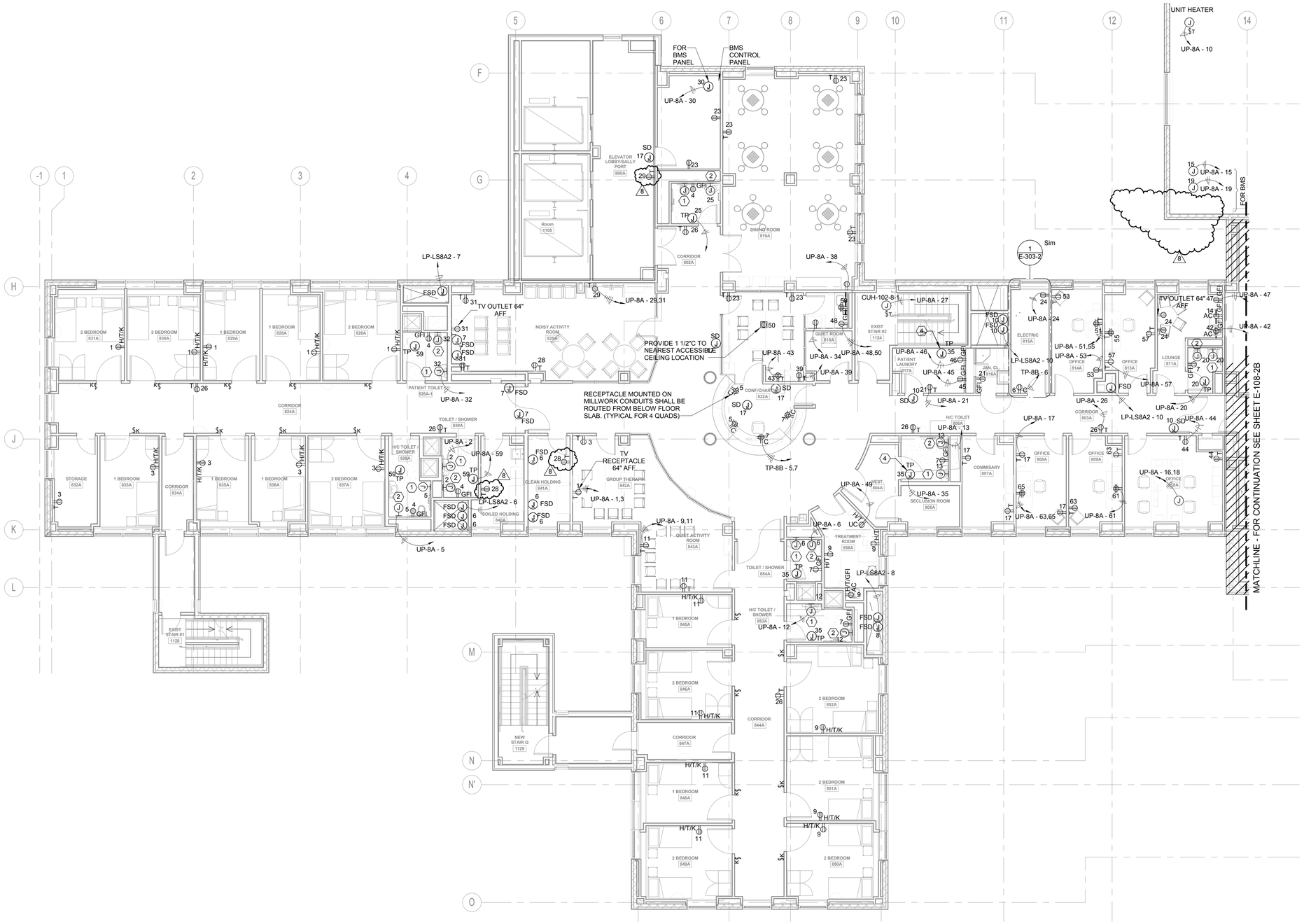

1 EIGHTH FLOOR POWER PLAN

REVISED DRAWING 09/24/2015

NOTES:

1. FOR SYMBOLS AND ABBREVIATIONS, SEE DRAWING E-001.
2. FOR PANEL SCHEDULES, SEE DRAWINGS IN THE E500 SERIES.
3. UON, ALL RECEPTACLES AND JUNCTION BOXES ON THIS PLAN ARE CONNECTED TO THE NEAREST UP PANEL. PROVIDE ONE (1) 120V-20A-1P CIRCUIT PER (8) CONVENIENCE RECEPTACLES (1500W PER CIRCUIT MAX).
4. REFER TO TELECOM DRAWINGS FOR EXACT LOCATION AND QUANTITY OF TELECOM DEVICES.
5. REFER TO FIRE ALARM DRAWINGS FOR EXACT LOCATION AND QUANTITY OF FIRE ALARM DEVICES.
6. REFER TO SECURITY DRAWINGS FOR EXACT LOCATION AND QUANTITY OF SECURITY DEVICES.
7. REFER TO MECHANICAL AND PLUMBING DRAWINGS FOR EXACT EQUIPMENT SIZE AND LOCATION.
8. FOR MECHANICAL AND PLUMBING EQUIPMENT UNDER 1/2 HP, PROVIDE 20A-1P-120V CIRCUIT FROM THE NEAREST UP PANEL.
9. FOR MECHANICAL AND PLUMBING EQUIPMENT 1/2 TO 3 HP, PROVIDE 20A-3P-480V CIRCUIT FROM THE NEAREST DISTRIBUTION PANEL. (13500W MAX LOAD PER CIRCUIT)

KEY NOTES:

1. PROVIDE JUNCTION BOX AND FINAL CONNECTION FOR FAUCET TRANSFORMER. COORDINATE LOCATION WITH PLUMBING DRAWINGS.
2. PROVIDE JUNCTION BOX AND FINAL CONNECTION FOR TOILET TRANSFORMER. COORDINATE LOCATION WITH PLUMBING DRAWINGS.
3. PROVIDE 1-20A DEDICATED CIRCUIT FROM NEAREST CRITICAL PANEL (LP-CR) FOR EACH JUNCTION BOX SERVING PAS TRANSPONDER, ACCESS CONTROL, AND CCTV. SEE SECURITY DRAWINGS FOR EXACT LOCATIONS AND EQUIPMENT INFORMATION.
4. PROVIDE JUNCTION BOX AND FINAL CONNECTION FOR TRAP PRIMER. COORDINATE LOCATION WITH PLUMBING DRAWINGS.

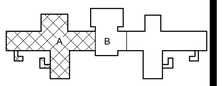

PROJECT NORTH

0 4' 8' 16'
SCALE: 1/8" = 1'-0"

NEW YORK STATE OF OPPORTUNITY. Office of General Services

DESIGN & CONSTRUCTION

CONSULTANTS:

RBSD ARCHITECTS P.C. | STV 100 Years

A Joint Venture
225 Park Avenue South
New York, New York 10003

WARNING:
THE ALTERATION OF THIS MATERIAL IN ANY WAY, UNLESS DONE UNDER THE DIRECTION OF A COMPARABLE PROFESSIONAL, I.E. ARCHITECT FOR AN ARCHITECT, ENGINEER FOR AN ENGINEER OR LANDSCAPE ARCHITECT FOR A LANDSCAPE ARCHITECT, IS A VIOLATION OF THE NEW YORK STATE EDUCATION LAW AND/OR REGULATIONS AND IS A CLASS 'A' MISDEMEANOR.

CONTRACT: CONSTRUCTION

TITLE: MAJOR BUILDING RENOVATIONS FOR THE MANHATTAN FORENSIC RELOCATION

LOCATION: MANHATTAN PSYCHIATRIC CENTER, BUILDING No. 102
600 EAST 125TH STREET WARDS ISLAND, NY 10035

CLIENT: NYS OFFICE OF MENTAL HEALTH

MARK	DATE	DESCRIPTION
8	09/24/2015	ADDENDUM 8
6	9-3-2015	ADDENDUM 6
	6-15-2015	BID DOCUMENT

PROJECT NUMBER:	44578
DESIGNED BY:	JN
DRAWN BY:	SA
FIELD CHECK:	NA
APPROVED:	FT

SHEET TITLE:

ELECTRICAL EIGHTH FLOOR POWER PLAN, PART A

BUILDING NUMBER: 102

DRAWING NUMBER: E-108-2A

SHEET

9/22/2015 12:56:14 PM

NOTES:

1. FOR SYMBOLS AND ABBREVIATIONS, SEE DRAWING E-001.
2. FOR PANEL SCHEDULES, SEE DRAWINGS IN THE E500 SERIES.
3. UON, ALL RECEPTACLES AND JUNCTION BOXES ON THIS PLAN ARE CONNECTED TO THE NEAREST UP PANEL. PROVIDE ONE (1) 120V-20A-1P CIRCUIT PER (8) CONVENIENCE RECEPTACLES (1500W PER CIRCUIT MAX).
4. REFER TO TELECOM DRAWINGS FOR EXACT LOCATION AND QUANTITY OF TELECOM DEVICES.
5. REFER TO FIRE ALARM DRAWINGS FOR EXACT LOCATION AND QUANTITY OF FIRE ALARM DEVICES.
6. REFER TO SECURITY DRAWINGS FOR EXACT LOCATION AND QUANTITY OF SECURITY DEVICES.
7. REFER TO MECHANICAL AND PLUMBING DRAWINGS FOR EXACT EQUIPMENT SIZE AND LOCATION.
8. FOR MECHANICAL AND PLUMBING EQUIPMENT UNDER 1/2 HP, PROVIDE 20A-1P-120V CIRCUIT FROM THE NEAREST UP PANEL.
9. FOR MECHANICAL AND PLUMBING EQUIPMENT 1/2 TO 3 HP, PROVIDE 20A-3P-480V CIRCUIT FROM THE NEAREST DISTRIBUTION PANEL. (13500W MAX LOAD PER CIRCUIT)

KEY NOTES:

1. PROVIDE JUNCTION BOX AND FINAL CONNECTION FOR FAUCET TRANSFORMER. COORDINATE LOCATION WITH PLUMBING DRAWINGS.
2. PROVIDE JUNCTION BOX AND FINAL CONNECTION FOR TOILET TRANSFORMER. COORDINATE LOCATION WITH PLUMBING DRAWINGS.
3. PROVIDE 1-20A DEDICATED CIRCUIT FROM NEAREST CRITICAL PANEL (LP-CR) FOR EACH JUNCTION BOX SERVING PAS TRANSPONDER, ACCESS CONTROL, AND CCTV. SEE SECURITY DRAWINGS FOR EXACT LOCATIONS AND EQUIPMENT INFORMATION.
4. RECEPTACLES SHALL BE MOUNTED ON SECURITY RACK.
5. PROVIDE JUNCTION BOX AND FINAL CONNECTION FOR TRAP PRIMER. COORDINATE LOCATION WITH PLUMBING DRAWINGS.

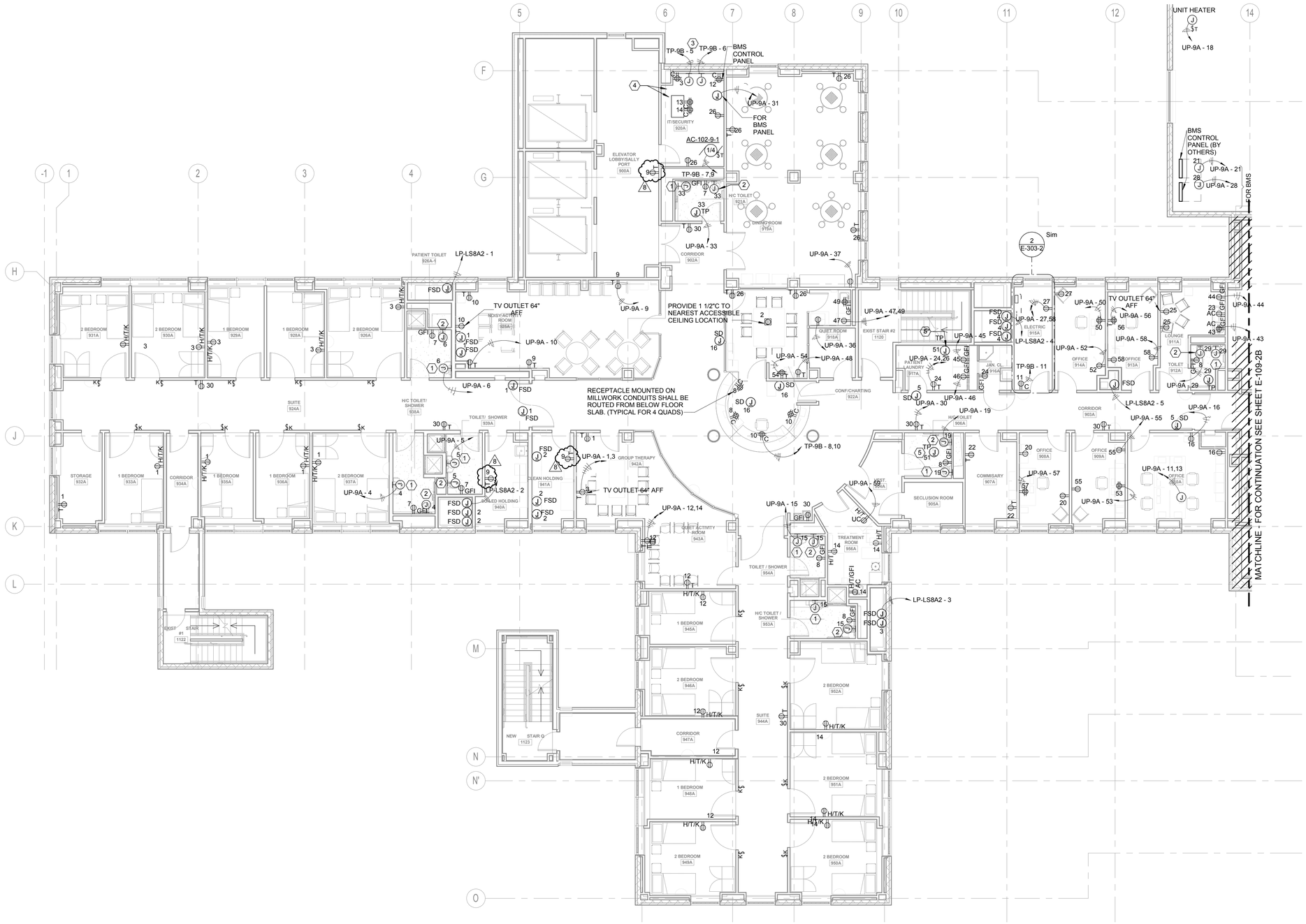

1 NINTH FLOOR POWER PLAN

REVISED DRAWING 09/24/2015

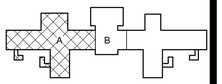

PROJECT NORTH

0 4' 8' 16'
SCALE: 1/8" = 1'-0"

NEW YORK STATE OF OPPORTUNITY. | Office of General Services

DESIGN & CONSTRUCTION

CONSULTANTS:

RBSD ARCHITECTS P.C. | STV 100 Years

A Joint Venture

225 Park Avenue South
New York, New York 10003

WARNING:
THE ALTERATION OF THIS MATERIAL IN ANY WAY, UNLESS DONE UNDER THE DIRECTION OF A COMPARABLE PROFESSIONAL, I.E. ARCHITECT FOR AN ARCHITECT, ENGINEER FOR AN ENGINEER OR LANDSCAPE ARCHITECT FOR A LANDSCAPE ARCHITECT, IS A VIOLATION OF THE NEW YORK STATE EDUCATION LAW AND/OR REGULATIONS AND IS A CLASS 'A' MISDEMEANOR.

CONTRACT:
CONSTRUCTION

TITLE:
MAJOR BUILDING RENOVATIONS FOR THE MANHATTAN FORENSIC RELOCATION

LOCATION: MANHATTAN PSYCHIATRIC CENTER, BUILDING No. 102
600 EAST 125TH STREET WARDS ISLAND, NY 10035

CLIENT:
NYS OFFICE OF MENTAL HEALTH

MARK	DATE	DESCRIPTION
8	09/24/2015	ADDENDUM 8
6	9-3-2015	ADDENDUM 6
	6-15-2015	BID DOCUMENT

PROJECT NUMBER:	44578
DESIGNED BY:	JN
DRAWN BY:	SA
FIELD CHECK:	NA
APPROVED:	FT

SHEET TITLE:
ELECTRICAL NINTH FLOOR POWER PLAN, PART A

BUILDING NUMBER: 102

DRAWING NUMBER: E-109-2A

SHEET

9/22/2015 12:56:27 PM

NOTES:

1. FOR SYMBOLS AND ABBREVIATIONS, SEE DRAWING E-001.
2. FOR PANEL SCHEDULES, SEE DRAWINGS IN THE E500 SERIES.
3. UON, ALL RECEPTACLES AND JUNCTION BOXES ON THIS PLAN ARE CONNECTED TO THE NEAREST UP PANEL. PROVIDE ONE (1) 120V-20A-1P CIRCUIT PER (8) CONVENIENCE RECEPTACLES (1500W PER CIRCUIT MAX).
4. REFER TO TELECOM DRAWINGS FOR EXACT LOCATION AND QUANTITY OF TELECOM DEVICES.
5. REFER TO FIRE ALARM DRAWINGS FOR EXACT LOCATION AND QUANTITY OF FIRE ALARM DEVICES.
6. REFER TO SECURITY DRAWINGS FOR EXACT LOCATION AND QUANTITY OF SECURITY DEVICES.
7. REFER TO MECHANICAL AND PLUMBING DRAWINGS FOR EXACT EQUIPMENT SIZE AND LOCATION.
8. FOR MECHANICAL AND PLUMBING EQUIPMENT UNDER 1/2 HP, PROVIDE 20A-1P-120V CIRCUIT FROM THE NEAREST UP PANEL.
9. FOR MECHANICAL AND PLUMBING EQUIPMENT 1/2 TO 3 HP, PROVIDE 20A-3P-480V CIRCUIT FROM THE NEAREST DISTRIBUTION PANEL. (13500W MAX LOAD PER CIRCUIT)

KEY NOTES:

1. PROVIDE JUNCTION BOX AND FINAL CONNECTION FOR FAUCET TRANSFORMER. COORDINATE LOCATION WITH PLUMBING DRAWINGS.
2. PROVIDE JUNCTION BOX AND FINAL CONNECTION FOR TOILET TRANSFORMER. COORDINATE LOCATION WITH PLUMBING DRAWINGS.
3. PROVIDE 1-20A DEDICATED CIRCUIT FROM NEAREST CRITICAL PANEL (LP-CR) FOR EACH JUNCTION BOX SERVING PAS TRANSPONDER, ACCESS CONTROL, AND CCTV. SEE SECURITY DRAWINGS FOR EXACT LOCATIONS AND EQUIPMENT INFORMATION.
4. PROVIDE JUNCTION BOX AND FINAL CONNECTION FOR TRAP PRIMER. COORDINATE LOCATION WITH PLUMBING DRAWINGS.

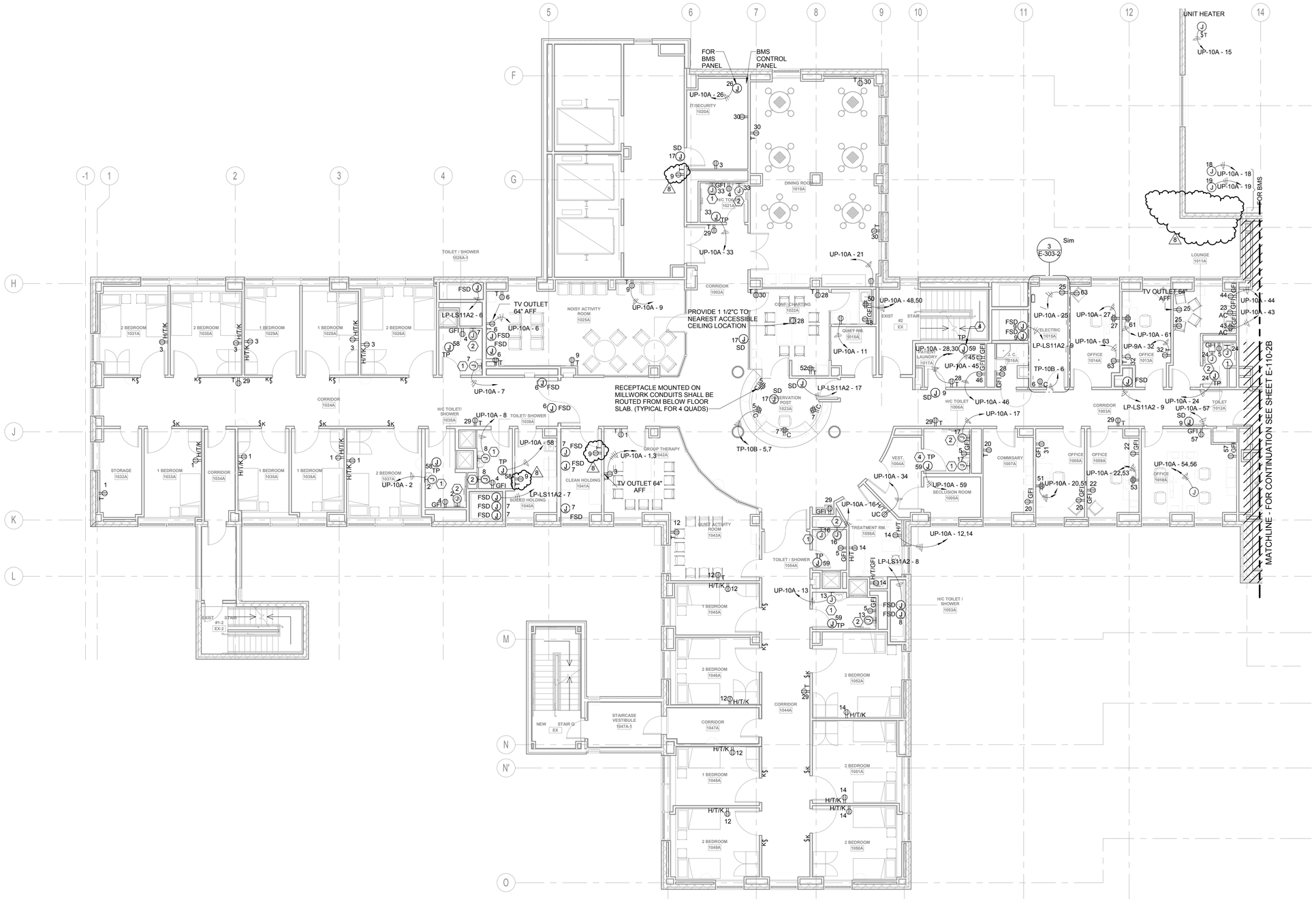

1 TENTH FLOOR POWER PLAN

REVISED DRAWING 09/24/2015

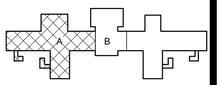

PROJECT NORTH

0 4' 8' 16'

SCALE: 1/8" = 1'-0"

NEW YORK STATE OF OPPORTUNITY. Office of General Services

DESIGN & CONSTRUCTION

CONSULTANTS:

RBSD ARCHITECTS P.C. | STV 100 Years

A Joint Venture

225 Park Avenue South
New York, New York 10003

WARNING:
THE ALTERATION OF THIS MATERIAL IN ANY WAY, UNLESS DONE UNDER THE DIRECTION OF A COMPARABLE PROFESSIONAL, I.E. ARCHITECT FOR AN ARCHITECT, ENGINEER FOR AN ENGINEER OR LANDSCAPE ARCHITECT FOR A LANDSCAPE ARCHITECT, IS A VIOLATION OF THE NEW YORK STATE EDUCATION LAW AND/OR REGULATIONS AND IS A CLASS 'A' MISDEMEANOR.

CONTRACT:
CONSTRUCTION

TITLE:
MAJOR BUILDING RENOVATIONS FOR THE MANHATTAN FORENSIC RELOCATION

LOCATION: MANHATTAN PSYCHIATRIC CENTER, BUILDING No. 102
600 EAST 125TH STREET WARDS ISLAND, NY 10035

CLIENT:
NYS OFFICE OF MENTAL HEALTH

MARK	DATE	DESCRIPTION
8	09/24/2015	ADDENDUM 8
6	9-3-2015	ADDENDUM 6
	6-15-2015	BID DOCUMENT

PROJECT NUMBER:	44578
DESIGNED BY:	JN
DRAWN BY:	SA
FIELD CHECK:	NA
APPROVED:	FT

SHEET TITLE:
ELECTRICAL TENTH FLOOR POWER PLAN, PART A

BUILDING NUMBER: 102

DRAWING NUMBER: E-110-2A

SHEET

9/22/2015 12:56:40 PM

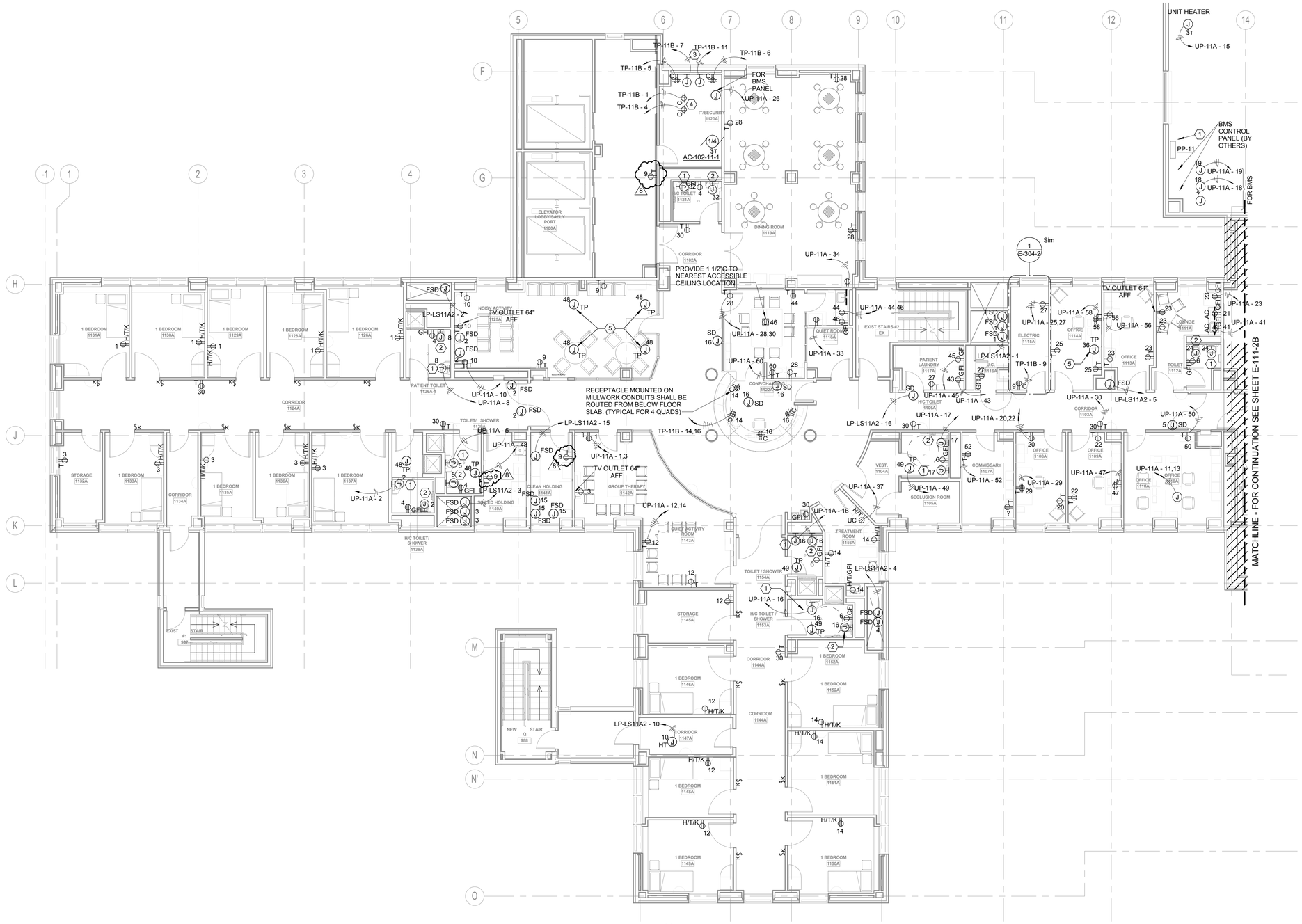

1 ELEVENTH FLOOR POWER PLAN

NOTES:

1. FOR SYMBOLS AND ABBREVIATIONS, SEE DRAWING E-001.
2. FOR PANEL SCHEDULES, SEE DRAWINGS IN THE E500 SERIES.
3. UON, ALL RECEPTACLES AND JUNCTION BOXES ON THIS PLAN ARE CONNECTED TO THE NEAREST UP PANEL. PROVIDE ONE (1) 120V-20A-1P CIRCUIT PER (8) CONVENIENCE RECEPTACLES (1500W PER CIRCUIT MAX).
4. REFER TO TELECOM DRAWINGS FOR EXACT LOCATION AND QUANTITY OF TELECOM DEVICES.
5. REFER TO FIRE ALARM DRAWINGS FOR EXACT LOCATION AND QUANTITY OF FIRE ALARM DEVICES.
6. REFER TO SECURITY DRAWINGS FOR EXACT LOCATION AND QUANTITY OF SECURITY DEVICES.
7. REFER TO MECHANICAL AND PLUMBING DRAWINGS FOR EXACT EQUIPMENT SIZE AND LOCATION.
8. FOR MECHANICAL AND PLUMBING EQUIPMENT UNDER 1/2 HP, PROVIDE 20A-1P-120V CIRCUIT FROM THE NEAREST UP PANEL.
9. FOR MECHANICAL AND PLUMBING EQUIPMENT 1/2 TO 3 HP, PROVIDE 20A-3P-480V CIRCUIT FROM THE NEAREST DISTRIBUTION PANEL. (13500W MAX LOAD PER CIRCUIT)

KEY NOTES:

1. PROVIDE JUNCTION BOX AND FINAL CONNECTION FOR FAUCET TRANSFORMER. COORDINATE LOCATION WITH PLUMBING DRAWINGS.
2. PROVIDE JUNCTION BOX AND FINAL CONNECTION FOR TOILET TRANSFORMER. COORDINATE LOCATION WITH PLUMBING DRAWINGS.
3. PROVIDE 1-20A DEDICATED CIRCUIT FROM NEAREST CRITICAL PANEL (LP-CR) FOR EACH JUNCTION BOX SERVING PAS TRANSPONDER, ACCESS CONTROL, AND CCTV. SEE SECURITY DRAWINGS FOR EXACT LOCATIONS AND EQUIPMENT INFORMATION.
4. RECEPTACLES SHALL BE MOUNTED TO RACK.
5. PROVIDE JUNCTION BOX AND FINAL CONNECTION FOR TAP PRIMER. COORDINATE LOCATION WITH PLUMBING DRAWINGS.

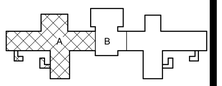

PROJECT NORTH

0 4' 8' 16'
SCALE: 1/8" = 1'-0"

REVISED DRAWING 09/24/2015

NEW YORK STATE OF OPPORTUNITY. Office of General Services

DESIGN & CONSTRUCTION

CONSULTANTS:

RBSD ARCHITECTS P.C. | STV 100 Years

A Joint Venture
225 Park Avenue South
New York, New York 10003

WARNING:
THE ALTERATION OF THIS MATERIAL IN ANY WAY, UNLESS DONE UNDER THE DIRECTION OF A COMPARABLE PROFESSIONAL, I.E. ARCHITECT FOR AN ARCHITECT, ENGINEER FOR AN ENGINEER OR LANDSCAPE ARCHITECT FOR A LANDSCAPE ARCHITECT, IS A VIOLATION OF THE NEW YORK STATE EDUCATION LAW AND/OR REGULATIONS AND IS A CLASS 'A' MISDEMEANOR.

CONTRACT:
CONSTRUCTION

TITLE:
MAJOR BUILDING RENOVATIONS FOR THE MANHATTAN FORENSIC RELOCATION

LOCATION: MANHATTAN PSYCHIATRIC CENTER, BUILDING No. 102
600 EAST 125TH STREET WARDS ISLAND, NY 10035

CLIENT:
NYS OFFICE OF MENTAL HEALTH

MARK	DATE	DESCRIPTION
8	09/24/2015	ADDENDUM 8
6	9-3-2015	ADDENDUM 6
	6-15-2015	BID DOCUMENT

PROJECT NUMBER:	44578
DESIGNED BY:	JN
DRAWN BY:	SA
FIELD CHECK:	NA
APPROVED:	FT

SHEET TITLE:
ELECTRICAL ELEVENTH FLOOR POWER PLAN, PART A

BUILDING NUMBER: 102

DRAWING NUMBER: E-111-2A

SHEET

9/22/2015 12:56:54 PM

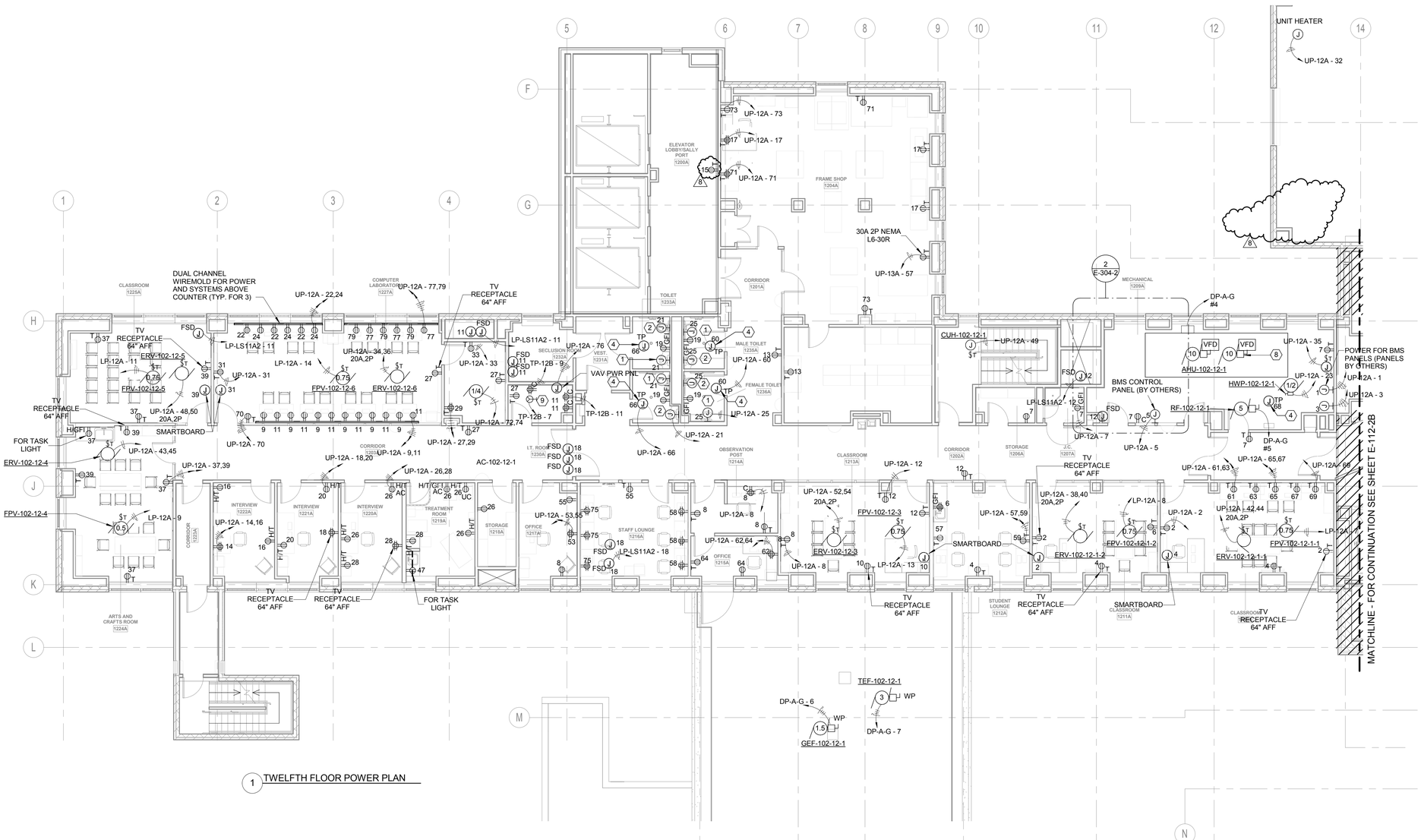

1 TWELFTH FLOOR POWER PLAN

NOTES:

1. FOR SYMBOLS AND ABBREVIATIONS, SEE DRAWING E-001.
2. FOR PANEL SCHEDULES, SEE DRAWINGS IN THE E500 SERIES.
3. REFER TO TELECOM DRAWINGS FOR EXACT LOCATION AND QUANTITY OF TELECOM DEVICES.
4. REFER TO FIRE ALARM DRAWINGS FOR EXACT LOCATION AND QUANTITY OF FIRE ALARM DEVICES.
5. REFER TO SECURITY DRAWINGS FOR EXACT LOCATION AND QUANTITY OF SECURITY DEVICES.
6. REFER TO MECHANICAL AND PLUMBING DRAWINGS FOR EXACT EQUIPMENT SIZE AND LOCATION.
7. REFER TO DRAWING E-600-2 FOR FEEDER SIZES OF MECHANICAL EQUIPMENT. (TYPICAL)
8. ALL RECEPTACLES LOCATED WITHIN SIX FEET OF A SINK SHALL BE OF THE GFI TYPE.
9. ALL JUNCTION BOXES FOR FIRE SMOKE DAMPERS (FSD) SHALL BE CIRCUITED FROM 120V LIFE SAFETY PANEL LP-LS, A2. CONNECTION OF MOTORIZED DAMPERS SHALL NOT EXCEED 4 PER CIRCUIT

KEY NOTES:

1. PROVIDE JUNCTION BOX AND FINAL CONNECTION FOR FAUCET TRANSFORMER. COORDINATE LOCATION WITH PLUMBING DRAWINGS.
2. PROVIDE JUNCTION BOX AND FINAL CONNECTION FOR TOILET TRANSFORMER. COORDINATE LOCATION WITH PLUMBING DRAWINGS.
3. PROVIDE 1-20A DEDICATED CIRCUIT FROM NEAREST CRITICAL PANEL (LP-CR) FOR EACH JUNCTION BOX SERVING PAS TRANSPONDER, ACCESS CONTROL, AND CCTV. SEE SECURITY DRAWINGS FOR EXACT LOCATIONS AND EQUIPMENT INFORMATION.
4. PROVIDE JUNCTION BOX AND FINAL CONNECTION FOR TRAP PRIMER. COORDINATE LOCATION WITH PLUMBING DRAWINGS.
5. NOT USED.
6. ALL ELECTRICAL PANELS LOCATED WITHIN THE MECHANICAL ROOMS SHALL BE PROVIDED WITH THE CODE REQUIRED CLEARANCES. ELECTRICAL CONTRACTOR SHALL COORDINATE FINAL LAYOUTS WITH MECHANICAL AND PLUMBING CONTRACTORS PRIOR TO ROUGH IN. ABSOLUTELY NO PIPING, DUCT OR OTHER SYSTEMS FOREIGN TO ELECTRICAL INSTALLATION ARE ALLOW ABOVE PANELS.
7. ALL RECEPTACLES LOCATED WITHIN SIX FEET OF A SINK SHALL BE OF THE GFI TYPE.
8. COORDINATE LOCATION OF DISCONNECT SWITCHES WITH MECH. CONTRACTOR TO KEEP N.E.C. CLEARANCES AS REQUIRED. DISCONNECTS SHALL BE INSTALLED IN AN ACCESSIBLE LOCATION
9. PROVIDE 30A,1P NEMA L5-30R TWISTLOCK RECEPTACLE AND 2#10 & 1#10G-3/4"C.

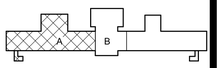

PROJECT NORTH

SCALE: 1/8" = 1'-0"

REVISED DRAWING 09/24/2015

NEW YORK STATE OF OPPORTUNITY. Office of General Services

DESIGN & CONSTRUCTION

CONSULTANTS:

RBSD ARCHITECTS P.C. | STV 100 Years

A Joint Venture

225 Park Avenue South
New York, New York 10003

WARNING:
THE ALTERATION OF THIS MATERIAL IN ANY WAY, UNLESS DONE UNDER THE DIRECTION OF A COMPARABLE PROFESSIONAL, I.E. ARCHITECT FOR AN ARCHITECT, ENGINEER FOR AN ENGINEER OR LANDSCAPE ARCHITECT FOR A LANDSCAPE ARCHITECT, IS A VIOLATION OF THE NEW YORK STATE EDUCATION LAW AND/OR REGULATIONS AND IS A CLASS 'A' MISDEMEANOR.

CONTRACT: CONSTRUCTION

TITLE: MAJOR BUILDING RENOVATIONS FOR THE MANHATTAN FORENSIC RELOCATION

LOCATION: MANHATTAN PSYCHIATRIC CENTER, BUILDING No. 102
600 EAST 125TH STREET WARDS ISLAND, NY 10035

CLIENT: NYS OFFICE OF MENTAL HEALTH

MARK	DATE	DESCRIPTION
8	09/24/2015	ADDENDUM 8
6	9-3-2015	ADDENDUM 6
	6-15-2015	BID DOCUMENT

PROJECT NUMBER:	44578
DESIGNED BY:	JN
DRAWN BY:	SA
FIELD CHECK:	NA
APPROVED:	FT

SHEET TITLE:
ELECTRICAL TWELFTH FLOOR POWER PLAN, PART A

BUILDING NUMBER: 102

DRAWING NUMBER: E-112-2A

SHEET

9/22/2015 12:57:07 PM

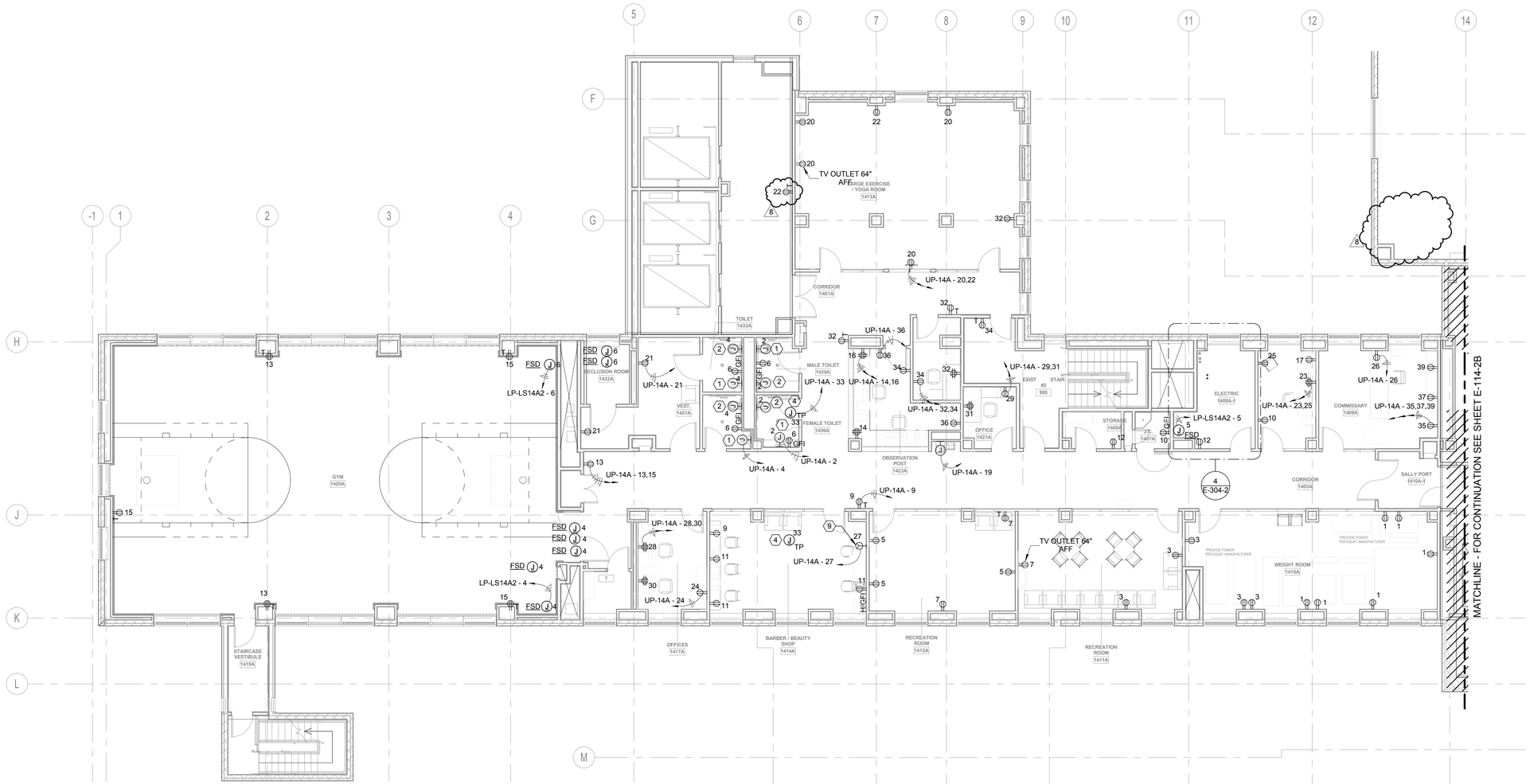

1 FOURTEENTH FLOOR POWER PLAN

NOTES:

1. FOR SYMBOLS AND ABBREVIATIONS, SEE DRAWING E-001.
2. FOR PANEL SCHEDULES, SEE DRAWINGS IN THE E500 SERIES.
3. UON, ALL RECEPTACLES AND JUNCTION BOXES ON THIS PLAN ARE CONNECTED TO THE NEAREST UP PANEL. PROVIDE ONE (1) 120V-20A-1P CIRCUIT PER (8) CONVENIENCE RECEPTACLES (1500W PER CIRCUIT MAX).
4. REFER TO TELECOM DRAWINGS FOR EXACT LOCATION AND QUANTITY OF TELECOM DEVICES.
5. REFER TO FIRE ALARM DRAWINGS FOR EXACT LOCATION AND QUANTITY OF FIRE ALARM DEVICES.
6. REFER TO SECURITY DRAWINGS FOR EXACT LOCATION AND QUANTITY OF SECURITY DEVICES.
7. REFER TO MECHANICAL AND PLUMBING DRAWINGS FOR EXACT EQUIPMENT SIZE AND LOCATION.
8. FOR MECHANICAL AND PLUMBING EQUIPMENT UNDER 1/2 HP, PROVIDE 20A-1P-120V CIRCUIT FROM THE NEAREST UP PANEL.
9. FOR MECHANICAL AND PLUMBING EQUIPMENT 1/2 TO 3 HP, PROVIDE 20A-3P-480V CIRCUIT FROM THE NEAREST DISTRIBUTION PANEL. (13500W MAX LOAD PER CIRCUIT)

KEY NOTES:

1. PROVIDE JUNCTION BOX AND FINAL CONNECTION FOR FAUCET TRANSFORMER. COORDINATE LOCATION WITH PLUMBING DRAWINGS.
2. PROVIDE JUNCTION BOX AND FINAL CONNECTION FOR TOILET TRANSFORMER. COORDINATE LOCATION WITH PLUMBING DRAWINGS.
3. PROVIDE 1-20A DEDICATED CIRCUIT FROM NEAREST CRITICAL PANEL (LP-CR) FOR EACH JUNCTION BOX SERVING PAS TRANSPONDER, ACCESS CONTROL, AND CCTV. SEE SECURITY DRAWINGS FOR EXACT LOCATIONS AND EQUIPMENT INFORMATION.
4. PROVIDE JUNCTION BOX AND FINAL CONNECTION FOR TRAP PRIMER. COORDINATE LOCATION WITH PLUMBING DRAWINGS.
5. NOT USED.
6. ALL ELECTRICAL PANELS LOCATED WITHIN THE MECHANICAL ROOMS SHALL BE PROVIDED WITH THE CODE REQUIRED CLEARANCES. ELECTRICAL CONTRACTOR SHALL COORDINATE FINAL LAYOUTS WITH MECHANICAL AND PLUMBING CONTRACTORS PRIOR TO ROUGH IN. ABSOLUTELY NO PIPING, DUCT OR OTHER SYSTEMS FOREIGN TO ELECTRICAL INSTALLATION ARE ALLOW ABOVE PANELS.
7. ALL RECEPTACLES LOCATED WITHIN SIX FEET OF A SINK SHALL BE OF THE GFI TYPE.
8. COORDINATE LOCATION OF DISCONNECT SWITCHES WITH MECH. CONTRACTOR TO KEEP N.E.C. CLEARANCES AS REQUIRED. DISCONNECTS SHALL BE INSTALLED IN AN ACCESSIBLE LOCATION
9. PROVIDE 30A,1P NEMA L5-30R TWISTLOCK RECEPTACLE WITH 2#10 & 1#10G-3/4"C.

PROJECT NORTH

0 4' 8' 16'
SCALE: 1/8" = 1'-0"

REVISED DRAWING 09/24/2015

NEW YORK STATE OF OPPORTUNITY. Office of General Services

DESIGN & CONSTRUCTION

CONSULTANTS:

RBSD ARCHITECTS P.C. | STV 100 Years

A Joint Venture
225 Park Avenue South
New York, New York 10003

WARNING:
THE ALTERATION OF THIS MATERIAL IN ANY WAY, UNLESS DONE UNDER THE DIRECTION OF A COMPARABLE PROFESSIONAL, I.E. ARCHITECT FOR AN ARCHITECT, ENGINEER FOR AN ENGINEER OR LANDSCAPE ARCHITECT FOR A LANDSCAPE ARCHITECT, IS A VIOLATION OF THE NEW YORK STATE EDUCATION LAW AND/OR REGULATIONS AND IS A CLASS 'A' MISDEMEANOR.

CONTRACT: CONSTRUCTION

TITLE: MAJOR BUILDING RENOVATIONS FOR THE MANHATTAN FORENSIC RELOCATION

LOCATION: MANHATTAN PSYCHIATRIC CENTER, BUILDING No. 102
600 EAST 125TH STREET WARDS ISLAND, NY 10035

CLIENT: NYS OFFICE OF MENTAL HEALTH

MARK	DATE	DESCRIPTION
8	09/24/2015	ADDENDUM 8
6	9-3-2015	ADDENDUM 6
	6-15-2015	BID DOCUMENT

PROJECT NUMBER:	44578
DESIGNED BY:	JN
DRAWN BY:	SA
FIELD CHECK:	NA
APPROVED:	FT

SHEET TITLE:
ELECTRICAL FOURTEENTH FLOOR POWER PLAN, PART A

BUILDING NUMBER: 102

DRAWING NUMBER: E-114-2A

SHEET

9/22/2015 12:57:17 PM

1 SIXTEENTH FLOOR POWER PLAN

REVISED DRAWING 09/24/2015

NOTES:

1. FOR SYMBOLS AND ABBREVIATIONS, SEE DRAWING E-001.
2. FOR PANEL SCHEDULES, SEE DRAWINGS IN THE E500 SERIES.
3. UON, ALL RECEPTACLES AND JUNCTION BOXES ON THIS PLAN ARE CONNECTED TO THE NEAREST UP PANEL. PROVIDE ONE (1) 120V-20A-1P CIRCUIT PER (8) CONVENIENCE RECEPTACLES (1500W PER CIRCUIT MAX).
4. REFER TO TELECOM DRAWINGS FOR EXACT LOCATION AND QUANTITY OF TELECOM DEVICES.
5. REFER TO FIRE ALARM DRAWINGS FOR EXACT LOCATION AND QUANTITY OF FIRE ALARM DEVICES.
6. REFER TO SECURITY DRAWINGS FOR EXACT LOCATION AND QUANTITY OF SECURITY DEVICES.
7. REFER TO MECHANICAL AND PLUMBING DRAWINGS FOR EXACT EQUIPMENT SIZE AND LOCATION.
8. FOR MECHANICAL AND PLUMBING EQUIPMENT UNDER 1/2 HP, PROVIDE 20A-1P-120V CIRCUIT FROM THE NEAREST UP PANEL.
9. FOR MECHANICAL AND PLUMBING EQUIPMENT 1/2 TO 3 HP, PROVIDE 20A-3P-480V CIRCUIT FROM THE NEAREST DISTRIBUTION PANEL. (13500W MAX LOAD PER CIRCUIT)

KEY NOTES:

1. ELECTRICAL CONTRACTOR IS RESPONSIBLE FOR PROVIDING A SINGLE POINT OF CONNECTION TO EQUIPMENT. ALL REMAINING WIRING DOWNSTREAM OF A SINGLE POINT OF CONNECTION SHALL BE FURNISH AND INSTALL BY OTHERS.
2. ALL ELECTRICAL PANELS LOCATED WITHIN THE MECHANICAL ROOMS AND ELEVATOR MACHINE ROOM SHALL BE PROVIDED WITH THE CODE REQUIRED CLEARANCES. ELECTRICAL CONTRACTOR SHALL COORDINATE FINAL LAYOUTS WITH MECHANICAL AND PLUMBING CONTRACTORS PRIOR TO ROUGH IN. ABSOLUTELY NO PIPING, DUCT OR OTHER SYSTEMS FOREIGN TO ELECTRICAL INSTALLATION ARE ALLOW ABOVE PANELS.
3. COORDINATE LOCATION OF DISCONNECT SWITCHES WITH MECH. CONTRACTOR TO KEEP N.E.C. CLEARANCES AS REQUIRED. DISCONNECTS SHALL BE INSTALLED IN AN ACCESSIBLE LOCATION
4. ELEVATOR DISCONNECT SWITCH TO BE PROVIDED WITH AUXILIARY CONTACTS FOR INTERCONNECTION FROM ELEVATOR CONTROLLER TO MONITOR SWITCH STAUS (OPEN OR CLOSED) AND SHALL NOT ACTIVATE ELEVATOR RECALL WHEN SWITCH IS IN THE OPEN POSITION. (TYPICAL)
5. PROVIDE GFCI TYPE CIRCUIT BREAKER FOR ELEVATOR CAB LTG AND POWER CIRCUIT.
6. ELEVATOR CONTROLLER AND MOTORS PROVIDED BY OTHERS (TYPICAL). ELECTRICAL CONTRACTOR TO COORDINATE EQUIPMENT FINAL LOCATIONS BASED ON ELEVATOR MANUFACTURER DOCUMENTS.
7. PROVIDE 1" EMPTY CONDUIT WITH PULLSTRING TO ELEVATOR STAtUS PANEL AND ELEVATOR ATS FOR RECALL .
8. PROVIDE 1" EMPTY CONDUIT WITH PULLSTRING TO FIRE ALARM CONTROL PANEL. REFER TO FA DRAWINGS FOR FACP LOCATION.
9. PROVIDE 1" EMPTY CONDUIT WITH PULLSTRING TO MAIN TELECOMM ROOM.
10. PROVIDE 1" EMPTY CONDUIT WITH PULLSTRING TO SECURITY SYSTEM.
11. PROVIDE ELEVATOR DISCONNECT IN ACCCORDANCE WITH NEC 620.51.
12. A SEPARATE CIRCUIT SHALL BE PROVIDED TO FEED EACH ELEVATOR CAB LIGHTING, RECEPTACLES AND AIR CONDITIONING.
13. PROVIDE MAIN BREAKER OF DP-EL WITH ALL REQUIRED SHUNT TRIP ACCESORIES FOR INTERPHASE WITH FIRE ALARM SYSTEMS AND ELEVATOR SHUTDOWN.
14. PROVIDE SINGLE CIRCUIT FOR INDOOR AND OUTDOOR UNITS. POWER PROVIDED VIA OUTDDOR UNIT LOCATED IN THE 17TH FLOOR REFER TO DRAWGIN E-117-2 FOR CIRCUIT AND WIRE SIZES.

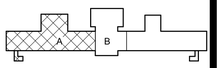

PROJECT NORTH

0 4' 8' 16'
SCALE: 1/8" = 1'-0"

NEW YORK STATE OF OPPORTUNITY. Office of General Services

DESIGN & CONSTRUCTION

CONSULTANTS:

RBSD ARCHITECTS P.C. | STV 100 Years

A Joint Venture

225 Park Avenue South
New York, New York 10003

WARNING:
THE ALTERATION OF THIS MATERIAL IN ANY WAY, UNLESS DONE UNDER THE DIRECTION OF A COMPARABLE PROFESSIONAL, I.E. ARCHITECT FOR AN ARCHITECT, ENGINEER FOR AN ENGINEER OR LANDSCAPE ARCHITECT FOR A LANDSCAPE ARCHITECT, IS A VIOLATION OF THE NEW YORK STATE EDUCATION LAW AND/OR REGULATIONS AND IS A CLASS 'A' MISDEMEANOR.

CONTRACT: CONSTRUCTION

TITLE: MAJOR BUILDING RENOVATIONS FOR THE MANHATTAN FORENSIC RELOCATION

LOCATION: MANHATTAN PSYCHIATRIC CENTER, BUILDING No. 102
600 EAST 125TH STREET WARDS ISLAND, NY 10035

CLIENT: NYS OFFICE OF MENTAL HEALTH

MARK	DATE	DESCRIPTION
8	09/24/2015	ADDENDUM 8
	6-15-2015	BID DOCUMENT

PROJECT NUMBER:	44578
DESIGNED BY:	JN
DRAWN BY:	SA
FIELD CHECK:	NA
APPROVED:	FT

SHEET TITLE:

ELECTRICAL SIXTEENTH FLOOR POWER PLAN

BUILDING NUMBER: 102

DRAWING NUMBER: E-116-2

SHEET

9/22/2015 12:57:24 PM

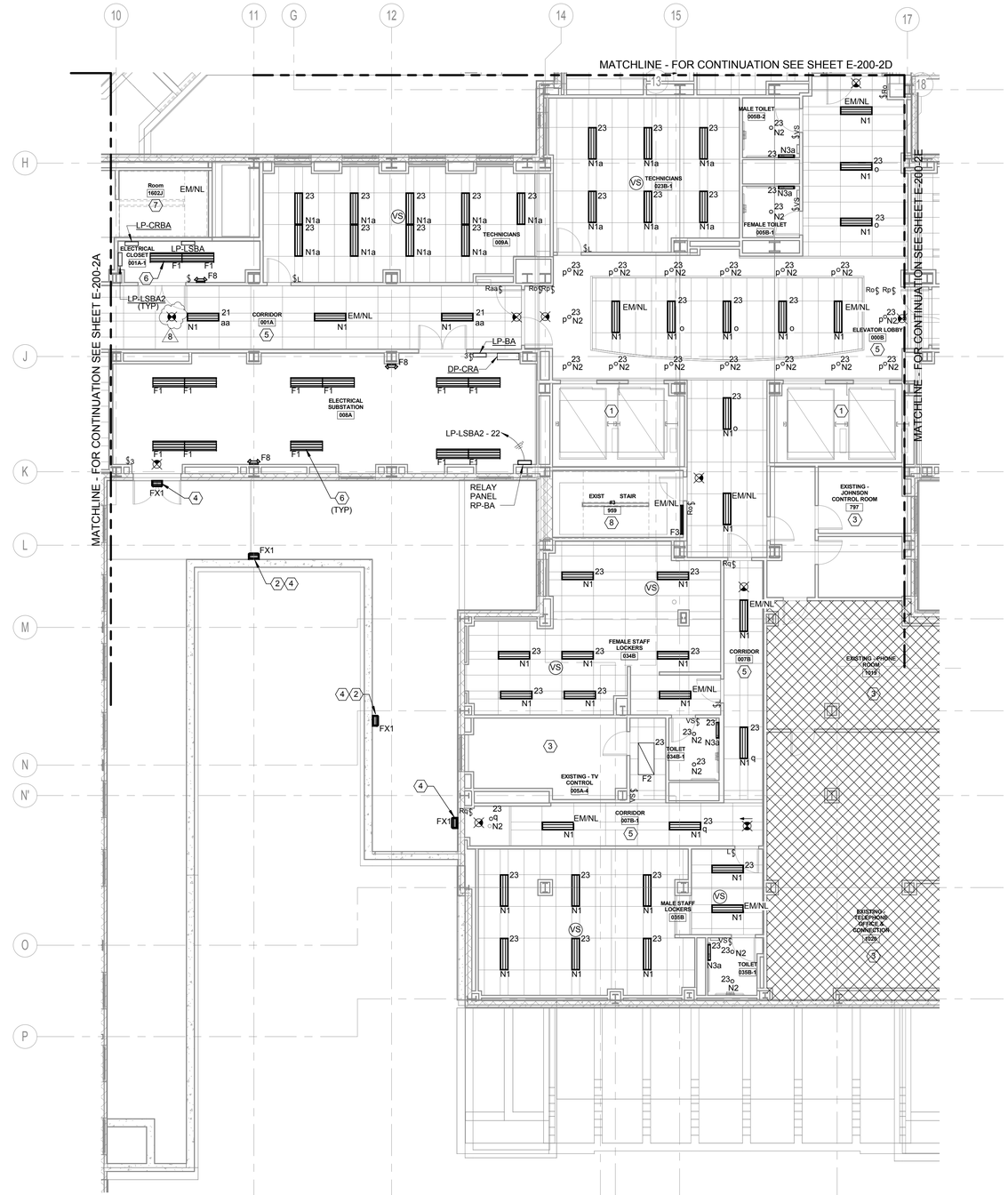

1 BASEMENT LIGHTING PLAN

NOTES:

1. FOR SYMBOLS AND ABBREVIATIONS, SEE DRAWING E-001.
2. FOR PANEL SCHEDULES, SEE E-600 SERIES DRAWINGS.
3. UON. ALL LIGHTING FIXTURES AND DEVICES ON THIS PLAN ARE CONNECTED TO PANEL 'LP-BA', CIRCUIT NUMBER AS INDICATED.
4. ALL FIXTURES MARKED 'EM/NL' SHALL BE UNSWITCHED AND ON PANEL LP-LSBA, CIRCUIT NO. 9, UON.
5. REFER TO ARCHITECTURAL 'AR' SERIES DRAWINGS FOR EXIT LIGHT LOCATIONS AND QUANTITIES. CONNECT ALL EXIT SIGNS TO PANEL LP-LSBA, CIRCUIT NO. 10.

KEYNOTES:

1. CONNECT EXISTING ELEVATOR PIT LIGHTING TO PANEL LP-CRBA, CIRCUIT NO. 8.
2. WALL MOUNT 7'-0" ABOVE STAIR HEIGHT. REFER TO ARCHITECTURAL DRAWINGS FOR STAIR DETAILS.
3. CONNECT EXISTING LIGHTING TO PANEL UP-BA.
4. CONNECT TO PANEL LP-LSBA, CIRCUIT NO. 6 VIA RELAY PANEL RP-BA, RELAY 's'.
5. FIXTURES IN THIS ROOM SHALL BE CONTROLLED VIA RELAY PANEL RP-BA, CONTROL CIRCUIT INDICATED BY LOWER CASE SUBSCRIPT AT FIXTURE. SEE RELAY PANEL SCHEDULES ON DRAWINGS E-618-2 THRU E-620-2.
6. NORMAL/EMERGENCY FIXTURE - CONNECT TO PANEL LP-CRBA, CIRCUIT NO. 7
7. CONNECT STAIR NORMAL/EMERGENCY LIGHTING TO PANEL LP-LSBA, CIRCUIT NO.20.
8. CONNECT STAIR NORMAL/EMERGENCY LIGHTING TO PANEL LP-LSBA, CIRCUIT NO.22

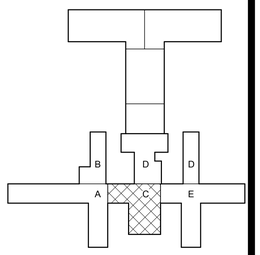

PROJECT NORTH

0 4' 8' 16'
SCALE: 1/8" = 1'-0"

REVISED DRAWING 09/24/2015

NEW YORK STATE OF OPPORTUNITY. Office of General Services

DESIGN & CONSTRUCTION

CONSULTANTS:

RBSD ARCHITECTS P.C. | STV 100 Years

A Joint Venture
225 Park Avenue South
New York, New York 10003

WARNING:
THE ALTERATION OF THIS MATERIAL IN ANY WAY, UNLESS DONE UNDER THE DIRECTION OF A COMPARABLE PROFESSIONAL. I.E. ARCHITECT FOR AN ARCHITECT, ENGINEER FOR AN ENGINEER OR LANDSCAPE ARCHITECT FOR A LANDSCAPE ARCHITECT, IS A VIOLATION OF THE NEW YORK STATE EDUCATION LAW AND/OR REGULATIONS AND IS A CLASS 'A' MISDEMEANOR.

STATE OF NEW YORK · REDDY E. TAMAYO · LICENSED PROFESSIONAL ENGINEER · Lic. No. 071108

CONTRACT:
CONSTRUCTION

TITLE:
MAJOR BUILDING RENOVATIONS FOR THE MANHATTAN FORENSIC RELOCATION

LOCATION: MANHATTAN PSYCHIATRIC CENTER, BUILDING No. 102
600 EAST 125TH STREET WARDS ISLAND, NY 10035

CLIENT:
NYS OFFICE OF MENTAL HEALTH

MARK	DATE	DESCRIPTION
8	09/24/2015	ADDENDUM 8
	6-15-2015	BID DOCUMENT

PROJECT NUMBER:	44578
DESIGNED BY:	AN
DRAWN BY:	AN
FIELD CHECK:	NA
APPROVED:	FT

SHEET TITLE:
ELECTRICAL BASEMENT LIGHTING PLAN, PART C

BUILDING NUMBER: 102

DRAWING NUMBER: E-200-2C

SHEET

9/21/2015 4:07:15 PM

NOTES:

1. FOR SYMBOLS AND ABBREVIATIONS, SEE DRAWING E-001.
2. FOR PANEL SCHEDULES, SEE E-600 SERIES DRAWINGS.
3. UON, ALL LIGHTING FIXTURES AND DEVICES ON THIS PLAN ARE CONNECTED TO PANEL LP-1A. CIRCUIT NUMBER AS INDICATED.
4. ALL FIXTURES MARKED 'EM/NL' SHALL BE UNSWITCHED AND ON PANEL LP-LSBA CIRCUIT NO.13, UON.
5. REFER TO ARCHITECTURAL 'AR' SERIES DRAWINGS FOR EXIT LIGHT LOCATIONS AND QUANTITIES. CONNECT ALL EXIT SIGNS TO PANEL LP-LSBA CIRCUIT NO.14.

KEYNOTES:

1. FIXTURES IN THIS ROOM SHALL BE CONTROLLED VIA RELAY PANEL RP-1A. RELAY CONTROL CIRCUIT INDICATED BY LOWER CASE SUBSCRIPT AT FIXTURE. SEE RELAY PANEL SCHEDULES ON DRAWINGS E-622-2 THRU E-624-2.
2. NORMAL/EMERGENCY FIXTURE CONNECT TO PANEL LP-CR1A, CIRCUIT NUMBER 2.
3. CONNECT STAIR NORMAL/EMERGENCY LIGHTING TO PANEL LP-LSBA, CIRCUIT NO.22.
4. CONNECT STAIR NORMAL/EMERGENCY LIGHTING TO PANEL LP-LSBA, CIRCUIT NO.20.
5. FIRE COMMAND CENTER AND INCIDENT COMMAND CENTER LIGHTING SHALL BE NORMAL/EMERGENCY LIGHTING CONTROLLED VIA EMERGENCY LIGHTING CONTROL UNIT. SEE DETAIL '4' ON DRAWING E-505. CONNECT EMERGENCY LIGHTING CONTROL UNIT TO NORMAL CIRCUIT LP-1A-10, EMERGENCY CIRCUIT LP-LSBA-13.

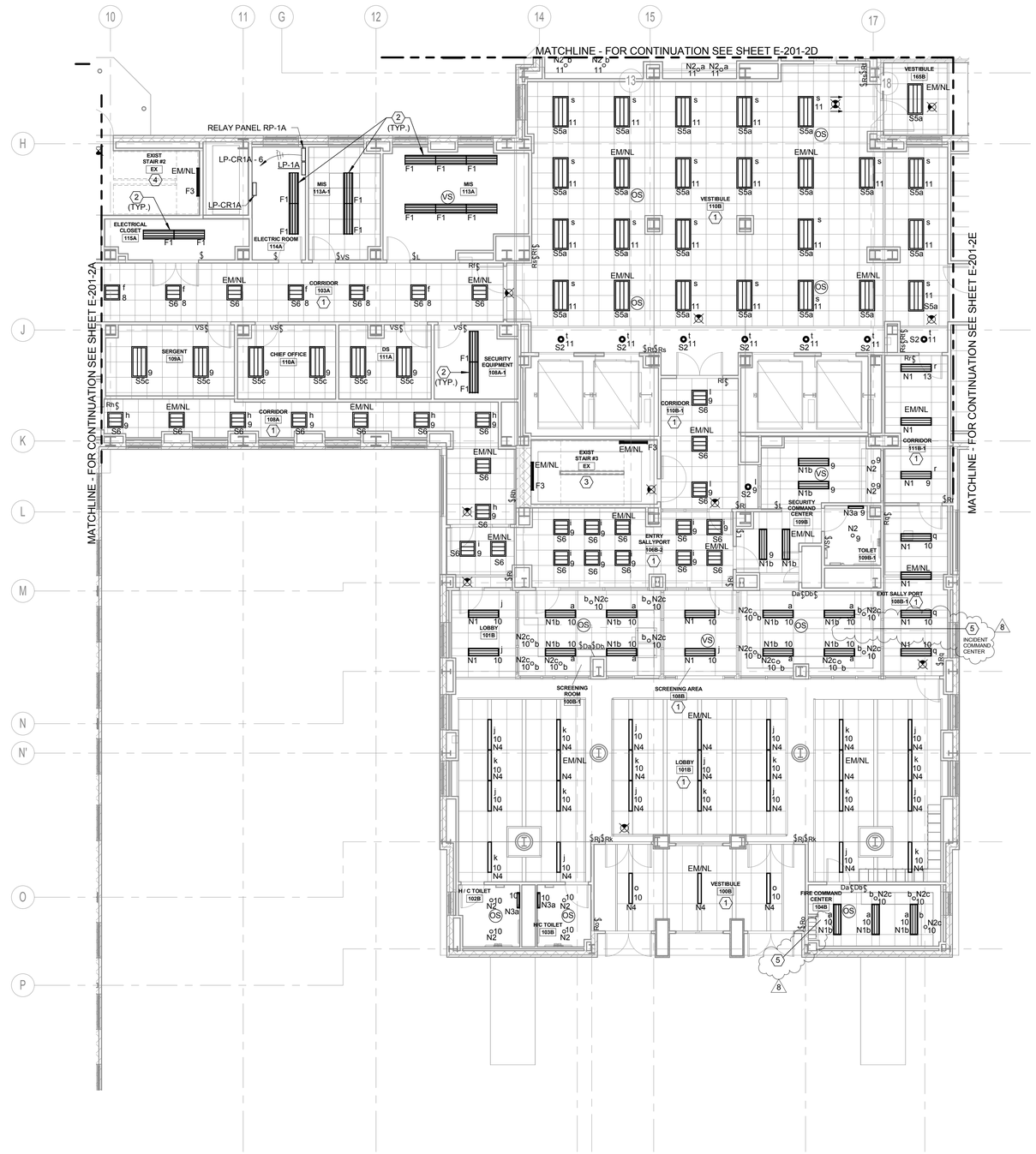

1 FIRST FLOOR LIGHTING PLAN

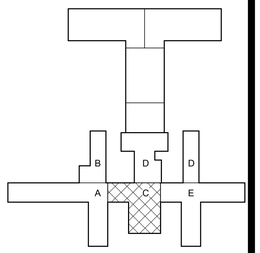

PROJECT NORTH

0 4' 8' 16'
SCALE: 1/8" = 1'-0"

REVISED DRAWING 09/24/2015

NEW YORK STATE OF OPPORTUNITY. Office of General Services

DESIGN & CONSTRUCTION

CONSULTANTS:

RBSD ARCHITECTS P.C. | STV 100 Years

A Joint Venture

225 Park Avenue South
New York, New York 10003

WARNING:
THE ALTERATION OF THIS MATERIAL IN ANY WAY, UNLESS DONE UNDER THE DIRECTION OF A COMPARABLE PROFESSIONAL. I.E. ARCHITECT FOR AN ARCHITECT, ENGINEER FOR AN ENGINEER OR LANDSCAPE ARCHITECT FOR A LANDSCAPE ARCHITECT, IS A VIOLATION OF THE NEW YORK STATE EDUCATION LAW AND/OR REGULATIONS AND IS A CLASS 'A' MISDEMEANOR.

STATE OF NEW YORK · REDDY E. TAMAYO · LICENSED PROFESSIONAL ENGINEER · Lic. No. 071105

CONTRACT:
CONSTRUCTION

TITLE:
MAJOR BUILDING RENOVATIONS FOR THE MANHATTAN FORENSIC RELOCATION

LOCATION: MANHATTAN PSYCHIATRIC CENTER, BUILDING No. 102
600 EAST 125TH STREET WARDS ISLAND, NY 10035

CLIENT:
NYS OFFICE OF MENTAL HEALTH

MARK	DATE	DESCRIPTION
8	09/24/2015	ADDENDUM 8
6	9-3-2015	ADDENDUM 6
	6-15-2015	BID DOCUMENT

PROJECT NUMBER:	44578
DESIGNED BY:	AN
DRAWN BY:	AN
FIELD CHECK:	NA
APPROVED:	FT

SHEET TITLE:
ELECTRICAL FIRST FLOOR LIGHTING PLAN, PART C

BUILDING NUMBER: 102

DRAWING NUMBER: E-201-2C

SHEET

9/21/2015 4:07:32 PM

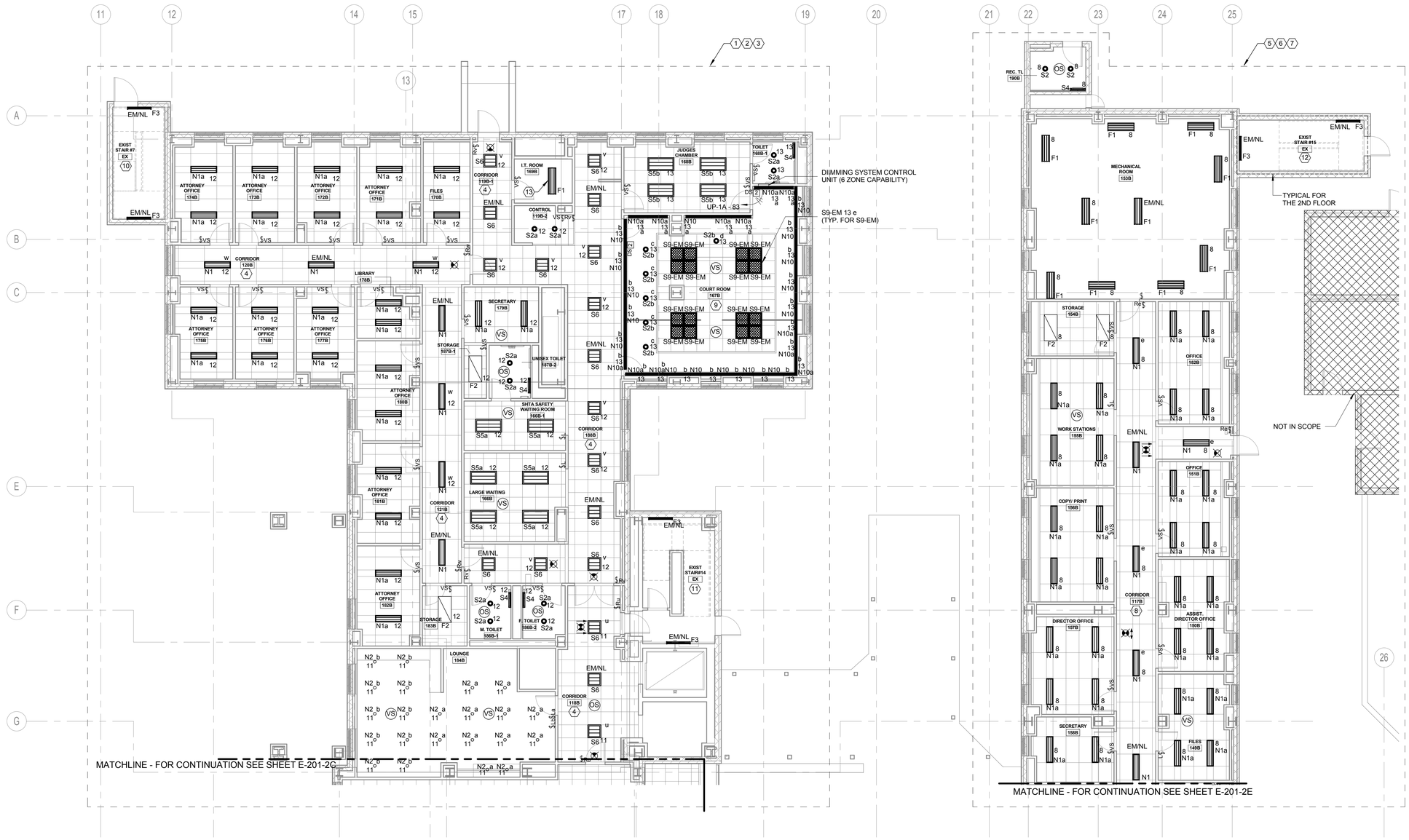

1 FIRST FLOOR LIGHTING PLAN

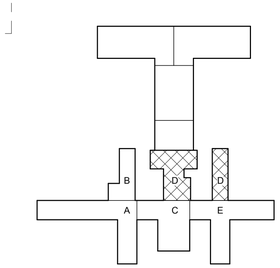

REVISED DRAWING 09/24/2015

SCALE: 1/8" = 1'-0"

NOTES:

1. FOR SYMBOLS AND ABBREVIATIONS, SEE DRAWING E-001.
2. FOR PANEL SCHEDULES, SEE E-600 SERIES DRAWINGS.

KEYNOTES:

1. UON. ALL LIGHTING FIXTURES IN THIS AREA ARE CONNECTED TO PANEL LP-1A, CIRCUIT NUMBER AS INDICATED.
2. UON. ALL FIXTURES IN THIS AREA MARKED 'EML/NL' SHALL BE UNSWITCHED AND ON PANEL LP-LSBA CIRCUIT NUMBER 13.
3. REFER TO ARCHITECTURAL 'AR' SERIES DRAWINGS FOR EXIT SIGN LOCATIONS AND QUANTITIES. ALL EXIT SIGNS IN THIS AREA SHALL BE CONNECTED TO PANEL LP-LSBA, CIRCUIT NUMBER 14.
4. FIXTURES IN THIS ROOM SHALL BE CONTROLLED VIA RELAY PANEL RP-1A. RELAY CONTROL CIRCUIT INDICATED BY LOWER CASE SUBSCRIPT AT FIXTURE. SEE RELAY PANEL SCHEDULES ON DRAWINGS E-622-2 THRU E-624-2.
5. UON. ALL FIXTURES IN THIS AREA ARE CONNECTED TO PANEL LP-1B, CIRCUIT NO AS INDICATED.
6. UON. ALL FIXTURES IN THIS AREA MARKED 'EM/NL' SHALL BE UNSWITCHED AND ON PANEL LP-LSBA, CIRCUIT NO.15.
7. REFER TO ARCHITECTURAL 'AR' SERIES DRAWINGS FOR EXIT SIGN LOCATIONS AND QUANTITIES. ALL EXIT SIGNS IN THIS AREA SHALL BE CONNECTED TO PANEL LP-LSBA, CIRCUIT NUMBER 16.
8. FIXTURES IN THIS ROOM SHALL BE CONTROLLED VIA RELAY PANEL RP-1B. RELAY CONTROL CIRCUIT INDICATED BY LOWER CASE SUBSCRIPT AT FIXTURE. SEE RELAY PANEL SCHEDULES ON DRAWINGS E-622-2 THRU E-624-2.
9. SEE COURTROOM DIMMING SYSTEM DIAGRAM, DRAWING E-503.
10. CONNECT STAIR NORMAL/EMERGENCY LIGHTING TO PANEL LP-LSBA, CIRCUIT NO.23.
11. CONNECT STAIR NORMAL/EMERGENCY LIGHTING TO PANEL LP-LSBA, CIRCUIT NO.24.
12. CONNECT STAIR NORMAL/EMERGENCY LIGHTING TO PANEL LP-LSBA, CIRCUIT NO.25.
13. NORMAL/EMERGENCY FIXTURE - CONNECT TO PANEL LP-CR1A, CIRCUIT NO.2.

NEW YORK STATE OF OPPORTUNITY. Office of General Services

DESIGN & CONSTRUCTION

CONSULTANTS:

RBSD ARCHITECTS P.C. | STV 100 Years

A Joint Venture
225 Park Avenue South
New York, New York 10003

WARNING:
THE ALTERATION OF THIS MATERIAL IN ANY WAY, UNLESS DONE UNDER THE DIRECTION OF A COMPARABLE PROFESSIONAL, I.E. ARCHITECT FOR AN ARCHITECT, ENGINEER FOR AN ENGINEER OR LANDSCAPE ARCHITECT FOR A LANDSCAPE ARCHITECT, IS A VIOLATION OF THE NEW YORK STATE EDUCATION LAW AND/OR REGULATIONS AND IS A CLASS 'A' MISDEMEANOR.

STATE OF NEW YORK · FREDDY E. TAMAYO · LICENSED PROFESSIONAL ENGINEER · No. 071108

CONTRACT: CONSTRUCTION

TITLE: MAJOR BUILDING RENOVATIONS FOR THE MANHATTAN FORENSIC RELOCATION

LOCATION: MANHATTAN PSYCHIATRIC CENTER, BUILDING No. 102
600 EAST 125TH STREET WARDS ISLAND, NY 10035

CLIENT: NYS OFFICE OF MENTAL HEALTH

MARK	DATE	DESCRIPTION
8	09/24/2015	ADDENDUM 8
6	9-3-2015	ADDENDUM 6
	6-15-2015	BID DOCUMENT

PROJECT NUMBER:	44578
DESIGNED BY:	AN
DRAWN BY:	AN
FIELD CHECK:	NA
APPROVED:	FT

SHEET TITLE:

ELECTRICAL FIRST FLOOR LIGHTING PLAN, PART D

BUILDING NUMBER: 102

DRAWING NUMBER: E-201-2D

SHEET

9/21/2015 4:07:51 PM

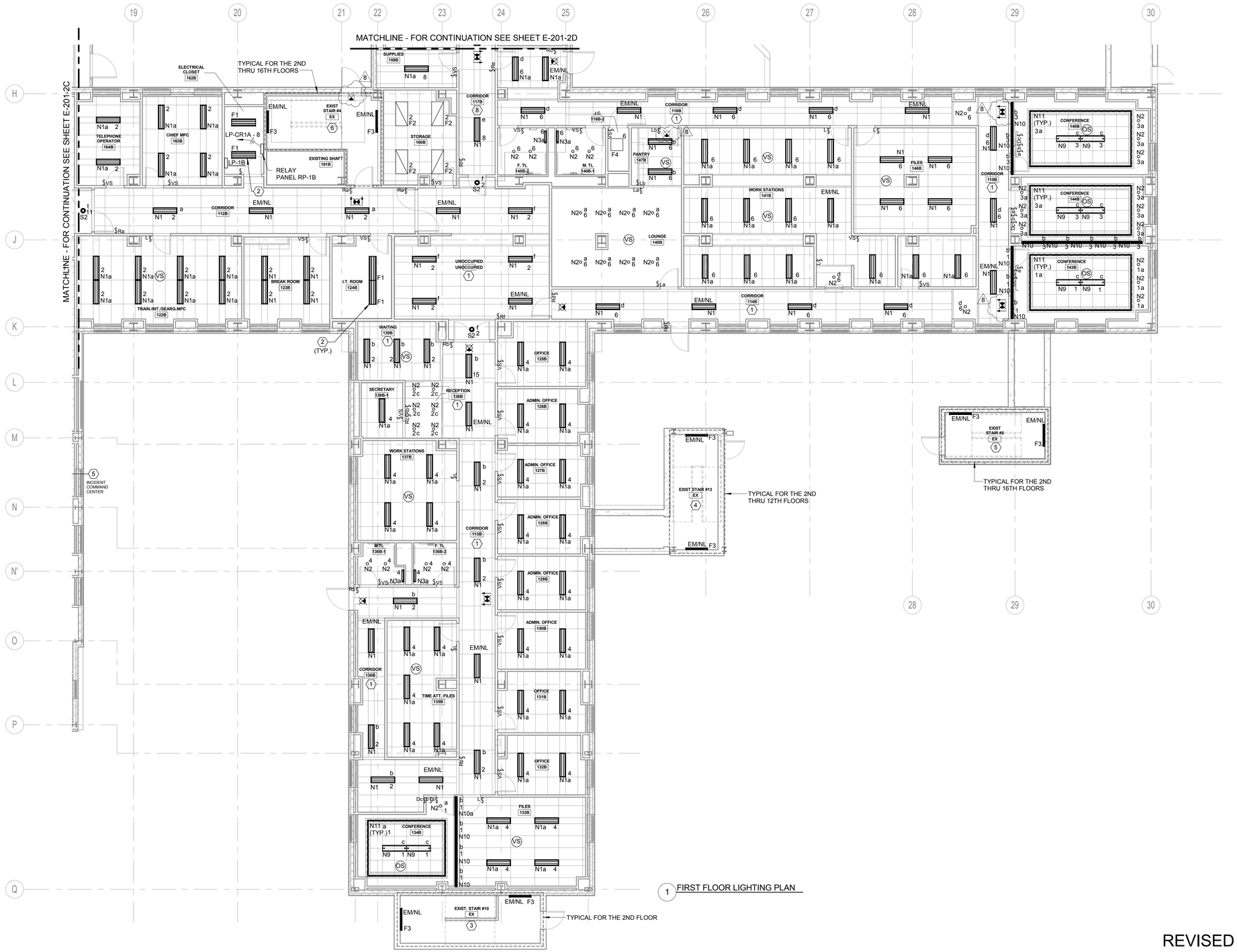

1 FIRST FLOOR LIGHTING PLAN

NOTES:

1. FOR SYMBOLS AND ABBREVIATIONS, SEE DRAWING E-001.
2. FOR PANEL SCHEDULES, SEE E-600 SERIES DRAWINGS.
3. UON, ALL LIGHTING FIXTURES AND DEVICES ON THIS PLAN ARE CONNECTED TO PANEL LP-1B, CIRCUIT NUMBER AS INDICATED.
4. UON. ALL FIXTURES MARKED 'EM/NL' SHALL BE UNSWITCHED AND ON PANEL LP-LSBA, CIRCUIT NO.15.
5. REFER TO ARCHITECTURAL 'AR' SERIES DRAWINGS FOR EXIT LIGHT LOCATIONS AND QUANTITIES. CONNECT ALL EXIT SIGNS TO PANEL LP-LSBA CIRCUIT NO.16.

KEYNOTES:

1. FIXTURES IN THIS ROOM SHALL BE CONTROLLED VIA RELAY PANEL RP-1B. RELAY CONTROL CIRCUIT INDICATED BY LOWER CASE SUBSCRIPT AT FIXTURE. SEE RELAY PANEL SCHEDULES ON DRAWINGS E-622-2 THRU E-624-2.
2. NORMAL/EMERGENCY FIXTURE-CONNECT TO PANEL LP-CR1A, CIRCUIT NUMBER 2.
3. CONNECT STAIR NORMAL/EMERGENCY LIGHTING TO PANEL LP-LSBA, CIRCUIT NO.26.
4. CONNECT STAIR NORMAL/EMERGENCY LIGHTING TO PANEL LP-LSBA, CIRCUIT NO.27.
5. CONNECT STAIR NORMAL/EMERGENCY LIGHTING TO PANEL LP-LSBA, CIRCUIT NO.28.
6. CONNECT STAIR NORMAL/EMERGENCY LIGHTING TO PANEL LP-LSBA, CIRCUIT NO.29.

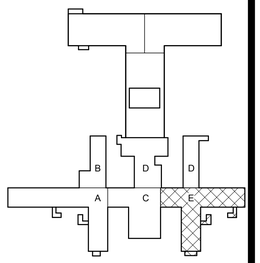

PROJECT NORTH

SCALE: 1/8" = 1'-0"

REVISED DRAWING 09/24/2015

NEW YORK STATE OF OPPORTUNITY. Office of General Services

DESIGN & CONSTRUCTION

CONSULTANTS:

RBSD ARCHITECTS P.C. | STV 100 Years

A Joint Venture

225 Park Avenue South
New York, New York 10003

WARNING:
THE ALTERATION OF THIS MATERIAL IN ANY WAY, UNLESS DONE UNDER THE DIRECTION OF A COMPARABLE PROFESSIONAL, I.E. ARCHITECT FOR AN ARCHITECT, ENGINEER FOR AN ENGINEER OR LANDSCAPE ARCHITECT FOR A LANDSCAPE ARCHITECT, IS A VIOLATION OF THE NEW YORK STATE EDUCATION LAW AND/OR REGULATIONS AND IS A CLASS 'A' MISDEMEANOR.

STATE OF NEW YORK · REDDY E. TAMAYO · LICENSED PE No. 071105 · PROFESSIONAL ENGINEER

CONTRACT:
CONSTRUCTION

TITLE:
MAJOR BUILDING RENOVATIONS FOR THE MANHATTAN FORENSIC RELOCATION

LOCATION:
MANHATTAN PSYCHIATRIC CENTER, BUILDING No. 102
600 EAST 125TH STREET WARDS ISLAND, NY 10035

CLIENT:
NYS OFFICE OF MENTAL HEALTH

MARK	DATE	DESCRIPTION
8	09/24/2015	ADDENDUM 8
	6-15-2015	BID DOCUMENT

PROJECT NUMBER:	44578
DESIGNED BY:	AN
DRAWN BY:	AN
FIELD CHECK:	NA
APPROVED:	FT

SHEET TITLE:
ELECTRICAL FIRST FLOOR LIGHTING PLAN, PART E

BUILDING NUMBER: 102

DRAWING NUMBER: E-201-2E

SHEET

9/21/2015 4:08:10 PM

1 SECOND FLOOR LIGHTING PLAN

NOTES:

1. FOR SYMBOLS AND ABBREVIATIONS, SEE DRAWING E-001.
2. FOR PANEL SCHEDULES, SEE E-600 SERIES DRAWINGS.
3. UON, ALL LIGHTING FIXTURES AND DEVICES ON THIS PLAN ARE CONNECTED TO PANEL LP-2.
4. ALL FIXTURES MARKED 'EM/NL' SHALL BE UNSWITCHED AND ON PANEL LP-LS3A CIRCUIT #1, UON.
5. REFER TO ARCHITECTURAL 'AR' SERIES DRAWINGS FOR EXIT LIGHT LOCATIONS AND QUANTITIES. CONNECT EXIT SIGNS TO PANEL LP-LS3A, CIRCUIT NO.2.

KEYNOTES:

1. FIXTURES IN THIS ROOM SHALL BE CONTROLLED VIA RELAY PANEL RP-2A. RELAY CONTROL CIRCUIT INDICATED BY LOWER CASE SUBSCRIPT AT FIXTURE. SEE RELAY PANEL SCHEDULES ON DRAWINGS E-622-2 THRU E-624-2.
2. NORMAL/EMERGENCY FIXTURE-CONNECT TO PANEL LP-CR1A, CIRCUIT #4.
3. CONNECT STAIR NORMAL/EMERGENCY LIGHTING TO PANEL LP-LSBA, CIRCUIT NO. 17.
4. CONNECT STAIR NORMAL/EMERGENCY LIGHTING TO PANEL LP-LSBA, CIRCUIT NO. 18.
5. CONNECT STAIR NORMAL/EMERGENCY LIGHTING TO PANEL LP-LSBA, CIRCUIT NO. 19.
6. CONNECT STAIR NORMAL/EMERGENCY LIGHTING TO PANEL LP-LSBA, CIRCUIT NO. 20.

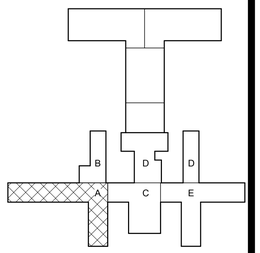

PROJECT NORTH

0 4' 8' 16'
SCALE: 1/8" = 1'-0"

REVISED DRAWING 09/24/2015

NEW YORK STATE OF OPPORTUNITY. Office of General Services

DESIGN & CONSTRUCTION

CONSULTANTS:

RBSD ARCHITECTS P.C. | STV 100 Years

A Joint Venture
225 Park Avenue South
New York, New York 10003

WARNING:
THE ALTERATION OF THIS MATERIAL IN ANY WAY, UNLESS DONE UNDER THE DIRECTION OF A COMPARABLE PROFESSIONAL, I.E. ARCHITECT FOR AN ARCHITECT, ENGINEER FOR AN ENGINEER OR LANDSCAPE ARCHITECT FOR A LANDSCAPE ARCHITECT, IS A VIOLATION OF THE NEW YORK STATE EDUCATION LAW AND/OR REGULATIONS AND IS A CLASS 'A' MISDEMEANOR.

STATE OF NEW YORK · FREDDY E. TAMAYO · LICENSED PROFESSIONAL ENGINEER · LIC. No. 071100

CONTRACT:
CONSTRUCTION

TITLE:
MAJOR BUILDING RENOVATIONS FOR THE MANHATTAN FORENSIC RELOCATION

LOCATION: MANHATTAN PSYCHIATRIC CENTER, BUILDING No. 102
600 EAST 125TH STREET WARDS ISLAND, NY 10035

CLIENT:
NYS OFFICE OF MENTAL HEALTH

MARK	DATE	DESCRIPTION
8	09/24/2015	ADDENDUM 8
	6-15-2015	BID DOCUMENT

PROJECT NUMBER:	44578
DESIGNED BY:	AN
DRAWN BY:	AN
FIELD CHECK:	NA
APPROVED:	FT

SHEET TITLE:
ELECTRICAL SECOND FLOOR LIGHTING PLAN, PART A

BUILDING NUMBER: 102

DRAWING NUMBER: E-202-2A

SHEET

9/21/2015 4:08:26 PM

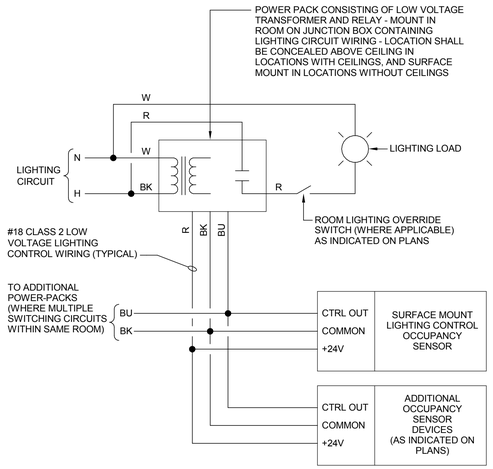

1 TYPICAL OCCUPANCY SENSOR WIRING DIAGRAM

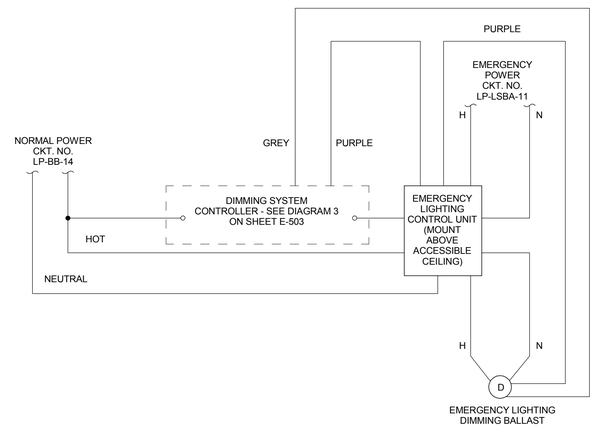

3 A/V STUDIO EMERGENCY LIGHTING DIAGRAM

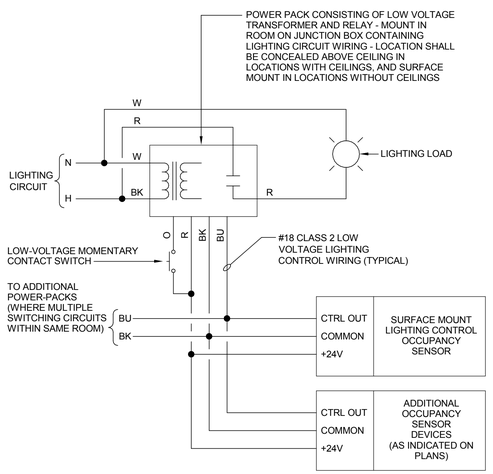

2 TYPICAL VACANCY SENSOR WIRING DIAGRAM

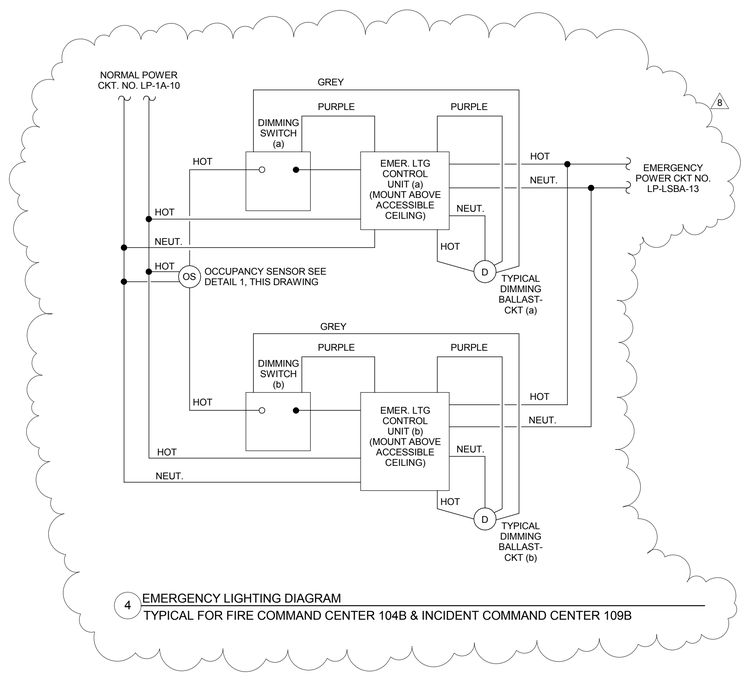

4 EMERGENCY LIGHTING DIAGRAM
TYPICAL FOR FIRE COMMAND CENTER 104B & INCIDENT COMMAND CENTER 109B

REVISED DRAWING 09/24/2015

9/21/2015 4:08:31 PM

NEW YORK STATE OF OPPORTUNITY. | Office of General Services

DESIGN & CONSTRUCTION

CONSULTANTS:

RBSD ARCHITECTS P.C. | STV 100 Years

A Joint Venture

225 Park Avenue South
New York, New York 10003

WARNING:
THE ALTERATION OF THIS MATERIAL IN ANY WAY, UNLESS DONE UNDER THE DIRECTION OF A COMPARABLE PROFESSIONAL, I.E. ARCHITECT FOR AN ARCHITECT, ENGINEER FOR AN ENGINEER OR LANDSCAPE ARCHITECT FOR A LANDSCAPE ARCHITECT, IS A VIOLATION OF THE NEW YORK STATE EDUCATION LAW AND/OR REGULATIONS AND IS A CLASS 'A' MISDEMEANOR.

STATE OF NEW YORK FREDDY E. TAMAYO LICENSED PROFESSIONAL ENGINEER No. 071100

CONTRACT:
CONSTRUCTION

TITLE:
MAJOR BUILDING RENOVATIONS FOR THE MANHATTAN FORENSIC RELOCATION

LOCATION: MANHATTAN PSYCHIATRIC CENTER, BUILDING No. 102
600 EAST 125TH STREET WARDS ISLAND, NY 10035

CLIENT:
NYS OFFICE OF MENTAL HEALTH

MARK	DATE	DESCRIPTION
8	09/24/2015	ADDENDUM 8
	6-15-2015	BID DOCUMENT

PROJECT NUMBER:	44578
DESIGNED BY:	AN
DRAWN BY:	AN
FIELD CHECK:	NA
APPROVED:	FT

SHEET TITLE:
ELECTRICAL DETAILS - LIGHTING

BUILDING NUMBER: 102

DRAWING NUMBER: E-505

SHEET

GENERAL NOTES:

1. FOR FIRE PROTECTION ABBREVIATIONS, SYMBOLS, NOTES & SCHEDULES, REFER TO DRAWING FP-001.
2. FOR FIRE PROTECTION DETAILS, REFER TO DRAWING FP-501-2.
3. EXISTING SPRINKLER SYSTEM (PARTIALLY SPRINKLERED) IN SUB-BASEMENT TO REMAIN

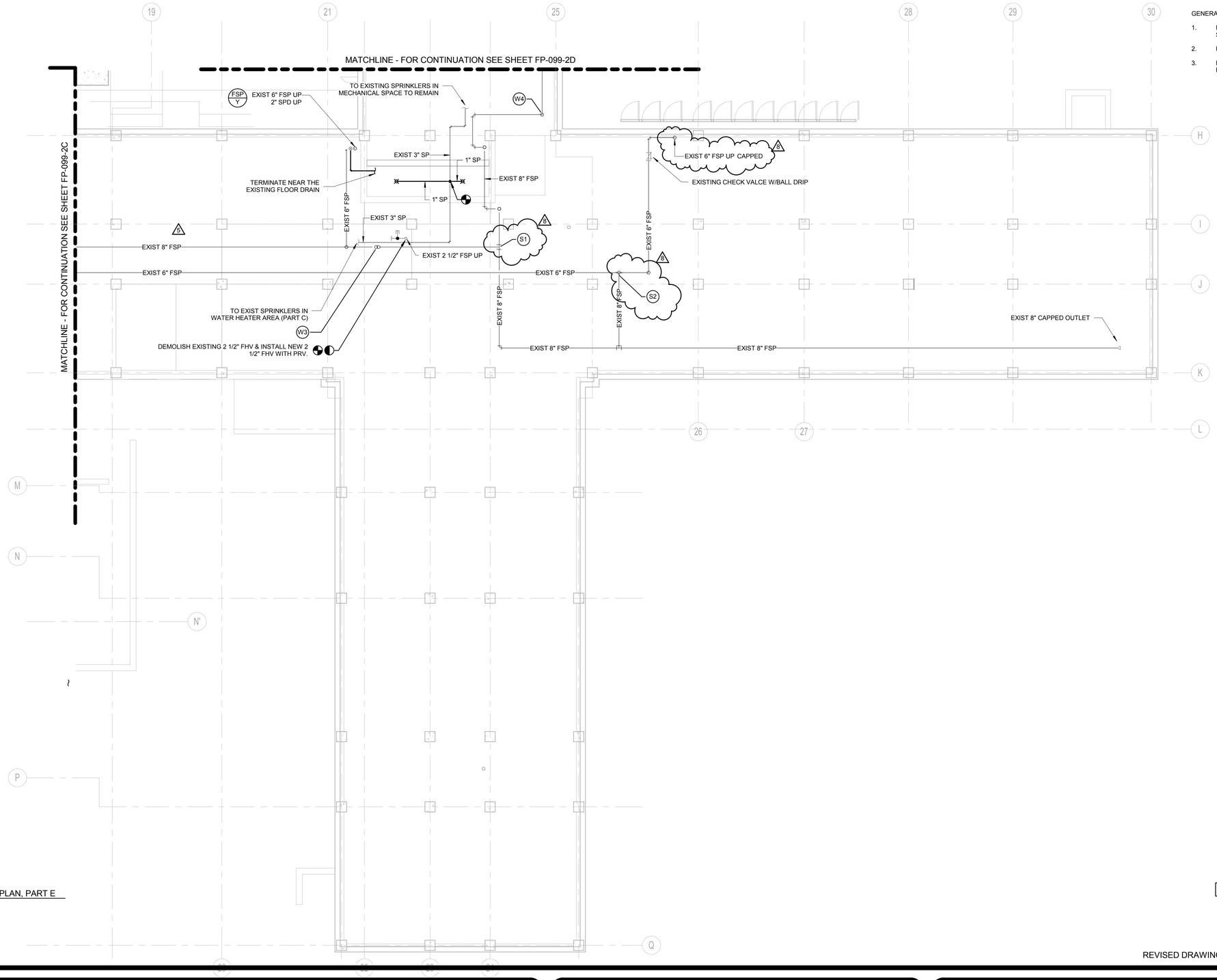

1 FIRE PROTECTION SUB-BASEMENT PLAN, PART E

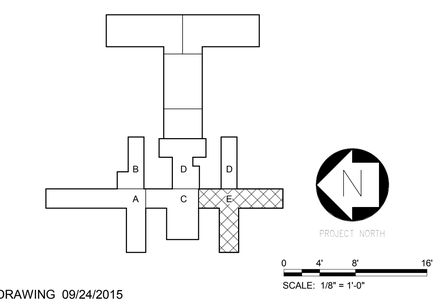

REVISED DRAWING 09/24/2015

NEW YORK STATE OF OPPORTUNITY. | Office of General Services

DESIGN & CONSTRUCTION

CONSULTANTS:

RBSD ARCHITECTS P.C. | STV 100 Years

A Joint Venture

225 Park Avenue South
New York, New York 10003

WARNING:
THE ALTERATION OF THIS MATERIAL IN ANY WAY, UNLESS DONE UNDER THE DIRECTION OF A COMPARABLE PROFESSIONAL, I.E. ARCHITECT FOR AN ARCHITECT, ENGINEER FOR AN ENGINEER OR LANDSCAPE ARCHITECT FOR A LANDSCAPE ARCHITECT, IS A VIOLATION OF THE NEW YORK STATE EDUCATION LAW AND/OR REGULATIONS AND IS A CLASS 'A' MISDEMEANOR.

CONTRACT: CONSTRUCTION

TITLE: MAJOR BUILDING RENOVATIONS FOR THE MANHATTAN FORENSIC RELOCATION

LOCATION: MANHATTAN PSYCHIATRIC CENTER, BUILDING No. 102
600 EAST 125TH STREET WARDS ISLAND, NY 10035

CLIENT: NYS OFFICE OF MENTAL HEALTH

MARK	DATE	DESCRIPTION
8	09/24/2015	ADDENDUM 8
5	8-12-2015	ADDENDUM 5
	6-15-2015	BID DOCUMENT

PROJECT NUMBER:	44578
DESIGNED BY:	TW
DRAWN BY:	JR
FIELD CHECK:	N/A
APPROVED:	JP

SHEET TITLE: FIRE PROTECTION SUB-BASEMENT PLAN, PART E

BUILDING NUMBER: 102

DRAWING NUMBER: FP-099-2E

SHEET

9/24/2015 4:11:27 PM

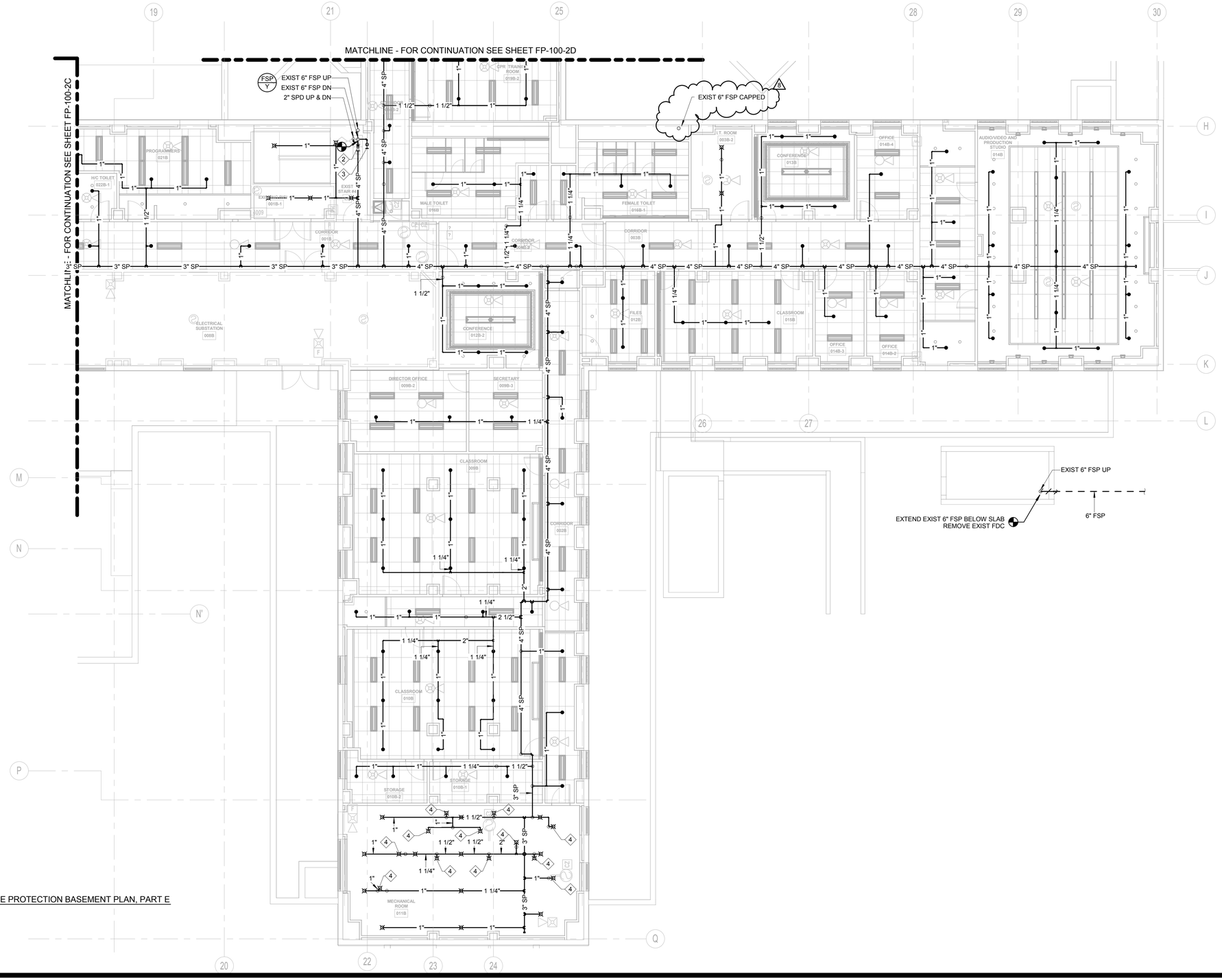

1 FIRE PROTECTION BASEMENT PLAN, PART E

GENERAL NOTES:

1. FOR FIRE PROTECTION ABBREVIATIONS, SYMBOLS, NOTES & SCHEDULES, REFER TO DRAWING FP-001.
2. FOR FIRE PROTECTION DETAILS, REFER TO DRAWING FP-501-2 & FP-502-2.

Keynote Legend	
Key Value	Keynote Text
2	FLOOR CONTROL VALVE ASSEMBLY W/FLOW SWITCH, PRESSURE REGULATOR, TAMPER SWITCH
3	2 1/2" FIRE HOSE VALVE, PRESSURE REGULATOR, CAP & CHAIN WITH SURFACE CABINET AND DRAIN VALVE.
4	SPRINKLER BELOW DUCT

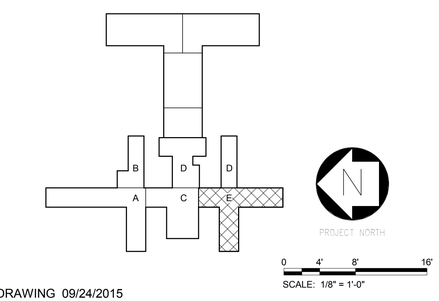

REVISED DRAWING 09/24/2015

NEW YORK STATE OF OPPORTUNITY. Office of General Services

DESIGN & CONSTRUCTION

CONSULTANTS:

RBSD ARCHITECTS P.C. | STV 100 Years

A Joint Venture
225 Park Avenue South
New York, New York 10003

WARNING:
THE ALTERATION OF THIS MATERIAL IN ANY WAY, UNLESS DONE UNDER THE DIRECTION OF A COMPARABLE PROFESSIONAL, I.E. ARCHITECT FOR AN ARCHITECT, ENGINEER FOR AN ENGINEER OR LANDSCAPE ARCHITECT FOR A LANDSCAPE ARCHITECT, IS A VIOLATION OF THE NEW YORK STATE EDUCATION LAW AND/OR REGULATIONS AND IS A CLASS "A" MISDEMEANOR.

CONTRACT: CONSTRUCTION

TITLE: MAJOR BUILDING RENOVATIONS FOR THE MANHATTAN FORENSIC RELOCATION

LOCATION: MANHATTAN PSYCHIATRIC CENTER, BUILDING No. 102
600 EAST 125TH STREET WARDS ISLAND, NY 10035

CLIENT: NYS OFFICE OF MENTAL HEALTH

MARK	DATE	DESCRIPTION
8	09/24/2015	ADDENDUM 8
	6-15-2015	BID DOCUMENT

PROJECT NUMBER:	44578
DESIGNED BY:	TW
DRAWN BY:	JR
FIELD CHECK:	N/A
APPROVED:	JP

SHEET TITLE: FIRE PROTECTION BASEMENT PLAN, PART E

BUILDING NUMBER: 102

DRAWING NUMBER: FP-100-2E

SHEET

9/24/2015 4:11:27 PM

GENERAL NOTES:

1. FOR FIRE PROTECTION ABBREVIATIONS, SYMBOLS, NOTES & SCHEDULES, REFER TO DRAWING FP-001.
2. FOR FIRE PROTECTION DETAILS, REFER TO DRAWING FP-501-2 & FP-502-2.

Keynote Legend	
Key Value	Keynote Text
2	FLOOR CONTROL VALVE ASSEMBLY W/FLOW SWITCH, PRESSURE REGULATOR, TAMPER SWITCH
3	2 1/2" FIRE HOSE VALVE, PRESSURE REGULATOR, CAP & CHAIN WITH SURFACE CABINET AND DRAIN VALVE.
10	REMOVE EXISTING ANGLE VALVE AND 6" FSP RISER UPON INSTALLATION OF NEW FSP 6

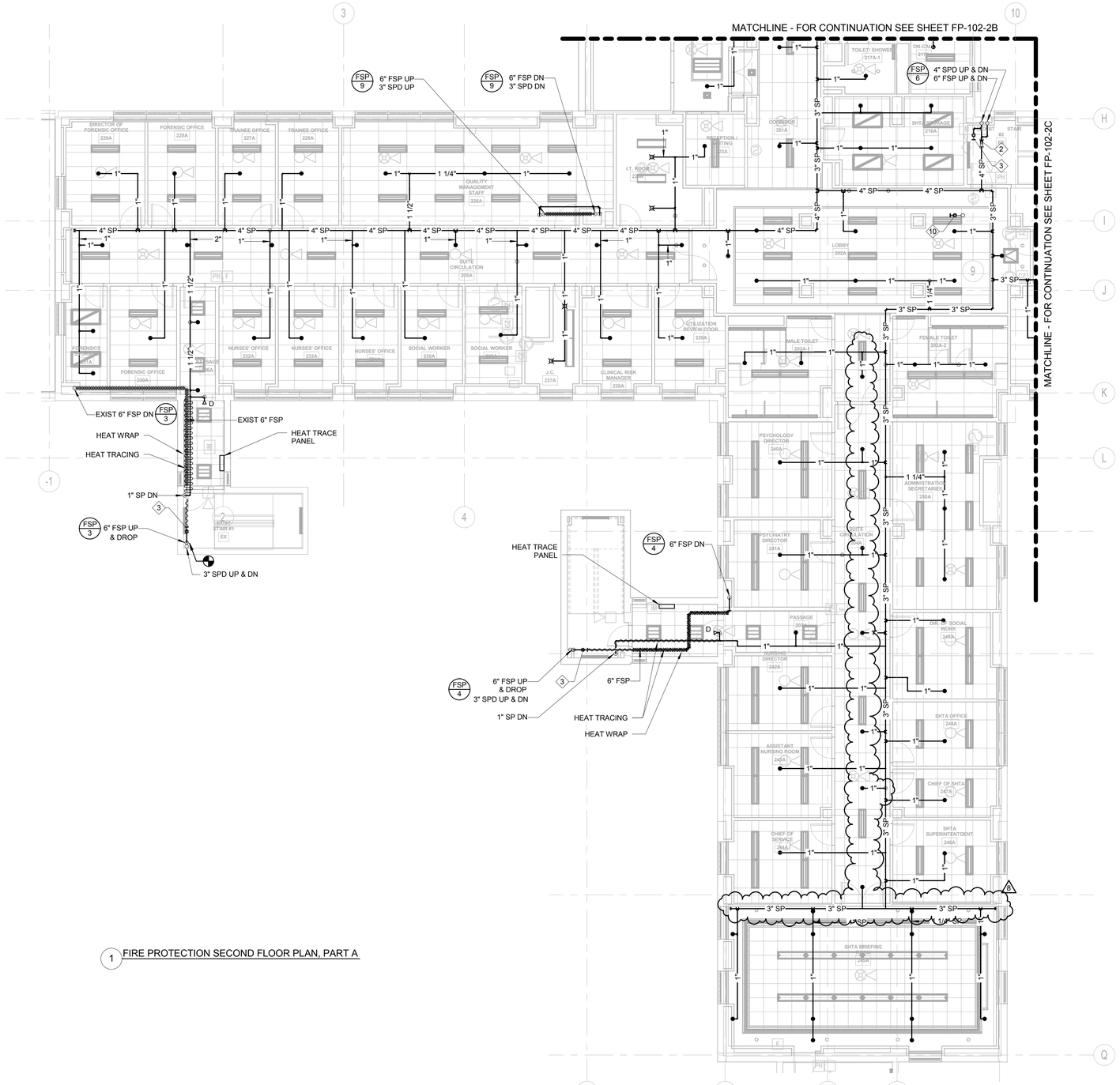

1 FIRE PROTECTION SECOND FLOOR PLAN, PART A

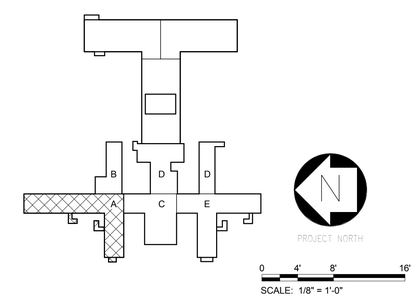

REVISED DRAWING 09/24/2015

NEW YORK STATE OF OPPORTUNITY. Office of General Services

DESIGN & CONSTRUCTION

CONSULTANTS:

RBSD ARCHITECTS P.C. | STV 100 Years

A Joint Venture

225 Park Avenue South
New York, New York 10003

WARNING:
THE ALTERATION OF THIS MATERIAL IN ANY WAY, UNLESS DONE UNDER THE DIRECTION OF A COMPARABLE PROFESSIONAL, I.E. ARCHITECT FOR AN ARCHITECT, ENGINEER FOR AN ENGINEER OR LANDSCAPE ARCHITECT FOR A LANDSCAPE ARCHITECT, IS A VIOLATION OF THE NEW YORK STATE EDUCATION LAW AND/OR REGULATIONS AND IS A CLASS 'A' MISDEMEANOR.

CONTRACT: CONSTRUCTION

TITLE: MAJOR BUILDING RENOVATIONS FOR THE MANHATTAN FORENSIC RELOCATION

LOCATION: MANHATTAN PSYCHIATRIC CENTER, BUILDING No. 102
600 EAST 125TH STREET WARDS ISLAND, NY 10035

CLIENT: NYS OFFICE OF MENTAL HEALTH

MARK	DATE	DESCRIPTION
8	09/24/2015	ADDENDUM 8
	6-15-2015	BID DOCUMENT

PROJECT NUMBER:	44578
DESIGNED BY:	TW
DRAWN BY:	JR
FIELD CHECK:	N/A
APPROVED:	JP

SHEET TITLE:

FIRE PROTECTION SECOND FLOOR PLAN, PART A

BUILDING NUMBER: 102

DRAWING NUMBER: FP-102-2A

SHEET

9/22/2015 4:35:30 PM

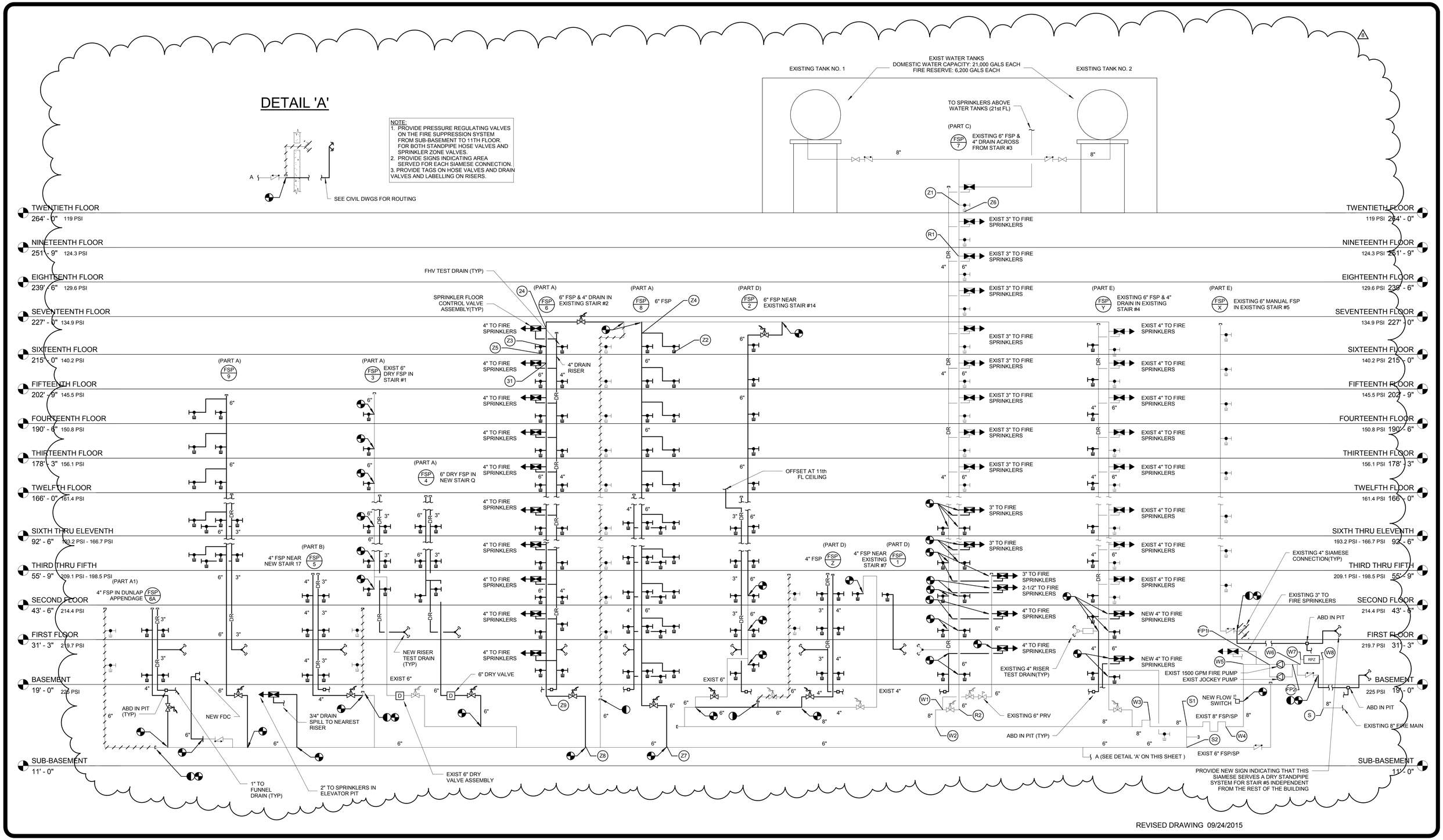

NEW YORK STATE OF OPPORTUNITY. Office of General Services

DESIGN & CONSTRUCTION

CONSULTANTS:

RBSD ARCHITECTS P.C. | STV 100 Years

A Joint Venture

225 Park Avenue South
New York, New York 10003

WARNING:
THE ALTERATION OF THIS MATERIAL IN ANY WAY, UNLESS DONE UNDER THE DIRECTION OF A COMPARABLE PROFESSIONAL, I.E. ARCHITECT FOR AN ARCHITECT, ENGINEER FOR AN ENGINEER OR LANDSCAPE ARCHITECT FOR A LANDSCAPE ARCHITECT, IS A VIOLATION OF THE NEW YORK STATE EDUCATION LAW AND/OR REGULATIONS AND IS A CLASS 'A' MISDEMEANOR.

CONTRACT: CONSTRUCTION

TITLE: MAJOR BUILDING RENOVATIONS FOR THE MANHATTAN FORENSIC RELOCATION

LOCATION: MANHATTAN PSYCHIATRIC CENTER, BUILDING No. 102
600 EAST 125TH STREET WARDS ISLAND, NY 10035

CLIENT: NYS OFFICE OF MENTAL HEALTH

MARK	DATE	DESCRIPTION
8	09/24/2015	ADDENDUM 8
	6-15-2015	BID DOCUMENT

PROJECT NUMBER:	44578
DESIGNED BY:	TW
DRAWN BY:	JR
FIELD CHECK:	N/A
APPROVED:	JP

SHEET TITLE: FIRE PROTECTION RISER DIAGRAM

BUILDING NUMBER: 102

DRAWING NUMBER: FP-601-2

SHEET

9/24/2015 4:11:27 PM

A8

Building 102 — OCCUPANT LOAD AND EXIT WIDTH (BC 1003 AND BC 1004) & NFPA 101-2000

Level / Bldg / Side	USE GROUP OR SPACE DESCRIPTION	(A) AREA SQ. FT.	Occupancy	(B) AREA PER OCCUPANT (TABLE (1004.1.1)		(C) OCCUPANT LOAD (A+B)	(D) EGRESS WIDTH PER OCCUPANT (SECTION 1005.1) STAIR	OTHER	REQUIRED WIDTH (SECTION 1005.1) STAIR	LEVEL	EXIT WIDTH (IN) ACTUAL WIDTH SHOWN ON PLANS: EXIST STAIR	Exterior.STAIR	LEVEL	LEVEL
Basement Level														
Side A Compartment A A-NORTH	MIS Suite	6,662												
	Patient Storage	1,718		300		6								
	MIS Storage	3,816		300		13								
	MIS Maintenance	598		300		2								
	Training Classroom	530		20		27								
				Total Load Compartment A-NORTH / Available Compartment Capacity		47 / 317	0.3	0.2	44"	32"		1 @ 44" / 147	1 @34" / 170	
B-A-CENTER	Medical Records Suite	11,426	B	100	Total	114								
	Mechanical	850	Mech	300	Total	3								
		3,764												
	Mail Room Suite	1,276	B	100	Total	13								
	Cart Holding	336		100	Total	3								
	Mechanical	599	Mech	300	Total	2								
				Total Load Compartment A-Center / Available Compartment Capacity		135 / 483	0.3	0.2	44"	32"	1@ 44" / 147	1 @ 44" / 147	1 @38" / 190	
B-C-CENTER		2,190												
	IT Technicions	492	B	100	Total	5								
	Electrical Substation	599	Mech	300	Total	2								
Compartment "C"-CENTER	Pharmacy Suite	4,804	B	100	Total	48								
	IT Technitions	443	B	100	Total	4								
	Security Lockers	1866	Locker	50	Total	37								
	Existing telephone room	1,621	Mech	300	Total	5								
				Total SIDE "C" BASEMENT / Available Compartment Capacity		102 / 1157	0.3	0.2	44"	32"	3@44" / 440	1@44" / 147	2 @38" / 380	1HE @38 / 190
Side "B" Compartment B-B-SOUTH	Medical Library Suite	998		240		4								
	Medical Library	519		50		10								
	Book Storage	338		100		3								
					Total	14								
	CPR Training	387		20	Total	19								
	Unassigned	1,118		100	Total	11								
	Training Suite S	2,391												
	Audio Visual Production	1,161		15		77								
	Class Room	358		20		18								
	Conference	230		100		2								
3	Offices	120		100		4								
					Total	101								
	Training Suite E	2,567		120		21								
	Class Room	706		20		35								
	Class Room	662		20		33								
2	Offices	400		100		4								
	Conf	259		100		3								
					Total	96								
	Mechanical	804		300	Total	3								
				Total Load Compartment B-S / Available Compartment Capacity		245 / 757	0.3	0.2	44"	32"		4@44" / 587	1 @34" / 170	
Compartment B-B-North		2,617												
	MIS Director	132		100		1								
	Programers	364		100		4								
	Electrical Substation	1,043		300		3								
				Total Load Compartment B-N / Available B-N Compartment Capacity		8 / 527	0.3	0.2	44"	32"	1@44" / 147			2@38" / 380
				Grand total B Basement / Available Capacity		537 / 3240	0.3	0.2	44"	32"	2@44" / 293	5@44" / 733	4@38 / 760	7 @34" / 1190
				Grand total Basement Load / Basement EXIT Stairs & Horiz Exit Capacity		639 / 1950	0.3	0.2	44"	32"	5@44" / 733	7@44" / 1027		1HE @38" / 190

Building 102 — OCCUPANT LOAD AND EXIT WIDTH (BC 1003 AND BC 1004) & NFPA 101-2000

Level / Bldg / Side	USE GROUP OR SPACE DESCRIPTION	(A) AREA SQ. FT.	Occupancy	(B) AREA PER OCCUPANT (TABLE (1004.1.1)		(C) OCCUPANT LOAD (A+B)	(D) EGRESS WIDTH PER OCCUPANT (SECTION 1005.1) STAIR	OTHER	REQUIRED WIDTH (SECTION 1005.1) STAIR	LEVEL	EXIT WIDTH (IN) ACTUAL WIDTH SHOWN ON PLANS: EXIST STAIR	Exterior.STAIR	LEVEL	LEVEL
1st Floor														
Compartment 1-A-North	Admissions Suite 1-A-North													
	Admissions	2,907	I-2	240	Total	12								
				Total Load Compartment A-N-1 / Available Capacity		12 / 340	0.3	0.2	44"	32"				2 @34" / 340
Compartment 1-A-Center	Compartment 1-A-Center													
	Shell Future Dental Suite	1,265	I-2	240	Total	5								
	Patient Clinic	1482	I-2	240	Tptal	6								
	Visitors Suite	4,148												
	Visitors Room	3,962	Assembly	15	Total	264								
				Total Load Compartment 1-A-C / Available Capacity		276 / 823	0.3	0.2	44"	32"		1@44 / 293	1@38" / 190	2 @34" / 340
Compartment 1- A- East	Compartment 1-A- EAST	3,973												
	Shell Future Medical Suite	3,375	I-2	240	Total	14								
				Total Load Compartment 1-A-E / Available Capacity		14 / 463	0.3	0.2	44"	32"		1@44 / 293		1 @34" / 170
Compartment 1-Center 1- A- South	Compartment 1C Center													
	Security offices	2,012												
	Security and MIS	3,375	I-2	240	Total	14								
4	Security offices	1,183	Office	100		12								
	MIS	113	Office	100		1								
	MIS	273	Office	100		3								
					Total	15								
	Legal Services Suite													
	Court Room	765	Court	40		19								
	Law Offices	1,183	Office	100		12								
					Total	31								
	Lounge	682		100	Total	7								
	Vestibule	2,043	Concorse	100	Total	20								
	Lobby	3,856		20	Total	193								
				Total Load Compartment 1-C / Available Capacity		280 / 1260	0.3	0.2	44"	32"		3@44" / 440	2@48 / 480	2@34" / 340
Side B Compartment Compartment 1-B-North	COMPARTMENT 1-B -North													
	Security offices	872	Business	100	Total	9								
	Storage	80		300	Total	1								
	Telephone operator	149	elephone Operator	100	Total	1								
				Total Load Compartment B-North / Available Capacity		11 / 530	0.3	0.2	44"	32"			1 @38" / 190	1@34" / 340
Compartment 1--B-South	COMPARTMENT 1-B-SOUTH													
	Human Resources Suite	3,556	Business	100	Total	36								
	Buisness Cashier Suite	4,013	Business	100	Total	40								
	Buisness Office Suite	4,013	Business	100	Total	40								
	Mechanical	826	Mechanical	300	Total	3								
				Total Load Compartment 1- B-S / Available Capacity		119 / 993	0.3	0.2	44"	32"		2@ 44' / 293	1 @38" / 190	3@34" / 510
				Grand total First Floor / 1st Floor A&C EXIT Stairs & Ramps Capacity		711 / 2843	0.3	0.2	44"	32"		8@44" / 1173	2@48 / 480	7@34" / 1190

Building 102 — OCCUPANT LOAD AND EXIT WIDTH (BC 1003 AND BC 1004) & NFPA 101-2000

Level / Bldg / Side	USE GROUP OR SPACE DESCRIPTION	(A) AREA SQ. FT.	Occupancy	(B) AREA PER OCCUPANT (TABLE (1004.1.1)		(C) OCCUPANT LOAD (A+B)	(D) EGRESS WIDTH PER OCCUPANT (SECTION 1005.1) STAIR	OTHER	REQUIRED WIDTH (SECTION 1005.1) STAIR	LEVEL	EXIT WIDTH (IN) ACTUAL WIDTH SHOWN ON PLANS: EXIST STAIR	Exterior.STAIR	LEVEL	LEVEL
Second Floor														
Compartment A N 2-A-North	Administration	13,818	Business	100										
	North Admin Suite	3,220	Business	100	Total	32								
	West Admin Suite													
	Offices	1,745	Business	100		17								
	SHTA Conference	745	Conf	15		50								
					Total	67								
	East Suite	2,006												
	Lockers	1,781	Business	100		18								
	Conference	548	conf	15		37								
					Total	54								
	On Call	165	I-2 Sleep	120	Total	1								
	SHTA Storage	225	storage	300	Total	1								
				Total Load Compartment A-N / Available Capacity		156 / 903	0.3	0.2	44"	32"	2 @ 44" / 293	3@ 44" / 440	1 @34" / 170	
Compartment 2 C -	South Suite	1,278												
	Exec Offices	1,278	Business	100	Total	13								
2-B	Existing- Used only for Dead End			Na										
2-C Center	Existing Cafeteria	2,147	Merrcantile	60		36								
	Serving	2,023	Kitchen	200		10								
		4,170			Total	46								
	Nurse Sign In Suite	3852	Business	100	Total	39								
	Staff Clinic / Infection Contro	1,080	Business	100	Total	11								
	Lounge	442		100	Total	4								
	Reception	296		100	Total	3								
				Total Second Floor "C" / Available Capacity		115 / 630	0.3	0.2	44"	32"	2@ 44" / 293	1@ 44" / 147	1 @38" / 190	
			Total 2nd Floor A&C Occupancy load / Total Avail Compartmnt Capacity			271 / 1533					4@ 44" / 587	4@44" / 587	2 @38" / 360	
			2nd Floor A&C EXIT Stair Capacity			587					587	587		

Building 102 — OCCUPANT LOAD AND EXIT WIDTH (BC 1003 AND BC 1004) & NFPA 101-2000

Level / Bldg / Side	USE GROUP OR SPACE DESCRIPTION	(A) AREA SQ. FT.	Occupancy	(B) AREA PER OCCUPANT (TABLE (1004.1.1)		(C) OCCUPANT LOAD (A+B)	(D) EGRESS WIDTH PER OCCUPANT (SECTION 1005.1) STAIR	OTHER	REQUIRED WIDTH (SECTION 1005.1) STAIR	LEVEL	EXIT WIDTH (IN) ACTUAL WIDTH SHOWN ON PLANS: EXIST STAIR	Exterior.STAIR	LEVEL	LEVEL
Floors 3 thru 11	25 Bed INPATIENT SLEEPIN UNITS													
Compartment A Nortl A N	Inpatient	2,917	I-2	120		24								
3 to 11-A-North				Total Load Compartment A-N / Available Capacity		24 / 337	0.3	0.2	44"	32"	1 @ 44" / 147		1HZ @38" / 190	
Compartment A S	Inpatient	9,059	I-2	120		75								
3 to 11-A-South				Total Load Compartment A-N / Available Capacity		100 / 673	0.3	0.2	44"	34"	2@ 44" / 293		2HZ @38" / 380	
				STAIR 3 Is Available							147			
				3rd thru 11 th Floor A&C EXIT Stair Capacity		587					587	0		
Floors 12	VOCATIONAL MALL	9,047												
Compartment 12-A-North		9,047	I-2											
	Arts and Crafts	357		50		7								
	Classroom	299		20		15								
	Computer Lab	599		50		12								
	Seclosion	304		240		1								
	Staff Lounge	222		100		2								
	Treatment Room	141		120		1								
	Storage	70		300		1								
	Office & Interview rooms(5)	503		100		5								
				Total Load Compartment A-N / Available Capacity		38 / 527	0.3	0.2	44"	34"	1 @ 44" / 147		2HZ @38" / 380	
Compartment 12-A-South	Frame shop	518		50		10								
	Rec Room/ Conf	693		15		46								
	Mechanical Room	489		300		2								
	Classroom	357		20		18								
	Classroom	259		20		13								
	Student Lounge	200		100		2								
	Observation	99		100		1								
	Classroom	312		20		16								
	Office	82		100		1								
				Total Load Compartment B / Available Capacity		52 / 507	0.3	0.2	44"	34"	1 @ 44" / 147		1HZ @38" / 190	1HZ @34" / 170
				Total 13th Occupancy load / Total Avail Compartmnt Capacity		89 / 1033	0.3	0.2	44"	32"	2 @ 44" / 293		2HZ @38" / 570	1HZ @34" / 170
				STAIR 3 is Available							147			
				12 th A&C Floor EXIT Stair Capacity		440					440			
Floors 13	THERAPY MALL													
Compartment A North 13-A-North		9,047	I-2											
	Group Therapy	357		15		24								
	Group Therapy	321		15		21								
	Group Therapy	314		15		21								
	Group Therapy	320		15		21								
	Group Therapy	285		15		19								
	Storage(2)	177		300		1								
	Lounge	141		100		1								
				Total Load Compartment A-N / Available Capacity		108 / 337	0.3	0.2	44"	34"	1 @ 44" / 147		1HZ @38" / 190	
Compartment 13-A-South	Seclosion	269		120		2								
	Group Therapy	366		15		24								
	Group Therapy	258		15		17								
	Rec Room/ Conf	706		15		47								
	Mechanical Room	300		300		1								
	Large Group Therapy	546		15		36								
	Observation	106		100		1								
	Treatment Room	134		120		1								
	Office & Interview rooms	614		100		6								
	Storage(1)	49		300		1								
				Total Load Compartment A-S / Available Capacity		138 / 507	0.3	0.2	44"	34"	1 @ 44" / 147		1HZ @38" / 190	1HZ @34" / 170
				Total 13th Occupancy load / Total Avail Compartmnt Capacity		246 / 844					2@44" / 294		2@38" / 380	1HZ @34" / 170
				STAIR 3 is Available							147			
				13 th A&C Floor EXIT Stair Capacity		441					441			

Floors 14	Physical MALL	Area	Occupancy	Area per occupant		Load	Stair	Other	Req. Stair	Req. Level	Exist Stair	Exterior Stair	Level	Level
Compartment 14-A-North	Gymnasium	9,047 / 2,369	I-2	50		47								
				Total Load Gymnasium A / Available Compartment Capacity		47 / 337	0.3	0.2	44"	34"	1 @ 44" / 147		1HZ @38" / 190	
Compartment 14-A-South	Vidio Room	235		50		5								
	Commisary	234		50		5								
	Weight Room Fixed	477		50		10								
	Recreation Room	326		15		22								
	Recreation Room	290		15		19								
	Large Exercise Yoga Room	797		15		53								
	Barber/Beauty Shop	308		20		15								
	Seclosion	239		120		2								
	Intern	72		100		1								
	Observation	144		100		1								
	Offices	63		100		1								
				Total Mall Load Compartment A / Available Compartment Capacity		133 / 507	0.3	0.2	44"	34"	1 @ 44" / 147		1HZ @38" / 190	1@34" / 170
				Total Physical Mall / Total Available Mall Compartment Exit Capacity		181 / 843	0.3	0.2	44"	34"	2@ 44" / 293		2HZ @38" / 380	1@34" / 170
				STAIR 3 Is Available							147			
				14th A&C Floor EXIT Stair Capacity		440					440			

DESIGN CODE CONSIDERATIONS

THE PROJECT SHALL COMPLY WITH NYS EXISTING BUILDING CODE 2010 WITH ALTERATION WHERE THE WORK AREA IS LESS THAN 50% OF THE AGGREGATE AREA OF THE BUILDING – LEVEL 2 AND NFPA 101:

- **OCCUPANCY GROUP: BUILDING 102** NFPA 101 -2000
  - PRIMARY BUILDING OCCUPANCY I-2 NY STATE 308.3 & NFPA CHAPTER 18
  - BUSINESS OCCUPANCY :THE ENTIRE BASEMENT, AND 2ND FLOOR AND THE SOUTH END OF THE FIRST FLOOR NY STATE 304.1 NFPA CHAPTER 38
  - THEY ARE AND SEPARATED FROM I-2 BY 2 HR SEPARATIONS
- **CONSTRUCTION CHARACTERISTICS:** THE EXISTING BUILDING 102;
  - THE BUILDING IS 21 STORIES ABOVE THE LEVEL OF DISCHARGE (1ST FLOOR) INCLUDING THE PENTHOUSE AND ELEVATOR MACHINE ROOM WITH A HEIGHT OF 257'-3". THERE IS A BASEMENT 12'-3" BELOW WITH A MECHANICAL SUB BASEMENT WHICH IS PRIMARILY CRAWL SPACE OF VARYING HEIGHTS.
  - THE BUILDING HAS A TOTAL GROSS AREA OF 528,629 SF
  - THE GROSS AREA OF RENOVATION INCLUDING ALL SHELLED SPACE IS **244,349 SF** OR 46.23%
  - THE BUILDING IS FULLY SPRINKLED ON THE SOUTH SIDE (SOUTH OF COL LINE 14 AS A RESULT OF A MAJOR PROJECT COMPLETED IN THE EARLY 2000.
- **CONSTRUCTION CHARACTERISTICS:** THE EXISTING BUILDING 106
  - **BUILDING 106:** THIS EXISTING BUILDING HAS BEEN REMOVED FROM THE PROJECT. IT IS A 3 STORY WITH PENTHOUSE 75,095 SQ. FT. BUILDING. IT PARTIALLY SPRINKLED AND HAS CONCRETE ENCASED STEEL FRAME STRUCTURE WITH INSUFFICIENT CONCRETE COVER TO MEET CURRENT STANDARDS. THERE IS A SMALL 1,500 SQ FT (LESS THAN 2%) RENOVATION TO ADD A SECURITY SALLY PORT.
    THIS QUALIFIES A LEVEL 2 ALTERATION UNDER CHAPTER 7 OF THE NYS EXISTING BUILDING CODE. THE SECURITY SALLY PORT WILL BE BUILT TO THE STANDARDS OF THE REMAINDER OF THE ADJACENT 102 PROJECT. THE REMAINING BUILDING WILL NOT BE UPGRADED AT THIS TIME.
- **CONSTRUCTION TYPES** BOTH BUILDINGS ARE EXISTING STRUCTURES WHICH ARE CURRENTLY NON COMPLIANT WITH CURRENT CODES FOR I-2 OCCUPANCIES.
  - **BUILDING 102** –THIS BUILDING WILL BE MADE TO BE TYPE 1A NYS BUILDING CODE. NY STATE BUILDING CODE 2010 CHAPTER 5 - GENERAL HEIGHTS AND AREAS -TABLE 503 ALLOWS ONLY TYPE 1-A FOR I-2 BUILDINGS THAT EXCEED 4 STORIES. THIS IS EQUIVALENT TO NFPA 332 IN NFPA 2000 -NFPA 220 & TABLE 18 & 19.1.6.2
  - **BUILDING 106 (ADJACENT & CONNECTED AT THE BASEMENT LEVEL):** 106 IS NOT CURRENTLY CODE COMPLIANT FOR I-2 OCCUPANCIES DUE TO SOME FIREPROOFING ISSUES AND LACK OF SPRINKLERS IN SOME AREAS. THIS BUILDING IS CONNECTED TO 102 AT THE BASEMENT LEVEL BY TWO REINFORCED CONCRETE TUNNELS 59 FT LONG AND THE TWO STRUCTURES ARE SEPARATED FROM BY EXPANSION JOINTS ON BOTH SIDES. THIS BUILDING HAS BEEN USED FOR SUPPORT SERVICES INCLUDING FOOD SERVICE SHIPPING AND RECEIVING AND STORAGE AND WILL CONTINUE TO BE USED AS SUCH. THIS PROJECT WILL PROVIDE A 3HR. SEPARATION USING 3HR "A" LABEL DOORS WITH MAGNETIC HOLDERS ON THE MAIN CORRIDOR DOORS THAT CONNECT 102 TO 106.
  - **BUILDINGS 105 & 103 (ADJACENT)**: THESE BUILDINGS ARE BOTH NON CONFORMING BUILDINGS FOR I-2 USE BY CURRENT CODE DUE TO FIRE PROOFING ISSUES BUILDINGS AND THAT THEY ARE NOT FULLY SPRINKLED. THESE BUILDINGS ARE SEPARATED FROM 102 BY A 55 FT BASEMENT TUNNEL TO KIRBY AND A 75 FT TUNNEL TO MEYER. THESE TWO TUNNELS WILL BE ABANDONED AS PART OF THIS PROJECT AND 3 HR SEPARATION WALLS BUILT AT THE OPENINGS.

TRAVEL DISTANCE NFPA (18.2.6) IN ACCORDANCE WITH 7.6 FOR I-2 HEALTH CARE

	NFPA 101 2000 2000		BUILDING CODE OF NY STATE 2010	
MAXIMUM TRAVEL DISTANCE FROM ANY PORTION IN A ROOM	18.2.6.2.	(SPRINKLED)	1016	(SPRINKLED)
MAXIMUM TRAVEL DISTANCE TO AN EXIT				
FROM ANY POINT TO AN EXIT I-2 HOSPITAL	8.2.6.2.1	200 FT	1016.1	200 FT
B BUSINESS	**38.2.6**	300 FT	1016.1	300 FT
SUITES NFPA 101 18.2.5				
SLEEPING SUITES				
MAXIMUM SIZE SLEEPING SUITES WITH ONE EXIT	8.2.5.2	1,000 SF	1014.2.2	1,000 SF
MAX SIZE SLEEPING SUITES	18.2.5.6	5,000 SF	1014.2.2	5,000 SF
MAX TRAVEL DISTANCE WITHIN A SUITE WITH ONE INTERVENING ROOM TO THE EXIT ACCESS DOOR	18.2.6.2.4	100 FT	1014.2.2 EX 4	100 FT
MAX TRAVEL DISTANCE FROM ANY POINT IN A NON SLEEPING SUITE TO AN EXIT ACCESS DOOR	18.2.6.2.3	50 FT	1014.2.2 EX 5	50 FT
NON SLEEPING SUITES 18.2.5.3				
MAXIMUM SIZE NON SLEEPING SUITE WITH ONE EXIT SQ. FT	**18.2.5.3**	2,5000	1014.2.2	2,5000
MAXIMUM SIZE NON SLEEPING SUITE	**18.2.5.7**	10,000 SQ FT	1014.2.2	10,000 SQ FT
MAX TRAVEL DISTANCE FROM ANY POINT IN NON SLEEPING SUITE TO AN EXIT ACCESS DOOR WITH ONE INTERVENING ROOM.	18.2.5.8	100 FT	1014.2.2	100 FT
MAX TRAVEL DISTANCE FROM ANY POINT IN A ROOM SUITE TO AN EXIT ACCESS DOOR IN THE ROOM.	18.2.5.8	50 FT	1014.2.2	50 FT
DEAD END				
I-2 HOSPITAL	**18.2.5.10**	**30 FT**	705.6	35
B BUSINESS	38.2.5.2	50 FT	1017.3 EX 2	50
SUBDIVISION OF BUILDING SPACES	18.3.7			
BUILDINGS CONTAINING HEALTH CARE FACILITIES SHALL BE DIVIDED INTO NOT LESS THAN 2 COMPARTMENTS	18.3.7	2 MIN / FLOOR		
MAXIMUM SIZE	18.3.7	22,500 SQ FT		
MAXIMUM DISTANCE FROM ANY POINT TO A SMOKE BARRIRER	18.3.7	200 FT		
DIVIDE EVERY STORY WITH 50 + OCCUPANTS (REGARDLESS OF USE):		2 COMP. /FL		

- **DISCHARGE FROM EXITS AT LEVEL OF DISCHARGE NFPA 101 7.7.2**
- NOT MORE THAN 50% OF REQUIRED NO. OF EXITS OR CAPACITY ARE PERMITTED TO EXIT THROUGH AREAS ON THE LEVEL OF EXIT DISCHARGE.

- **HORIZONTAL EXITS NFPA 101 18.2.2.5**
- THE TOTAL EGRESS CAPACITY OF OTHER EXITS (STAIRS, RAMPS, DOORS LEADING TO THE OUTSIDE SHALL NOT BE REDUCED BELOW ONE-THIRD OF THAT REQUIRED FOR THE ENTIRE AREA OF THE BUILDING.

EGRESS CAPACITY CRITERIA

OCCUPANT LOAD FACTORS: NFPA 7.3 & NY STATE BUILDING CODE 1010

USE	NFPA 101 2000 TABLE 7.31.2 SQ. FT / PERSON	STATE BUILDING CODE 2010 TABLE 1004.1.1 SQ. FT. / PERSON
BUILDING 102		
HEALTH CARE – PRIMARY		
INPATIENT TREATMENT	240	240
INPATIENT SLEEPING	120	120
OUTPATIENT AREAS		100
OTHER USES		
BUSINESS	100	100
ASSEMBLY (TABLES & CHAIRS	15	15
COURT ROOMS		40 NET
MEDICAL LIBRARY READING	50 NET	50
LIBRARY STACK	100	100 GROSS
CLASS ROOM TABLES & CHAIRS	20 NET 50 NET	20 NET 50 NET
SHOPS LABS & VOCATIONAL	50	
EXERCISE ROOM (FIXED EQUIP)	15	50 GROSS
EXERCISE ROOM (W/O EQUIP)		
ACCESSORY STORAGE MECH. EQUIP	300	300 GROSS
LOCKER ROOMS	NA	50 GROSS

EGRESS CAPACITY FACTORS (18.2.6) IN ACCORDANCE WITH 7.6 FOR I-2 HEALTH CARE

	NFPA 101 2000 2000		BUILDING CODE OF NY STATE 2010	
I-2 HOSPITAL				
STAIRWAY (WIDTH - INCH PER PERSON) I-2	7.3.3.1	0.3	1005.1	0.3
LEVEL COMPONENTS & RAMPS (WIDTH - INCH PER PERSON) I-2	7.3.3.1	0.2	1005.1	0.2
ALL OTHERS (BUSINESS)	7.3.3.1	0.2	1005.1	0.15

CMS CATEGORICAL LSC WAVERS PERMITTED:
DATED AUGUST 30,2013
WAVER NO. 5: SUITES
THIS IS APPLICABLE TO PORTIONS OF THIS PROJECT

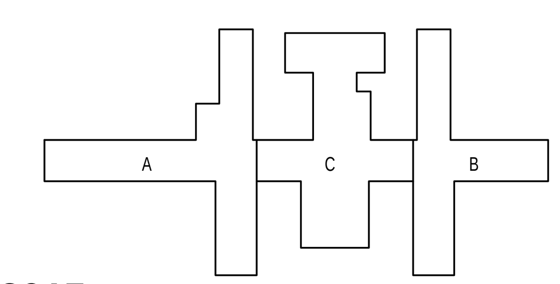

REVISED DRAWING 09/24/2015

9/22/2015 5:53:37 PM

NEW YORK STATE OF OPPORTUNITY. | Office of General Services
DESIGN & CONSTRUCTION

CONSULTANTS:
RBSD ARCHITECTS P.C. | STV 100 Years
A Joint Venture
225 Park Avenue South
New York, New York 10003

WARNING:
THE ALTERATION OF THIS MATERIAL IN ANY WAY, UNLESS DONE UNDER THE DIRECTION OF A COMPARABLE PROFESSIONAL, I.E. ARCHITECT FOR AN ARCHITECT, ENGINEER FOR AN ENGINEER OR LANDSCAPE ARCHITECT FOR A LANDSCAPE ARCHITECT, IS A VIOLATION OF THE NEW YORK STATE EDUCATION LAW AND/OR REGULATIONS AND IS A CLASS 'A' MISDEMEANOR.

REGISTERED ARCHITECT WILLIAM B. SELAN STATE OF NEW YORK No. 105…

CONTRACT: CONSTRUCTION
TITLE: MAJOR BUILDING RENOVATIONS FOR THE MANHATTAN FORENSIC RELOCATION
LOCATION: MANHATTAN PSYCHIATRIC CENTER, BUILDING No. 102 600 EAST 125TH STREET WARDS ISLAND, NY10035
CLIENT: NYS OFFICE OF MENTAL HEALTH

MARK	DATE	DESCRIPTION
A8	09-24-2015	ADDENDUM # 8
A6	09-03-2015	ADDENDUM # 6
A5	08-12-2015	ADDENDUM # 5
	6-15-2015	BID DOCUMENT

PROJECT NUMBER: 44578
DESIGNED BY: MAK / WW
DRAWN BY: LR / LM / WW / JS / JM / DF / YB / YK
FIELD CHECK: N/A
APPROVED: WS / MAK / LF

SHEET TITLE: CODE ANALYSIS
BUILDING NUMBER: 102
DRAWING NUMBER: G-004-2
SHEET

BASEMENT GENERAL NOTES

1. THE LAYOUTS SHOWN ON THIS DRAWING ARE THE FINAL DESIGN LAYOUT- NOT THE EXISTING CONDITION.
2. THE EXISTING BASEMENT CORRIDOR CONNECTING TO MEYER, KIRBY, AND BUILDING 106 ARE SHOWN ON G007. SEE DRAWING AD200 FOR THE AREAS TO BE DEMOLISHED IN PHASES COORDINATED WITH MPC ADMINISTRATION.
3. THIS FLOOR IS A BUSINESS SUB-OCCUPANCY; DEAD ENDS 50FT MAX, TRAVEL DISTANCE 300FT

EGRESS NOTES

1. ALL STAIRS ARE 2HR RATED.
2. ALL STAIRS ARE 44" WIDE AND ARE ACCESSED THROUGH 34 3/4" CLEAR DOOR OPENINGS. THEY EACH HAVE A CAPACITY OF 147.
3. HORIZONTAL EXITS WITH DOUBLE EGRESS DOORS ARE 78" WIDE. THE EXIT UNITS ARE CALCULATED USING ONLY THE LEAF IN THE DIRECTION OF TRAVEL WHICH IS 38" GIVING THE CAPACITY OF 190 PEOPLE IN EACH DIRECTION.
4. ALL INTERIOR SINGLE LEAF DOORS ARE 36" DOOR WITH 34 3/4" CLEAR OPENING FOR A CAPACITY OF 170 EACH.
5. ALL SMOKE COMPARTMENTS HAVE MAX TRAVEL DISTANCE OF LESS THAN 200 FT. TO A SMOKE BARRIER.

S — SMOKE AND 1 HR FIRE BARRIER
SMOKE PARTITION
SUITE BOUNDARY, MAX TOTAL DISTSNCE 200FT
HE — HORIZONTAL EXIT 2HR FIRE AND SMOKE
3HR PARTITION
2HR PARTITION
EXIST. 2HR PARTITION
1HR PARTITION
TRAVEL DISTANCE FROM A REMOTE POINT IN A SUITE TO EXIT ACCESS
TRAVEL DISTANCE FROM A REMOTE POINT TO A SMOKE BARRIER
℄ CENTER LINE

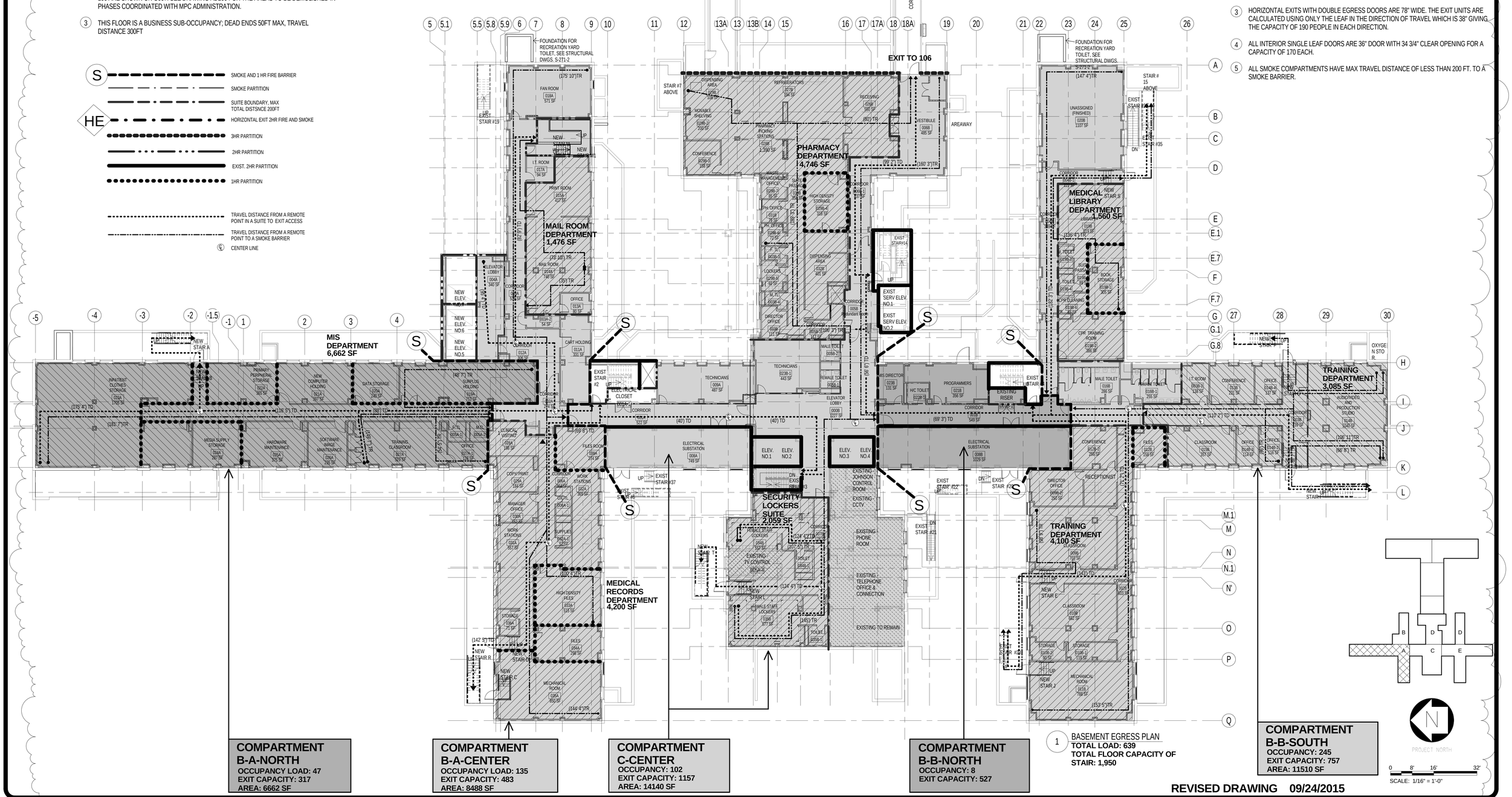

1 BASEMENT EGRESS PLAN
TOTAL LOAD: 639
TOTAL FLOOR CAPACITY OF STAIR: 1,950

REVISED DRAWING 09/24/2015

NEW YORK STATE OF OPPORTUNITY. Office of General Services
DESIGN & CONSTRUCTION

CONSULTANTS:
RBSD ARCHITECTS P.C. | STV 100 Years
A Joint Venture
225 Park Avenue South
New York, New York 10003

WARNING:
THE ALTERATION OF THIS MATERIAL IN ANY WAY, UNLESS DONE UNDER THE DIRECTION OF A COMPARABLE PROFESSIONAL. I.E. ARCHITECT FOR AN ARCHITECT, ENGINEER FOR AN ENGINEER OR LANDSCAPE ARCHITECT FOR A LANDSCAPE ARCHITECT, IS A VIOLATION OF THE NEW YORK STATE EDUCATION LAW AND/OR REGULATIONS AND IS A CLASS 'A' MISDEMEANOR.

CONTRACT: CONSTRUCTION
TITLE: MAJOR BUILDING RENOVATIONS FOR THE MANHATTAN FORENSIC RELOCATION
LOCATION: MANHATTAN PSYCHIATRIC CENTER, BUILDING No. 102
600 EAST 125TH STREET WARDS ISLAND, NY10035
CLIENT: NYS OFFICE OF MENTAL HEALTH

MARK	DATE	DESCRIPTION
A8	09-24-2015	ADDENDUM # 8
A6	09-03-2015	ADDENDUM # 6
A5	08-12-2015	ADDENDUM # 5
	6-15-2015	BID DOCUMENT

PROJECT NUMBER: 44578
DESIGNED BY: MAK / WW
DRAWN BY: LR / LM / WW / JS / JM / DF / YB / YK
FIELD CHECK: N/A
APPROVED: WS / MAK / LF

SHEET TITLE: BASEMENT EGRESS PLAN
BUILDING NUMBER: 102
DRAWING NUMBER: G-100-2
SHEET

9/22/2015 5:53:53 PM

EGRESS NOTES

1. ALL STAIRS ARE 2HR RATED.
2. ALL STAIRS ARE 44" WIDE AND ARE ACCESSED THROUGH 34 3/4" CLEAR DOOR OPENINGS. THEY EACH HAVE A CAPACITY OF 147.
3. HORIZONTAL EXITS WITH DOUBLE EGRESS DOORS ARE 78" WIDE. THE EXIT UNITS ARE CALCULATED USING ONLY THE LEAF IN THE DIRECTION OF TRAVEL WHICH IS 38" GIVING THE CAPACITY OF 190 PEOPLE IN EACH DIRECTION.
4. ALL INTERIOR SINGLE LEAF DOORS ARE 36" DOOR WITH 34 3/4" CLEAR OPENING FOR A CAPACITY OF 170 EACH.
5. ALL SMOKE COMPARTMENTS HAVE MAX TRAVEL DISTANCE OF LESS THAN 200 FT. TO A SMOKE BARRIER.

- HE — HORIZONTAL EXIT 2HR FIRE
- 2HR PARTITION
- EXIST. 2HR PARTITION
- S 2HR — 2HR FIRE AND SMOKE OCCUPANCY SEPARATION
- S — SMOKE AND 1HR FIRE BARRIER
- SMOKE PARTITION
- 1 HR PARTITION
- SUITE BOUNDARY
- TRAVEL DISTANCE FROM A REMOTE POINT IN A SUITE TO AN EXIT
- TRAVEL DISTANCE FROM A REMOTE AREA TO A SMOKE BARRIER

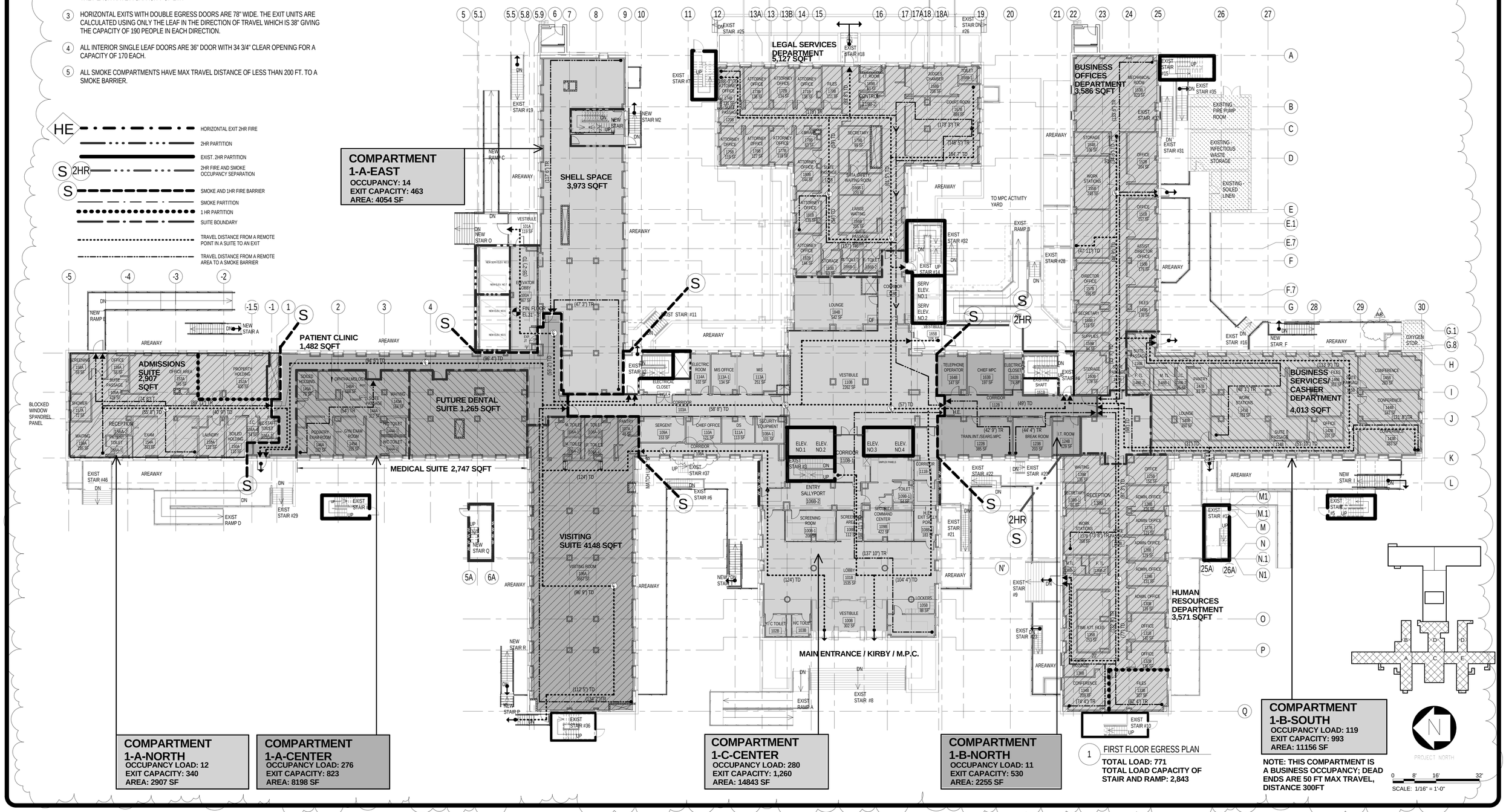

1 FIRST FLOOR EGRESS PLAN

TOTAL LOAD: 771
TOTAL LOAD CAPACITY OF STAIR AND RAMP: 2,843

SCALE: 1/16" = 1'-0"

NEW YORK STATE OF OPPORTUNITY. Office of General Services

DESIGN & CONSTRUCTION

CONSULTANTS:

RBSD ARCHITECTS P.C. | STV 100 Years

A Joint Venture

225 Park Avenue South
New York, New York 10003

WARNING:
THE ALTERATION OF THIS MATERIAL IN ANY WAY, UNLESS DONE UNDER THE DIRECTION OF A COMPARABLE PROFESSIONAL, I.E. ARCHITECT FOR AN ARCHITECT, ENGINEER FOR AN ENGINEER OR LANDSCAPE ARCHITECT FOR A LANDSCAPE ARCHITECT, IS A VIOLATION OF THE NEW YORK STATE EDUCATION LAW AND/OR REGULATIONS AND IS A CLASS 'A' MISDEMEANOR.

CONTRACT: CONSTRUCTION

TITLE: MAJOR BUILDING RENOVATIONS FOR THE MANHATTAN FORENSIC RELOCATION

LOCATION: MANHATTAN PSYCHIATRIC CENTER, BUILDING No. 102
600 EAST 125TH STREET WARDS ISLAND, NY10035

CLIENT: NYS OFFICE OF MENTAL HEALTH

MARK	DATE	DESCRIPTION
AS	8-12-2015	ADDENDUM # 5
	6-15-2015	BID DOCUMENT

PROJECT NUMBER: 44578
DESIGNED BY: MAK / WW
DRAWN BY: LR / LM / WW / JS / JM / DF / YB / YK
FIELD CHECK: N/A
APPROVED: WS / MAK / LF

SHEET TITLE: FIRST FLOOR EGRESS PLAN

BUILDING NUMBER: 102
DRAWING NUMBER: G-101-2
SHEET

9/2/2015 5:54:19 PM

EGRESS NOTES

1. ALL STAIRS ARE 2HR RATED.
2. ALL STAIRS ARE 44" WIDE AND ARE ACCESSED THROUGH 34 3/4" CLEAR DOOR OPENINGS. THEY EACH HAVE A CAPACITY OF 147.
3. HORIZONTAL EXITS WITH DOUBLE EGRESS DOORS ARE 78" WIDE. THE EXIT UNITS ARE CALCULATED USING ONLY THE LEAF IN THE DIRECTION OF TRAVEL WHICH IS 38" GIVING THE CAPACITY OF 190 PEOPLE IN EACH DIRECTION.
4. ALL INTERIOR SINGLE LEAF DOORS ARE 36" DOOR WITH 34 3/4" CLEAR OPENING FOR A CAPACITY OF 170 EACH.
5. ALL SMOKE COMPARTMENTS HAVE MAX TRAVEL DISTANCE OF LESS THAN 200 FT. TO A SMOKE BARRIER.

S — SMOKE AND 1 HR FIRE BARRIER
SMOKE PARTITION
SUITE BOUNDARY, MAX TOTAL DISTSNCE 200FT
HE — HORIZONTAL EXIT 2HR FIRE AND SMOKE
3HR PARTITION
2HR PARTITION
EXIST. 2HR PARTITION
1HR PARTITION
A8 — TRAVEL DISTANCE FROM A REMOTE POINT IN A SUITE TO EXIT ACCESS
TRAVEL DISTANCE FROM A REMOTE POINT TO A SMOKE BARRIER
℄ CENTER LINE

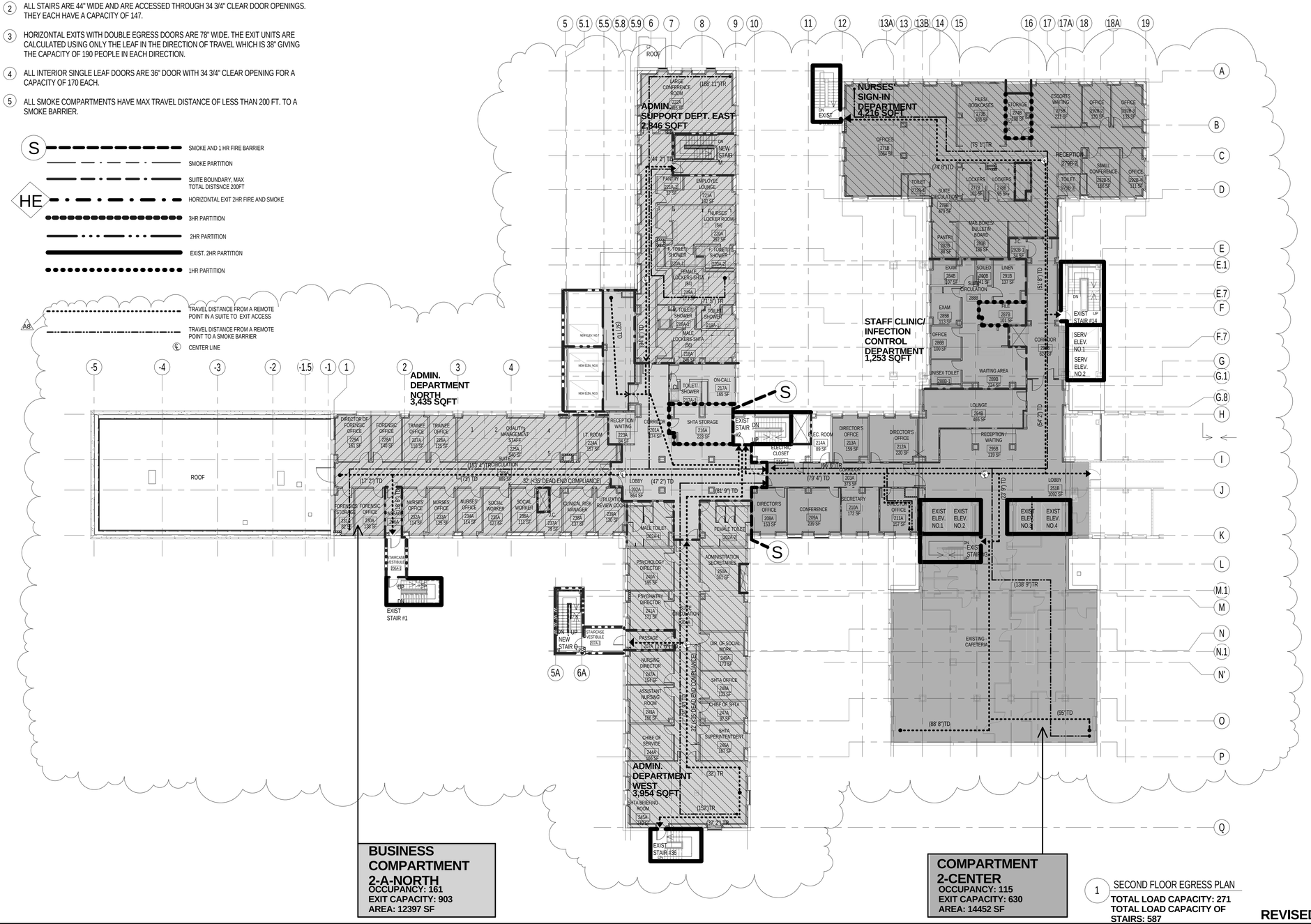

1 SECOND FLOOR EGRESS PLAN

TOTAL LOAD CAPACITY: 271
TOTAL LOAD CAPACITY OF STAIRS: 587

REVISED DRAWING 09/24/2015

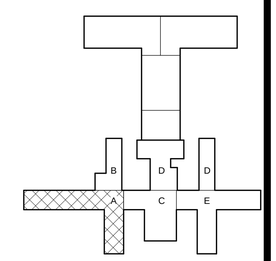

PROJECT NORTH

0 8' 16' 32'
SCALE: 1/16" = 1'-0"

NEW YORK STATE OF OPPORTUNITY. Office of General Services

DESIGN & CONSTRUCTION

CONSULTANTS:

RBSD ARCHITECTS P.C. | STV 100 Years

A Joint Venture
225 Park Avenue South
New York, New York 10003

WARNING:
THE ALTERATION OF THIS MATERIAL IN ANY WAY, UNLESS DONE UNDER THE DIRECTION OF A COMPARABLE PROFESSIONAL, I.E. ARCHITECT FOR AN ARCHITECT, ENGINEER FOR AN ENGINEER OR LANDSCAPE ARCHITECT FOR A LANDSCAPE ARCHITECT, IS A VIOLATION OF THE NEW YORK STATE EDUCATION LAW AND/OR REGULATIONS AND IS A CLASS 'A' MISDEMEANOR.

CONTRACT: CONSTRUCTION

TITLE: MAJOR BUILDING RENOVATIONS FOR THE MANHATTAN FORENSIC RELOCATION

LOCATION: MANHATTAN PSYCHIATRIC CENTER, BUILDING No. 102
600 EAST 125TH STREET WARDS ISLAND, NY10035

CLIENT: NYS OFFICE OF MENTAL HEALTH

MARK	DATE	DESCRIPTION
A8	09-24-2015	ADDENDUM # 8
A6	09-03-2015	ADDENDUM # 6
A5	08-12-2015	ADDENDUM # 5
	6-15-2015	BID DOCUMENT

PROJECT NUMBER: 44578
DESIGNED BY: MAK / WW
DRAWN BY: LR / LM / WW / JS / JM / DF / YB / YK
FIELD CHECK: N/A
APPROVED: WS / MAK / LF

SHEET TITLE: SECOND FLOOR EGRESS PLAN

BUILDING NUMBER: 102
DRAWING NUMBER: G-102-2
SHEET

9/22/2015 5:54:35 PM

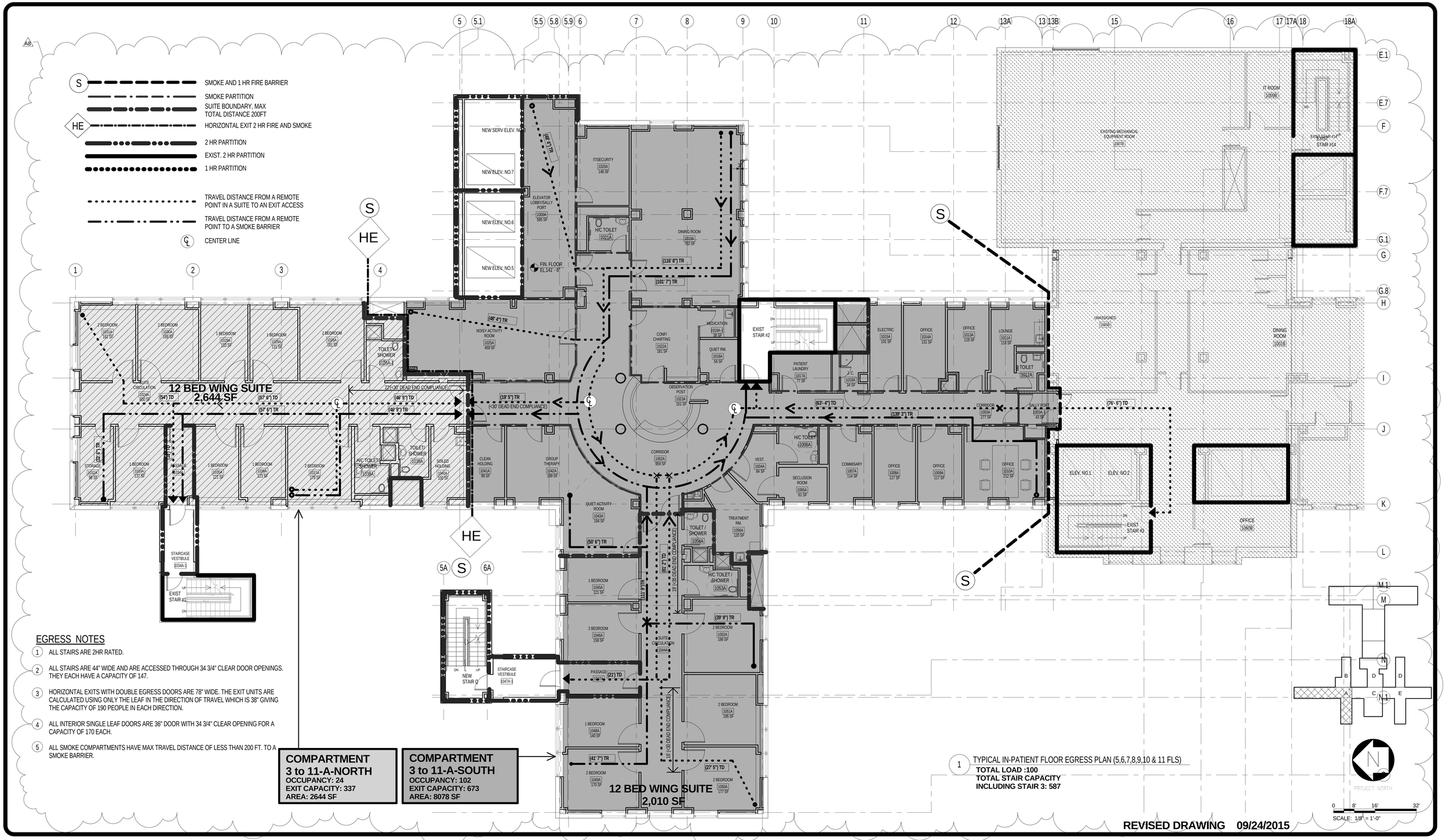

NEW YORK STATE OF OPPORTUNITY. Office of General Services

DESIGN & CONSTRUCTION

CONSULTANTS:

RBSD ARCHITECTS P.C. | STV 100 Years

A Joint Venture

225 Park Avenue South
New York, New York 10003

WARNING:
THE ALTERATION OF THIS MATERIAL IN ANY WAY, UNLESS DONE UNDER THE DIRECTION OF A COMPARABLE PROFESSIONAL, I.E. ARCHITECT FOR AN ARCHITECT, ENGINEER FOR AN ENGINEER OR LANDSCAPE ARCHITECT FOR A LANDSCAPE ARCHITECT, IS A VIOLATION OF THE NEW YORK STATE EDUCATION LAW AND/OR REGULATIONS AND IS A CLASS 'A' MISDEMEANOR.

REGISTERED ARCHITECT WILLIAM B. SEAN

CONTRACT: CONSTRUCTION

TITLE: MAJOR BUILDING RENOVATIONS FOR THE MANHATTAN FORENSIC RELOCATION

LOCATION: MANHATTAN PSYCHIATRIC CENTER, BUILDING No. 102
600 EAST 125TH STREET WARDS ISLAND, NY10035

CLIENT: NYS OFFICE OF MENTAL HEALTH

MARK	DATE	DESCRIPTION
A8	09-24-2015	ADDENDUM # 8
A6	09-03-2015	ADDENDUM # 6
A5	08-12-2015	ADDENDUM # 5
	6-15-2015	BID DOCUMENT

PROJECT NUMBER:	44578
DESIGNED BY:	MAK / WW
DRAWN BY:	LR / LM / WW / JS / JM / DF / YB / YK
FIELD CHECK:	N/A
APPROVED:	WS / MAK / LF

SHEET TITLE:

TYPICAL IN-PATIENT FLOOR EGRESS PLAN (3 to 11 FLS)

BUILDING NUMBER: 102

DRAWING NUMBER: G-110-2

SHEET

9/22/2015 5:54:49 PM

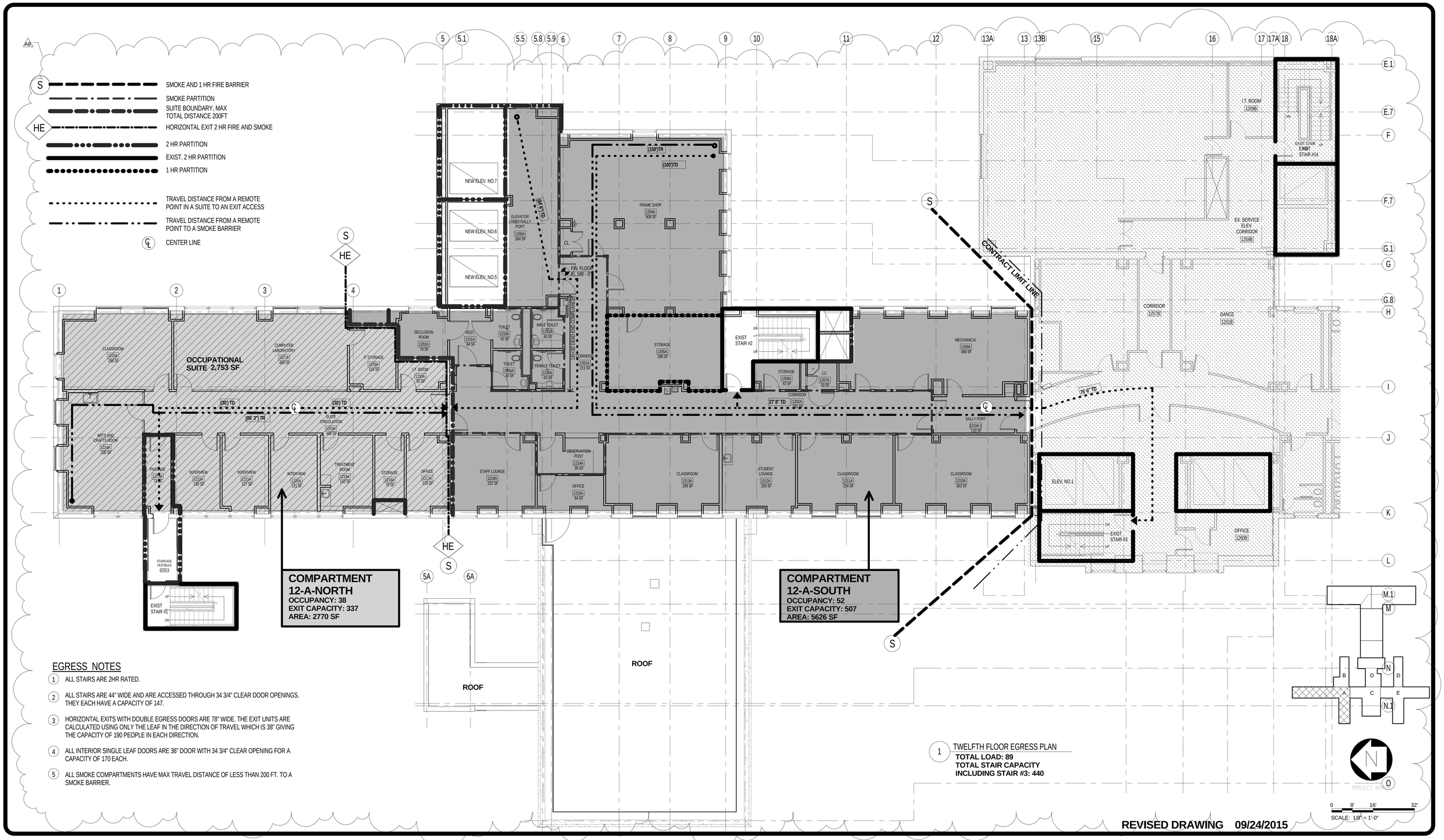

EGRESS NOTES

1. ALL STAIRS ARE 2HR RATED.
2. ALL STAIRS ARE 44" WIDE AND ARE ACCESSED THROUGH 34 3/4" CLEAR DOOR OPENINGS. THEY EACH HAVE A CAPACITY OF 147.
3. HORIZONTAL EXITS WITH DOUBLE EGRESS DOORS ARE 78" WIDE. THE EXIT UNITS ARE CALCULATED USING ONLY THE LEAF IN THE DIRECTION OF TRAVEL WHICH IS 38" GIVING THE CAPACITY OF 190 PEOPLE IN EACH DIRECTION.
4. ALL INTERIOR SINGLE LEAF DOORS ARE 36" DOOR WITH 34 3/4" CLEAR OPENING FOR A CAPACITY OF 170 EACH.
5. ALL SMOKE COMPARTMENTS HAVE MAX TRAVEL DISTANCE OF LESS THAN 200 FT. TO A SMOKE BARRIER.

1 TWELFTH FLOOR EGRESS PLAN

TOTAL LOAD: 89
TOTAL STAIR CAPACITY INCLUDING STAIR #3: 440

REVISED DRAWING 09/24/2015

NEW YORK STATE OF OPPORTUNITY. | Office of General Services

DESIGN & CONSTRUCTION

CONSULTANTS:

RBSD ARCHITECTS P.C. | STV 100 Years

A Joint Venture
225 Park Avenue South
New York, New York 10003

WARNING:
THE ALTERATION OF THIS MATERIAL IN ANY WAY, UNLESS DONE UNDER THE DIRECTION OF A COMPARABLE PROFESSIONAL. I.E. ARCHITECT FOR AN ARCHITECT, ENGINEER FOR AN ENGINEER OR LANDSCAPE ARCHITECT FOR A LANDSCAPE ARCHITECT, IS A VIOLATION OF THE NEW YORK STATE EDUCATION LAW AND/OR REGULATIONS AND IS A CLASS 'A' MISDEMEANOR.

REGISTERED ARCHITECT WILLIAM M. BOLAN NO. 10[illegible] STATE OF NEW YORK

CONTRACT: CONSTRUCTION

TITLE: MAJOR BUILDING RENOVATIONS FOR THE MANHATTAN FORENSIC RELOCATION

LOCATION: MANHATTAN PSYCHIATRIC CENTER, BUILDING No. 102
600 EAST 125TH STREET WARDS ISLAND, NY10035

CLIENT: NYS OFFICE OF MENTAL HEALTH

MARK	DATE	DESCRIPTION
A8	09-24-2015	ADDENDUM # 8
A6	09-03-2015	ADDENDUM # 6
A5	08-12-2015	ADDENDUM # 5
	6-15-2015	BID DOCUMENT

PROJECT NUMBER: 44578
DESIGNED BY: MAK / WW
DRAWN BY: LR / LM / WW / JS / JM / DF / YB / YK
FIELD CHECK: N/A
APPROVED: WS / MAK / LF

SHEET TITLE: TWELFTH FLOOR EGRESS PLAN

BUILDING NUMBER: 102
DRAWING NUMBER: G-112-2
SHEET

9/22/2015 5:55:01 PM

A8

EGRESS NOTES

1. ALL STAIRS ARE 2HR RATED.
2. ALL STAIRS ARE 44" WIDE AND ARE ACCESSED THROUGH 34 3/4" CLEAR DOOR OPENINGS. THEY EACH HAVE A CAPACITY OF 147.
3. HORIZONTAL EXITS WITH DOUBLE EGRESS DOORS ARE 78" WIDE. THE EXIT UNITS ARE CALCULATED USING ONLY THE LEAF IN THE DIRECTION OF TRAVEL WHICH IS 38" GIVING THE CAPACITY OF 190 PEOPLE IN EACH DIRECTION.
4. ALL INTERIOR SINGLE LEAF DOORS ARE 36" DOOR WITH 34 3/4" CLEAR OPENING FOR A CAPACITY OF 170 EACH.
5. ALL SMOKE COMPARTMENTS HAVE MAX TRAVEL DISTANCE OF LESS THAN 200 FT. TO A SMOKE BARRIER.

S — SMOKE AND 1 HR FIRE BARRIER
SMOKE PARTITION
SUITE BOUNDARY, MAX TOTAL DISTANCE 200FT
HE — HORIZONTAL EXIT 2 HR FIRE AND SMOKE
2 HR PARTITION
EXIST. 2 HR PARTITION
1 HR PARTITION
TRAVEL DISTANCE FROM A REMOTE POINT IN A SUITE TO AN EXIT ACCESS
TRAVEL DISTANCE FROM A REMOTE POINT TO A SMOKE BARRIER
℄ CENTER LINE

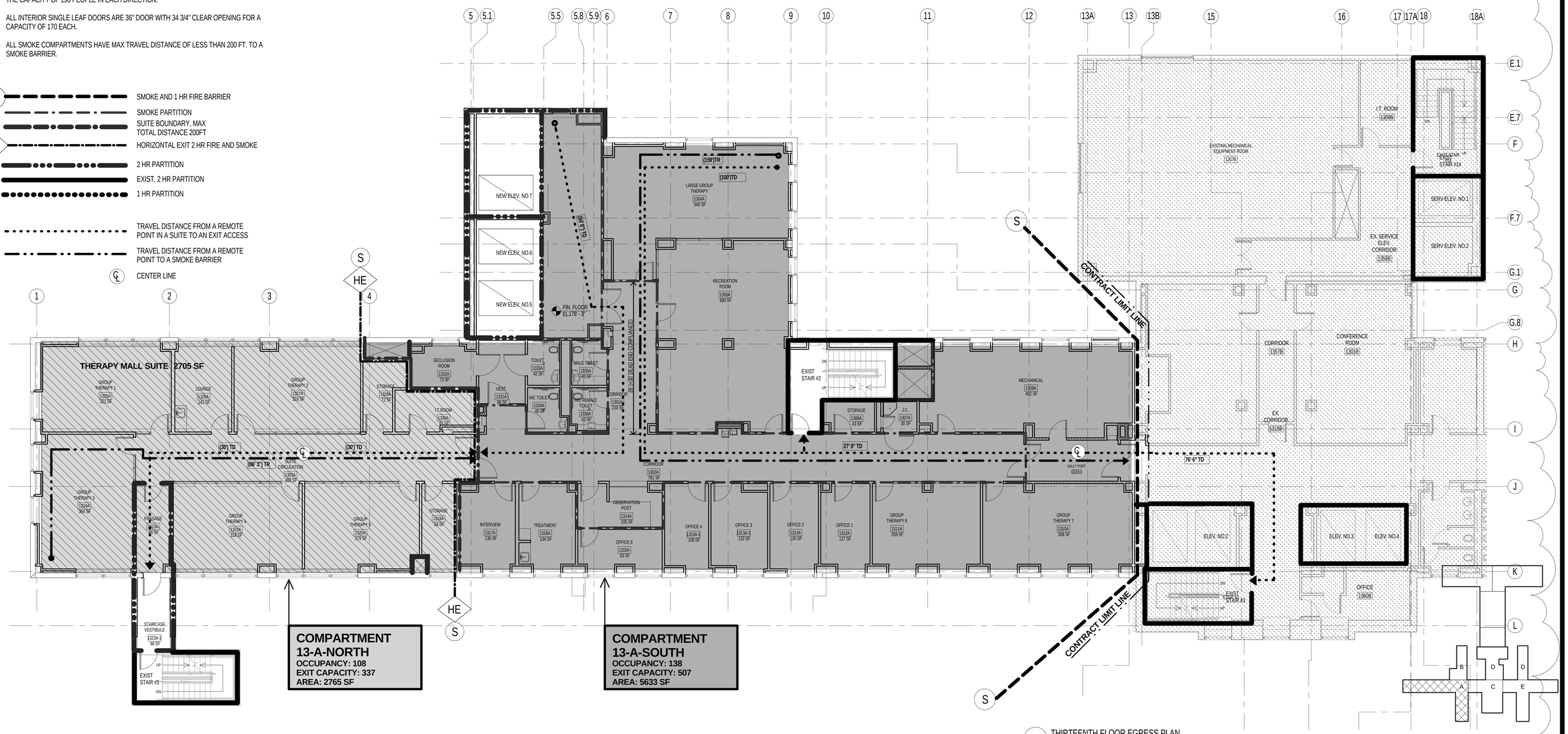

1 THIRTEENTH FLOOR EGRESS PLAN

TOTAL LOAD: 138
TOTAL CAPACITY INCLUDING STAIR #3: 441

0 8' 16' 32'
SCALE: 1/8" = 1'-0"

REVISED DRAWING 09/24/2015

NEW YORK STATE OF OPPORTUNITY. | Office of General Services

DESIGN & CONSTRUCTION

CONSULTANTS:
RBSD ARCHITECTS P.C. | STV 100 Years
A Joint Venture
225 Park Avenue South
New York, New York 10003

WARNING:
THE ALTERATION OF THIS MATERIAL IN ANY WAY, UNLESS DONE UNDER THE DIRECTION OF A COMPARABLE PROFESSIONAL, I.E. ARCHITECT FOR AN ARCHITECT, ENGINEER FOR AN ENGINEER OR LANDSCAPE ARCHITECT FOR A LANDSCAPE ARCHITECT, IS A VIOLATION OF THE NEW YORK STATE EDUCATION LAW AND/OR REGULATIONS AND IS A CLASS 'A' MISDEMEANOR.

CONTRACT: CONSTRUCTION
TITLE: MAJOR BUILDING RENOVATIONS FOR THE MANHATTAN FORENSIC RELOCATION
LOCATION: MANHATTAN PSYCHIATRIC CENTER, BUILDING No. 102 600 EAST 125TH STREET WARDS ISLAND, NY10035
CLIENT: NYS OFFICE OF MENTAL HEALTH

MARK	DATE	DESCRIPTION
A8	09-24-2015	ADDENDUM # 8
A6	09-03-2015	ADDENDUM # 6
A5	08-12-2015	ADDENDUM # 5
	6-15-2015	BID DOCUMENT

PROJECT NUMBER: 44578
DESIGNED BY: MAK / WW
DRAWN BY: LR / LM / WW / JS / JM / DF / YB / YK
FIELD CHECK: N/A
APPROVED: WS / MAK / LF

SHEET TITLE: THIRTEENTH FLOOR EGRESS PLAN
BUILDING NUMBER: 102
DRAWING NUMBER: G-113-2
SHEET

9/22/2015 5:55:43 PM

EGRESS NOTES

A8

1. ALL STAIRS ARE 2HR RATED.
2. ALL STAIRS ARE 44" WIDE AND ARE ACCESSED THROUGH 34 3/4" CLEAR DOOR OPENINGS. THEY EACH HAVE A CAPACITY OF 147.
3. HORIZONTAL EXITS WITH DOUBLE EGRESS DOORS ARE 78" WIDE. THE EXIT UNITS ARE CALCULATED USING ONLY THE LEAF IN THE DIRECTION OF TRAVEL WHICH IS 38" GIVING THE CAPACITY OF 190 PEOPLE IN EACH DIRECTION.
4. ALL INTERIOR SINGLE LEAF DOORS ARE 36" DOOR WITH 34 3/4" CLEAR OPENING FOR A CAPACITY OF 170 EACH.
5. ALL SMOKE COMPARTMENTS HAVE MAX TRAVEL DISTANCE OF LESS THAN 200 FT. TO A SMOKE BARRIER.

S — SMOKE AND 1 HR FIRE BARRIER
SMOKE PARTITION
SUITE BOUNDARY, MAX TOTAL DISTANCE 200FT
HE — HORIZONTAL EXIT 2 HR FIRE AND SMOKE
2 HR PARTITION
EXIST. 2 HR PARTITION
1 HR PARTITION
TRAVEL DISTANCE FROM A REMOTE POINT IN A SUITE TO AN EXIT ACCESS
TRAVEL DISTANCE FROM A REMOTE POINT TO A SMOKE BARRIER
℄ CENTER LINE

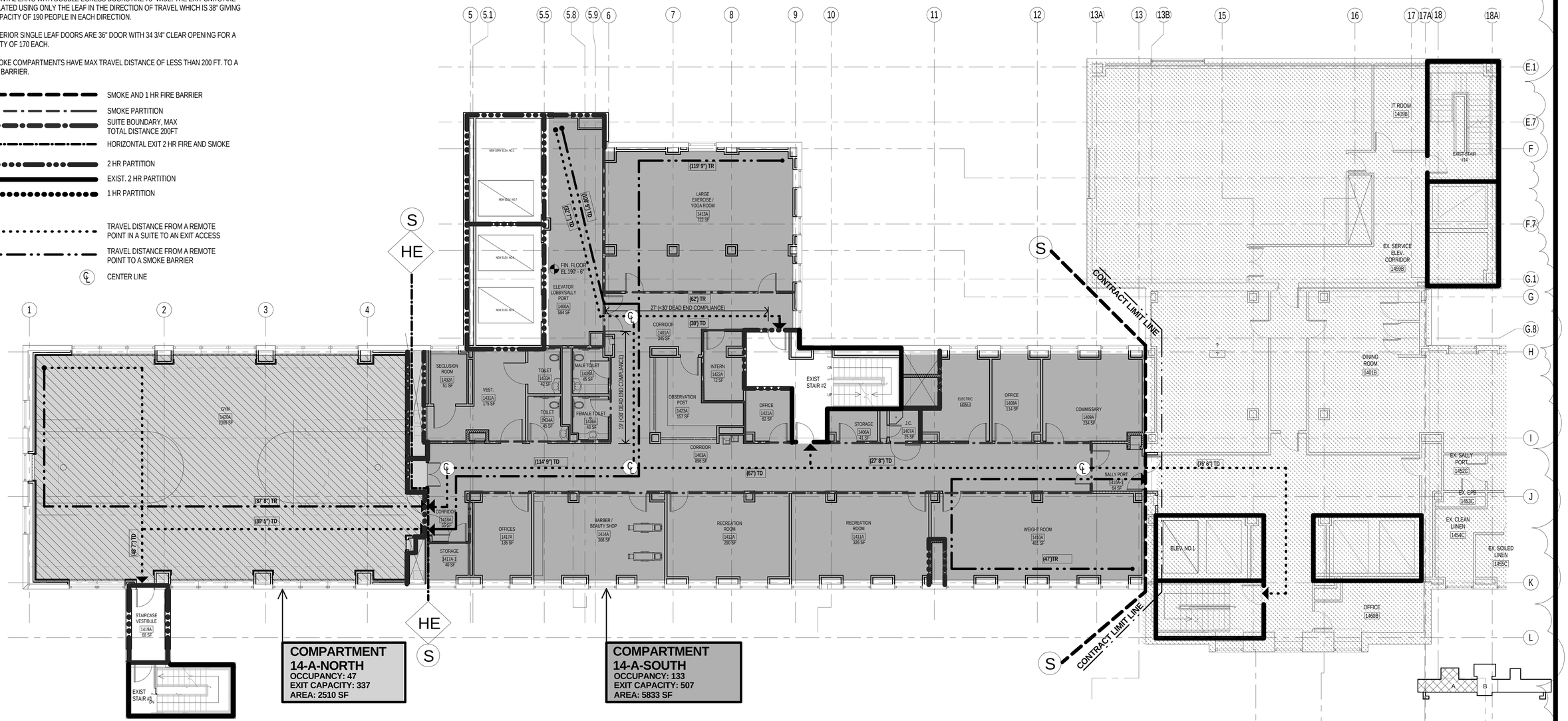

1 FOURTEENTH FLOOR EGRESS PLAN

TOTAL LOAD: 181
TOTAL CAPACITY INCLUDING STAIR #3: 843

SCALE: 1/8" = 1'-0"

NEW YORK STATE OF OPPORTUNITY. Office of General Services

DESIGN & CONSTRUCTION

CONSULTANTS:

RBSD ARCHITECTS P.C. | STV 100 Years

A Joint Venture

225 Park Avenue South
New York, New York 10003

WARNING:
THE ALTERATION OF THIS MATERIAL IN ANY WAY, UNLESS DONE UNDER THE DIRECTION OF A COMPARABLE PROFESSIONAL, I.E. ARCHITECT FOR AN ARCHITECT, ENGINEER FOR AN ENGINEER OR LANDSCAPE ARCHITECT FOR A LANDSCAPE ARCHITECT, IS A VIOLATION OF THE NEW YORK STATE EDUCATION LAW AND/OR REGULATIONS AND IS A CLASS 'A' MISDEMEANOR.

REGISTERED ARCHITECT WILLIAM B. SELAN

CONTRACT: CONSTRUCTION

TITLE: MAJOR BUILDING RENOVATIONS FOR THE MANHATTAN FORENSIC RELOCATION

LOCATION: MANHATTAN PSYCHIATRIC CENTER, BUILDING No. 102
600 EAST 125TH STREET WARDS ISLAND, NY10035

CLIENT: NYS OFFICE OF MENTAL HEALTH

MARK	DATE	DESCRIPTION
A5	8-12-2015	ADDENDUM # 5
	6-15-2015	BID DOCUMENT

PROJECT NUMBER: 44578
DESIGNED BY: MAK / WW
DRAWN BY: LR / LM / WW / JS / JM / DF / YB / YK
FIELD CHECK: N/A
APPROVED: WS / MAK / LF

SHEET TITLE: FOURTEENTH FLOOR EGRESS PLAN

BUILDING NUMBER: 102
DRAWING NUMBER: G-114-2
SHEET

9/22/2015 5:55:54 PM

WORK AREA	LOCATION	HOMOGENOUS AREA #	MATERIAL	ESTIMATED QUANTITY	REMOVAL METHOD	CONTAINMENT TYPE	APPLICABLE REGULATIONS	REMARKS
WA-1	SUB BASEMENT AREA - A-WING	--	FIRE DOOR INSULATION	3 UNITS	INT/EXT FRIABLE	NEGATIVE PRESSURE TENT ENCLOSURE OR INTACT REMOVAL WITH VARIANCE	12 NYCRR PART 56 7.11 (c) OR 7.11(f)	CONTRACTOR HAS THE OPTION TO APPLY FOR A NYSDOL SITE SPECIFIC VARIANCE TO ALLOW FOR "INTACT" COMPONENT REMOVAL FOR INTERIOR FRIABLE MATERIAL REMOVALS IN ACCORDANCE WITH SECTION 028213-1.06.
		--	DOUBLE FIRE DOOR INSULATION	1 UNITS				
		--	ELECTRICAL WIRE INSULATION	500 LF	INTERIOR FRIABLE	NEGATIVE PRESSURE TENT ENCLOSURE	12 NYCRR PART 56 7.11 (f)	WIRING IS LOCATED THROUGHOUT THE BASEMENT AREA ASSOCIATED WITH ELECTRICAL PANELS, FEEDERS, BRANCH CIRCUITS AND RECEPTACLES.
		--	ELECTRICAL PANELS	4 UNITS	INTERIOR NON-FRIABLE	NEGATIVE PRESSURE TENT ENCLOSURE OR INTACT REMOVAL WITH VARIANCE	12 NYCRR PART 56 7.11 (c) OR 7.11(f)	CONTRACTOR HAS THE OPTION TO APPLY FOR A NYSDOL SITE SPECIFIC VARIANCE TO ALLOW FOR "INTACT" COMPONENT REMOVAL FOR INTERIOR NON-FRIABLE MATERIAL REMOVALS IN ACCORDANCE WITH SECTION 028213-1.06.
WA-2	SUB BASEMENT AREA - CENTER CORE	--	FIRE DOOR INSULATION	6 UNITS	INT/EXT FRIABLE	NEGATIVE PRESSURE TENT ENCLOSURE OR INTACT REMOVAL WITH VARIANCE	12 NYCRR PART 56 7.11 (c) OR 7.11 (f)	CONTRACTOR HAS THE OPTION TO APPLY FOR A NYSDOL SITE SPECIFIC VARIANCE TO ALLOW FOR "INTACT" COMPONENT REMOVAL FOR INTERIOR FRIABLE MATERIAL REMOVALS IN ACCORDANCE WITH SECTION 028213-1.06.
		HA-03	EXTERIOR WINDOW CAULK	2 UNITS	EXTERIOR NON FRIABLE	REGULATED ASBESTOS WORK AREA	12 NYCRR PART 56 11.6	CONTRACTOR TO ASSUME EACH WINDOW CONTAINS 40 LF OF EXTERIOR WINDOW CAULK.
		--	ELECTRICAL WIRE INSULATION	2,500 LF	INTERIOR FRIABLE	NEGATIVE PRESSURE TENT ENCLOSURE	12 NYCRR PART 56 7.11 (f)	WIRING IS LOCATED THROUGHOUT THE BASEMENT AREA ASSOCIATED WITH ELECTRICAL PANEL, FEEDERS, BRANCH CIRCUITS AND RECEPTACLES.
		HA-05	PIPE DOPE	40 UNITS	EXTERIOR FRIABLE	NEGATIVE PRESSURE TENT ENCLOSURE OR INTACT REMOVAL WITH VARIANCE	12 NYCRR PART 56 7.11 (c) OR 7.11(f)	PIPE DOPE IS ASSOCIATED WITH GAS PIPING. CONTRACTOR TO ASSUME EACH UNIT CONTAINS 0.5 LF OF ACM PIPE DOPE.
		--	ELECTRICAL PANELS	25 UNITS	INTERIOR NON-FRIABLE	NEGATIVE PRESSURE TENT ENCLOSURE OR INTACT REMOVAL WITH VARIANCE	12 NYCRR PART 56 7.11 (c) OR 7.11(f)	CONTRACTOR HAS THE OPTION TO APPLY FOR A NYSDOL SITE SPECIFIC VARIANCE TO ALLOW FOR "INTACT" COMPONENT REMOVAL FOR INTERIOR NON-FRIABLE MATERIAL REMOVALS IN ACCORDANCE WITH SECTION 028213-1.06.
WA-3	SUB BASEMENT AREA - B-WING	--	FIRE DOOR INSULATION	3 UNITS	INT/EXT FRIABLE	NEGATIVE PRESSURE TENT ENCLOSURE OR INTACT REMOVAL WITH VARIANCE	12 NYCRR PART 56 7.11 (c) OR 7.11(f)	CONTRACTOR HAS THE OPTION TO APPLY FOR A NYSDOL SITE SPECIFIC VARIANCE TO ALLOW FOR "INTACT" COMPONENT REMOVAL FOR INTERIOR FRIABLE MATERIAL REMOVALS IN ACCORDANCE WITH SECTION 028213-1.06.
		--	DOUBLE FIRE DOOR INSULATION	1 UNITS				
		--	ELECTRICAL WIRE INSULATION	900 LF	INTERIOR FRIABLE	NEGATIVE PRESSURE TENT ENCLOSURE	12 NYCRR PART 56 7.11 (f)	WIRING IS LOCATED THROUGHOUT THE BASEMENT AREA ASSOCIATED WITH ELECTRICAL PANEL, FEEDERS, BRANCH CIRCUITS AND RECEPTACLES.
		--	ELECTRICAL PANELS	18 UNITS	INTERIOR NON-FRIABLE	NEGATIVE PRESSURE TENT ENCLOSURE OR INTACT REMOVAL WITH VARIANCE	12 NYCRR PART 56 7.11 (c) OR 7.11(f)	CONTRACTOR HAS THE OPTION TO APPLY FOR A NYSDOL SITE SPECIFIC VARIANCE TO ALLOW FOR "INTACT" COMPONENT REMOVAL FOR INTERIOR NON-FRIABLE MATERIAL REMOVALS IN ACCORDANCE WITH SECTION 028213-1.06.
			SUB-TOTAL	**3,900 LF / 103 UNITS**				

TABLE NOTES: [1] - Based on Matrix Survey Report Dated May 2014

A8

GENERAL NOTES:

1. THE CONTRACT DRAWINGS AND SPECIFICATIONS HAVE BEEN PREPARED FOR THE PURPOSE OF REPRESENTING THE SCOPE OF WORK AS IDENTIFIED IN MATRIX'S SUPPLEMENTAL HAZARDOUS MATERIALS SURVEY REPORT.
2. DRAWINGS ARE DIAGRAMATIC ONLY AND DO NOT REPRESENT LIKELY CONDITIONS TO BE FOUND ONSITE. IT IS THE CONTRACTORS RESPONSIBILITY TO DETERMINE EXISTING BUILDING AND JOB SITE CONDITIONS.
3. THE ABATEMENT CONTRACTOR IS REQUIRED TO PROVIDE A DETAILED ASBESTOS ABATEMENT WORK PLAN IN ACCORDANCE WITH SECTION 028213-1.08 (C) PRIOR TO MOBILIZATION.
4. THE CONTRACTOR HAS THE OPTION TO APPLY FOR AND UTILIZE ALTERNATIVE ABATEMENT METHODS THAT MAY REQUIRE A SITE SPECIFIC VARIANCE APPLICATION AND APPROVAL FROM THE NEW YORK STATE DEPARTMENT OF LABOR (NYSDOL). IF A SITE SPECIFIC VARIANCE IS SOUGHT, THE APPLICATION SHALL BE REVIEWED AND ACCEPTED BY THE OWNERS ENVIRONMENTAL CONSULTANT AND THEN MUST BE SUBMITTED BY THE CONTRACTOR'S NYSDOL CERTIFIED ASBESTOS PROJECT DESIGNER IN ACCORDANCE WITH SECTION 028213-1.06.
5. PRIOR TO REGULATED ABATEMENT WORK AREA PREPARATION, THE ASBESTOS CONTRACTOR SHALL COORDINATE WITH THE GENERAL CONTRACTOR, BUILDING OWNER AND FACILITY PERSONNEL REGARDING ANY AND ALL SECURITY AND EGRESS ISSUES THAT MAY APPLY TO THE OVERALL PROTECTION AND SAFETY OF THE BUILDING AND OCCUPANTS.
6. THIS PROJECT WILL BE SUBJECT TO THE OPERATING HOURS OF THE FACILITY OR OTHER OPERATING HOURS AS OTHERWISE APPROVED BY THE OWNER.
7. THE OWNER AND OWNER'S REPRESENTATIVES HAVE THE AUTHORITY TO STOP THE WORK AT ANY TIME IF WORK IS NOT CONDUCTED IN ACCORDANCE WITH THE SPECIFICATIONS AND APPLICABLE REGULATIONS. THE STOPPAGE OF WORK SHALL CONTINUE UNTIL CONDITIONS HAVE BEEN CORRECTED TO THE SATISFACTION OF THE OWNER AND OWNER'S REPRESENTATIVES. STANDBY TIME TO RESOLVE PROBLEMS SHALL BE AT THE CONTRACTOR'S EXPENSE.

HAZARDOUS MATERIAL NOTE:

1. LEAD-BASED PAINT (LBP) AND OTHER POTENTIALLY HAZARDOUS MATERIALS WERE IDENTIFIED DURING THE SURVEY CONDUCTED BY MATRIX NEW WORLD ENGINEERING, INC. (MATRIX). THE CONTRACTOR SHALL REFER TO THE, "HAZARDOUS MATERIAL BUILDING SURVEY REPORT," REVISED JANUARY 2015 AND PREPARED BY MATRIX (MATRIX REPORT) FOR SPECIFIC LOCATIONS AND COMPONENTS IMPACTED BY THE PROPOSED SCOPE OF WORK.
2. CONTRACTOR IS TO ASSUME ANY PAINTED SURFACE NOT IDENTIFIED IN THE MATRIX REPORT IS LBP AND SHALL TREAT IT IN ACCORDNACE WITH SPECIFICATION 028307 - HANDELING OF LEAD CONTAINING MATERIALS.

REVISED DRAWING 09/24/2015

NEW YORK STATE | Office of General Services
DESIGN & CONSTRUCTION

CONSULTANTS:
RBSD ARCHITECTS P.C. | STV 100 Years
A Joint Venture
225 Park Avenue South
New York, New York 10003
MATRIX NEW WORLD Engineering Program
Matrix New World Engineering, Inc.
26 Columbia Turnpike
Florham Park, New Jersey 07932
WBE / DBE / SBE
Tel: 973-240-1800
Fax: 973-240-1818
www.matrixneworld.com

WARNING:
THE ALTERATION OF THIS MATERIAL IN ANY WAY, UNLESS DONE UNDER THE DIRECTION OF A COMPARABLE PROFESSIONAL, I.E. ARCHITECT FOR AN ARCHITECT, ENGINEER FOR AN ENGINEER OR LANDSCAPE ARCHITECT FOR A LANDSCAPE ARCHITECT, IS A VIOLATION OF THE NEW YORK STATE EDUCATION LAW AND/OR REGULATIONS AND IS A CLASS 'A' MISDEMEANOR.

NYS EPA/NYS DOL PUBLIC DISTRIBUTION OF CERTIFIED ASBESTOS PROJECT DESIGNER CERT NO. 50-1555

CONTRACT: CONSTRUCTION

TITLE: MAJOR BUILDING RENOVATIONS FOR THE MANHATTAN FORENSIC RELOCATION

LOCATION: MANHATTAN PSYCHIATRIC CENTER, BUILDING No. 102
600 EAST 125TH STREET WARDS ISLAND, NY 10035

CLIENT: NYS OFFICE OF MENTAL HEALTH

MARK	DATE	DESCRIPTION
A8	09/24/2014	ADDENDUM #8
	6-15-2015	BID DOCUMENT

PROJECT NUMBER:	44578
DESIGNED BY:	DW
DRAWN BY:	SH
FIELD CHECK:	DW / EG
APPROVED:	EG

SHEET TITLE:
HAZARDOUS MATERIAL GENERAL NOTES AND TABLE SUB BASEMENT PLAN

BUILDING NUMBER: 102
DRAWING NUMBER: H-099-1A
SHEET

LEGEND

	SCOPE OF WORK BOUNDARY.
WA-	WORK AREA IDENTIFICATION.
	ASBESTOS-CONTAINING FIRE DOOR.
	ACM PIPE INSULATION AND FITTINGS.
	WINDOW
1	REMOVE ASBESTOS-CONTAINING FIRE DOORS IN ACCORDANCE WITH 12 NYCRR PART 56 AND THE PROJECT SPECIFICATIONS.
2	REMOVE ASBESTOS-CONTAINING EXTERIOR DOOR FRAME CAULK IN ACCORDANCE WITH 12 NYCRR PART 56 AND THE PROJECT SPECIFICATIONS.
3	REMOVE ASBESTOS-CONTAINING EXTERIOR DOOR LINTEL CAULK IN ACCORDANCE WITH 12 NYCRR PART 56 AND THE PROJECT SPECIFICATIONS.
4	REMOVE ASBESTOS-CONTAINING ELECTRICAL WIRE INSULATION IN ACCORDANCE WITH 12 NYCRR PART 56 AND THE PROJECT SPECIFICATIONS.
5	REMOVE ASBESTOS-CONTAINING ELECTRICAL PANELS IN ACCORDANCE WITH 12 NYCRR PART 56 AND THE PROJECT SPECIFICATIONS.
6	REMOVE ASBESTOS-CONTAINING ROOFING MATERIAL IN ACCORDANCE WITH 12 NYCRR PART 56 AND THE PROJECT SPECIFICATIONS.
7	REMOVE ASBESTOS CONTAINING EXTERIOR WINDOW CAULK IN ACCORDANCE WITH 12 NYCRR PART 56 AND THE PROJECT SPECIFICATIONS.
8	REMOVE ABESTOS CONTAINING PIPE DOPE IN ACCORDANCE WITH 12 NYCRR PART 56 AND THE PROJECT SPECIFICATIONS.
9	REMOVE ABESTOS CONTAINING TRANSITE PIPING IN ACCORDANCE WITH 12 NYCRR PART 56 AND THE PROJECT SPECIFICATIONS.
10	REMOVE ASBESTOS-CONTAINING WINDOW GLAZING IN ACCORDANCE WITH 12 NYCRR PART 56 AND THE PROJECT SPECIFICATIONS.
11	REMOVE ASBESTOS-CONTAINING PIPE INSULATION AND ASSOCIATED FITTINGS IN ACCORDANCE WITH 12 NYCRR PART 56 AND THE PROJECT SPECIFICATIONS.

NEGATIVE AIR UNIT NOTES:

1. VERIFY NUMBER AND LOCATION OF NEGATIVE AIR FILTRATION DEVICES NECESSARY FOR EACH WORK AREA IN ACCORDANCE WITH 12 NYCRR PART 56, 29 CFR 1926.1101 AND THE PROJECT SPECIFICATIONS. EXHAUST ALL NEGATIVE AIR UNITS TO THE EXTERIOR OF THE BUILDING.

SEQUENCING NOTES:

1. THE CONTRACTOR SHALL REMOVE ASBESTOS-CONTAINING MATERIAL (ACM) AT WORK AREAS WHERE MULTIPLE ABATEMENT ACTIVITIES ARE REQUIRED IN ACCORDANCE WITH 12 NYCRR PART 56-8.6.
2. THE CONTRACTOR SHALL BE RESPONSIBLE FOR MAINTAINING CONTINOUS ACCESS TO ALL CORRIDORS ON THE BASEMENT LEVEL THROUGHOUT THE DURATION OF DEMOLITION/ABATEMENT ACTIVITIES, FOR THE ONGOING USE OF THE FACILITY STAFF AS REQUIRED FOR THE NORMAL UNIMPEDED OPERATION OF THE FACILITY. BASE BUILDING SYSTEMS SUCH AS FIRE ALARMS, SPRINKLERS, LIGHTING, VENTILATION, HEATING ETCETERA SHALL BE TEMPORARILY RELOCATED OR TEMPORARILY SUBLEMENTED AS REQUIRED TO MAINTAIN CONTINOUS OPERATION OF ALL CORRIDORS. COORDINATE THE PHASING AND TIMING OF DEMOLITION ACTIVITIES WITH THE CONSTRUCTION MANAGER AND FACILITY PERSONNEL AND ENSURE THAT SUFFCIENT ACCESS IS PROVIDED FOR FACILITY PERSONNEL THROUGHOUT THE DEMOLITION.
3. THE CONTRACTOR SHALL COORDINATE DEMOLITION/ABATEMENT ACTIVITES WITH THE FACILITY, THE GENERAL CONTRACTOR AND OTHER TRADES, AS REQUIRED, TO MAINTAIN BASE BUILDING SYSTEMS SUCH AS FIRE ALARMS, SPRINKLERS, LIGHTING, ELECTRICAL VENTILATION, HEATING ETC.
4. THE CONTRACTOR SHALL BE RESPONSIBLE FOR FIRESTOPPING ALL PIPE AND DUCT PENERATIONS RESULTING FROM ABATEMENT ACTIVITIES, INCLUDING THOSE FROM MOUNTINGS, HANGERS, AND ANY OTHER EXISTING PENETRATIONS WITH A TWO-HOUR RATED UL-APPROVED ASSEMBLY. WALLS SCHEDULED FOR DEMOLITION ARE EXEMPT FROM THIS REQUIREMENT. CONTACTOR TO COORDINATE FIRESTOOPING WITH OTHER TRADES.
5. THE CONTRACTOR SHALL COORDINATE REMOVAL OF ELECTRICAL PANELS IN ACCORDANCE WITH THE ELECTRICAL DRAWINGS.
6. THE CONTRACTOR SHALL COORDINATE ROOFING ABATEMENT WORK WITH OTHER TRADES, AS NECESSARY.

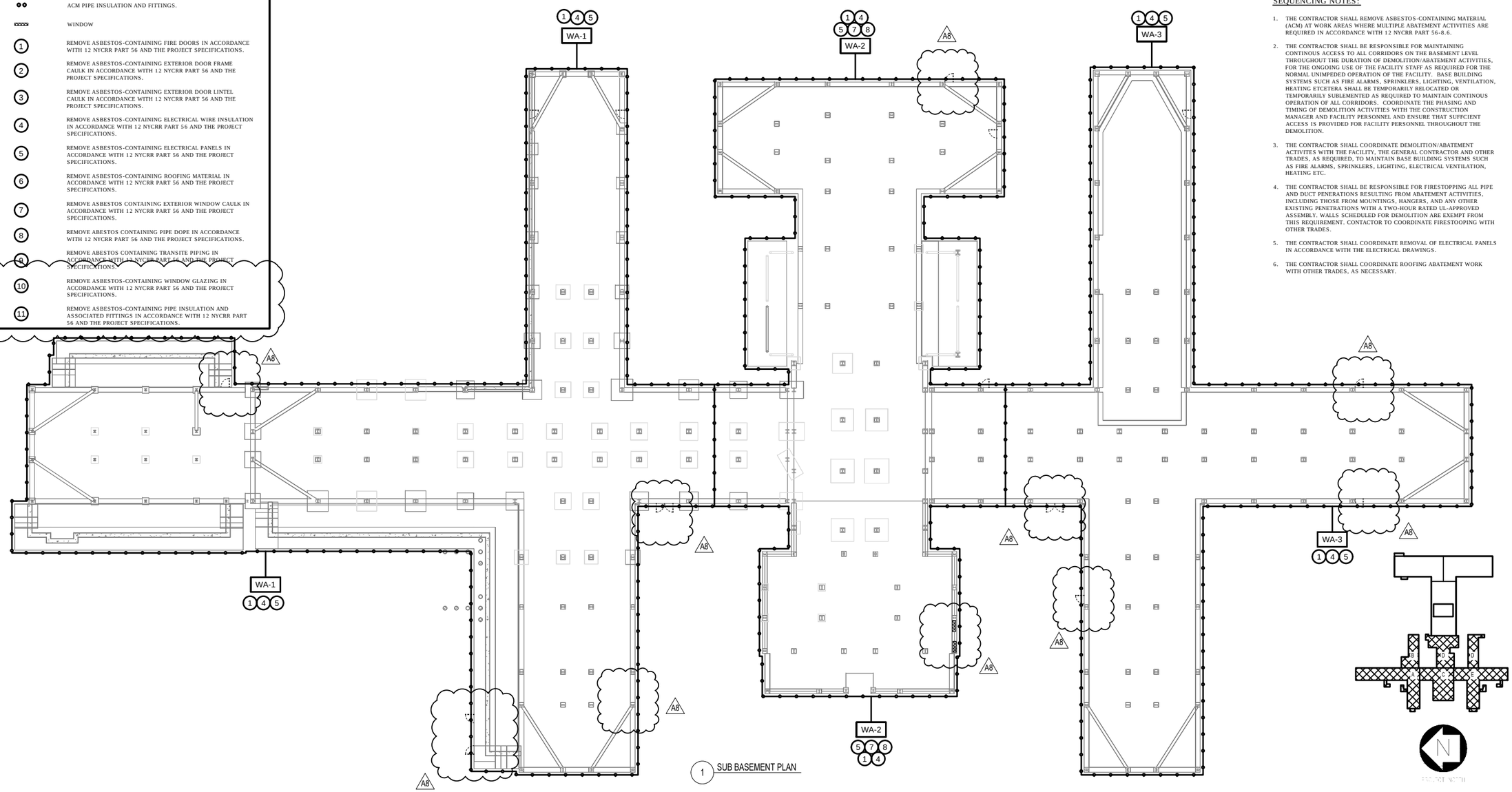

1 SUB BASEMENT PLAN

REVISED DRAWING 09/24/2015

NEW YORK STATE Office of General Services
DESIGN & CONSTRUCTION

CONSULTANTS:
RBSD ARCHITECTS P.C. | STV 100 Years
A Joint Venture
225 Park Avenue South
New York, New York 10003
MATRIX NEW WORLD Engineering, Planning
Matrix New World Engineering, Inc.
26 Columbia Turnpike
Florham Park, New Jersey 07932
Tel: 973-240-1800
Fax: 973-240-1818
WBE / DBE / SBE
www.matrixnewworld.com

WARNING:
THE ALTERATION OF THIS MATERIAL IN ANY WAY, UNLESS DONE UNDER THE DIRECTION OF A COMPARABLE PROFESSIONAL, I.E. ARCHITECT FOR AN ARCHITECT, ENGINEER FOR AN ENGINEER OR LANDSCAPE ARCHITECT FOR A LANDSCAPE ARCHITECT, IS A VIOLATION OF THE NEW YORK STATE EDUCATION LAW AND/OR REGULATIONS AND IS A CLASS 'A' MISDEMEANOR.

CONTRACT:
CONSTRUCTION

TITLE:
MAJOR BUILDING RENOVATIONS FOR THE MANHATTAN FORENSIC RELOCATION

LOCATION:
MANHATTAN PSYCHIATRIC CENTER, BUILDING No. 102
600 EAST 125TH STREET WARDS ISLAND, NY 10035

CLIENT:
NYS OFFICE OF MENTAL HEALTH

MARK	DATE	DESCRIPTION
A8	09/24/2014	ADDENDUM #8
	6-15-2015	BID DOCUMENT

PROJECT NUMBER:	44578
DESIGNED BY:	DW
DRAWN BY:	SH
FIELD CHECK:	DW / EG
APPROVED:	EG

SHEET TITLE:
HAZARDOUS MATERIAL ABATEMENT
SUB BASEMENT PLAN

BUILDING NUMBER: 102
DRAWING NUMBER: H-099-1B
SHEET

WORK AREA	LOCATION	HOMOGENOUS AREA #	MATERIAL	ESTIMATED QUANTITY	REMOVAL METHOD	CONTAINMENT TYPE	APPLICABLE REGULATIONS	REMARKS
WA-4	BASEMENT BUILDING AREA - A-WING	HA-20, 101 & 119[1]	FIRE DOOR INSULATION	3 UNITS	INT/EXT FRIABLE	NEGATIVE PRESSURE TENT ENCLOSURE OR INTACT REMOVAL WITH VARIANCE	12 NYCRR PART 56 7.11 (c) OR 7.11(f)	CONTRACTOR HAS THE OPTION TO APPLY FOR A NYSDOL SITE SPECIFIC VARIANCE TO ALLOW FOR "INTACT" COMPONENT REMOVAL FOR INTERIOR FRIABLE MATERIAL REMOVALS IN ACCORDANCE WITH SECTION 028213-1.06.
		--	DOUBLE FIRE DOOR INSULATION	2 UNITS	INT/EXT FRIABLE	NEGATIVE PRESSURE TENT ENCLOSURE OR INTACT REMOVAL WITH VARIANCE	12 NYCRR PART 56 7.11 (c) OR 7.11(f)	CONTRACTOR HAS THE OPTION TO APPLY FOR A NYSDOL SITE SPECIFIC VARIANCE TO ALLOW FOR "INTACT" COMPONENT REMOVAL FOR INTERIOR FRIABLE MATERIAL REMOVALS IN ACCORDANCE WITH SECTION 028213-1.06.
		--	DOOR FRAME CAULK	60 LF	EXTERIOR NON-FRIABLE	REGULATED ASBESTOS WORK AREA	12 NYCRR PART 56 11.6	CONTRACTOR TO ASSUME THAT EACH EXTERIOR DOOR CONTAINS 20 LF OF MULTI-LAYERED DOOR FRAME CAULK.
		--	DOOR LINTEL CAULK	12 LF	EXTERIOR NON-FRIABLE	REGULATED ASBESTOS WORK AREA	12 NYCRR PART 56 11.6	CONTRACTOR TO ASSUME THAT EACH EXTERIOR DOOR CONTAINS 4 LF OF MULTI-LAYED LINTEL CAULK.
		--	ELECTRICAL WIRE INSULATION	500 LF	INTERIOR FRIABLE	NEGATIVE PRESSURE TENT ENCLOSURE	12 NYCRR PART 56 7.11 (c) OR 7.11(f)	WIRING IS LOCATED THROUGHOUT THE BASEMENT AREA ASSOCIATED WITH ELECTRICAL PANEL, FEEDERS, BRANCH CIRCUITS AND RECEPTACLES.
		--	TRANSITE PIPE	40 LF	INTERIOR NON-FRIABLE	NEGATIVE PRESSURE TENT ENCLOSURE OR INTACT WRAP AND CUT REMOVAL	12 NYCRR PART 56 7.11(f) OR 11.8	CONTRACTOR HAS THE OPTION TO REMOVE TRANSITE PIPING IN A NEGATIVE TENT ENCLOSURE OR UTILZE THE WRAP AND CUT METHOD.
WA-5	BASEMENT BUILDING AREA - CENTER CORE	HA-20, 101 & 119[1]	FIRE DOOR INSULATION	3 UNITS	INT/EXT FRIABLE	NEGATIVE PRESSURE TENT ENCLOSURE OR INTACT REMOVAL WITH VARIANCE	12 NYCRR PART 56 7.11 (c) OR 7.11(f)	CONTRACTOR HAS THE OPTION TO APPLY FOR A NYSDOL SITE SPECIFIC VARIANCE TO ALLOW FOR "INTACT" COMPONENT REMOVAL FOR INTERIOR FRIABLE MATERIAL REMOVALS IN ACCORDANCE WITH SECTION 028213-1.06.
		--	DOUBLE FIRE DOOR INSULATION	4 UNITS	INT/EXT FRIABLE	NEGATIVE PRESSURE TENT ENCLOSURE OR INTACT REMOVAL WITH VARIANCE	12 NYCRR PART 56 7.11 (c) OR 7.11(f)	CONTRACTOR HAS THE OPTION TO APPLY FOR A NYSDOL SITE SPECIFIC VARIANCE TO ALLOW FOR "INTACT" COMPONENT REMOVAL FOR INTERIOR FRIABLE MATERIAL REMOVALS IN ACCORDANCE WITH SECTION 028213-1.06.
		--	DOOR FRAME CAULK	60 LF	EXTERIOR NON-FRIABLE	REGULATED ASBESTOS WORK AREA	12 NYCRR PART 56 11.6	CONTRACTOR TO ASSUME THAT EACH EXTERIOR DOOR CONTAINS 20 LF OF MULTI-LAYERED DOOR FRAME CAULK.
		--	DOOR LINTEL CAULK	12 LF	EXTERIOR NON-FRIABLE	REGULATED ASBESTOS WORK AREA	12 NYCRR PART 56 11.6	CONTRACTOR TO ASSUME THAT EACH EXTERIOR DOOR CONTAINS 4 LF OF MULTI-LAYED LINTEL CAULK.
		--	WINDOW GLAZING	9 UNITS	INTERIOR FRIABLE	NEGATIVE PRESSURE TENT ENCLOSURE OR INTACT REMOVAL WITH VARIANCE	12 NYCRR PART 56 7.11 (c) OR 7.11(f)	CONTRACTOR TO ASSUME A MASONRY OPENING OF 22 LF PER WINDOW AND THAT EACH WINDOW CONTAINS 30 PANES OF GLASS AND 3 LF OF GLAZING PER PANE.
		--	PIPE INSULATION AND ASSOCIATED FITTINGS	484 SF	INTERIOR FRIABLE	FULL CONTAINMENT	12 NYCRR PART 56 7.11	PIPE INSULATION AND FITTINGS ARE ASSOCIATED WITH SUPPLY AND RETURN PIPING TO RADIATORS. CONTRACTOR TO ASSUME 24 LF OF PIPE INSULATION AND ASSOCIATED FITTINGS PLUS AN ADDITIONAL 20 LF FOR A CONDENSATION LOOP PER RADIATOR.
		--	ELECTRICAL WIRE INSULATION	1,000 LF	INTERIOR FRIABLE	NEGATIVE PRESSURE TENT ENCLOSURE	12 NYCRR PART 56 7.11 (c) OR 7.11(f)	WIRING IS LOCATED THROUGHOUT THE BASEMENT AREA ASSOCIATED WITH ELECTRICAL PANEL, FEEDERS, BRANCH CIRCUITS AND RECEPTACLES.
WA-6	BASEMENT BUILDING AREA - B-WING	HA-20, 101 & 119[1]	FIRE DOOR INSULATION	5 UNITS	INT/EXT FRIABLE	NEGATIVE PRESSURE TENT ENCLOSURE OR INTACT REMOVAL WITH VARIANCE	12 NYCRR PART 56 7.11 (c) OR 7.11(f)	CONTRACTOR HAS THE OPTION TO APPLY FOR A NYSDOL SITE SPECIFIC VARIANCE TO ALLOW FOR "INTACT" COMPONENT REMOVAL FOR INTERIOR FRIABLE MATERIAL REMOVALS IN ACCORDANCE WITH SECTION 028213-1.06.
		--	DOUBLE FIRE DOOR INSULATION	1 UNIT	INT/EXT FRIABLE	NEGATIVE PRESSURE TENT ENCLOSURE OR INTACT REMOVAL WITH VARIANCE	12 NYCRR PART 56 7.11 (c) OR 7.11(f)	CONTRACTOR HAS THE OPTION TO APPLY FOR A NYSDOL SITE SPECIFIC VARIANCE TO ALLOW FOR "INTACT" COMPONENT REMOVAL FOR INTERIOR FRIABLE MATERIAL REMOVALS IN ACCORDANCE WITH SECTION 028213-1.06.
		--	DOOR FRAME CAULK	60 LF	EXTERIOR NON-FRIABLE	REGULATED ASBESTOS WORK AREA	12 NYCRR PART 56 11.6	CONTRACTOR TO ASSUME THAT EACH EXTERIOR DOOR CONTAINS 20 LF OF MULTI-LAYERED DOOR FRAME CAULK.
		--	DOOR LINTEL CAULK	12 LF	EXTERIOR NON-FRIABLE	REGULATED ASBESTOS WORK AREA	12 NYCRR PART 56 11.6	CONTRACTOR TO ASSUME THAT EACH EXTERIOR DOOR CONTAINS 4 LF OF MULTI-LAYED LINTEL CAULK.
		--	ELECTRICAL WIRE INSULATION	1,000 LF	INTERIOR FRIABLE	NEGATIVE PRESSURE TENT ENCLOSURE	12 NYCRR PART 56 7.11 (c) OR 7.11(f)	WIRING IS LOCATED THROUGHOUT THE BASEMENT AREA ASSOCIATED WITH ELECTRICAL PANEL, FEEDERS, BRANCH CIRCUITS AND RECEPTACLES.
WA-7	BASEMENT BUILDING AREA - B WING ELECTRICAL PANEL AREA	--	ELECTRICAL WIRE INSULATION	100 LF	INTERIOR FRIABLE	NEGATIVE PRESSURE TENT ENCLOSURE	12 NYCRR PART 56 7.11 (c) OR 7.11(f)	WIRING IS LOCATED THROUGHOUT THE BASEMENT AREA ASSOCIATED WITH ELECTRICAL PANEL, FEEDERS, BRANCH CIRCUITS AND RECEPTACLES.
		--	ELECTRICAL PANELS	10 SF	INTERIOR NON-FRIABLE	NEGATIVE PRESSURE TENT ENCLOSURE OR INTACT REMOVAL WITH VARIANCE	12 NYCRR PART 56 7.11 (c) OR 7.11(f)	CONTRACTOR HAS THE OPTION TO APPLY FOR A NYSDOL SITE SPECIFIC VARIANCE TO ALLOW FOR "INTACT" COMPONENT REMOVAL FOR INTERIOR NON-FRIABLE MATERIAL REMOVALS IN ACCORDANCE WITH SECTION 028213-1.06.
WA-8	BASEMENT BUILDING AREA - B WING ELECTRICAL ROOM	--	ELECTRICAL WIRE INSULATION	2,500 LF	INTERIOR FRIABLE	NEGATIVE PRESSURE TENT ENCLOSURE	12 NYCRR PART 56 7.11 (c) OR 7.11(f)	WIRING IS LOCATED THROUGHOUT THE BASEMENT AREA ASSOCIATED WITH ELECTRICAL PANEL, FEEDERS, BRANCH CIRCUITS AND RECEPTACLES.
		--	ELECTRICAL PANELS	1,000 SF	INTERIOR NON-FRIABLE	NEGATIVE PRESSURE TENT ENCLOSURE OR INTACT REMOVAL WITH VARIANCE	12 NYCRR PART 56 7.11 (c) OR 7.11(f)	CONTRACTOR HAS THE OPTION TO APPLY FOR A NYSDOL SITE SPECIFIC VARIANCE TO ALLOW FOR "INTACT" COMPONENT REMOVAL FOR INTERIOR NON-FRIABLE MATERIAL REMOVALS IN ACCORDANCE WITH SECTION 028213-1.06.
WA-9	BASEMENT BUILDING AREA - ELECTRICAL ROOM	--	ELECTRICAL PANELS	10 SF	INTERIOR NON-FRIABLE	NEGATIVE PRESSURE TENT ENCLOSURE OR INTACT REMOVAL WITH VARIANCE	12 NYCRR PART 56 7.11 (c) OR 7.11(f)	CONTRACTOR TO REMOVE ELECTRICAL PANELS AS PER ELECTRICAL DRAWINGS.
		--	ELECTRICAL WIRE INSULATION	100 LF	INTERIOR FRIABLE	NEGATIVE PRESSURE TENT ENCLOSURE	12 NYCRR PART 56 7.11 (c) OR 7.11(f)	WIRING IS LOCATED THROUGHOUT THE BASEMENT AREA ASSOCIATED WITH ELECTRICAL PANEL, FEEDERS, BRANCH CIRCUITS AND RECEPTACLES.
WA-10	BASEMENT BUILDING AREA - ELECTRICAL PANEL CLOSET	--	ELECTRICAL PANELS	10 SF	INTERIOR NON-FRIABLE	NEGATIVE PRESSURE TENT ENCLOSURE OR INTACT REMOVAL WITH VARIANCE	12 NYCRR PART 56 7.11 (c) OR 7.11(f)	CONTRACTOR TO REMOVE ELECTRICAL PANELS AS PER ELECTRICAL DRAWINGS.
		--	ELECTRICAL WIRE INSULATION	100 LF	INTERIOR FRIABLE	NEGATIVE PRESSURE TENT ENCLOSURE	12 NYCRR PART 56 7.11 (c) OR 7.11(f)	WIRING IS LOCATED THROUGHOUT THE BASEMENT AREA ASSOCIATED WITH ELECTRICAL PANEL, FEEDERS, BRANCH CIRCUITS AND RECEPTACLES.
WA-11	BASEMENT BUILDING AREA - ELECTRICAL PANEL CLOSET	--	ELECTRICAL PANELS	10 SF	INTERIOR NON-FRIABLE	NEGATIVE PRESSURE TENT ENCLOSURE OR INTACT REMOVAL WITH VARIANCE	12 NYCRR PART 56 7.11 (c) OR 7.11(f)	CONTRACTOR TO REMOVE ELECTRICAL PANELS AS PER ELECTRICAL DRAWINGS.
		--	ELECTRICAL WIRE INSULATION	100 LF	INTERIOR FRIABLE	NEGATIVE PRESSURE TENT ENCLOSURE	12 NYCRR PART 56 7.11 (c) OR 7.11(f)	WIRING IS LOCATED THROUGHOUT THE BASEMENT AREA ASSOCIATED WITH ELECTRICAL PANEL, FEEDERS, BRANCH CIRCUITS AND RECEPTACLES.
			SUB-TOTAL	5,656 LF / 1,524 SF / 27 UNITS				

TABLE NOTES: [1] - Based on Matrix Survey Report Dated May 2014

A8

A8

GENERAL NOTES:

1. THE CONTRACT DRAWINGS AND SPECIFICATIONS HAVE BEEN PREPARED FOR THE PURPOSE OF REPRESENTING THE SCOPE OF WORK AS IDENTIFIED IN MATRIX'S SUPPLEMENTAL HAZARDOUS MATERIALS SURVEY REPORT.
2. DRAWINGS ARE DIAGRAMATIC ONLY AND DO NOT REPRESENT LIKELY CONDITIONS TO BE FOUND ONSITE. IT IS THE CONTRACTORS RESPONSIBILITY TO DETERMINE EXISTING BUILDING AND JOB SITE CONDITIONS.
3. THE ABATEMENT CONTRACTOR IS REQUIRED TO PROVIDE A DETAILED ASBESTOS ABATEMENT WORK PLAN IN ACCORDANCE WITH SECTION 028213-1.08 (C) PRIOR TO MOBILIZATION.
4. THE CONTRACTOR HAS THE OPTION TO APPLY FOR AND UTILIZE ALTERNATIVE ABATEMENT METHODS THAT MAY REQUIRE A SITE SPECIFIC VARIANCE APPLICATION AND APPROVAL FROM THE NEW YORK STATE DEPARTMENT OF LABOR (NYSDOL). IF A SITE SPECIFIC VARIANCE IS SOUGHT, THE APPLICATION SHALL BE REVIEWED AND ACCEPTED BY THE OWNERS ENVIRONMENTAL CONSULTANT AND THEN MUST BE SUBMITTED BY THE CONTRACTOR'S NYSDOL CERTIFIED ASBESTOS PROJECT DESIGNER IN ACCORDANCE WITH SECTION 028213-1.06.
5. PRIOR TO REGULATED ABATEMENT WORK AREA PREPARATION, THE ASBESTOS CONTRACTOR SHALL COORDINATE WITH THE GENERAL CONTRACTOR, BUILDING OWNER AND FACILITY PERSONNEL REGARDING ANY AND ALL SECURITY AND EGRESS ISSUES THAT MAY APPLY TO THE OVERALL PROTECTION AND SAFETY OF THE BUILDING AND OCCUPANTS
6. THIS PROJECT WILL BE SUBJECT TO THE OPERATING HOURS OF THE FACILITY OR OTHER OPERATING HOURS AS OTHERWISE APPROVED BY THE OWNER.
7. THE OWNER AND OWNER'S REPRESENTATIVES HAVE THE AUTHORITY TO STOP THE WORK AT ANY TIME IF WORK IS NOT CONDUCTED IN ACCORDANCE WITH THE SPECIFICATIONS AND APPLICABLE REGULATIONS. THE STOPPAGE OF WORK SHALL CONTINUE UNTIL CONDITIONS HAVE BEEN CORRECTED TO THE SATISFACTION OF THE OWNER AND OWNER'S REPRESENTATIVES. STANDBY TIME TO RESOLVE PROBLEMS SHALL BE AT THE CONTRACTOR'S EXPENSE.

HAZARDOUS MATERIAL NOTE:

1. LEAD-BASED PAINT (LBP) AND OTHER POTENTIALLY HAZARDOUS MATERIALS WERE IDENTIFIED DURING THE SURVEY CONDUCTED BY MATRIX NEW WORLD ENGINEERING, INC. (MATRIX). THE CONTRACTOR SHALL REFER TO THE, "HAZARDOUS MATERIAL BUILDING SURVEY REPORT," REVISED JANUARY 2015 AND PREPARED BY MATRIX (MATRIX REPORT) FOR SPECIFIC LOCATIONS AND COMPONENTS IMPACTED BY THE PROPOSED SCOPE OF WORK.
2. CONTRACTOR IS TO ASSUME ANY PAINTED SURFACE NOT IDENTIFIED IN THE MATRIX REPORT IS LBP AND SHALL TREAT IT IN ACCORDNACE WITH SPECIFICATION 028307 - HANDELING OF LEAD CONTAINING MATERIALS.

REVISED DRAWING 09/24/2015

NEW YORK STATE OF OPPORTUNITY. Office of General Services

DESIGN & CONSTRUCTION

CONSULTANTS:

RBSD ARCHITECTS P.C. | STV 100 Years

A Joint Venture

225 Park Avenue South
New York, New York 10003

MATRIX NEW WORLD
Engineering Progress

Matrix New World Engineering, Inc.
26 Columbia Turnpike Tel: 973-240-1800
Florham Park, New Jersey 07932 Fax: 973-240-1818
WBE / DBE / SBE www.matrixneworld.com

WARNING:
THE ALTERATION OF THIS MATERIAL IN ANY WAY, UNLESS DONE UNDER THE DIRECTION OF A COMPARABLE PROFESSIONAL, I.E. ARCHITECT FOR AN ARCHITECT, ENGINEER FOR AN ENGINEER OR LANDSCAPE ARCHITECT FOR A LANDSCAPE ARCHITECT, IS A VIOLATION OF THE NEW YORK STATE EDUCATION LAW AND/OR REGULATIONS AND IS A CLASS 'A' MISDEMEANOR.

US EPA/NY STATE — ERIC GRATSON, CHMM — CERT NO. 93-14575 — CERTIFIED ASBESTOS PROJECT DESIGNER

CONTRACT: CONSTRUCTION

TITLE: MAJOR BUILDING RENOVATIONS FOR THE MANHATTAN FORENSIC RELOCATION

LOCATION: MANHATTAN PSYCHIATRIC CENTER, BUILDING No. 102
600 EAST 125TH STREET WARDS ISLAND, NY 10035

CLIENT: NYS OFFICE OF MENTAL HEALTH

MARK	DATE	DESCRIPTION
A8	09/24/2014	ADDENDUM #8
	6-15-2015	BID DOCUMENT

PROJECT NUMBER: 44578
DESIGNED BY: DW
DRAWN BY: SH
FIELD CHECK: DW / EG
APPROVED: EG

SHEET TITLE: HAZARDOUS MATERIAL GENERAL NOTES AND TABLE BASEMENT PLAN

BUILDING NUMBER: 102

DRAWING NUMBER: H-100-1A

SHEET

LEGEND

	SCOPE OF WORK BOUNDARY.
WA-	WORK AREA IDENTIFICATION.
	ASBESTOS-CONTAINING FIRE DOOR.
	ACM PIPE INSULATION AND FITTINGS.
	WINDOW
1	REMOVE ASBESTOS-CONTAINING FIRE DOORS IN ACCORDANCE WITH 12 NYCRR PART 56 AND THE PROJECT SPECIFICATIONS.
2	REMOVE ASBESTOS-CONTAINING EXTERIOR DOOR FRAME CAULK IN ACCORDANCE WITH 12 NYCRR PART 56 AND THE PROJECT SPECIFICATIONS.
3	REMOVE ASBESTOS-CONTAINING EXTERIOR DOOR LINTEL CAULK IN ACCORDANCE WITH 12 NYCRR PART 56 AND THE PROJECT SPECIFICATIONS.
4	REMOVE ASBESTOS-CONTAINING ELECTRICAL WIRE INSULATION IN ACCORDANCE WITH 12 NYCRR PART 56 AND THE PROJECT SPECIFICATIONS.
5	REMOVE ASBESTOS-CONTAINING ELECTRICAL PANELS IN ACCORDANCE WITH 12 NYCRR PART 56 AND THE PROJECT SPECIFICATIONS.
6	REMOVE ASBESTOS-CONTAINING ROOFING MATERIAL IN ACCORDANCE WITH 12 NYCRR PART 56 AND THE PROJECT SPECIFICATIONS.
7	REMOVE ASBESTOS CONTAINING EXTERIOR WINDOW CAULK IN ACCORDANCE WITH 12 NYCRR PART 56 AND THE PROJECT SPECIFICATIONS.
8	REMOVE ABESTOS CONTAINING PIPE DOPE IN ACCORDANCE WITH 12 NYCRR PART 56 AND THE PROJECT SPECIFICATIONS.
9	REMOVE ABESTOS CONTAINING TRANSITE PIPING IN ACCORDANCE WITH 12 NYCRR PART 56 AND THE PROJECT SPECIFICATIONS.
10	REMOVE ASBESTOS-CONTAINING WINDOW GLAZING IN ACCORDANCE WITH 12 NYCRR PART 56 AND THE PROJECT SPECIFICATIONS.
11	REMOVE ASBESTOS-CONTAINING PIPE INSULATION AND ASSOCIATED FITTINGS IN ACCORDANCE WITH 12 NYCRR PART 56 AND THE PROJECT SPECIFICATIONS.

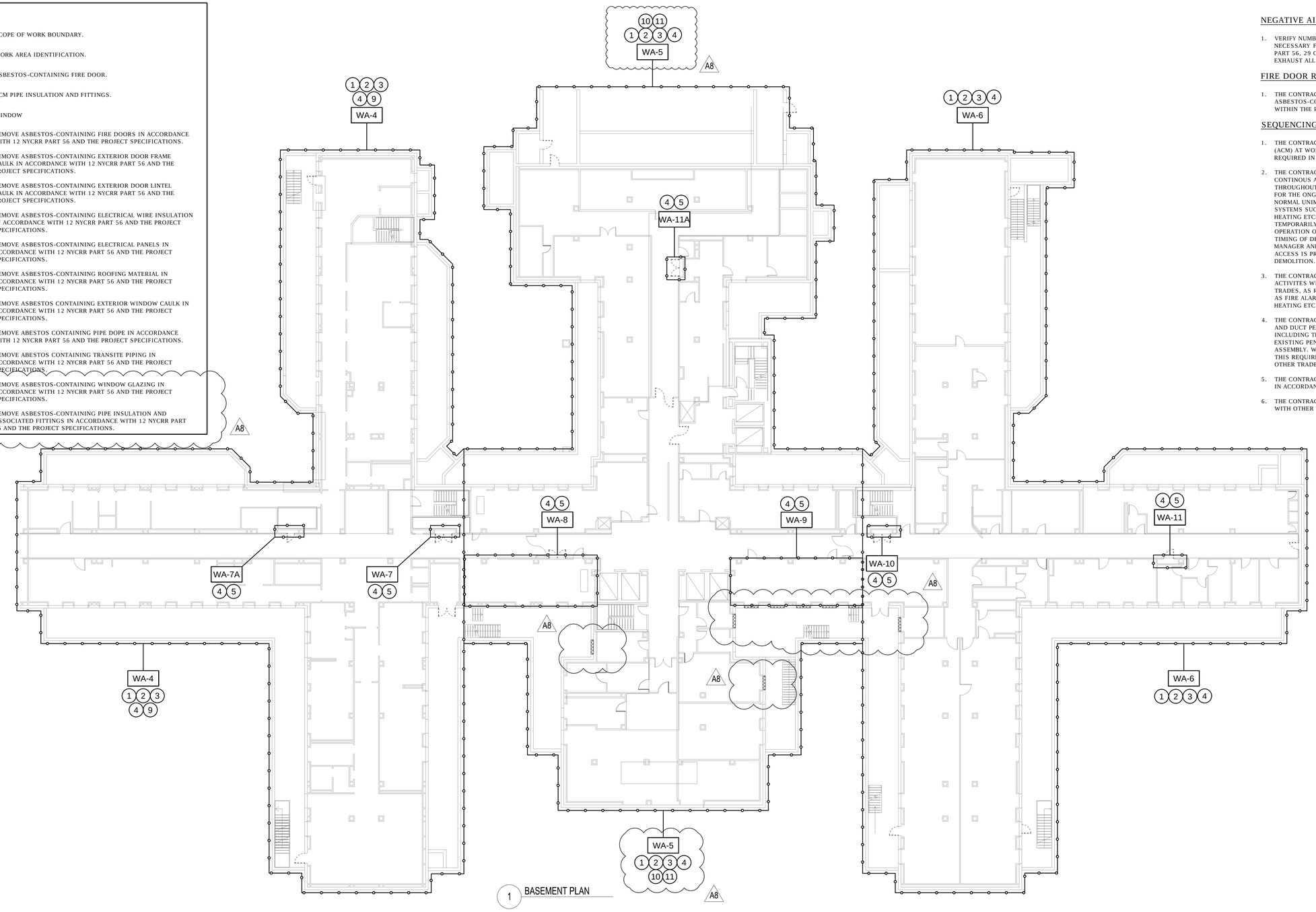

1 BASEMENT PLAN

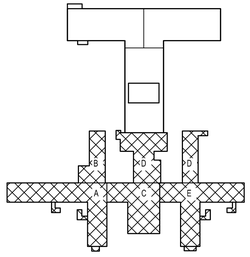

PROJECT NORTH

0 8' 16' 32'

NEGATIVE AIR UNIT NOTES:

1. VERIFY NUMBER AND LOCATION OF NEGATIVE AIR FILTRATION DEVICES NECESSARY FOR EACH WORK AREA IN ACCORDANCE WITH 12 NYCRR PART 56, 29 CFR 1926.1101 AND THE PROJECT SPECIFICATIONS. EXHAUST ALL NEGATIVE AIR UNITS TO THE EXTERIOR OF THE BUILDING.

FIRE DOOR REMOVAL NOTES:

1. THE CONTRACTOR SHALL VERIFY ALL LOCATIONS WHERE ASBESTOS-CONTAINING FIRE DOORS ARE SCHEDULED TO BE REMOVED WITHIN THE PROJECT SCOPE OF WORK LIMITS.

SEQUENCING NOTES:

1. THE CONTRACTOR SHALL REMOVE ASBESTOS-CONTAINING MATERIAL (ACM) AT WORK AREAS WHERE MULTIPLE ABATEMENT ACTIVITIES ARE REQUIRED IN ACCORDANCE WITH 12 NYCRR PART 56-8.6.
2. THE CONTRACTOR SHALL BE RESPONSIBLE FOR MAINTAINING CONTINOUS ACCESS TO ALL CORRIDORS ON THE BASEMENT LEVEL THROUGHOUT THE DURATION OF DEMOLITION/ABATEMENT ACTIVITIES, FOR THE ONGOING USE OF THE FACILITY STAFF AS REQUIRED FOR THE NORMAL UNIMPEDED OPERATION OF THE FACILITY. BASE BUILDING SYSTEMS SUCH AS FIRE ALARMS, SPRINKLERS, LIGHTING, VENTILATION, HEATING ETCETERA SHALL BE TEMPORARILY RELOCATED OR TEMPORARILY SUBLEMENTED AS REQUIRED TO MAINTAIN CONTINOUS OPERATION OF ALL CORRIDORS. COORDINATE THE PHASING AND TIMING OF DEMOLITION ACTIVITIES WITH THE CONSTRUCTION MANAGER AND FACILITY PERSONNEL AND ENSURE THAT SUFFCIENT ACCESS IS PROVIDED FOR FACILITY PERSONNEL THROUGHOUT THE DEMOLITION.
3. THE CONTRACTOR SHALL COORDINATE DEMOLITION/ABATEMENT ACTIVITES WITH THE FACILITY, THE GENERAL CONTRACTOR AND OTHER TRADES, AS REQUIRED, TO MAINTAIN BASE BUILDING SYSTEMS SUCH AS FIRE ALARMS, SPRINKLERS, LIGHTING, ELECTRICAL VENTILATION, HEATING ETC.
4. THE CONTRACTOR SHALL BE RESPONSIBLE FOR FIRESTOPPING ALL PIPE AND DUCT PENERATIONS RESULTING FROM ABATEMENT ACTIVITIES, INCLUDING THOSE FROM MOUNTINGS, HANGERS, AND ANY OTHER EXISTING PENETRATIONS WITH A TWO-HOUR RATED UL-APPROVED ASSEMBLY. WALLS SCHEDULED FOR DEMOLITION ARE EXEMPT FROM THIS REQUIREMENT. CONTACTOR TO COORDINATE FIRESTOOPING WITH OTHER TRADES.
5. THE CONTRACTOR SHALL COORDINATE REMOVAL OF ELECTRICAL PANELS IN ACCORDANCE WITH THE ELECTRICAL DRAWINGS.
6. THE CONTRACTOR SHALL COORDINATE ROOFING ABATEMENT WORK WITH OTHER TRADES, AS NECESSARY.

REVISED DRAWING 09/24/2015

NEW YORK STATE OF OPPORTUNITY. Office of General Services

DESIGN & CONSTRUCTION

CONSULTANTS:

RBSD ARCHITECTS P.C. | STV 100 years

A Joint Venture

225 Park Avenue South
New York, New York 10003

MATRIXNEWORLD Engineering Progress

Matrix New World Engineering, Inc.
26 Columbia Turnpike Tel: 973-240-1800
Florham Park, New Jersey 07932 Fax: 973-240-1818
WBE / DBE / SBE www.matrixneworld.com

WARNING:

THE ALTERATION OF THIS MATERIAL IN ANY WAY, UNLESS DONE UNDER THE DIRECTION OF A COMPARABLE PROFESSIONAL, I.E. ARCHITECT FOR AN ARCHITECT, ENGINEER FOR AN ENGINEER OR LANDSCAPE ARCHITECT FOR A LANDSCAPE ARCHITECT, IS A VIOLATION OF THE NEW YORK STATE EDUCATION LAW AND/OR REGULATIONS AND IS A CLASS 'A' MISDEMEANOR.

NYS EPA/NY STATE ASBESTOS PROJECT DESIGNER CERTIFIED CERT NO. 93-1806

CONTRACT: CONSTRUCTION

TITLE: MAJOR BUILDING RENOVATIONS FOR THE MANHATTAN FORENSIC RELOCATION

LOCATION: MANHATTAN PSYCHIATRIC CENTER, BUILDING No. 102
600 EAST 125TH STREET WARDS ISLAND, NY 10035

CLIENT: NYS OFFICE OF MENTAL HEALTH

MARK	DATE	DESCRIPTION
A8	09/24/2014	ADDENDUM #8
	6-15-2015	BID DOCUMENT

PROJECT NUMBER:	44578
DESIGNED BY:	DW
DRAWN BY:	SH
FIELD CHECK:	DW / EG
APPROVED:	EG

SHEET TITLE:

HAZARDOUS MATERIAL ABATEMENT BASEMENT PLAN

BUILDING NUMBER:	DRAWING NUMBER:
102	H-100-1B

SHEET

GENERAL SHEET NOTES

1. FOR LEGEND AND ABBREVIATIONS REFER TO SHEET M-001 AND M-002.
2. PLENUM SIZES FOR LINEAR DIFFUSERS VARIES & DEPENDS ON DUCTWORK LAYOUT & COORDINATION IN FIELD.
3. PROVIDE BALANCING DAMPER ON EVERY BRANCHTAKE OFF FOR EXHAUST, RETURN AND SUPPLY DUCTWORK.

KEY NOTES

1. PROVIDE FLEXIBLE CONNECTION FOR DUCTWORK, MINIMUM 3" INSTALLED LENGTH AND 6" NOMINAL LENGTH WITH MATERIAL TAUT, AT EACH POINT WHERE DUCTWORK CROSSES A BUILDING EXPANSION JOINT. COORDINATE WITH ARCHITECTURAL AND STRUCTURAL DRAWINGS FOR EXPANSION JOINT SIZES LOCATIONS.
2. SLAB OPENING AT HORIZONTAL SHAFT ASSEMBLY. REFER TO DETAILS ON ARCHITECTURAL DRAWING A-823.

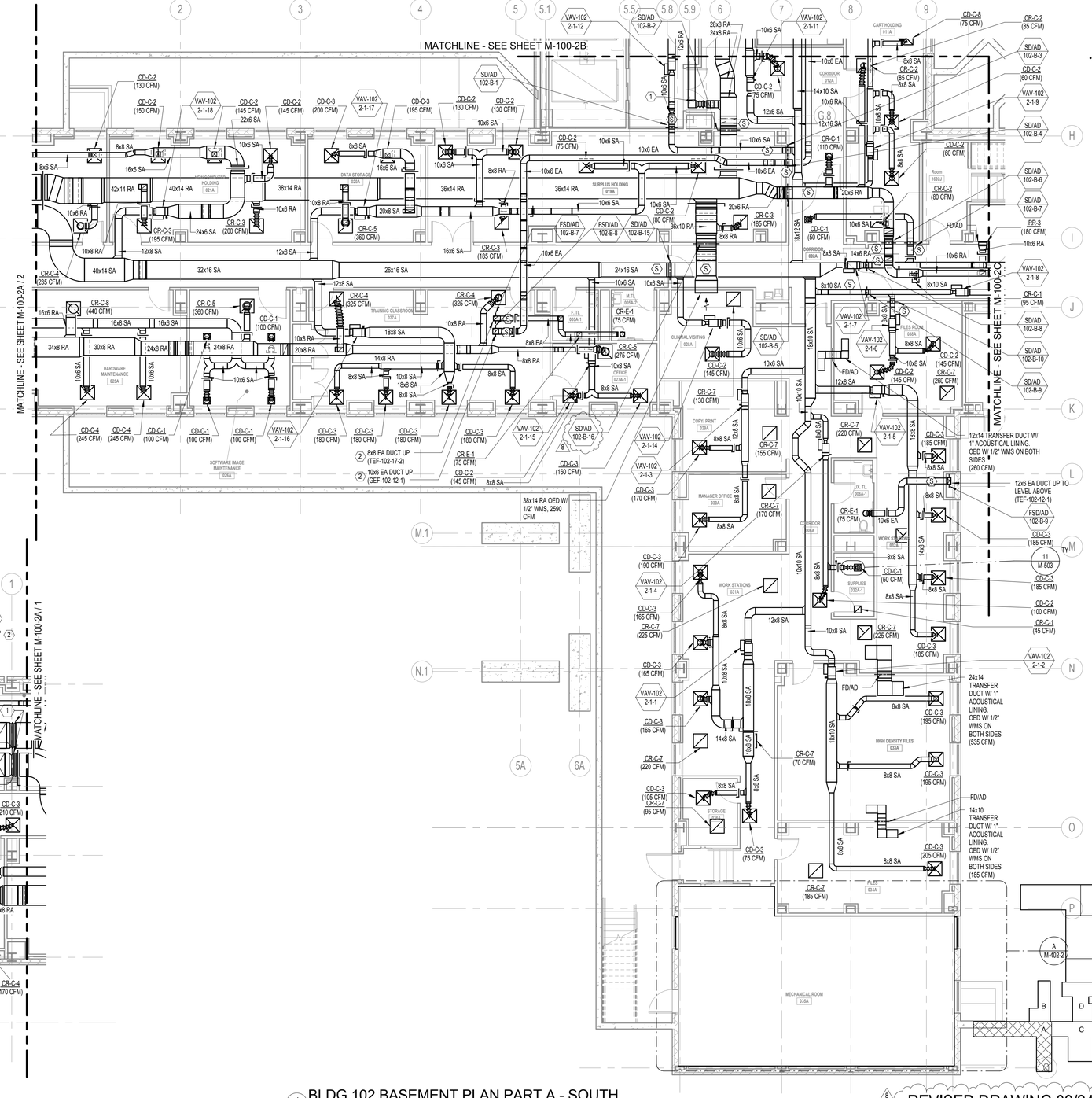

2 BLDG 102 BASEMENT PLAN PART A - NORTH
1/8" = 1'-0"

1 BLDG 102 BASEMENT PLAN PART A - SOUTH
1/8" = 1'-0"

8 REVISED DRAWING 09/24/2015

SCALE: As indicated

NEW YORK STATE OF OPPORTUNITY. Office of General Services

DESIGN & CONSTRUCTION

CONSULTANTS:

RBSD ARCHITECTS P.C. | STV 100 Years

A Joint Venture

225 Park Avenue South
New York, New York 10003

WARNING:
THE ALTERATION OF THIS MATERIAL IN ANY WAY, UNLESS DONE UNDER THE DIRECTION OF A COMPARABLE PROFESSIONAL, I.E. ARCHITECT FOR AN ARCHITECT, ENGINEER FOR AN ENGINEER OR LANDSCAPE ARCHITECT FOR A LANDSCAPE ARCHITECT, IS A VIOLATION OF THE NEW YORK STATE EDUCATION LAW AND/OR REGULATIONS AND IS A CLASS 'A' MISDEMEANOR.

CONTRACT: CONSTRUCTION

TITLE: MAJOR BUILDING RENOVATIONS FOR THE MANHATTAN FORENSIC RELOCATION

LOCATION: MANHATTAN PSYCHIATRIC CENTER, BUILDING No. 102
600 EAST 125TH STREET WARDS ISLAND, NY 10035

CLIENT: NYS OFFICE OF MENTAL HEALTH

MARK	DATE	DESCRIPTION
8	09/24/2015	ADDENDUM 8
5	8-12-2015	ADDENDUM 5
	6-15-2015	BID DOCUMENT

PROJECT NUMBER:	44578
DESIGNED BY:	IL
DRAWN BY:	FG
FIELD CHECK:	N/A
APPROVED:	PL

SHEET TITLE:

HVAC BASEMENT FLOOR PLAN, PART A

BUILDING NUMBER: 102

DRAWING NUMBER: M-100-2A

SHEET

9/22/2015 12:06:25 PM

GENERAL SHEET NOTES

1. FOR LEGEND AND ABBREVIATIONS REFER TO SHEET M-001 AND M-002.
2. PLENUM SIZES FOR LINEAR DIFFUSERS VARIES & DEPENDS ON DUCTWORK LAYOUT & COORDINATION IN FIELD.
3. PROVIDE BALANCING DAMPER ON EVERY BRANCH/TAKE OFF FOR EXHAUST, RETURN AND SUPPLY DUCTWORK.

KEY NOTES

1. PROVIDE FLEXIBLE CONNECTION FOR DUCTWORK, MINIMUM 3" INSTALLED LENGTH AND 6" NOMINAL LENGTH WITH MATERIAL TAUT, AT EACH POINT WHERE DUCTWORK CROSSES A BUILDING EXPANSION JOINT. COORDINATE WITH ARCHITECTURAL AND STRUCTURAL DRAWINGS FOR EXPANSION JOINT SIZES LOCATIONS.

2. EXISTING EQUIPMENT AND DUCTWORK SERVING EXISTING TV CONTROL ROOM & CORRIDOR 007B-1 TO REMAIN AS EXISTING.

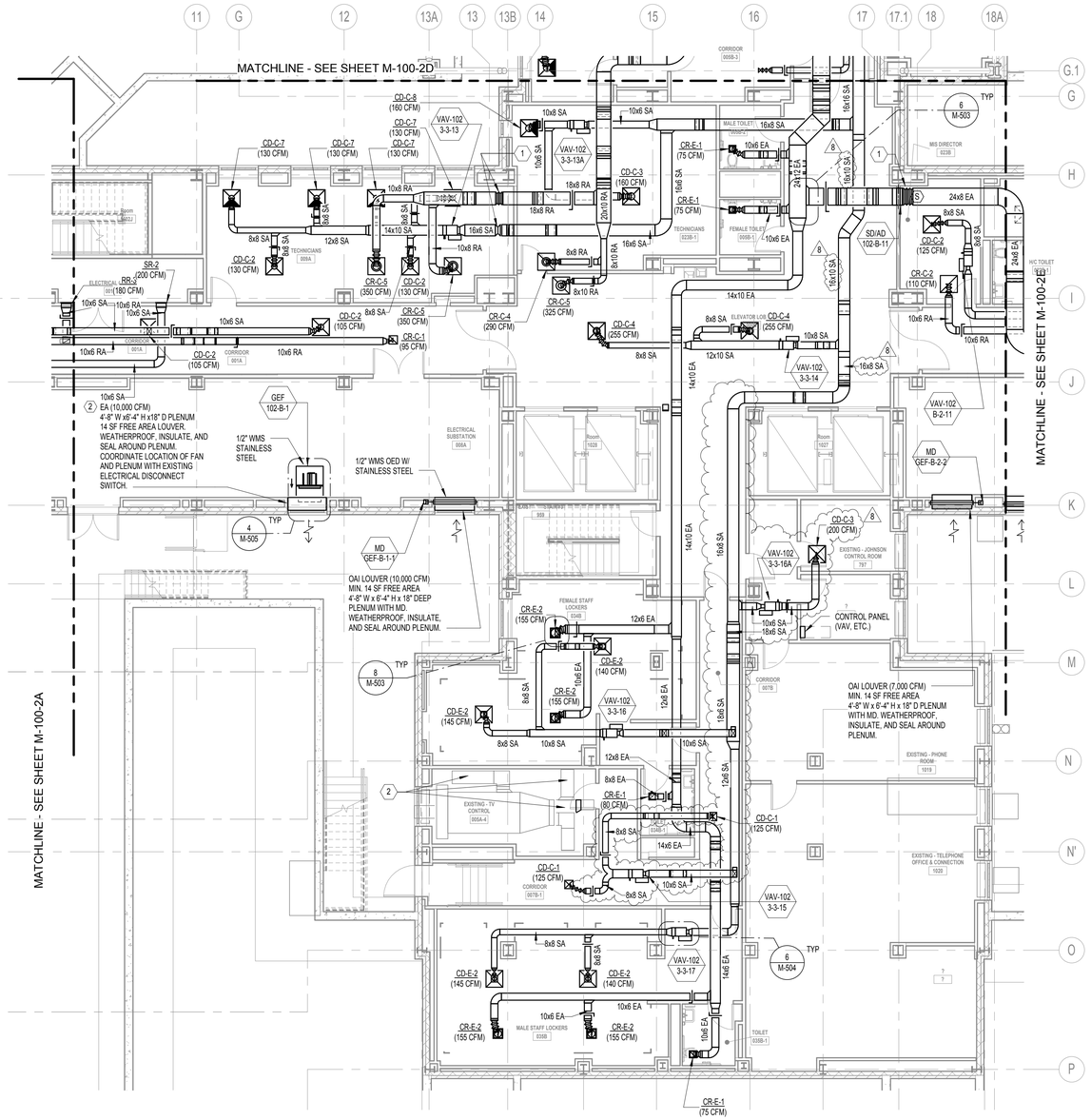

1 BLDG 102 BASEMENT PLAN PART C
1/8" = 1'-0"

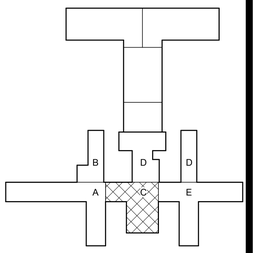

PROJECT NORTH

8 REVISED DRAWING 09/24/2015

0 4' 8' 16'
SCALE: As indicated

NEW YORK STATE OF OPPORTUNITY. Office of General Services

DESIGN & CONSTRUCTION

CONSULTANTS:

RBSD ARCHITECTS P.C. | STV 100 Years

A Joint Venture

225 Park Avenue South
New York, New York 10003

WARNING:
THE ALTERATION OF THIS MATERIAL IN ANY WAY, UNLESS DONE UNDER THE DIRECTION OF A COMPARABLE PROFESSIONAL, I.E. ARCHITECT FOR AN ARCHITECT, ENGINEER FOR AN ENGINEER OR LANDSCAPE ARCHITECT FOR A LANDSCAPE ARCHITECT, IS A VIOLATION OF THE NEW YORK STATE EDUCATION LAW AND/OR REGULATIONS AND IS A CLASS 'A' MISDEMEANOR.

CONTRACT:
CONSTRUCTION

TITLE:
MAJOR BUILDING RENOVATIONS FOR THE MANHATTAN FORENSIC RELOCATION

LOCATION: MANHATTAN PSYCHIATRIC CENTER, BUILDING No. 102
600 EAST 125TH STREET WARDS ISLAND, NY 10035

CLIENT:
NYS OFFICE OF MENTAL HEALTH

MARK	DATE	DESCRIPTION
8	09/24/2015	ADDENDUM 8
5	8-12-2015	ADDENDUM 5
	6-15-2015	BID DOCUMENT

PROJECT NUMBER:	44578
DESIGNED BY:	IL
DRAWN BY:	FG
FIELD CHECK:	N/A
APPROVED:	PL

SHEET TITLE:
HVAC BASEMENT FLOOR PLAN, PART C

BUILDING NUMBER: 102

DRAWING NUMBER: M-100-2C

SHEET

9/22/2015 12:06:30 PM

GENERAL SHEET NOTES

1. FOR LEGEND AND ABBREVIATIONS REFER TO SHEET M-001 AND M-002.
2. PLENUM SIZES FOR LINEAR DIFFUSERS VARIES & DEPENDS ON DUCTWORK LAYOUT & COORDINATION IN FIELD.
3. PROVIDE BALANCING DAMPER ON EVERY BRANCH/TAKE OFF FOR EXHAUST, RETURN AND SUPPLY DUCTWORK.

KEY NOTES

1. SLAB OPENING AT HORIZONTAL SHAFT ASSEMBLY. REFER TO DETAILS ON ARCHITECTURAL DRAWING A-823.

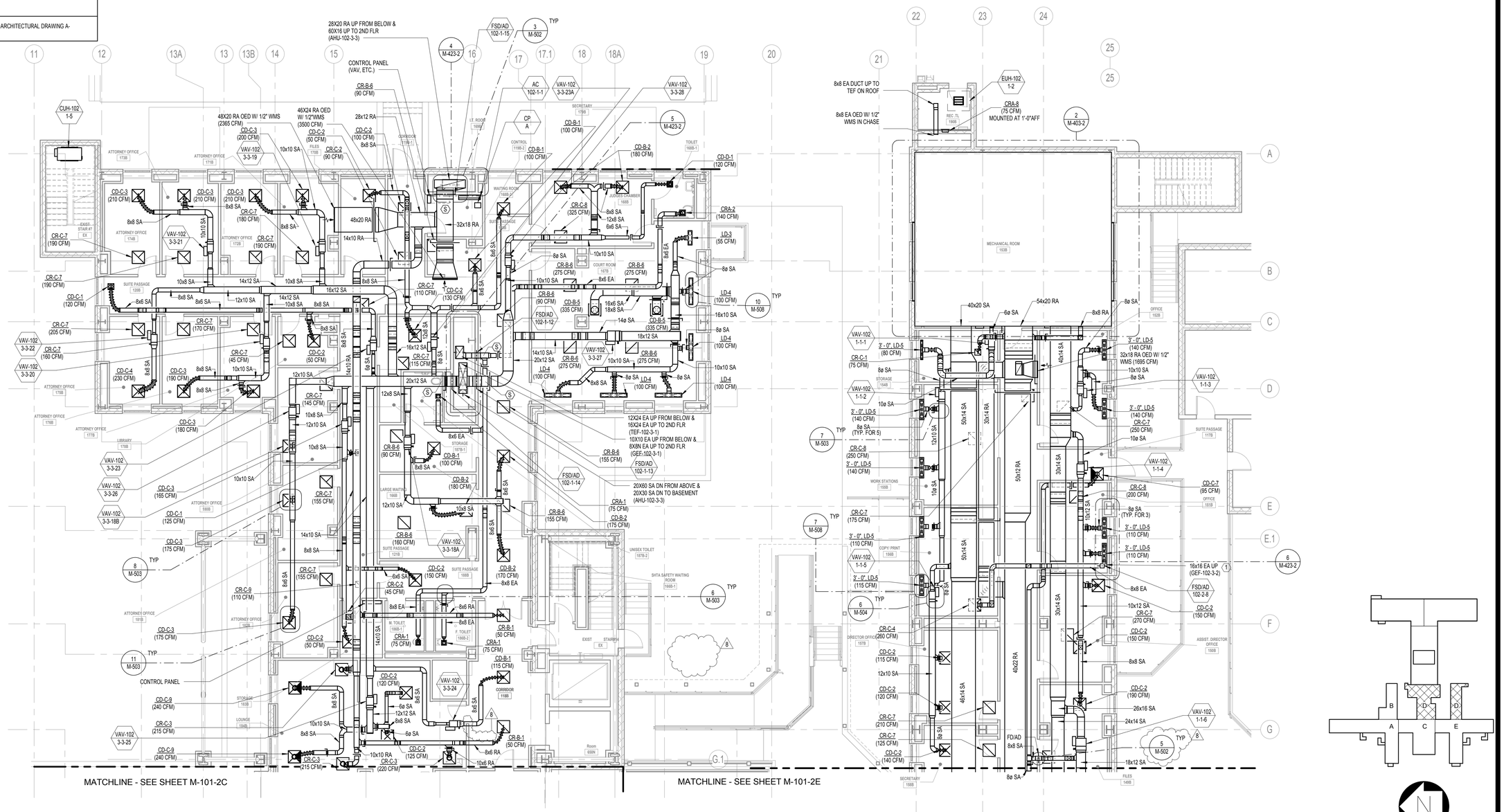

1 BLDG 102 1ST FLOOR PLAN PART D
1/8" = 1'-0"

8 REVISED DRAWING 09/24/2015

0 4' 8' 16'
SCALE: As indicated

NEW YORK STATE OF OPPORTUNITY. Office of General Services

DESIGN & CONSTRUCTION

CONSULTANTS:

RBSD ARCHITECTS P.C. | STV 100 Years

A Joint Venture
225 Park Avenue South
New York, New York 10003

WARNING:
THE ALTERATION OF THIS MATERIAL IN ANY WAY, UNLESS DONE UNDER THE DIRECTION OF A COMPARABLE PROFESSIONAL, I.E. ARCHITECT FOR AN ARCHITECT, ENGINEER FOR AN ENGINEER OR LANDSCAPE ARCHITECT FOR A LANDSCAPE ARCHITECT, IS A VIOLATION OF THE NEW YORK STATE EDUCATION LAW AND/OR REGULATIONS AND IS A CLASS 'A' MISDEMEANOR.

CONTRACT: CONSTRUCTION

TITLE: MAJOR BUILDING RENOVATIONS FOR THE MANHATTAN FORENSIC RELOCATION

LOCATION: MANHATTAN PSYCHIATRIC CENTER, BUILDING No. 102
600 EAST 125TH STREET WARDS ISLAND, NY 10035

CLIENT: NYS OFFICE OF MENTAL HEALTH

MARK	DATE	DESCRIPTION
8	09/24/2015	ADDENDUM 8
5	8-12-2015	ADDENDUM 5
	6-15-2015	BID DOCUMENT

PROJECT NUMBER:	44578
DESIGNED BY:	IL
DRAWN BY:	FG
FIELD CHECK:	N/A
APPROVED:	PL

SHEET TITLE:
HVAC FIRST FLOOR PLAN, PART D

BUILDING NUMBER: 102

DRAWING NUMBER: M-101-2D

SHEET

9/22/2015 12:06:37 PM

GENERAL SHEET NOTES

1. FOR LEGEND AND ABBREVIATIONS REFER TO SHEET M-001 AND M-002.
2. PLENUM SIZES FOR LINEAR DIFFUSERS VARIES & DEPENDS ON DUCTWORK LAYOUT & COORDINATION IN FIELD.
3. PROVIDE BALANCING DAMPER ON EVERY BRANCH/TAKE OFF FOR EXHAUST, RETURN AND SUPPLY DUCTWORK.

KEY NOTES

1. PROVIDE FLEXIBLE CONNECTION FOR DUCTWORK, MINIMUM 3" INSTALLED LENGTH AND 6" NOMINAL LENGTH WITH MATERIAL TAUT, AT EACH POINT WHERE DUCTWORK CROSSES A BUILDING EXPANSION JOINT. COORDINATE WITH ARCHITECTURAL AND STRUCTURAL DRAWINGS FOR EXPANSION JOINT SIZES LOCATIONS.
2. SLAB OPENING AT HORIZONTAL SHAFT ASSEMBLY. REFER TO DETAILS ON ARCHITECTURAL DRAWING A-823.

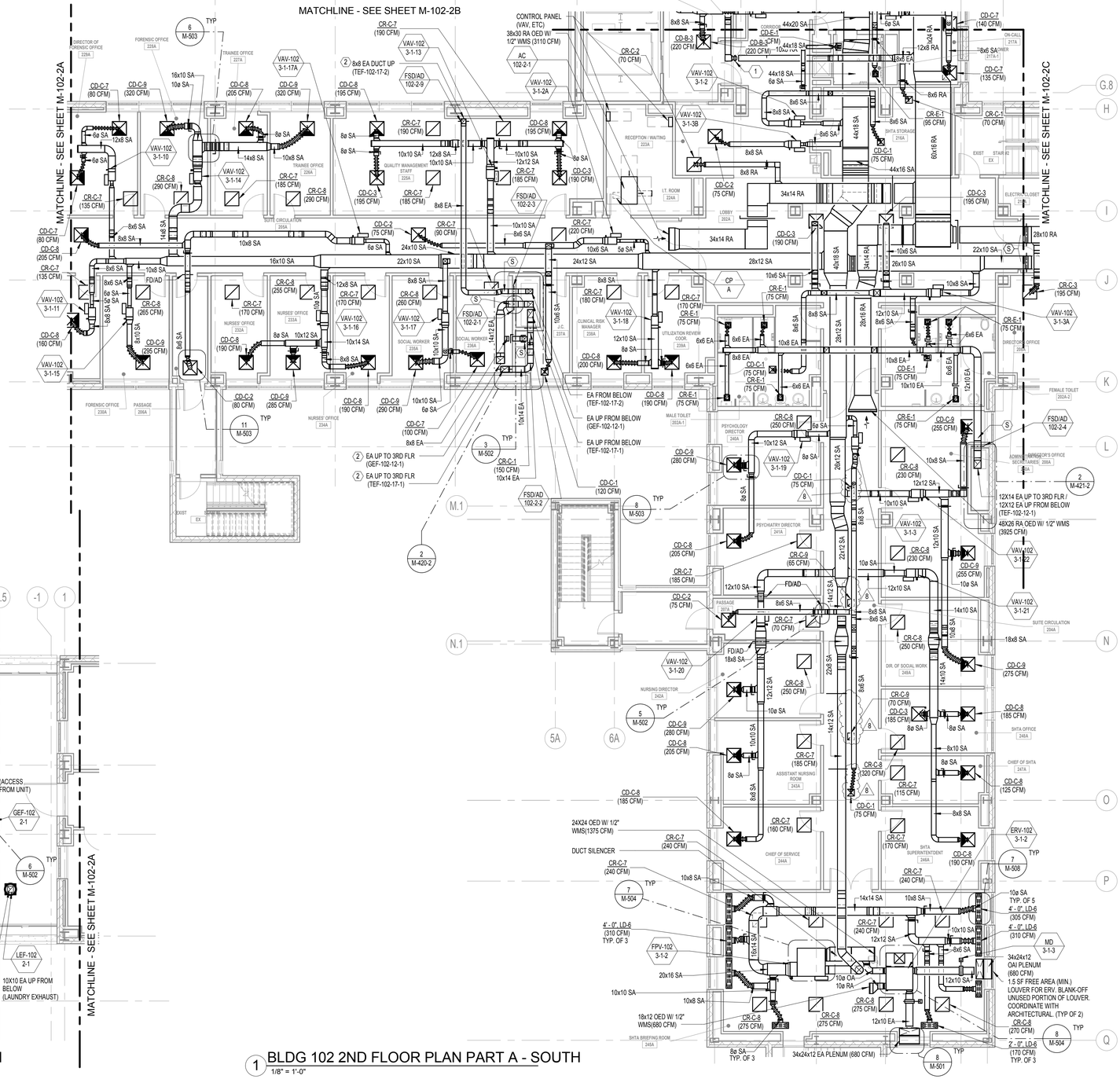

1 BLDG 102 2ND FLOOR PLAN PART A - SOUTH
1/8" = 1'-0"

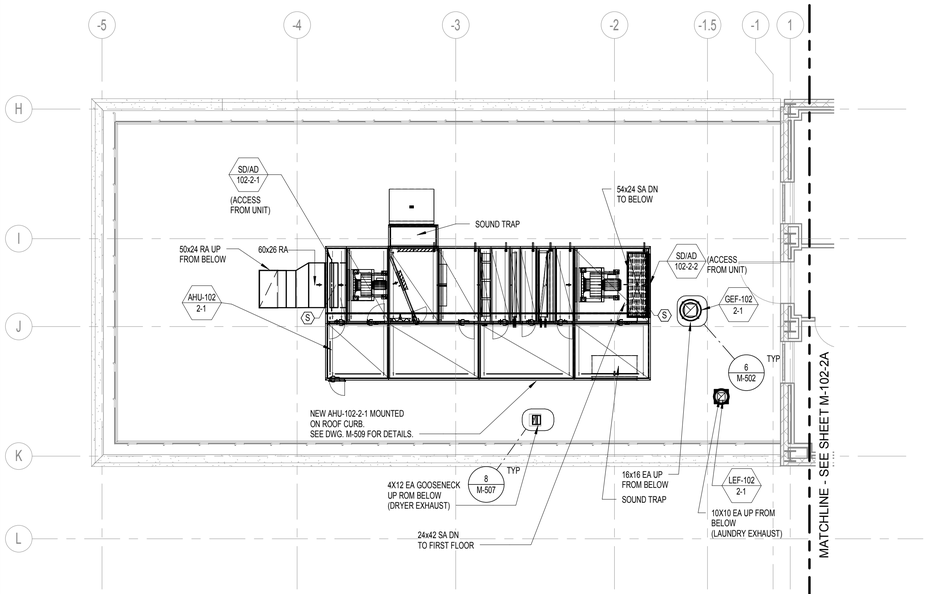

2 BLDG 102 2ND FLOOR PLAN PART A - NORTH
1/8" = 1'-0"

9/22/2015 12:06:46 PM

NEW YORK STATE OF OPPORTUNITY. Office of General Services
DESIGN & CONSTRUCTION

CONSULTANTS:
RBSD ARCHITECTS P.C. | STV 100 Years
A Joint Venture
225 Park Avenue South
New York, New York 10003

WARNING:
THE ALTERATION OF THIS MATERIAL IN ANY WAY, UNLESS DONE UNDER THE DIRECTION OF A COMPARABLE PROFESSIONAL, I.E. ARCHITECT FOR AN ARCHITECT, ENGINEER FOR AN ENGINEER OR LANDSCAPE ARCHITECT FOR A LANDSCAPE ARCHITECT, IS A VIOLATION OF THE NEW YORK STATE EDUCATION LAW AND/OR REGULATIONS AND IS A CLASS 'A' MISDEMEANOR.

CONTRACT: CONSTRUCTION

TITLE: MAJOR BUILDING RENOVATIONS FOR THE MANHATTAN FORENSIC RELOCATION

LOCATION: MANHATTAN PSYCHIATRIC CENTER, BUILDING No. 102
600 EAST 125TH STREET WARDS ISLAND, NY 10035

CLIENT: NYS OFFICE OF MENTAL HEALTH

MARK	DATE	DESCRIPTION
8	09/24/2015	ADDENDUM 8
	6-15-2015	BID DOCUMENT

PROJECT NUMBER:	44578
DESIGNED BY:	IL
DRAWN BY:	FG
FIELD CHECK:	N/A
APPROVED:	PL

SHEET TITLE: HVAC SECOND FLOOR PLAN, PART A

BUILDING NUMBER:	DRAWING NUMBER:
102	M-102-2A
SHEET	

GENERAL SHEET NOTES

1. FOR LEGEND AND ABBREVIATIONS REFER TO SHEET M-001 AND M-002
2. COIL PIPING VALVE ASSEMBLIES SHALL BE LOCATED SUCH THAT VALVE ASSEMBLIES DO NOT INTERFERE WITH THE ACCESS SPACE FOR COIL PULL.

KEY NOTES

1. CONNECT TO EXISTING HOT WATER PIPING FOR SIDE B RADIATORS. PROVIDE NEW CONNECTIONS TO HW PIPING & RISERS FOR ALL BRANCHES THAT WERE CAPPED FOR NEW CONNECTION AND REROUTE EXISTING BRANCH PIPING AS NECESSARY TO COORDINATE WITH NEW WORK. REFER TO MD2-099-2, MD2-100-2, AND MD2-101-2 FOR DEMOLITION WORK. REFER TO M-619-2 FOR DIAGRAM.

2. PROVIDE FLEXIBLE EXPANSION V-LOOPS (AS MANUFACTURED BY METRAFLEX) WITH AN EXPANSION MOVEMENT LENGTH EQUAL TO THE MAXIMUM EXPANSION OF THE BUILDING EXPANSION JOINT THE PIPE CROSSES FOR PIPING RUNS, AT EACH POINT WHERE PIPE CROSSES A BUILDING EXPANSION JOINT. COORDINATE WITH ARCHITECTURAL AND STRUCTURAL DRAWINGS AND EXISTING CONDITIONS FOR EXPANSION JOINT SIZES AND LOCATION. DO NOT PLACE ANY PIPE SUPPORTS OR ANCHORS BETWEEN THE V-LOOP AND THE BUILDING EXPANSION JOINT TO ENABLE FREE-MOVEMENT. WHERE PIPE PASSES THROUGH A WALL BETWEEN THE V-LOOP AND THE BUILDING EXPANSION JOINT, PROVIDE OVERSIZED HOLES IN THE WALL FOR THE PIPE, WITH FREE SPACE BETWEEN THE PIPE AND THE WALL EQUAL TO THE MAXIMUM EXPANSION OF THE BUILDING EXPANSION JOINT. FILL THE HOLE WITH FLEXIBLE SEALANT AS REQUIRED. (TYP)

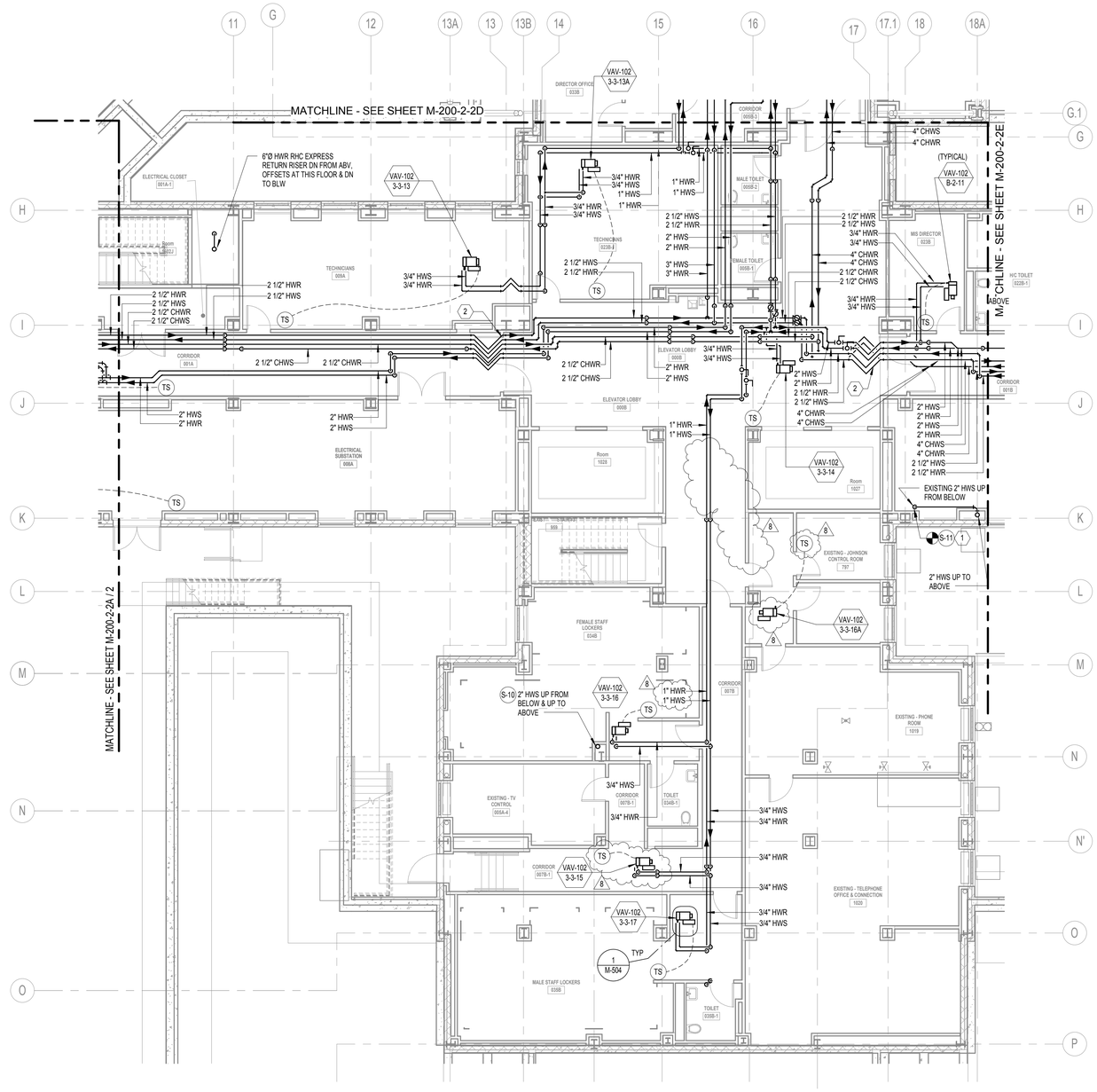

1 BLDG 102 PIPING BASEMENT FLOOR PLAN PART C
1/8" = 1'-0"

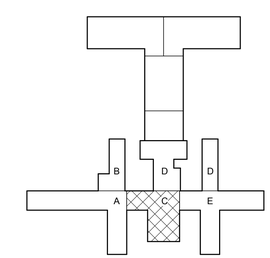

PROJECT NORTH

0 4' 8' 16'
SCALE: As indicated

8 REVISED DRAWING 09/24/2015

NEW YORK STATE OF OPPORTUNITY. Office of General Services

DESIGN & CONSTRUCTION

CONSULTANTS:

RBSD ARCHITECTS P.C. | STV 100 Years

A Joint Venture

225 Park Avenue South
New York, New York 10003

WARNING:
THE ALTERATION OF THIS MATERIAL IN ANY WAY, UNLESS DONE UNDER THE DIRECTION OF A COMPARABLE PROFESSIONAL, I.E. ARCHITECT FOR AN ARCHITECT, ENGINEER FOR AN ENGINEER OR LANDSCAPE ARCHITECT FOR A LANDSCAPE ARCHITECT, IS A VIOLATION OF THE NEW YORK STATE EDUCATION LAW AND/OR REGULATIONS AND IS A CLASS 'A' MISDEMEANOR.

CONTRACT:
CONSTRUCTION

TITLE:
MAJOR BUILDING RENOVATIONS FOR THE MANHATTAN FORENSIC RELOCATION

LOCATION: MANHATTAN PSYCHIATRIC CENTER, BUILDING No. 102
600 EAST 125TH STREET WARDS ISLAND, NY 10035

CLIENT:
NYS OFFICE OF MENTAL HEALTH

MARK	DATE	DESCRIPTION
8	09/24/2015	ADDENDUM 8
	6-15-2015	BID DOCUMENT

PROJECT NUMBER:	44578
DESIGNED BY:	JN
DRAWN BY:	YD
FIELD CHECK:	N/A
APPROVED:	PL

SHEET TITLE:
HVAC BASEMENT FLOOR PIPING PLAN, PART C

BUILDING NUMBER: 102
DRAWING NUMBER: M-200-2-2C
SHEET

9/22/2015 12:06:51 PM

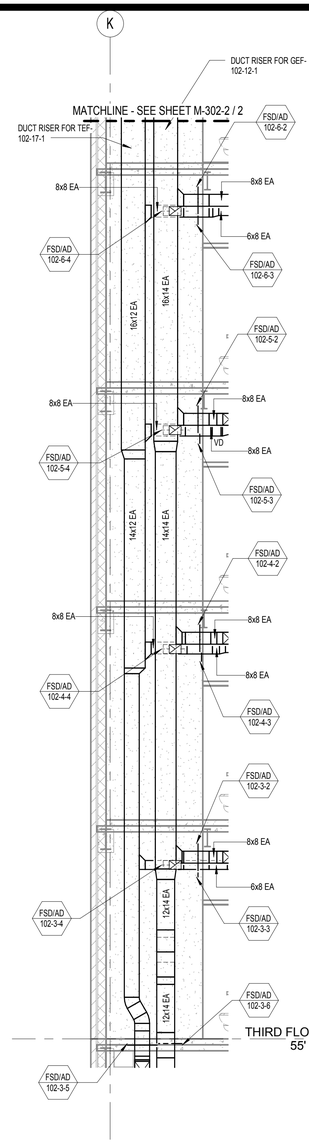

1 M-420-2 CHASE#2 3RD-6TH FLOORS
1/4" = 1'-0"

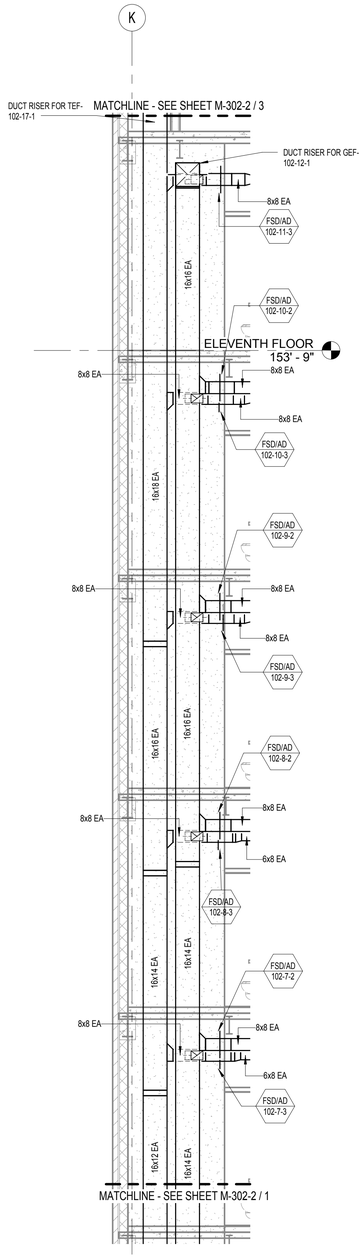

2 M-420-2 CHASE#2 7TH-11TH FLOORS
1/4" = 1'-0"

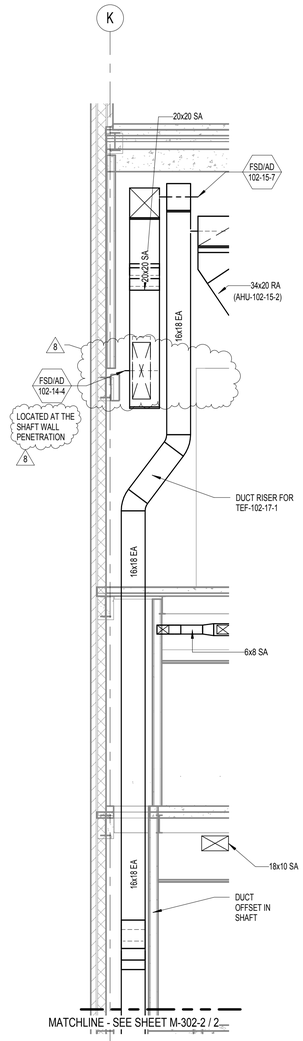

3 M-420-2 CHASE#2 12TH-15TH FLOORS
1/4" = 1'-0"

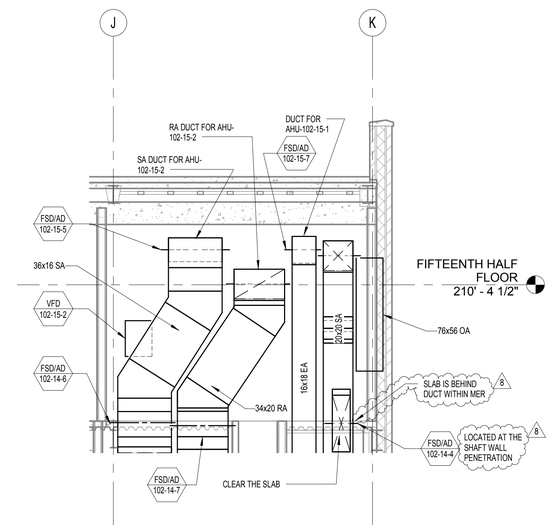

5 M-407-2 CHASE#8 15TH FLOOR
1/4" = 1'-0"

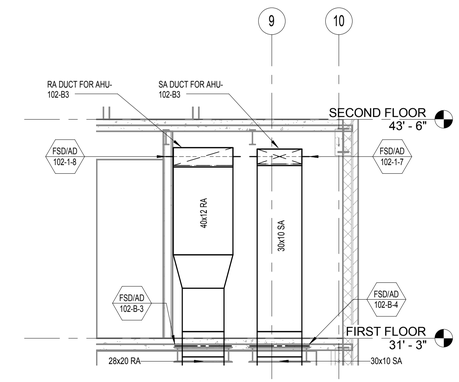

4 M-423-2 CHASE#3 1ST FLOOR
1/4" = 1'-0"

8 REVISED DRAWING 09/24/2015

0 2' 4' 8'
SCALE: 1/4" = 1'-0"

NEW YORK STATE OF OPPORTUNITY. Office of General Services
DESIGN & CONSTRUCTION

CONSULTANTS:
RBSD ARCHITECTS P.C. | STV 100 Years
A Joint Venture
225 Park Avenue South
New York, New York 10003

WARNING:
THE ALTERATION OF THIS MATERIAL IN ANY WAY, UNLESS DONE UNDER THE DIRECTION OF A COMPARABLE PROFESSIONAL, I.E. ARCHITECT FOR AN ARCHITECT, ENGINEER FOR AN ENGINEER OR LANDSCAPE ARCHITECT FOR A LANDSCAPE ARCHITECT, IS A VIOLATION OF THE NEW YORK STATE EDUCATION LAW AND/OR REGULATIONS AND IS A CLASS 'A' MISDEMEANOR.

CONTRACT: CONSTRUCTION
TITLE: MAJOR BUILDING RENOVATIONS FOR THE MANHATTAN FORENSIC RELOCATION
LOCATION: MANHATTAN PSYCHIATRIC CENTER, BUILDING No. 102 600 EAST 125TH STREET WARDS ISLAND, NY 10035
CLIENT: NYS OFFICE OF MENTAL HEALTH

MARK	DATE	DESCRIPTION
8	09/24/2015	ADDENDUM 8
	6-15-2015	BID DOCUMENT

PROJECT NUMBER:	44578
DESIGNED BY:	IL
DRAWN BY:	YD
FIELD CHECK:	N/A
APPROVED:	PL

SHEET TITLE: HVAC CHASE SECTIONS 2

BUILDING NUMBER: 102
DRAWING NUMBER: M-302-2
SHEET

9/22/2015 12:07:00 PM

KEY NOTES

1. REFRIGERANT PIPING TO BE SIZED AND ACCESSORIES TO BE PROVIDED AS REQUIRED PER MANUFACTURER'S REQUIREMENTS

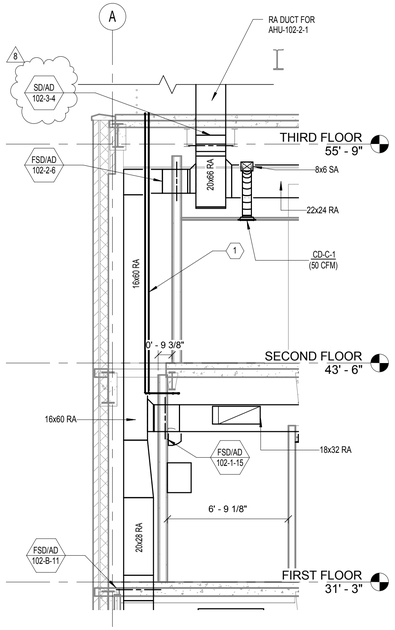

1 M-423-2 CHASE#10 1ST-2ND FLOORS

1/4" = 1'-0"

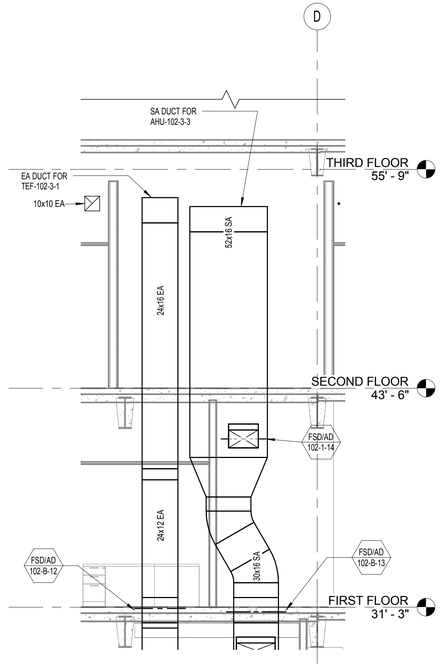

2 M-423-2 CHASE#11 1ST-2ND FLOORS

1/4" = 1'-0"

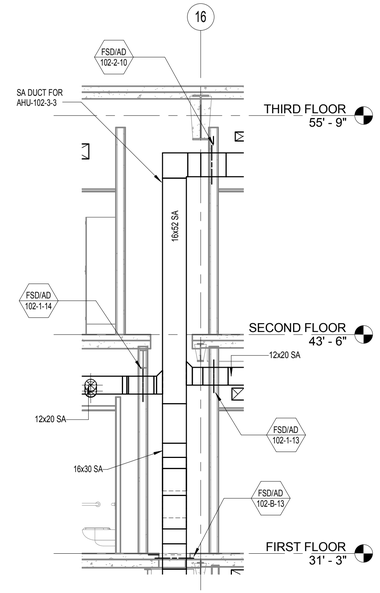

3 M-423-2 CHASE#11 1ST-2ND FLOORS AHU-102-3-3 SA RISER

1/4" = 1'-0"

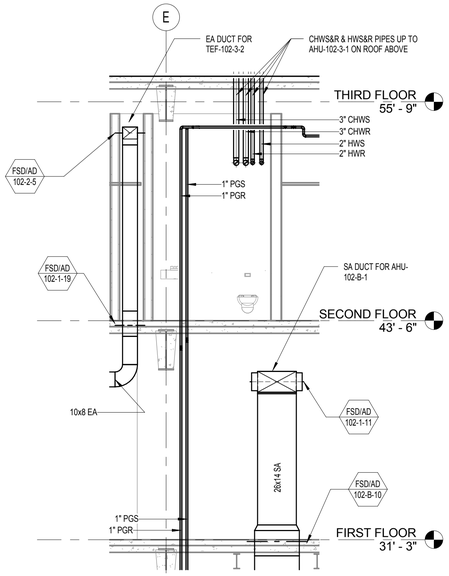

CHASE#9 1ST-2ND FLOORS 1

1/4" = 1'-0"

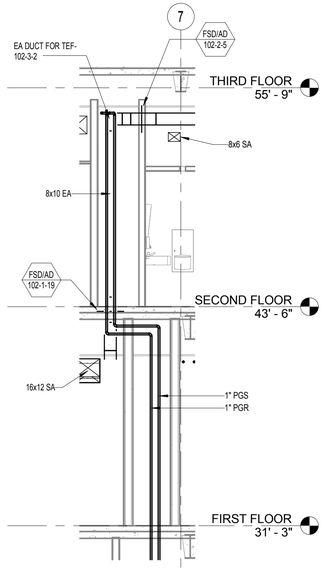

CHASE#9 1ST-2ND FLOORS 2

1/4" = 1'-0"

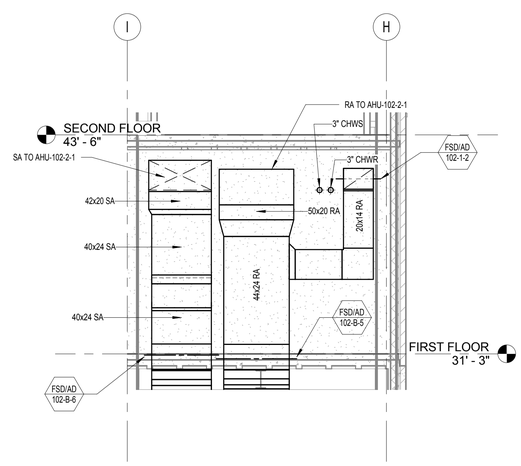

CHASE#14 1ST FLOOR SECTION

1/4" = 1'-0"

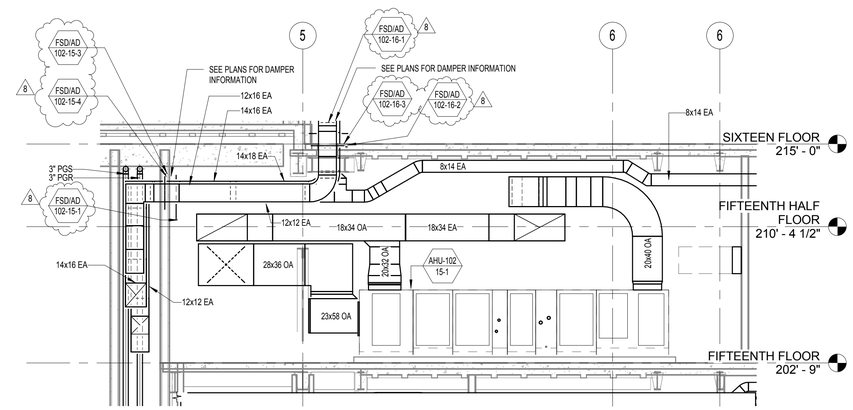

6 M-407-2 CHASE#16 15TH FLOOR

1/4" = 1'-0"

8 REVISED DRAWING 09/24/2015

0 2' 4' 8'

SCALE: As indicated

NEW YORK STATE OF OPPORTUNITY. Office of General Services

DESIGN & CONSTRUCTION

CONSULTANTS:

RBSD ARCHITECTS P.C. | STV 100 Years

A Joint Venture

225 Park Avenue South
New York, New York 10003

WARNING:
THE ALTERATION OF THIS MATERIAL IN ANY WAY, UNLESS DONE UNDER THE DIRECTION OF A COMPARABLE PROFESSIONAL, I.E. ARCHITECT FOR AN ARCHITECT, ENGINEER FOR AN ENGINEER OR LANDSCAPE ARCHITECT FOR A LANDSCAPE ARCHITECT, IS A VIOLATION OF THE NEW YORK STATE EDUCATION LAW AND/OR REGULATIONS AND IS A CLASS 'A' MISDEMEANOR.

CONTRACT: CONSTRUCTION

TITLE: MAJOR BUILDING RENOVATIONS FOR THE MANHATTAN FORENSIC RELOCATION

LOCATION: MANHATTAN PSYCHIATRIC CENTER, BUILDING No. 102
600 EAST 125TH STREET WARDS ISLAND, NY 10035

CLIENT: NYS OFFICE OF MENTAL HEALTH

MARK	DATE	DESCRIPTION
8	09/24/2015	ADDENDUM 8
	6-15-2015	BID DOCUMENT

PROJECT NUMBER:	44578
DESIGNED BY:	IL
DRAWN BY:	YD
FIELD CHECK:	N/A
APPROVED:	PL

SHEET TITLE: HVAC CHASE SECTIONS 4

BUILDING NUMBER: 102

DRAWING NUMBER: M-304-2

SHEET

9/22/2015 12:07:14 PM

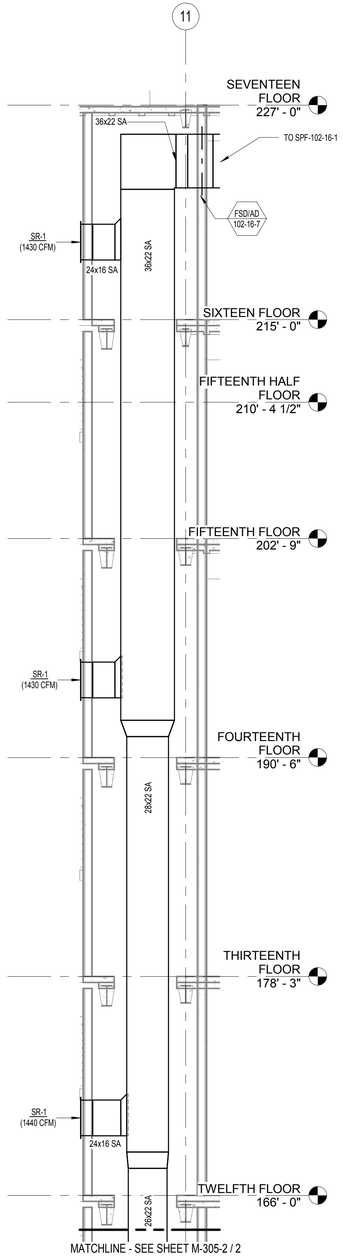

CHASE#5 - SPF DUCT 12TH-16TH FLOOR

1 M-424-2 1/4" = 1'-0"

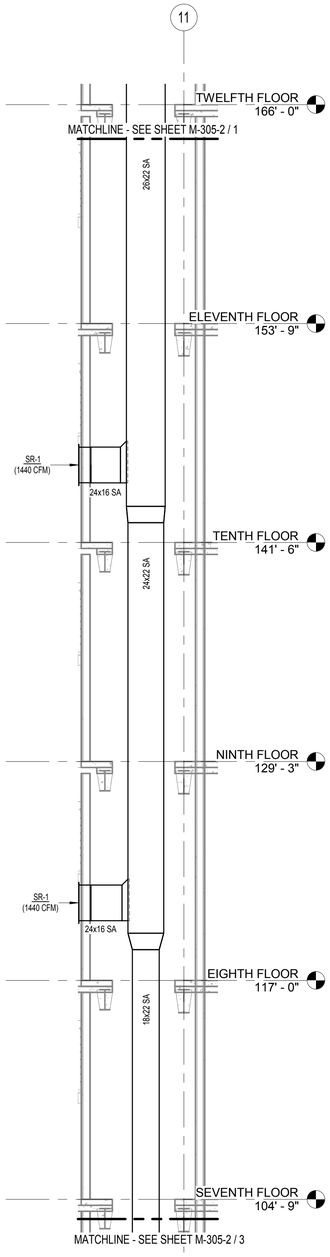

CHASE#5 - SPF DUCT 7TH-11TH FLOOR

2 M-424-2 1/4" = 1'-0"

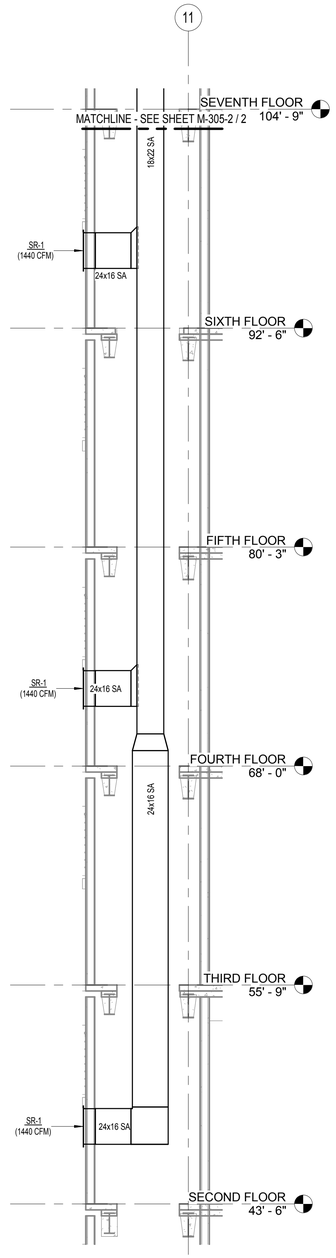

CHASE#5 - SPF DUCT 2ND-6TH FLOOR

3 M-424-2 1/4" = 1'-0"

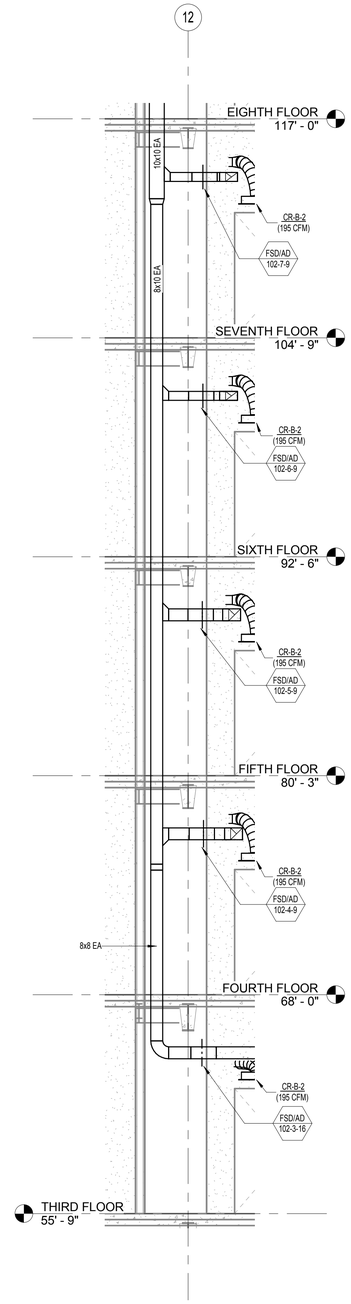

CHASE#7 3RD-7TH FLOORS

5 M-425-2 1/4" = 1'-0"

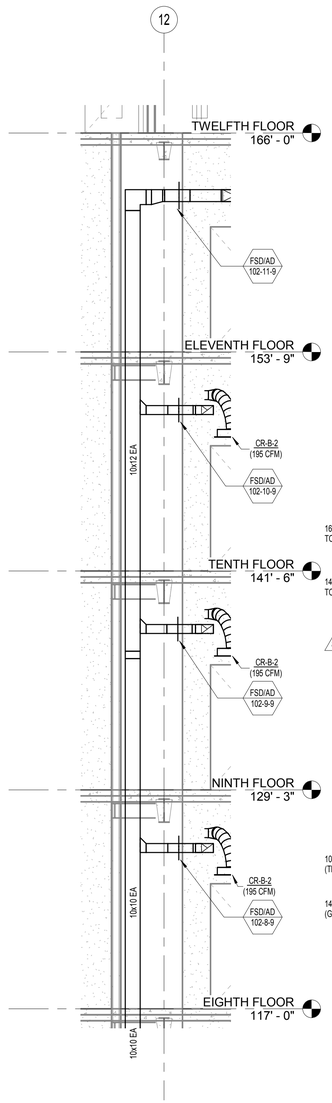

CHASE#7 8TH-11TH FLOORS

4 M-425-2 1/4" = 1'-0"

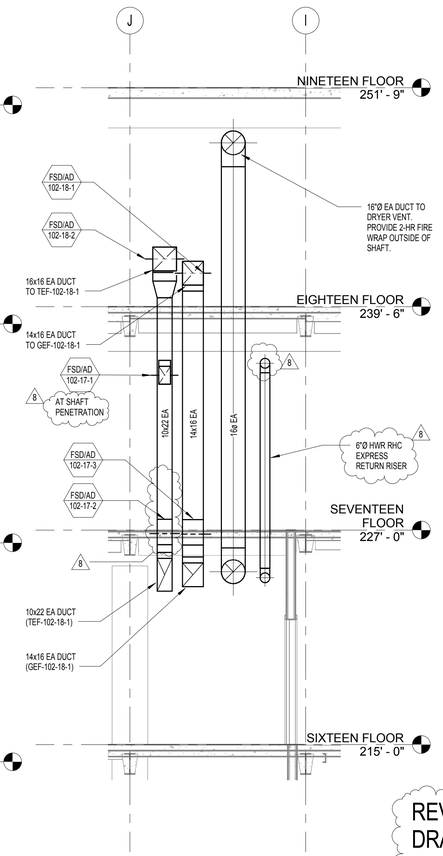

CHASE #17 16TH-18TH FLOORS

6 M-425-2 1/4" = 1'-0"

REVISED DRAWING 09/24/2015

0 2' 4' 8'

SCALE: 1/4" = 1'-0"

NEW YORK STATE OF OPPORTUNITY. Office of General Services

DESIGN & CONSTRUCTION

CONSULTANTS:

RBSD ARCHITECTS P.C. | STV 100 Years

A Joint Venture

225 Park Avenue South
New York, New York 10003

WARNING:
THE ALTERATION OF THIS MATERIAL IN ANY WAY, UNLESS DONE UNDER THE DIRECTION OF A COMPARABLE PROFESSIONAL, I.E. ARCHITECT FOR AN ARCHITECT, ENGINEER FOR AN ENGINEER OR LANDSCAPE ARCHITECT FOR A LANDSCAPE ARCHITECT, IS A VIOLATION OF THE NEW YORK STATE EDUCATION LAW AND/OR REGULATIONS AND IS A CLASS 'A' MISDEMEANOR.

CONTRACT: CONSTRUCTION

TITLE: MAJOR BUILDING RENOVATIONS FOR THE MANHATTAN FORENSIC RELOCATION

LOCATION: MANHATTAN PSYCHIATRIC CENTER, BUILDING No. 102
600 EAST 125TH STREET WARDS ISLAND, NY 10035

CLIENT: NYS OFFICE OF MENTAL HEALTH

MARK	DATE	DESCRIPTION
8	09/24/2015	ADDENDUM 8
	6-15-2015	BID DOCUMENT

PROJECT NUMBER:	44578
DESIGNED BY:	IL
DRAWN BY:	YD
FIELD CHECK:	N/A
APPROVED:	PL

SHEET TITLE: HVAC CHASE SECTIONS 5

BUILDING NUMBER: 102

DRAWING NUMBER: M-305-2

SHEET

9/22/2015 12:07:25 PM

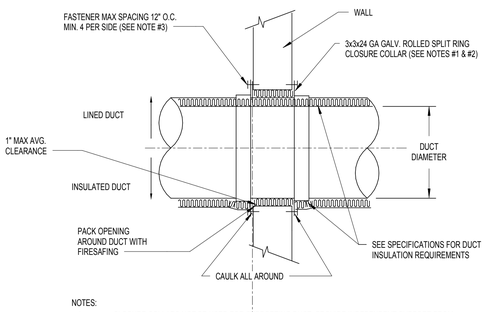

NOTES:
1. CLOSURE COLLARS NOT BE USED FOR SUPPORTING DUCT. PROVIDE INDEPENDENT SUPPORT FROM ABOVE OR BELOW FLOOR PER SMACNA CONSTRUCTION STANDARDS.
2. WHERE WALL CONSTRUCTION DOES NOT ALLOW FOR ROUND OPENING PROVIDE SHEET MEAL CLOSURE PIECES FASTENED AND SEALED TO BOTH SIDES OF WALL.
3. FASTENERS TO BE 3M SCREWS FOR METAL STUD WALLS, POWDER DRIVEN FASTENERS FOR CONC. WALLS OR MASONRY ANCHORS FOR MASONRY WALLS.
4. FOR FIRESEFING REFER TO SPECIFICATION SECTION 078400.

1 ROUND DUCT WALL PENETRATION
NTS

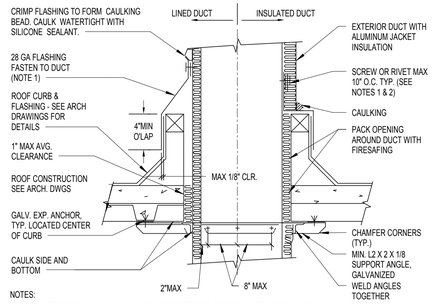

NOTES:
1. PROVIDE ALUMINUM FLASHING AND FASTENERS FOR INSULATED INSTALLATION.
2. PROVIDE TYPE 316 SST FLASHING AND FASTENERS FOR NON-INSULATED INSTALLATION.
3. PROVIDE INDEPENDENT SUPPORT ABOVE OR BELOW ROOF PER SMACNA CONSTRUCTION STANDARDS.
4. FOR METAL ROOF DECK EXTEND LOWER ANGLE CLOSURE COLLAR AND PROVIDE CLOSURE STRIPS TO SEAL COLLAR TO FLUTED SURFACE. WHERE ROOF CONSTRUCTION DOES NOT ALLOW FOR ROUND OPENING PROVIDE SHEET METAL CLOSURE PIECES FASTENED AND SEALED TO ROOF DECK.
5. FOR FIRESAFING REFER TO SPECIFICATION SECTION 078400.

2 RECTANGULAR DUCT ROOF PENETRATION
NTS

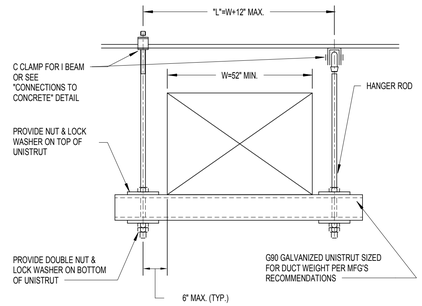

3 RECTANGULAR DUCT SUPPORT - 48" AND UP
NTS

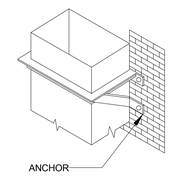

NOTE:
1. BRACKETS ARE SIZED FOR 12 FEET OF DUCT MAXIMUM.
2. LOCATE DUCTS AGAINST WALL OR MAXIMUM OF 2" AWAY FROM WALL.
3. EACH WALL ANCHOR SHALL SATISFY THE FOLLOWING CRITERIA UNLESS OTHER ANALYSIS IS MADE:
A. TENSILE LOAD= 3/8 x DUCT WEIGHT; SAFETY FACTOR OF 4.
B. SHEAR LOAD= 1/2 x DUCT WEIGHT; SAFETY FACTOR OF 4.

4 OUTDOOR DUCT RISER SUPPORT DETAIL
1/8" = 1'-0"

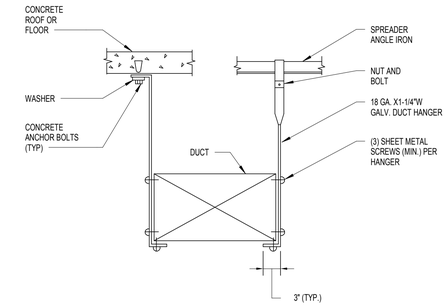

5 RECTANGULAR DUCT SUPPORT - UP TO 48"
NTS

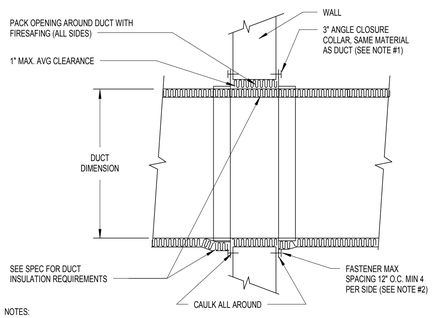

NOTES:
1. CLOSURE COLLARS NOT BE USED FOR SUPPORTING DUCT. PROVIDE INDEPENDENT SUPPORT FROM ABOVE OR BELOW FLOOR PER SMACNA CONSTRUCTION STANDARDS.
2. FASTENERS TO BE 3M SCREWS FOR METAL STUD WALLS, POWDER DRIVEN FASTENERS FOR CONC. WALLS OR MASONRY ANCHORS FOR MASONRY WALLS.

6 RECTANGULAR DUCT WALL PENETRATION
NTS

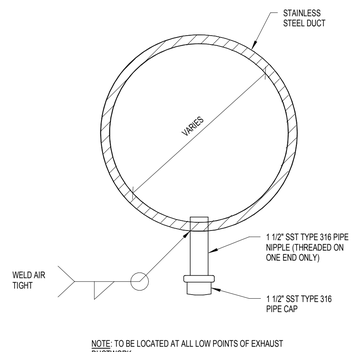

NOTE: TO BE LOCATED AT ALL LOW POINTS OF EXHAUST DUCTWORK

7 EXHAUST DUCT DRAIN
NTS

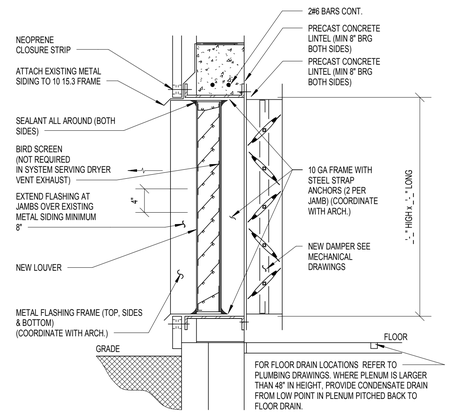

NOTE:
FOR ACTUATORS QUANTITY REFER TO DUCTS LAYOUTS.

8 LOUVER WITH AUTOMATIC DAMPER
NTS

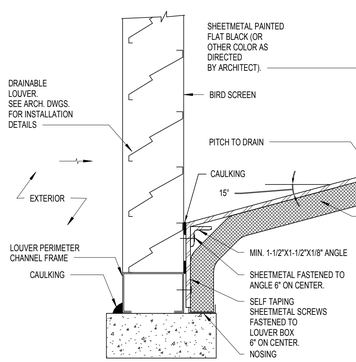

9 LOUVER W/ PLENUM INSTALLATION
NTS

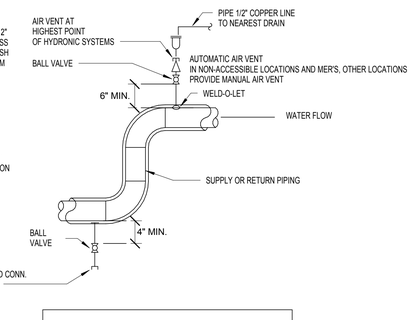

HEADER SIZE	>2	2 1/2-5	6<
DRAIN SIZE	1/2	1-1/2	2

10 AIR VENT & DRAIN
NTS

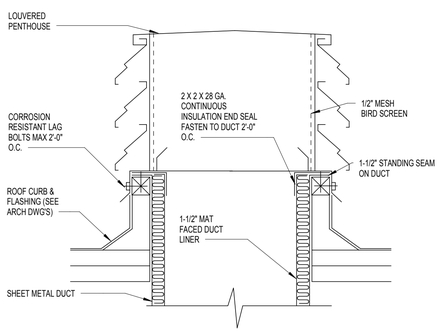

11 LOUVERED OUTSIDE AIR INTAKE/RELIEF
NTS

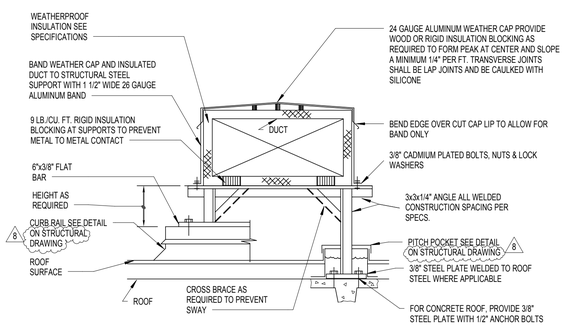

NOTES:
1. SUPPORT LEGS TO LINE UP WITH STRUCTURAL ELEMENTS BELOW
2. LEVEL DUCT SUPPORTS AND DUCTWORK INDEPENDENT FROM ROOF

12 SUPPORT AND SHROUDING OF INSULATED DUCT ABOVE ROOF
NTS

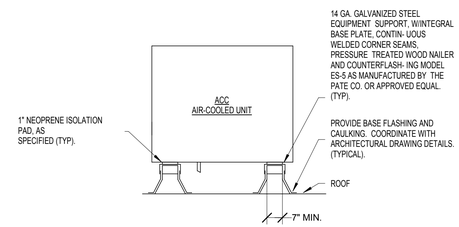

13 ROOF MOUNTED ACC UNIT SUPPORT
NTS

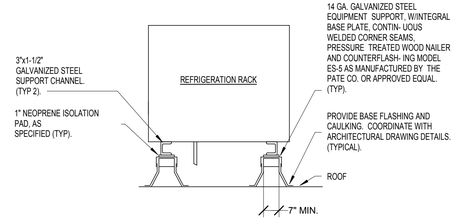

NOTES:
1. PROVIDE SUPPORTS AND CURB AS PER MANUFACTURER'S RECOMMENDATIONS AND SPECIFICATIONS

14 ROOF MOUNTED REFRIGERATION RACK SUPPORT
NTS

8
REVISED DRAWING 09/24/2015

NEW YORK STATE OF OPPORTUNITY. Office of General Services

DESIGN & CONSTRUCTION

CONSULTANTS:
RBSD ARCHITECTS P.C. | STV 100 Years
A Joint Venture
225 Park Avenue South
New York, New York 10003

WARNING:
THE ALTERATION OF THIS MATERIAL IN ANY WAY, UNLESS DONE UNDER THE DIRECTION OF A COMPARABLE PROFESSIONAL, I.E. ARCHITECT FOR AN ARCHITECT, ENGINEER FOR AN ENGINEER OR LANDSCAPE ARCHITECT FOR A LANDSCAPE ARCHITECT, IS A VIOLATION OF THE NEW YORK STATE EDUCATION LAW AND/OR REGULATIONS AND IS A CLASS 'A' MISDEMEANOR.

CONTRACT: CONSTRUCTION

TITLE: MAJOR BUILDING RENOVATIONS FOR THE MANHATTAN FORENSIC RELOCATION

LOCATION: MANHATTAN PSYCHIATRIC CENTER, BUILDING No. 102
600 EAST 125TH STREET WARDS ISLAND, NY 10035

CLIENT: NYS OFFICE OF MENTAL HEALTH

MARK	DATE	DESCRIPTION
8	09/24/2015	ADDENDUM 8
	6-15-2015	BID DOCUMENT

PROJECT NUMBER:	44578
DESIGNED BY:	IL
DRAWN BY:	YD
FIELD CHECK:	N/A
APPROVED:	PL

SHEET TITLE: HVAC DETAILS-1

BUILDING NUMBER: 102
DRAWING NUMBER: M-501
SHEET

9/22/2015 12:07:29 PM

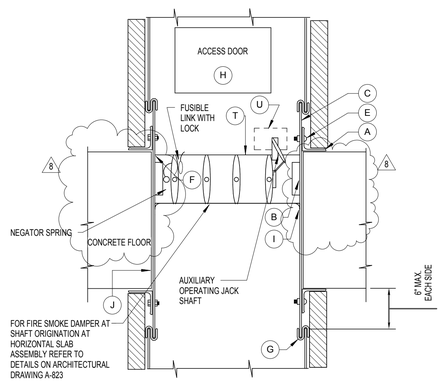

1 COMBINATION FIRE SMOKE DAMPER THROUGH FLOOR
NTS

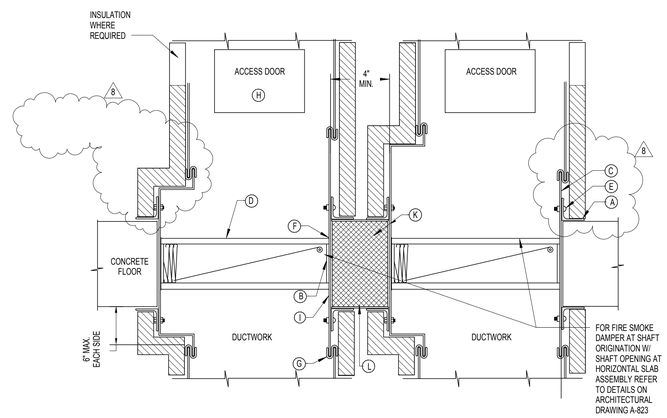

2 MULTIPLE FIRE DAMPER THROUGH FLOOR - STYLE B
NTS

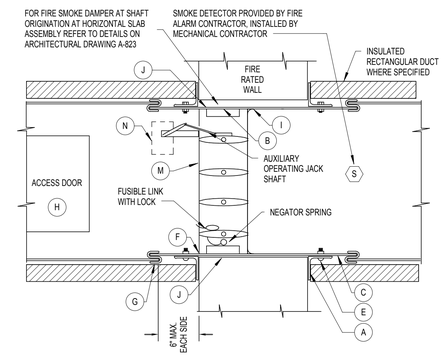

3 COMBINATION FIRE SMOKE DAMPER THROUGH WALL
NTS

BASIC FIRE AND FIRE/SMOKE DAMPER INSTALLATION REQUIREMENT KEYNOTES:
(DETAIL 1, 2, 3, 4 AND 5)

A. RETAINING ANGLES ALL AROUND OR PER MANUFACTURE UL APPROVALS: SIZE PER FOLLOWING SCHEDULE:

MAX. DUCT SIZE	ANGLE SIZE
24X24	1-1/2"X1/2"X14 GA.
36X36	2"X1-1/2"X1/8"
48X48	2"X1-1/2"X1/8"
60X60	2"X1-1/2"X1/8"
84X45	2-1/2"X1-1/2"X3/16"

B. CLEARANCE: 1/8" PER LINEAR FOOT OF OPENING, BOTH DIMENSIONS (1/2" MAXIMUM)
C. 16 GA. STEEL SLEEVE (14 GA. OVER 24" WIDTH)
D. U.L. APPROVED FIRE DAMPER (CURTAIN OR BLADE TYPE). LISTED FOR HORIZONTAL, VERTICAL, OR CEILING INSTALLATION AS APPLICABLE.
E. SECURE RETAINING ANGLES TO SLEEVE ONLY ON 8" CENTERS WITH:
1. 1/2" LONG WELD OR
2. 1/4" BOLTS AND NUTS, OR
3. NO. 10 STEEL SCREWS, OR
4. MINIMUM 3/16" STEEL RIVETS
F. SECURE DAMPER TO SLEEVE ON 8" CENTERS WITH:
1. 1/2" LONG WELD OR
2. 1/4" BOLTS AND NUTS IN HOLES PROVIDED, OR
3. NO. 10 STEEL SCREWS, OR
4. MINIMUM 3/16" STEEL RIVETS
G. SECURE DUCT TO SLEEVE WITH A BREAKAWAY OR SLIP DUCT CONNECTION
H. PROVIDE HINGED AND GASKETED ACCESS DOOR IN SIDE OR BOTTOM OF DUCT ON LATCH SIDE OF DAMPER. 18x16 MINIMUM SIZE (OR DUCT SIZE LESS 2" ON SMALLER DUCTS EXCEPT ON DUCT SIZES LESS ZEN 12" SQUARE PROVIDE WITH A REMOVABLE DUCT SECTION IN LIEU OF AN ACCESS DOOR; FOR DAMPERS THAT ARE TOO LARGE FOR AN ORDINARY PERSON'S ARM TO REACH FROM OUTSIDE THE DUCT TO RESET THE DAMPER AND REPLACE THE FUSIBLE LINK. THE MINIMUM SIZE FOR THE ACCESS DOOR SHALL BE INCREASED TO 24x16 TO ALLOW ENTRANCE OF AN INDIVIDUAL). ATTACH FRAME TO DUCT WITH S.M.S CREW AT 6" O.C.
I. FIRE RESISTANT CAULK, ALL AROUND PER MANUFACTURER INSTALLATION DIRECTIONS OR APPROVED EQUAL.
J. FRAME ALL AROUND OPENING AND COVER WITH 5/8" TYPE "X" GWB ON STUD FRAME CONSTRUCTION.
K. PACK OPENING AROUND DUCTWORK WITH FIRESAFING MATERIAL. SEE SPECIFICATIONS SECTION 078400. SUBMIT SAMPLE TO ARCHITECT & ENGINEER FOR REVIEW.
L. 16 GAUGE (MIN.) SHEET METAL CLOSURE PLATE ON BOTH SIDES OF BARRIER. PROVIDE REINFORCING IF REQUIRED.
M. UL APPROVED COMBINATION FIRE/SMOKE DAMPER (BLADE TYPE), LISTED FOR VERTICAL INSTALLATION.
N. OPERATOR/ACTUATOR (MOUNTED OUT OF AIRSTREAM).

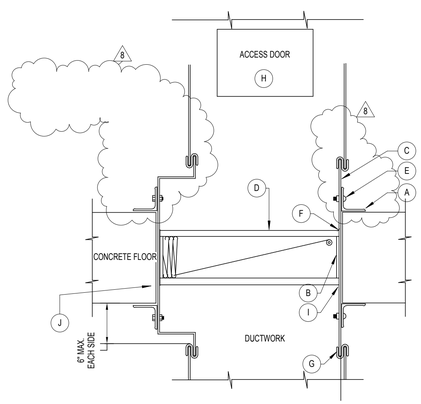

4 FIRE DAMPER THROUGH FLOOR STYLE - B
NTS

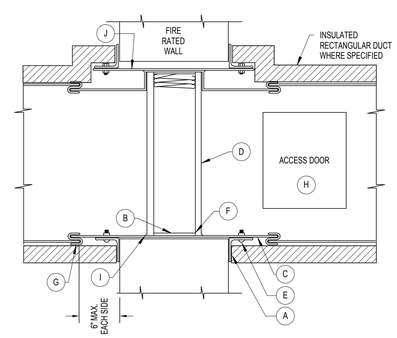

5 FIRE DAMPER THROUGH WALL STYLE - B
NTS

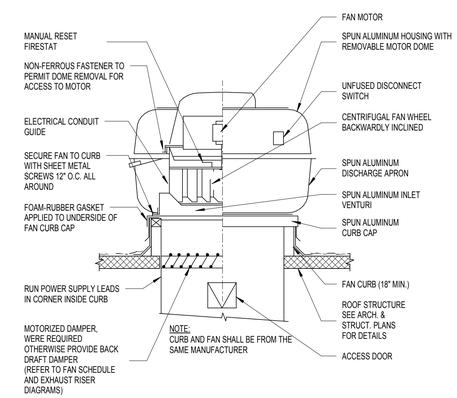

6 UP-BLAST CENTRIFUGAL EXHAUST FAN
NTS

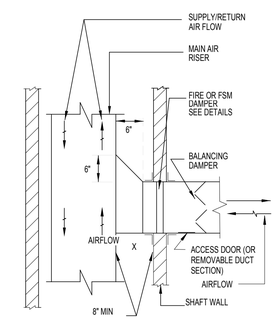

TYPE 1

NOTES:
1. FOR UPWARD SUPPLY OR DOWNWARD RETURN AIR FLOW, REVERSE DIRECTION OF FLARE TRANSITION.
2. FOR ROUND DUCTWORK-USE CONCENTRIC CONICAL CONNECTION FITTING.

7 FLARE TRANSITION FOR CONNECTION OF DUCT BRANCHES TO DUCT RISER THRU RATED WALLS
NTS

8 REVISED DRAWING 09/24/2015

NEW YORK STATE OF OPPORTUNITY. Office of General Services

DESIGN & CONSTRUCTION

CONSULTANTS:
RBSD ARCHITECTS P.C. | STV 100 Years
A Joint Venture
225 Park Avenue South
New York, New York 10003

WARNING:
THE ALTERATION OF THIS MATERIAL IN ANY WAY, UNLESS DONE UNDER THE DIRECTION OF A COMPARABLE PROFESSIONAL, I.E. ARCHITECT FOR AN ARCHITECT, ENGINEER FOR AN ENGINEER OR LANDSCAPE ARCHITECT FOR A LANDSCAPE ARCHITECT, IS A VIOLATION OF THE NEW YORK STATE EDUCATION LAW AND/OR REGULATIONS AND IS A CLASS 'A' MISDEMEANOR.

CONTRACT: CONSTRUCTION

TITLE: MAJOR BUILDING RENOVATIONS FOR THE MANHATTAN FORENSIC RELOCATION

LOCATION: MANHATTAN PSYCHIATRIC CENTER, BUILDING No. 102
600 EAST 125TH STREET WARDS ISLAND, NY 10035

CLIENT: NYS OFFICE OF MENTAL HEALTH

MARK	DATE	DESCRIPTION
8	09/24/2015	ADDENDUM 8
	6-15-2015	BID DOCUMENT

PROJECT NUMBER:	44578
DESIGNED BY:	IL
DRAWN BY:	YD
FIELD CHECK:	N/A
APPROVED:	PL

SHEET TITLE: HVAC DETAILS-2

BUILDING NUMBER: 102
DRAWING NUMBER: M-502
SHEET

9/22/2015 12:07:30 PM

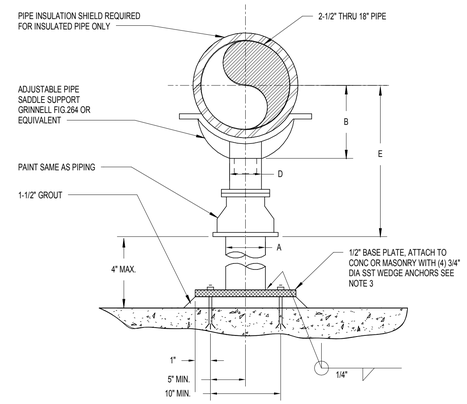

NOTES:

1. PROVIDE HALF ROUND RIGID INSULATION AND INSULATION SHIELD WHERE PIPING IS INSULATED.
2. PROVIDE NEOPRENE WAFFLE ISOLATION PAD UNDER SUPPORT FOOT WHEN PIPING IS ISOLATED OR SUPPORT IS ADJACENT TO MECHANICAL EQUIPMENT.
3. BASE PLATE, ANCHOR BOLTS AND WELDS SHOWN ARE MINIMUM. THEY MUST BE SIZED TO WITHSTAND THE PIPING LOADS WITH A SAFETY FACTOR OF 2.
4. REFER TO GRINNEL CATALOG FOR A, B, D & E DIMENSIONS.
5. FOR ADDITIONAL INFORMATION REFER TO SPECIFICATION.

1 ADJUSTABLE PIPE SUPPORT
NTS

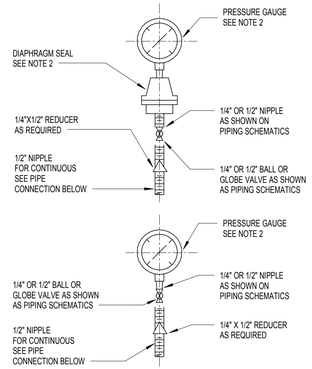

2 PRESSURE GAUGE MOUNTING
NTS

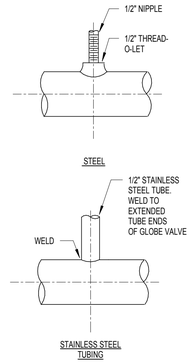

NOTES:

1. PROVIDE PRESSURE GAUGE AND DIAPHRAGM SEAL AS DESCRIBED IN SPECIFICATIONS.

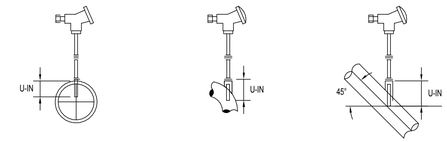

TABLE 1: IMMERSION LENGTHS FOR THERMOWELL MOUNTING METHODS

	PERPENDICULAR ELBOW MOUNT			ANGLE MOUNT		
PIPE SIZE	MIN U-INT	MAX U-IN	MIN U-INT	MAX U-IN	MIN U-IN	MAX U-IN
1	3++	3.5++	5	10+	4++	5++
1-1/2	3++	4++	5	10+	4++	5++
6	4	8	5	12+	5	6
8	4	8	5	14+	6	18
10	4	8	6	14+	6	10
12	5	9	6	14+	6	12
14	5	10	8	16+	8	12
16	5	10	12	16+	8	12
18	6	10	12	16+	8	14
20	6	10	12	16+	8	14
22	6	12	12	18+	8	16
24	6	12	12	18+	8	16

TABLE 2: MAXIMUM STEAM FLOW VELOCITIES FOR THERMOWELLS

U - IN (INCHES)	MAX. FLOW VELOCITY (FPS)	U - IN (INCHES)	MAX. FLOW VELOCITY (FPS)
2.5	490	10.5	52
3.0	309	13.5	26
4.5	228	16.0	17
6.0	156	19.5	12
7.5	83	22.5	9

3 THERMOWELL MOUNTING DETAIL

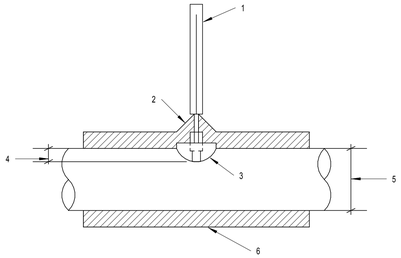

1. THERMOMETER - SEE SPECS FOR TYPE AND RANGE
2. BRASS THERMOMETER WELL
3. THREADOLET WELDED TO PIPE
4. DEPTH OF WELL ONE-THIRD OF PIPE DIAMETER
5. PIPE DIAMETER
6. PIPE INSULATION

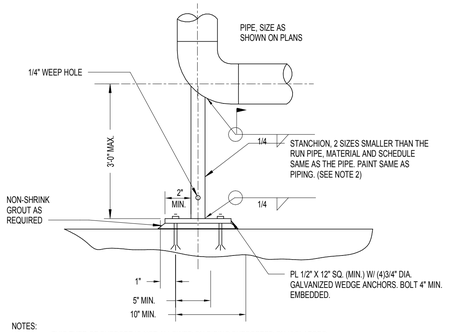

NOTES:

1. THIS TYPE OF SUPPORT IS NOT ALLOWED ON PIPING SUPPORTED ON ISOLATORS.
2. STANCHION, BASE PLATE, ANCHOR BOLTS AND WELDS SHALL BE SIZED TO WITHSTAND THE PIPING LOADS WITH A SAFETY FACTOR OF 2.

4 FLOOR BASE ELL SUPPORT
NTS

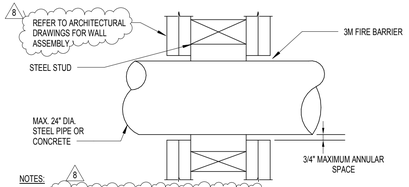

NOTES:

1. FOR WALL ASSEMBLY REFER TO ARCHITECTURAL DRAWINGS. WHEN THE DIAMETER OF THE OPENING EXCEEDS THE WIDTH OF THE STUD CAVITY, THE OPENING SHALL BE FRAMED ON ALL SIDES USING LENGTHS OF STEEL STUD INSTALLED BETWEEN THE VERTICAL STUDS AND SCREW ATTACHED TO THE STEEL STUDS AT EACH END. THE FRAMED OPENING IN THE WALL SHALL BE 4 TO 6 INCHES WIDER AND HIGHER THAN THE DIAMETER OF THE PENETRATING ITEM SUCH THAT THE PENETRATING IS CENTERED IN THE OPENING A 2 TO 3 INCH CLEARANCE IS PRESENT BETWEEN THE PENETRATING ITEM AND THE WALL FRAMING ON ALL FOUR SIDES.
2. PENETRATING ITEM(S): MAXIMUM 24 INCH DIAMETER MINIMUM SCHEDULE 10 STEEL PIPE IN OPENING OR MAXIMUM 4 INCH MINIMUM SCHEDULE 5 STEEL PIPE. CONDUIT/EMT OR MAXIMUM 6 INCH DIAMETER TYPE L (OR HEAVIER) COPPER BING. NOTE: FOR WOOD STUD WALLS THE DIAMETER OF THE PENETRATING ITEM CANNOT EXCEED THE WIDTH OF THE STUD CAVITY.
3. INSTALLATION NOTES:
   A. MAXIMUM 3/4 INCH ANNULAR SPACE.
   B. INSTALL 3 M FIRE BARRIER 2000 SILICONE SEALANT FOR 1-HR, 2-HR, 3-HR WALL CONSTRUCTION TO COMPLETELY FILL THE ANNULAR SPACE BETWEEN THE PIPE AND THE WALL ASSEMBLY. FILL TO THE FULL THICKNESS OF THE GYPSUM WALL (MINIMUM 1 1/4 INCH SEALANT THICKNESS) PLUS AN ADDITIONAL 1/4 INCH CROWN AROUND THE PERIMETER OF THE PIPE.

5 FIRE RATED WALL PIPE PENETRATION
NTS

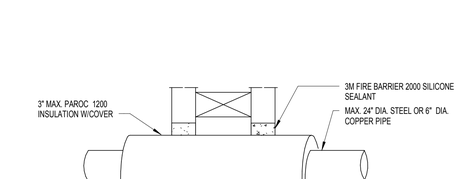

NOTES:

1. FOR WALL ASSEMBLY REFER TO ARCHITECTURAL DRAWINGS. WHEN THE DIAMETER OF THE OPENING EXCEEDS THE WIDTH OF THE STUD CAVITY, THE OPENING SHALL BE FRAMED ON ALL SIDES USING LENGTHS OF STEEL STUD INSTALLED BETWEEN THE VERTICAL STUDS AND SCREW ATTACHED TO THE STEEL STUDS AT EACH END. THE FRAMED OPENING IN THE WALL SHALL BE 4 TO 6 INCHES WIDER AND HIGHER THAN THE DIAMETER OF THE PENETRATING ITEM SUCH THAT THE PENETRATING IS CENTERED IN THE OPENING A 2 TO 3 INCH CLEARANCE IS PRESENT BETWEEN THE PENETRATING ITEM AND THE WALL FRAMING ON ALL FOUR SIDES.
2. PENETRATING ITEM(S): MAXIMUM 24 INCH DIAMETER MINIMUM SCHEDULE 10 STEEL PIPE IN OPENING OR MAXIMUM 4 INCH MINIMUM SCHEDULE 4 STEEL PIPE. CONDUIT/EMT OR MAXIMUM 6 INCH DIAMETER TYPE L (OR HEAVIER) COPPER TUBING OR MAXIMUM 6 INCH DIAMETER REGULAR (OR HEAVIER) COPPER PIPE COVERED INSULATION. PIPE INSULATION IS SECURED TO PIPE WITH MINIMUM 18 GA. STEEL TIE WIRE SPACE 12" ON CENTER. MINERAL WOOL PIPE INSULATION IS PAROC 1200 MANUFACTURED BY PARTEK INSULATIONS LTD. NOTE: FOR WOOD STUD WALLS, THE DIAMETER OF THE PENETRATING ITEM CANNOT EXCEED THE WIDTH OF THE STUD CAVITY.
3. INSTALLATION NOTES:
   a. MAXIMUM 3/4 INCH ANNULAR SPACE.
   b. INSTALL 3 M FIRE BARRIER 2000 SILICONE SEALANT FOR 1-HR, 2-HR, 3-HR WALL CONSTRUCTION TO COMPLETELY FILL THE ANNULAR SPACE BETWEEN THE PIPE AND THE WALL ASSEMBLY. FILL TO THE FULL THICKNESS OF THE GYPSUM WALL (MINIMUM 1 1/4 INCH SEALANT THICKNESS) PLUS AN ADDITIONAL 1/4 INCH CROWN AROUND THE PERIMETER OF THE PIPE.

6 FIRE RATED WALL PIPE W/ INSULATION PENETRATION
NTS

1. THERMOMETER - SEE SPECS FOR TYPE AND RANGE
2. BRASS THERMOMETER WELL
3. THREADOLET WELDED TO PIPE
4. DEPTH OF WELL ONE-THIRD OF PIPE DIAMETER
5. PIPE DIAMETER
6. PIPE INSULATION

7 THERMOMETER INSTALLATION IN INSULATED PIPE
NTS

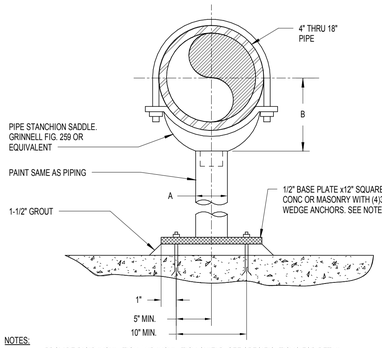

NOTES:

1. PROVIDE RIGID INSULATION AND INSULATION SHIELD. SEE SPECIFICATIONS FOR DETAIL.
2. PROVIDE NEOPRENE WAFFLE ISOLATION PAD UNDER SUPPORT FOOT WHEN PIPING IS ISOLATED OR SUPPORT IS ADJACENT TO MECHANICAL EQUIPMENT.
3. BASE PLATE, ANCHOR BOLTS AND WELDS SHOWN ARE MINIMUM, THEY MUST BE SIZED TO WITHSTAND THE PIPING LOADS WITH A SAFETY FACTOR OF 2.
4. FOR A & B DIMENSIONS REFER TO GRINNELL CATALOG.
5. FOR ADDITIONAL INFORMATION REFER TO SPECIFICATION.

8 NON-ADJUSTABLE PIPE SUPPORT
NTS

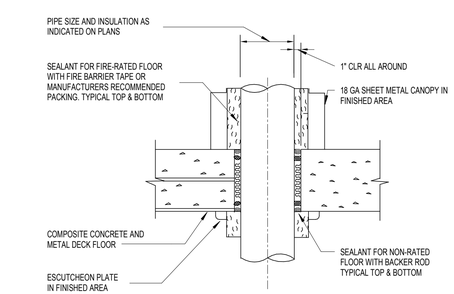

NOTES:

1. USED FOR RATED OR NON-FIRE RATED FLOORS, DRY LOCATIONS, CORE DRILLED HOLES WITHOUT SLEEVES, FOR HYDRONIC PIPING.
2. SEE SPECS SEALERS AND ARCHITECTURAL DETAILS AND SPECIFICATIONS FOR ADDITIONAL REQUIREMENTS
3. FOR VIBRATION ISOLATED PIPING PROVIDE RTV FOAM. PUTTY NOT ALLOWED. FOR INDIVIDUAL PIPES, PROVIDE SEALANT INDICATED ABOVE.

9 PIPE FLOOR PENETRATION - DRY AREA
NTS

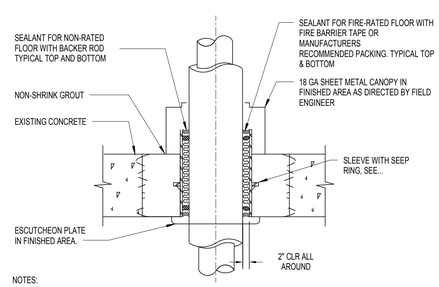

NOTES:

1. USED FOR RATED AND NON-FIRE RATED FLOORS, WET LOCATIONS, CORE DRILLED HOLES WITH PIPE SLEEVES, USE FOR HOT PIPE, STEAM AND CONDENSATE.
2. SEE SPECS FOR JOINT SEALERS AND ARCHITECTURAL DETAILS AND SPECIFICATIONS FOR ADDITIONAL REQUIREMENTS
3. FOR VIBRATION ISOLATED PIPING PROVIDE RTV FOAM. PUTTY NOT ALLOWED. INDIVIDUAL PIPES, PROVIDE SEALANT INDICATED ABOVE.
4. RISER CLAMPS OR WELDED LUGS NOT ALLOWED.
5. SEE SPECS FOR GROUTING.

10 PIPE FLOOR PENETRATION - WET AREA
NTS

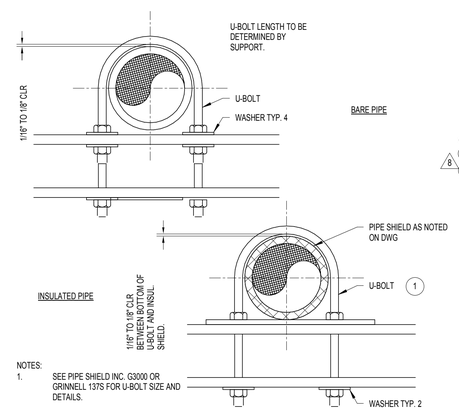

NOTES:

1. SEE PIPE SHIELD INC. G3000 OR GRINNELL 137S FOR U-BOLT SIZE AND DETAILS.

11 U-BOLT GUIDE
NTS

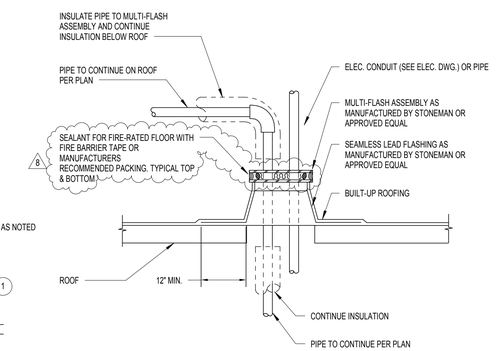

12 MULTIPLE PIPE THROUGH ROOF

8 REVISED DRAWING 09/24/2015

NEW YORK STATE OF OPPORTUNITY. Office of General Services

DESIGN & CONSTRUCTION

CONSULTANTS:

RBSD ARCHITECTS P.C. | STV 100 Years

A Joint Venture

225 Park Avenue South
New York, New York 10003

WARNING:
THE ALTERATION OF THIS MATERIAL IN ANY WAY, UNLESS DONE UNDER THE DIRECTION OF A COMPARABLE PROFESSIONAL, I.E. ARCHITECT FOR AN ARCHITECT, ENGINEER FOR AN ENGINEER OR LANDSCAPE ARCHITECT FOR A LANDSCAPE ARCHITECT, IS A VIOLATION OF THE NEW YORK STATE EDUCATION LAW AND/OR REGULATIONS AND IS A CLASS 'A' MISDEMEANOR.

CONTRACT: CONSTRUCTION

TITLE: MAJOR BUILDING RENOVATIONS FOR THE MANHATTAN FORENSIC RELOCATION

LOCATION: MANHATTAN PSYCHIATRIC CENTER, BUILDING No. 102
600 EAST 125TH STREET WARDS ISLAND, NY 10035

CLIENT: NYS OFFICE OF MENTAL HEALTH

MARK	DATE	DESCRIPTION
8	09/24/2015	ADDENDUM 8
	6-15-2015	BID DOCUMENT

PROJECT NUMBER:	44578
DESIGNED BY:	IL
DRAWN BY:	YD
FIELD CHECK:	N/A
APPROVED:	PL

SHEET TITLE: HVAC DETAILS-6

BUILDING NUMBER: 102

DRAWING NUMBER: M-506

SHEET

9/22/2015 12:07:30 PM

VARIABLE AIR VOLUME BOX SCHEDULE BUILDING 102 - 3

UNIT TAG	BLDG NO.	FLOOR NO.	VAV LOCATION	ROOM(S) SERVED	ASSOCIATED AIR HANDLER	PRIMARY AIR			ASSEMBLY PRESSURE DROP (IN. W.G.)	HEATING WATER COIL									SOUND DATA (dB)			MFR	MODEL No.	REMARKS
						MIN. INLET SIZE (IN)	MAX CFM	MIN CFM		HEATING CFM	No. OF ROWS	HEATING CAPACITY (Btu/hr)	EAT (°F)	LAT (°F)	GPM	EWT (°F)	LWT (°F)	WATER PRESSURE DROP (FT. W.G.)	RADIATED SOUND POWER	DISCHARGE SOUND POWER	ROOM SOUND POWER			
VAV-102-3-1-15	102	SECOND	230A	230A	AHU-102-3-1	6	295	295	0.14	295	1	8,710	55	82.4	0.9	180	160	0.90	20	31	31	ANEMOSTAT	EZTS	
VAV-102-3-1-16	102	SECOND	233A	232A, 233A, 234A	AHU-102-3-1	10	665	235	0.17	665	1	19,825	55	82.6	2.0	180	160	4.97	20	33	33	ANEMOSTAT	EZTS	
VAV-102-3-1-17	102	SECOND	236A	235A, 236A	AHU-102-3-1	8	390	150	0.15	390	1	11,601	55	82.6	1.2	180	160	1.71	20	32	32	ANEMOSTAT	EZTS	
VAV-102-3-1-17A	102	SECOND	205A	205A, 206A	AHU-102-3-1	6	285	285	0.14	285	1	11,348	55	91.9	1.1	180	160	0.90	20	31	31	ANEMOSTAT	EZTS	
VAV-102-3-1-18	102	SECOND	239A	238A, 239A	AHU-102-3-1	8	390	150	0.15	390	1	11,564	55	82.5	1.2	180	160	1.71	20	32	32	ANEMOSTAT	EZTS	
VAV-102-3-1-19	102	SECOND	240A	240A, 241A	AHU-102-3-1	8	485	150	0.15	485	1	15,217	55	84.1	1.5	180	160	1.71	20	32	32	ANEMOSTAT	EZTS	
VAV-102-3-1-20	102	SECOND	244A	242A, 243A, 244A	AHU-102-3-1	10	670	235	0.17	670	1	21,020	55	84.1	2.1	180	160	4.97	20	33	33	ANEMOSTAT	EZTS	
VAV-102-3-1-21	102	SECOND	247A	246A, 247A, 248A	AHU-102-3-1	10	685	235	0.17	685	1	19,182	55	81.0	1.9	180	160	4.97	20	33	33	ANEMOSTAT	EZTS	
VAV-102-3-1-22	102	SECOND	250A	249A, 250A	AHU-102-3-1	10	785	240	0.17	785	1	22,252	55	81.3	2.2	180	160	4.97	20	33	33	ANEMOSTAT	EZTS	
VAV-102-3-1-24	102	SECOND	203A	203A	AHU-102-3-1	5	105	50	0.15	105	1	3,959	55	89.9	0.4	180	160	0.47	20	25	25	ANEMOSTAT	EZTS	
VAV-102-3-2-1	102	THIRD	324A	331A	AHU-102-3-2	6	240	100	0.14	190	1	7,202	55	90.1	0.7	180	160	0.90	20	31	31	ANEMOSTAT	EZTS	
VAV-102-3-2-2	102	THIRD	324A	324A	AHU-102-3-2	6	210	210	0.14	210	1	7,599	55	88.5	0.8	180	160	0.90	20	31	31	ANEMOSTAT	EZTS	
VAV-102-3-2-3	102	THIRD	334A	334A, 335A	AHU-102-3-2	6	235	95	0.14	210	1	8,357	55	91.9	0.8	180	160	0.90	20	31	31	ANEMOSTAT	EZTS	
VAV-102-3-2-4	102	THIRD	324A	327A, 328A, 329A, 330A	AHU-102-3-2	14	1,175	900	0.13	940	1	30,306	55	84.9	3.0	180	160	1.63	20	34	34	ANEMOSTAT	EZTS	
VAV-102-3-2-5	102	THIRD	325A	326A-1	AHU-102-3-2	5	75	65	0.15	75	1	1,908	55	78.6	0.2	180	160	0.47	20	25	25	ANEMOSTAT	EZTS	
VAV-102-3-2-6	102	THIRD	339A	333A, 336A, 337A	AHU-102-3-2	12	950	380	0.15	860	1	27,638	55	84.8	2.8	180	160	0.63	20	33	33	ANEMOSTAT	EZTS	
VAV-102-3-2-7	102	THIRD	303A	325A	AHU-102-3-2	8	540	220	0.15	540	1	14,036	55	79.1	1.4	180	160	1.71	20	32	32	ANEMOSTAT	EZTS	
VAV-102-3-2-8	102	THIRD	341A	338A, 339A	AHU-102-3-2	5	150	60	0.15	150	1	3,400	55	76.0	0.3	180	160	0.47	20	25	25	ANEMOSTAT	EZTS	
VAV-102-3-2-9	102	THIRD	341A	340A, 341A	AHU-102-3-2	6	230	95	0.14	190	1	7,482	55	91.5	0.8	180	160	0.90	20	31	31	ANEMOSTAT	EZTS	
VAV-102-3-2-10	102	THIRD	342A	342A, 343A	AHU-102-3-2	10	600	550	0.17	600	1	15,725	55	79.3	1.6	180	160	4.97	20	33	33	ANEMOSTAT	EZTS	
VAV-102-3-2-11	102	THIRD	300A	300A	AHU-102-3-2	8	400	160	0.15	330	1	13,170	55	92.0	1.3	180	160	1.71	20	32	32	ANEMOSTAT	EZTS	
VAV-102-3-2-12	102	THIRD	324A	332A	AHU-102-3-2	6	240	100	0.14	190	1	6,085	55	84.7	0.6	180	160	0.90	20	31	31	ANEMOSTAT	EZTS	
VAV-102-3-2-13	102	THIRD	322A	322A, 318A-1	AHU-102-3-2	8	350	150	0.15	280	1	5,858	55	74.4	0.6	180	160	1.71	20	32	32	ANEMOSTAT	EZTS	
VAV-102-3-2-14	102	THIRD	322A	302A, 318A,323A	AHU-102-3-2	8	335	150	0.15	235	1	7,568	55	84.8	0.8	180	160	1.71	20	32	32	ANEMOSTAT	EZTS	
VAV-102-3-2-15	102	THIRD	342A	302A	AHU-102-3-2	8	450	300	0.15	450	1	10,215	55	76.0	1.0	180	160	1.71	20	32	32	ANEMOSTAT	EZTS	
VAV-102-3-2-16	102	THIRD	355A	355A	AHU-102-3-2	5	200	80	0.15	150	1	4,518	55	82.9	0.5	180	160	0.47	20	25	25	ANEMOSTAT	EZTS	
VAV-102-3-2-17	102	THIRD	354A	353A, 354A	AHU-102-3-2	5	150	135	0.15	150	1	5,793	55	90.8	0.6	180	160	0.47	20	25	25	ANEMOSTAT	EZTS	
VAV-102-3-2-18	102	THIRD	344A	346A, 348A, 345A	AHU-102-3-2	8	440	300	0.15	440	1	16,057	55	88.8	1.6	180	160	1.71	20	32	32	ANEMOSTAT	EZTS	
VAV-102-3-2-19	102	THIRD	344A	351A, 352A	AHU-102-3-2	10	545	235	0.17	545	1	16,279	55	82.7	1.6	180	160	4.97	20	33	33	ANEMOSTAT	EZTS	
VAV-102-3-2-20	102	THIRD	347A	347A	AHU-102-3-2	5	125	125	0.15	125	1	4,986	55	92.0	0.5	180	160	0.47	20	25	25	ANEMOSTAT	EZTS	
VAV-102-3-2-21	102	THIRD	344A	349A	AHU-102-3-2	6	215	90	0.14	215	1	8,205	55	90.4	0.8	180	160	0.90	20	31	31	ANEMOSTAT	EZTS	
VAV-102-3-2-22	102	THIRD	344A	344A,350A	AHU-102-3-2	8	455	185	0.15	360	1	14,368	55	92.0	1.4	180	160	1.71	20	32	32	ANEMOSTAT	EZTS	
VAV-102-3-2-23	102	THIRD	317A	317A	AHU-102-3-2	5	150	60	0.15	75	1	1,808	55	77.3	0.2	180	160	0.47	20	25	25	ANEMOSTAT	EZTS	
VAV-102-3-2-24	102	THIRD	307A	304A, 305A	AHU-102-3-2	6	205	135	0.14	205	1	6,008	55	82.2	0.6	180	160	0.90	20	31	31	ANEMOSTAT	EZTS	
VAV-102-3-2-25	102	THIRD	314A	315A	AHU-102-3-2	8	350	150	0.15	150	1	3,770	55	78.3	0.4	180	160	1.71	20	32	32	ANEMOSTAT	EZTS	
VAV-102-3-2-26	102	THIRD	313	313A, 314A	AHU-102-3-2	8	430	175	0.15	350	1	8,528	55	77.6	0.9	180	160	1.71	20	32	32	ANEMOSTAT	EZTS	
VAV-102-3-2-27	102	THIRD	311A	311A	AHU-102-3-2	6	220	90	0.14	175	1	5,319	55	83.2	0.5	180	160	0.90	20	31	31	ANEMOSTAT	EZTS	
VAV-102-3-2-28	102	THIRD	303A	303A	AHU-102-3-2	5	125	125	0.15	125	1	3,505	55	81.0	0.4	180	160	0.47	20	25	25	ANEMOSTAT	EZTS	
VAV-102-3-2-29	102	THIRD	310A	307A, 308A, 309A, 310A	AHU-102-3-2	12	950	380	0.15	705	1	23,745	55	86.2	2.4	180	160	0.63	20	33	33	ANEMOSTAT	EZTS	
VAV-102-3-2-30	102	THIRD	357B	362C	AHU-102-3-2	5	190	80	0.15	175	1	6,904	55	91.6	0.7	180	160	0.47	20	25	25	ANEMOSTAT	EZTS	
VAV-102-3-2-31	102	THIRD	319A	319A	AHU-102-3-2	14	1,300	520	0.13	1150	1	30,731	55	79.8	3.1	180	160	1.63	20	34	34	ANEMOSTAT	EZTS	
VAV-102-3-2-32	102	THIRD	357B	345A	AHU-102-3-2	8	550	220	0.15	275	1	9,066	55	85.6	0.9	180	160	1.71	20	32	32	ANEMOSTAT	EZTS	
VAV-102-3-2-33	102	THIRD	364A	357B, 364A, EX. SALLY PORT	AHU-102-3-2	10	550	235	0.17	250	1	9,758	55	91.2	1.0	180	160	4.97	20	33	33	ANEMOSTAT	EZTS	
VAV-102-3-2-34	102	THIRD	364A	358A	AHU-102-3-2	8	305	150	0.15	155	1	5,828	55	89.8	0.6	180	160	1.71	20	32	32	ANEMOSTAT	EZTS	
VAV-102-3-2-35	102	THIRD	301B	301B	AHU-102-3-2	14	1,150	1,150	0.13	1150	1	27,902	55	77.5	2.8	180	160	1.63	20	34	34	ANEMOSTAT	EZTS	
VAV-102-3-2-36	102	THIRD	325A	326A	AHU-102-3-2	5	200	160	0.15	160	1	3,466	55	75.1	0.3	180	160	0.47	20	25	25	ANEMOSTAT	EZTS	
VAV-102-3-3-1A	102	FIN. BASEMENT	026B	026B	AHU-102-3-3	5	140	50	0.15	140	1	5,062	55	88.5	0.5	180	160	0.47	20	25	25	ANEMOSTAT	EZTS	
VAV-102-3-3-1B	102	FIN. BASEMENT	006B	006B-2	AHU-102-3-3	8	370	150	0.15	370	1	14,749	55	91.9	1.5	180	160	1.71	20	32	32	ANEMOSTAT	EZTS	
VAV-102-3-3-2	102	FIN. BASEMENT	006B-1	005B, 006B-1, 005B-3	AHU-102-3-3	8	415	415	0.15	330	1	9,491	55	81.7	1.0	180	160	1.71	20	32	32	ANEMOSTAT	EZTS	
VAV-102-3-3-3	102	FIN. BASEMENT	006B-1	006B, 006B-1	AHU-102-3-3	8	500	500	0.15	500	1	19,850	55	91.8	2.0	180	160	1.71	20	32	32	ANEMOSTAT	EZTS	
VAV-102-3-3-4	102	FIN. BASEMENT	028B	027B	AHU-102-3-3	8	480	150	0.15	385	1	7,966	55	74.2	0.8	180	160	1.71	20	32	32	ANEMOSTAT	EZTS	
VAV-102-3-3-5	102	FIN. BASEMENT	028B	028B, 030B-1, 030B-3, 030B-4	AHU-102-3-3	12	710	315	0.15	570	1	13,502	55	77.0	1.4	180	160	0.63	20	33	33	ANEMOSTAT	EZTS	
VAV-102-3-3-6	102	FIN. BASEMENT	030B-2	029B-3	AHU-102-3-3	6	250	135	0.14	250	1	8,806	55	87.6	0.9	180	160	0.90	20	31	31	ANEMOSTAT	EZTS	
VAV-102-3-3-7	102	FIN. BASEMENT	030B-2	029B, 029B-2	AHU-102-3-3	6	210	85	0.14	180	1	7,141	55	91.8	0.7	180	160	0.90	20	31	31	ANEMOSTAT	EZTS	
VAV-102-3-3-8	102	FIN. BASEMENT	030B	030B	AHU-102-3-3	6	225	85	0.14	190	1	7,579	55	92.0	0.8	180	160	0.90	20	31	31	ANEMOSTAT	EZTS	
VAV-102-3-3-9	102	FIN. BASEMENT	029B-4	029B-6, 029B-7, 031B	AHU-102-3-3	8	330	100	0.15	330	1	10,237	55	83.7	1.0	180	160	1.71	20	32	32	ANEMOSTAT	EZTS	
VAV-102-3-3-10	102	FIN. BASEMENT	030B	033B	AHU-102-3-3	5	170	60	0.15	170	1	5,159	55	83.1	0.5	180	160	0.47	20	25	25	ANEMOSTAT	EZTS	
VAV-102-3-3-10A	102	FIN. BASEMENT	029B-5	029B-5	AHU-102-3-3	5	100	50	0.15	100	1	3,821	55	90.4	0.4	180	160	0.47	20	25	25	ANEMOSTAT	EZTS	
VAV-102-3-3-11	102	FIN. BASEMENT	029B-4	029B-4	AHU-102-3-3	6	100	85	0.14	85	1	3,353	55	91.6	0.3	180	160	0.90	20	31	31	ANEMOSTAT	EZTS	
VAV-102-3-3-12	102	FIN. BASEMENT	029B-4	032B	AHU-102-3-3	8	420	150	0.15	150	1	4,187	55	80.9	0.4	180	160	1.71	20	32	32	ANEMOSTAT	EZTS	
VAV-102-3-3-13	102	FIN. BASEMENT	009A	009A	AHU-102-3-3	10	780	235	0.17	625	1	19,298	55	83.6	1.9	180	160	4.97	20	33	33	ANEMOSTAT	EZTS	
VAV-102-3-3-13A	102	FIN. BASEMENT	023B-1	023B-1	AHU-102-3-3	8	320	150	0.15	320	1	8,930	55	80.9	0.9	180	160	1.71	20	32	32	ANEMOSTAT	EZTS	
VAV-102-3-3-14	102	FIN. BASEMENT	1	000B	AHU-102-3-3	8	510	510	0.15	510	1	15,674	55	83.5	1.6	180	160	1.71	20	32	32	ANEMOSTAT	EZTS	
VAV-102-3-3-15	102	FIN. BASEMENT	8 007B-1	007B, 007B-1	AHU-102-3-3	6	250	85	0.14	250	1	7,425	55	82.5	0.7	180	160	0.90	20	31	31	ANEMOSTAT	EZTS	
8 VAV-102-3-3-16	102	FIN. BASEMENT	034B	034B	AHU-102-3-3	6	285	85	0.14	285	1	10,127	55	87.9	1.0	180	160	0.90	20	31	31	ANEMOSTAT	EZTS	
VAV-102-3-3-16A	102	FIN. BASEMENT	CONTROL RM. CORRIDOR	797	AHU-102-3-3	5	200	80	0.15	200	1	15,541	0	72.0	1.6	0	0	0.47	20	25	25	ANEMOSTAT	EZTS	VAV ONLY, NO REHEAT COIL
VAV-102-3-3-17	102	FIN. BASEMENT	035B	035B	AHU-102-3-3	6	285	85	0.14	285	1	9,789	55	86.8	1.0	180	160	0.90	20	31	31	ANEMOSTAT	EZTS	
VAV-102-3-3-18A	102	FIRST	166B	119B, 166B, 7	AHU-102-3-3	10	625	450	0.17	500	1	15,994	55	84.6	1.6	180	160	4.97	20	33	33	ANEMOSTAT	EZTS	
VAV-102-3-3-18B	102	FIRST	121B	121B, 193B, 188B	AHU-102-3-3	8	325	325	0.15	325	1	7,719	55	77.0	0.8	180	160	1.71	20	32	32	ANEMOSTAT	EZTS	
VAV-102-3-3-19	102	FIRST	171B	171B, 172B	AHU-102-3-3	8	410	150	0.15	410	1	11,634	55	81.3	1.2	180	160	1.71	20	32	32	ANEMOSTAT	EZTS	
VAV-102-3-3-20	102	FIRST	177B	176B, 177B	AHU-102-3-3	8	370	150	0.15	370	1	10,770	55	82.0	1.1	180	160	1.71	20	32	32	ANEMOSTAT	EZTS	
VAV-102-3-3-21	102	FIRST	173B	173B, 174B	AHU-102-3-3	8	420	125	0.15	420	1	12,068	55	81.6	1.2	180	160	1.71	20	32	32	ANEMOSTAT	EZTS	
VAV-102-3-3-22	102	FIRST	175B	175B	AHU-102-3-3	6	230	85	0.14	230	1	7,997	55	87.2	0.8	180	160	0.90	20	31	31	ANEMOSTAT	EZTS	
VAV-102-3-3-23	102	FIRST	121B	120B, 178B	AHU-102-3-3	5	170	170	0.15	170	1	5,732	55	86.2	0.6	180	160	0.47	20	25	25	ANEMOSTAT	EZTS	
VAV-102-3-3-23A	102	FIRST	179B	170B, 179B, 119B, 188B	AHU-102-3-3	8	380	380	0.15	380	1	11,769	55	83.7	1.2	180	160	1.71	20	32	32	ANEMOSTAT	EZTS	
VAV-102-3-3-24	102	FIRST	184B	118B	AHU-102-3-3	5	115	115	0.15	115	1	4,545	55	91.6	0.5	180	160	0.47	20	25	25	ANEMOSTAT	EZTS	
VAV-102-3-3-25	102	FIRST	184B	184B	AHU-102-3-3	10	725	235	0.17	365	1	14,246	55	91.2	1.4	180	160	4.97	20	33	33	ANEMOSTAT	EZTS	
VAV-102-3-3-26	102	FIRST	180B	180B, 181B, 182B	AHU-102-3-3	10	515	235	0.17	515	1	16,181	55	84.1	1.6	180	160	4.97	20	33	33	ANEMOSTAT	EZTS	
VAV-102-3-3-27	102	FIRST	167B	167B	AHU-102-3-3	14	1,225	430	0.13	615	1	23,161	55	89.9	2.3	180	160	1.63	20	34	34	ANEMOSTAT	EZTS	
VAV-102-3-3-28	102	FIRST	168B	168B, 168B-1,	AHU-102-3-3	8	480	150	0.15	300	1	11,169	55	89.5	1.1	180	160	1.71	20	32	32	ANEMOSTAT	EZTS	
VAV-102-3-3-29	102	SECOND	294B	294B, 288B-1	AHU-102-3-3	8	515	235	0.15	515	1	14,804	55	81.6	1.5	180	160	1.71	20	32	32	ANEMOSTAT	EZTS	
VAV-102-3-3-30	102	SECOND	289B	289B, 281B,288B, 287B, 293B	AHU-102-3-3	8	475	150	0.15	475	1	14,646	55	83.6	1.5	180	160	1.71	20	32	32	ANEMOSTAT	EZTS	
VAV-102-3-3-30A	102	SECOND	293B	291B, 293B	AHU-102-3-3	5	130	85	0.15	130	1	4,658	55	88.2	0.5	180	160	0.47	20	25	25	ANEMOSTAT	EZTS	
VAV-102-3-3-31	102	SECOND	291B	284B, 285B, 286B	AHU-102-3-3	8	415	150	0.15	415	1	13,226	55	84.5	1.3	180	160	1.71	20	32	32	ANEMOSTAT	EZTS	
VAV-102-3-3-32	102	SECOND	272B-3	279B, 283B	AHU-102-3-3	8	440	150	0.15	440	1	10,930	55	78.0	1.1	180	160	1.71	20	32	32	ANEMOSTAT	EZTS	
VAV-102-3-3-33	102	SECOND	283B	277B, 278B	AHU-102-3-3	5	100	50	0.15	100	1	2,887	55	81.8	0.3	180	160	0.47	20	25	25	ANEMOSTAT	EZTS	
VAV-102-3-3-34	102	SECOND	273B	274B, 273B	AHU-102-3-3	5	150	50	0.15	150	1	5,048	55	86.2	0.5	180	160	0.47	20	25	25	ANEMOSTAT	EZTS	
VAV-102-3-3-35	102	SECOND	275B	275B, 292B-2	AHU-102-3-3	10	655	200	0.17	655	1	17,452	55	79.7	1.8	180	160	4.97	20	33	33	ANEMOSTAT	EZTS	
VAV-102-3-3-36	102	SECOND	292B-2	292B-3	AHU-102-3-3	6	300	160	0.14	300	1	9,235	55	83.5	0.9	180	160	0.90	20	31	31	ANEMOSTAT	EZTS	
VAV-102-3-3-37	102	SECOND	292B-5	292B-5	AHU-102-3-3	6	300	90	0.14	300	1	6,700	55	75.7	0.7	180	160	0.90	20	31	31	ANEMOSTAT	EZTS	
VAV-102-3-3-38	102	SECOND	292B-4	292B-4	AHU-102-3-3	6	300	90	0.14	300	1	9,244	55	83.6	0.9	180	160	0.90	20	31	31	ANEMOSTAT	EZTS	
VAV-102-3-3-39	102	SECOND	294B	251B	AHU-102-3-3	8	535	160	0.15	485	1	19,272	55	91.8	1.9	180	160	1.71	20	32	32	ANEMOSTAT	EZTS	
VAV-102-3-3-40	102	SECOND	277B	272B-4	AHU-102-3-3	5	90	50	0.15	90	1	3,234	55	88.3	0.3	180	160	0.47	20	25	25	ANEMOSTAT	EZTS	
VAV-102-3-3-41	102	SECOND	279B-1	279B-1, 279B-2, 279B-3	AHU-102-3-3	8	375	150	0.15	375	1	12,785	55	86.6	1.3	180	160	1.71	20	32	32	ANEMOSTAT	EZTS	
VAV-102-3-3-42	102	SECOND	271B	271B	AHU-102-3-3	8	310	150	0.15	310	1	7,269	55	76.7	0.7	180	160	1.71	20	32	32	ANEMOSTAT	EZTS	
VAV-102-3-3-43	102	SECOND	271B	271B	AHU-102-3-3	10	680	235	0.17	680	1	14,054	55	74.2	1.4	180	160	4.97	20	33	33	ANEMOSTAT	EZTS	
VAV-102-3-3-44	102	SECOND	271B	271B	AHU-102-3-3	8	510	150	0.15	510	1	10,937	55	74.9	1.1	180	160	1.71	20	32	32	ANEMOSTAT	EZTS	

NOTES:

1. SELECTION BASED ON 0.5" INLET PRESSURE.
2. CONTROLS MOUNTED ON BOX. CONTROLLERS FURNISHED BY CONTROLS CONTRACTOR AND SHIPPED TO VAV BOX FACTORY FOR ASSEMBLY.
3. 120v TO 24v TRANSFORMERS ARE PROVIDED WITHIN BMS PANELS TO SERVE GROUP OF VAV BOXES. 120 VOLTS TO THE PANELS SHALL BE PROVIDED BY ELECTRICAL CONTRACTOR, 24 VOLTS BY BMS CONTRACTOR.
4. LOCATE CONTROL BOX AND RHC CONNECTIONS ON THE SAME SIDE.BASIS OF DESIGN IS ANEMOSTAT. NUMBER OF ROWS DEPENDS ON MANUFACTURER SELECTED.
5. PROVIDE DISCONNECT TOGGLE SWITCH.

8 REVISED DRAWING 09/24/2015

NEW YORK STATE OF OPPORTUNITY. Office of General Services

DESIGN & CONSTRUCTION

CONSULTANTS:

RBSD ARCHITECTS P.C. | STV 100 Years

A Joint Venture

225 Park Avenue South
New York, New York 10003

WARNING:
THE ALTERATION OF THIS MATERIAL IN ANY WAY, UNLESS DONE UNDER THE DIRECTION OF A COMPARABLE PROFESSIONAL, I.E. ARCHITECT FOR AN ARCHITECT, ENGINEER FOR AN ENGINEER OR LANDSCAPE ARCHITECT FOR A LANDSCAPE ARCHITECT, IS A VIOLATION OF THE NEW YORK STATE EDUCATION LAW AND/OR REGULATIONS AND IS A CLASS 'A' MISDEMEANOR.

CONTRACT:
CONSTRUCTION

TITLE:
MAJOR BUILDING RENOVATIONS FOR THE MANHATTAN FORENSIC RELOCATION

LOCATION: MANHATTAN PSYCHIATRIC CENTER, BUILDING No. 102
600 EAST 125TH STREET WARDS ISLAND, NY 10035

CLIENT:
NYS OFFICE OF MENTAL HEALTH

MARK	DATE	DESCRIPTION
8	09/24/2015	ADDENDUM 8
	6-15-2015	BID DOCUMENT

PROJECT NUMBER:	44578
DESIGNED BY:	IL
DRAWN BY:	YD
FIELD CHECK:	N/A
APPROVED:	PL

SHEET TITLE:
HVAC SCHEDULES

BUILDING NUMBER: 102

DRAWING NUMBER: M-637-2

SHEET

9/22/2015 12:07:35 PM

FIRE SMOKE DAMPER SCHEDULE-2

TAG	SYSTEM SERVED	FLOOR	DAMPER TYPE	DAMPER AIRFLOW (CFM)	DAMPER DUCT HEIGHT (IN.)	DAMPER DUCT WIDTH (IN.)	DAMPER PRESSURE RATING (IN. W.G.)	ACTUATOR (5) CONTROL SIGNAL VOLTAGE (V)	ACTUATOR (4) SUPPLY VOLTAGE (V)	ACTUATOR FAILED POSITION	REMARKS
FSD-102-11-1	TEF-102-17-3	ELEVENTH FLOOR	FIRE & SMOKE DAMPER	200	6	10	4.00	24	120	CLOSED	
FSD-102-11-2	GEF-102-12-1	ELEVENTH FLOOR	FIRE & SMOKE DAMPER	2125	16	16	4.00	24	120	CLOSED	
FSD-102-11-3	TEF-102-17-1	ELEVENTH FLOOR	FIRE & SMOKE DAMPER	125	8	8	4.00	24	120	CLOSED	
FSD-102-11-4	TEF-102-17-1	ELEVENTH FLOOR	FIRE & SMOKE DAMPER	125	6	8	4.00	24	120	CLOSED	
FSD-102-11-5	TEF-102-12-1	ELEVENTH FLOOR	FIRE & SMOKE DAMPER	200	8	8	4.00	24	120	CLOSED	
FSD-102-11-6	TEF-102-12-1	ELEVENTH FLOOR	FIRE & SMOKE DAMPER	3825	20	16	4.00	24	120	CLOSED	
FSD-102-11-7	TEF-102-18-1	ELEVENTH FLOOR	FIRE & SMOKE DAMPER	50	8	8	4.00	24	120	CLOSED	
FSD-102-11-8	LEF-102-18-1	ELEVENTH FLOOR	FIRE & SMOKE DAMPER	200	8	8	4.00	24	120	CLOSED	
FSD-102-11-9	TEF-102-18-1	ELEVENTH FLOOR	FIRE & SMOKE DAMPER	600	8	16	4.00	24	120	CLOSED	
FSD-102-11-10	AHU-102-11-1	ELEVENTH FLOOR	FIRE & SMOKE DAMPER	115	6	10	4.00	24	120	CLOSED	
FSD-102-11-11	AHU-102-11-1	ELEVENTH FLOOR	FIRE & SMOKE DAMPER	150	8	8	4.00	24	120	CLOSED	
FSD-102-11-12	AHU-102-11-1	ELEVENTH FLOOR	FIRE & SMOKE DAMPER	1920	12	22	4.00	24	120	CLOSED	
FSD-102-11-13	AHU-102-11-1	ELEVENTH FLOOR	FIRE & SMOKE DAMPER	75	8	8	4.00	24	120	CLOSED	
FSD-102-11-14	AHU-102-11-1	ELEVENTH FLOOR	FIRE & SMOKE DAMPER	75	8	8	4.00	24	120	CLOSED	
FSD-102-11-15	TEF-102-17-2	ELEVENTH FLOOR	FIRE & SMOKE DAMPER	125	6	10	4.00	24	120	CLOSED	
FSD-102-11-16	RF-102-11-1	ELEVENTH FLOOR	FIRE & SMOKE DAMPER	2495	22	38	4.00	24	120	CLOSED	
FSD-102-11-17	GEF-102-12-1	ELEVENTH FLOOR	FIRE & SMOKE DAMPER	2125	16	16	4.00	24	120	CLOSED	
FSD-102-12-1	GEF-102-17-1	TWELFTH FLOOR	FIRE & SMOKE DAMPER	600	10	12	4.00	24	120	CLOSED	
FSD-102-12-2	TEF-102-17-3	TWELFTH FLOOR	FIRE & SMOKE DAMPER	300	6	10	4.00	24	120	CLOSED	
FSD-102-12-3	TEF-102-18-1	TWELFTH FLOOR	FIRE & SMOKE DAMPER	725	14	10	4.00	24	120	CLOSED	
FSD-102-12-4	TEF-102-18-1	TWELFTH FLOOR	FIRE & SMOKE DAMPER	675	16	8	4.00	24	120	CLOSED	
FSD-102-12-5	AHU-102-12-1	TWELFTH FLOOR	FIRE & SMOKE DAMPER	210	8	10	4.00	24	120	CLOSED	
FSD-102-12-6	RF-102-12-1	TWELFTH FLOOR	FIRE & SMOKE DAMPER	345	6	8	4.00	24	120	CLOSED	
FSD-102-12-7	AHU-102-12-1	TWELFTH FLOOR	FIRE & SMOKE DAMPER	170	6	10	4.00	24	120	CLOSED	
FSD-102-12-8	RF-102-12-1	TWELFTH FLOOR	FIRE & SMOKE DAMPER	9600	16	28	4.00	24	120	CLOSED	
FSD-102-12-9	AHU-102-12-1	TWELFTH FLOOR	FIRE & SMOKE DAMPER	3665	14	26	4.00	24	120	CLOSED	
FSD-102-12-10	TEF-102-17-3	TWELFTH FLOOR	FIRE & SMOKE DAMPER	300	6	10	4.00	24	120	CLOSED	
FSD-102-12-11	GEF-102-17-1	TWELFTH FLOOR	FIRE & SMOKE DAMPER	300	8	10	4.00	24	120	CLOSED	
FSD-102-13-1	GEF-102-17-1	THIRTEENTH FLOOR	FIRE & SMOKE DAMPER	600	10	12	4.00	24	120	CLOSED	
FSD-102-13-2	GEF-102-17-1	THIRTEENTH FLOOR	FIRE & SMOKE DAMPER	600	10	12	4.00	24	120	CLOSED	
FSD-102-13-3	TEF-102-17-3	THIRTEENTH FLOOR	FIRE & SMOKE DAMPER	1585	14	12	4.00	24	120	CLOSED	
FSD-102-13-4	TEF-102-17-3	THIRTEENTH FLOOR	FIRE & SMOKE DAMPER	1810	14	16	4.00	24	120	CLOSED	
FSD-102-13-5	TEF-102-17-2	THIRTEENTH FLOOR	FIRE & SMOKE DAMPER	1150	12	16	4.00	24	120	CLOSED	
FSD-102-13-6	TEF-102-17-2	THIRTEENTH FLOOR	FIRE & SMOKE DAMPER	1150	12	16	4.00	24	120	CLOSED	
FSD-102-13-7	TEF-102-18-1	THIRTEENTH FLOOR	FIRE & SMOKE DAMPER	50	8	8	4.00	24	120	CLOSED	
FSD-102-13-8	AHU-102-13-1	THIRTEENTH FLOOR	FIRE & SMOKE DAMPER	105	6	8	4.00	24	120	CLOSED	
FSD-102-13-9	RF-102-13-1	THIRTEENTH FLOOR	FIRE & SMOKE DAMPER	4040	18	32	4.00	24	120	CLOSED	
FSD-102-13-10	AHU-102-13-1	THIRTEENTH FLOOR	FIRE & SMOKE DAMPER	3095	12	28	4.00	24	120	CLOSED	
FSD-102-13-11	TEF-102-17-3	THIRTEENTH FLOOR	FIRE & SMOKE DAMPER	300	8	10	4.00	24	120	CLOSED	
FSD-102-14-1	AHU-102-15-1	FOURTEENTH FLOOR	FIRE & SMOKE DAMPER	3500	38	12	8.00	24	120	CLOSED	
FSD-102-14-2	GEF-102-17-1	FOURTEENTH FLOOR	FIRE & SMOKE DAMPER	200	6	10	4.00	24	120	CLOSED	
FSD-102-14-3	TEF-102-17-3	FOURTEENTH FLOOR	FIRE & SMOKE DAMPER	225	6	10	4.00	24	120	CLOSED	
FSD-102-14-4	AHU-102-15-1	FOURTEENTH FLOOR	FIRE & SMOKE DAMPER	3500	38	12	8.00	24	120	CLOSED	
FSD-102-14-5	TEF-102-18-1	FOURTEENTH FLOOR	FIRE & SMOKE DAMPER	50	8	8	4.00	24	120	CLOSED	
FSD-102-14-6	AHU-102-15-2	FOURTEENTH FLOOR	FIRE & SMOKE DAMPER	8000	16	36	8.00	24	120	CLOSED	
FSD-102-14-7	AHU-102-15-2	FOURTEENTH FLOOR	FIRE & SMOKE DAMPER	6800	20	34	8.00	24	120	CLOSED	
FSD-102-14-8	AHU-102-15-2	FOURTEENTH FLOOR	FIRE & SMOKE DAMPER	7860	16	36	4.00	24	120	CLOSED	
FSD-102-14-9	AHU-102-15-2	FOURTEENTH FLOOR	FIRE & SMOKE DAMPER	6490	20	34	4.00	24	120	CLOSED	
FSD-102-15-1	AHU-102-15-1	FIFTEENTH FLOOR	FIRE & SMOKE DAMPER	3500	20	20	8.00	24	120	CLOSED	
FSD-102-15-2	GEF-102-17-1	FIFTEENTH FLOOR	FIRE & SMOKE DAMPER	800	12	12	4.00	24	120	CLOSED	
FSD-102-15-3	TEF-102-17-3	FIFTEENTH FLOOR	FIRE & SMOKE DAMPER	1475	14	16	4.00	24	120	CLOSED	
FSD-102-15-4	TEF-102-17-2	FIFTEENTH FLOOR	FIRE & SMOKE DAMPER	1150	12	16	4.00	24	120	CLOSED	
FSD-102-15-5	AHU-102-15-2	FIFTEENTH FLOOR	FIRE & SMOKE DAMPER	8000	16	36	4.00	24	120	CLOSED	
FSD-102-15-6	AHU-102-15-2	FIFTEENTH FLOOR	FIRE & SMOKE DAMPER	6800	20	34	4.00	24	120	CLOSED	
FSD-102-15-7	TEF-102-17-1	FIFTEENTH FLOOR	FIRE & SMOKE DAMPER	3550	18	16	6.00	24	120	CLOSED	
FSD-102-15-8	AHU-102-15-1	FIFTEENTH FLOOR	FIRE & SMOKE DAMPER	3500	20	20	8.00	24	120	CLOSED	
FSD-102-15-9	RF-102-15-1	FIFTEENTH FLOOR	FIRE & SMOKE DAMPER	4800	42	42	4.00	24	120	CLOSED	
FSD-102-16-1	GEF-102-17-1	SIXTEENTH FLOOR	FIRE & SMOKE DAMPER	1400	16	16	4.00	24	120	CLOSED	
FSD-102-16-2	TEF-102-17-3	SIXTEENTH FLOOR	FIRE & SMOKE DAMPER	1675	14	18	4.00	24	120	CLOSED	
FSD-102-16-3	TEF-102-17-2	SIXTEENTH FLOOR	FIRE & SMOKE DAMPER	1150	12	16	4.00	24	120	CLOSED	
FSD-102-16-4	TEF-102-17-1	SIXTEENTH FLOOR	FIRE & SMOKE DAMPER	3550	16	20	6.00	24	120	CLOSED	
FSD-102-16-5	TEF-102-18-1	SIXTEENTH FLOOR	FIRE & SMOKE DAMPER	1615	22	10	4.00	24	120	CLOSED	
FSD-102-16-6	LEF-102-18-1	SIXTEENTH FLOOR	FIRE & SMOKE DAMPER	1800	16	14	6.00	24	120	CLOSED	
FSD-102-16-7	SPF-102-16-1	SIXTEENTH FLOOR	FIRE & SMOKE DAMPER	11520	36	22	4.00	24	120	CLOSED	
FSD-102-17-1	TEF-102-18-1	SEVENTEENTH FLOOR	FIRE & SMOKE DAMPER	340	12	8	4.00	24	120	CLOSED	
FSD-102-17-2	TEF-102-18-1	SEVENTEENTH FLOOR	FIRE & SMOKE DAMPER	1615	22	10	4.00	24	120	CLOSED	
FSD-102-17-3	LEF-102-18-1	SEVENTEENTH FLOOR	FIRE & SMOKE DAMPER	1800	16	14	6.00	24	120	CLOSED	
FSD-102-18-1	LEF-102-18-1	EIGHTEENTH FLOOR	FIRE & SMOKE DAMPER	1800	16	14	6.00	24	120	CLOSED	
8 FSD-102-18-2	TEF-102-18-1	EIGHTEENTH FLOOR	FIRE & SMOKE DAMPER	1615	16	16	4.00	24	120	CLOSED	
FSD-102-B-2	AHU-102-B-3	BASEMENT	FIRE & SMOKE DAMPER	2280	10	30	8.00	24	120	CLOSED	
FSD-102-B-3	AHU-102-B-3	BASEMENT	FIRE & SMOKE DAMPER	3970	20	28	8.00	24	120	CLOSED	
FSD-102-B-4	AHU-102-B-3	BASEMENT	FIRE & SMOKE DAMPER	2180	10	30	8.00	24	120	CLOSED	
FSD-102-B-5	AHU-102-2-1	BASEMENT	FIRE & SMOKE DAMPER	8995	24	44	8.00	24	120	CLOSED	
FSD-102-B-6	AHU-102-2-1	BASEMENT	FIRE & SMOKE DAMPER	10210	24	40	8.00	24	120	CLOSED	
FSD-102-B-7	TEF-102-17-2	BASEMENT	FIRE & SMOKE DAMPER	150	8	8	4.00	24	120	CLOSED	
FSD-102-B-8	GEF-102-12-1	BASEMENT	FIRE & SMOKE DAMPER	330	10	10	4.00	24	120	CLOSED	
FSD-102-B-9	TEF-102-12-1	BASEMENT	FIRE & SMOKE DAMPER	75	6	12	4.00	24	120	CLOSED	
FSD-102-B-10	AHU-102-B-1	BASEMENT	FIRE & SMOKE DAMPER	4000	30	12	8.00	24	120	CLOSED	
FSD-102-B-11	AHU-102-3-3	BASEMENT	FIRE & SMOKE DAMPER	4190	20	28	10.00	24	120	CLOSED	
FSD-102-B-12	TEF-102-3-1	BASEMENT	FIRE & SMOKE DAMPER	2390	24	12	4.00	24	120	CLOSED	
FSD-102-B-13	AHU-102-3-3	BASEMENT	FIRE & SMOKE DAMPER	5670	16	30	10.00	24	120	CLOSED	

NOTES:

1. PROVIDE OUT-OF-WALL INSTALLATION WHERE REQUIRED WITH RATED THERMAL BLANKET.
2. COORDINATE DAMPER MOUNTING WITH PLANS.
3. FOR END SWITCH REQUIREMENTS REFER TO CONTROL DRAWINGS M-621 TO M-629 AND SPECIFICATIONS.
4. SUPPLY VOLTAGE SHALL BE FROM EMERGENCY POWER PANEL OR UPS.
5. CONTROL SIGNAL VOLTAGE FROM FIRE ALARM.
6. CONTRACTOR SHALL FIELD MEASURE ALL OPENINGS FOR COMBINATION FIRE SMOKE DAMPERS AND SMOKE DAMPERS AND SIZE THE DIMENSIONS OF THE DAMPER AS APPROPRIATE FOR FLOOR MOUNTED HORIZONTAL DAMPERS TO FIT THE OPENING AND MAINTAIN PROPER UL RATED AND CODE APPROVED ASSEMBLY.
7. FSD-102-B-1 NOT USED 8

8 REVISED DRAWING 09/24/2015

NEW YORK STATE OF OPPORTUNITY. Office of General Services

DESIGN & CONSTRUCTION

CONSULTANTS:

RBSD ARCHITECTS P.C. | STV 100 Years

A Joint Venture

225 Park Avenue South
New York, New York 10003

WARNING:
THE ALTERATION OF THIS MATERIAL IN ANY WAY, UNLESS DONE UNDER THE DIRECTION OF A COMPARABLE PROFESSIONAL, I.E. ARCHITECT FOR AN ARCHITECT, ENGINEER FOR AN ENGINEER OR LANDSCAPE ARCHITECT FOR A LANDSCAPE ARCHITECT, IS A VIOLATION OF THE NEW YORK STATE EDUCATION LAW AND/OR REGULATIONS AND IS A CLASS 'A' MISDEMEANOR.

CONTRACT:
CONSTRUCTION

TITLE:
MAJOR BUILDING RENOVATIONS FOR THE MANHATTAN FORENSIC RELOCATION

LOCATION: MANHATTAN PSYCHIATRIC CENTER, BUILDING No. 102
600 EAST 125TH STREET WARDS ISLAND, NY 10035

CLIENT:
NYS OFFICE OF MENTAL HEALTH

MARK	DATE	DESCRIPTION
8	09/24/2015	ADDENDUM 8
	6-15-2015	BID DOCUMENT

PROJECT NUMBER:	44578
DESIGNED BY:	IL
DRAWN BY:	YD
FIELD CHECK:	N/A
APPROVED:	PL

SHEET TITLE:
HVAC SCHEDULES

BUILDING NUMBER: 102

DRAWING NUMBER: M-643-2

SHEET

9/22/2015 12:07:41 PM

SMOKE DAMPER SCHEDULE

TAG	SYSTEM SERVED	FLOOR	TYPE	AIRFLOW (CFM)	DUCT HEIGHT (IN.)	DUCT WIDTH (IN.)	MAX. SYSTEM PRESSURE (IN. W.G.)	(5) CONTROL SIGNAL VOLTAGE (V)	(4) SUPPLY VOLTAGE (V)	FAILED POSITION	REMARKS
SD-102-1-1	AHU-102-2-1	FIRST FLOOR	SMOKE DAMPER	3910 CFM	14	26	4.00 in-wg	24 V	120 V	CLOSED	
SD-102-1-2	GEF-102-2-1	FIRST FLOOR	SMOKE DAMPER	1830 CFM	16	16	4.00 in-wg	24 V	120 V	CLOSED	
SD-102-1-3	TEF-102-17-1	FIRST FLOOR	SMOKE DAMPER	365 CFM	8	10	4.00 in-wg	24 V	120 V	CLOSED	
SD-102-1-4	TEF-102-3-3	FIRST FLOOR	SMOKE DAMPER	350 CFM	8	10	4.00 in-wg	24 V	120 V	CLOSED	
SD-102-1-5	AHU-102-2-1	FIRST FLOOR	SMOKE DAMPER	965 CFM	8	12	4.00 in-wg	24 V	120 V	CLOSED	
SD-102-1-6	AHU-102-2-1	FIRST FLOOR	SMOKE DAMPER	240 CFM	6	10	4.00 in-wg	24 V	120 V	CLOSED	
SD-102-1-7	AHU-102-2-1	FIRST FLOOR	SMOKE DAMPER	685 CFM	10	16	4.00 in-wg	24 V	120 V	CLOSED	
SD-102-2-1	AHU-102-2-1	SECOND FLOOR	SMOKE DAMPER	16500 CFM	26	60	8.00 in-wg	24 V	120 V	CLOSED	PROVIDED BY AHU MFG
SD-102-2-2	AHU-102-2-1	SECOND FLOOR	SMOKE DAMPER	17500 CFM	84	24	8.00 in-wg	24 V	120 V	CLOSED	PROVIDED BY AHU MFG
SD-102-2-3	AHU-102-3-1	SECOND FLOOR	SMOKE DAMPER	1975 CFM	10	28	4.00 in-wg	24 V	120 V	CLOSED	
SD-102-2-4	AHU-102-3-1	SECOND FLOOR	SMOKE DAMPER	2125 CFM	10	22	4.00 in-wg	24 V	120 V	CLOSED	
SD-102-3-1	AHU-102-3-2	THIRD FLOOR	SMOKE DAMPER	10185 CFM	18	54	4.00 in-wg	24 V	120 V	CLOSED	
SD-102-3-2	AHU-102-3-2	THIRD FLOOR	SMOKE DAMPER	1000 CFM	14	8	4.00 in-wg	24 V	120 V	CLOSED	
SD-102-3-3	AHU-102-3-2	THIRD FLOOR	SMOKE DAMPER	12470 CFM	16	46	4.00 in-wg	24 V	120 V	CLOSED	
SD-102-3-4	AHU-102-3-2	THIRD FLOOR	SMOKE DAMPER	13500 CFM	20	66	8.00 in-wg	24 V	120 V	CLOSED	PROVIDED BY AHU MFG
SD-102-3-5	AHU-102-3-2	THIRD FLOOR	SMOKE DAMPER	16500 CFM	36	72	8.00 in-wg	24 V	120 V	CLOSED	PROVIDED BY AHU MFG
SD-102-3-6	DVF-102-18-1	THIRD FLOOR	SMOKE DAMPER	400 CFM	14	14	4.00 in-wg	24 V	120 V	CLOSED	
SD-102-4-1	AHU-102-4-1	FOURTH FLOOR	SMOKE DAMPER	10550 CFM	18	54	4.00 in-wg	24 V	120 V	CLOSED	
SD-102-4-2	AHU-102-4-1	FOURTH FLOOR	SMOKE DAMPER	1000 CFM	14	8	4.00 in-wg	24 V	120 V	CLOSED	
SD-102-4-3	AHU-102-4-1	FOURTH FLOOR	SMOKE DAMPER	12470 CFM	16	46	4.00 in-wg	24 V	120 V	CLOSED	
SD-102-4-4	RF-102-4-1	FOURTH FLOOR	SMOKE DAMPER	400 CFM	12	16	4.00 in-wg	24 V	120 V	CLOSED	
SD-102-4-5	DVF-102-18-1	FOURTH FLOOR	SMOKE DAMPER	400 CFM	14	14	4.00 in-wg	24 V	120 V	CLOSED	
SD-102-5-1	AHU-102-5-1	FIFTH FLOOR	SMOKE DAMPER	10550 CFM	18	54	4.00 in-wg	24 V	120 V	CLOSED	
SD-102-5-2	AHU-102-5-1	FIFTH FLOOR	SMOKE DAMPER	1000 CFM	14	8	4.00 in-wg	24 V	120 V	CLOSED	
SD-102-5-3	AHU-102-5-1	FIFTH FLOOR	SMOKE DAMPER	12470 CFM	16	46	4.00 in-wg	24 V	120 V	CLOSED	
SD-102-5-4	DVF-102-18-1	FIFTH FLOOR	SMOKE DAMPER	400 CFM	14	14	4.00 in-wg	24 V	120 V	CLOSED	
SD-102-6-1	AHU-102-6-1	SIXTH FLOOR	SMOKE DAMPER	10270 CFM	18	54	4.00 in-wg	24 V	120 V	CLOSED	
SD-102-6-2	AHU-102-6-1	SIXTH FLOOR	SMOKE DAMPER	1000 CFM	14	8	4.00 in-wg	24 V	120 V	CLOSED	
SD-102-6-3	AHU-102-6-1	SIXTH FLOOR	SMOKE DAMPER	12080 CFM	16	46	4.00 in-wg	24 V	120 V	CLOSED	
SD-102-6-4	RF-102-6-1	SIXTH FLOOR	SMOKE DAMPER	400 CFM	12	16	4.00 in-wg	24 V	120 V	CLOSED	
SD-102-6-5	DVF-102-18-1	SIXTH FLOOR	SMOKE DAMPER	400 CFM	14	14	4.00 in-wg	24 V	120 V	CLOSED	
SD-102-7-1	AHU-102-7-1	SEVENTH FLOOR	SMOKE DAMPER	10270 CFM	18	54	4.00 in-wg	24 V	120 V	CLOSED	
SD-102-7-2	AHU-102-7-1	SEVENTH FLOOR	SMOKE DAMPER	1000 CFM	14	8	4.00 in-wg	24 V	120 V	CLOSED	
SD-102-7-3	AHU-102-7-1	SEVENTH FLOOR	SMOKE DAMPER	12080 CFM	16	46	4.00 in-wg	24 V	120 V	CLOSED	
SD-102-7-4	DVF-102-18-1	SEVENTH FLOOR	SMOKE DAMPER	400 CFM	14	14	4.00 in-wg	24 V	120 V	CLOSED	
SD-102-8-1	AHU-102-8-1	EIGHTH FLOOR	SMOKE DAMPER	10270 CFM	18	54	4.00 in-wg	24 V	120 V	CLOSED	
SD-102-8-2	AHU-102-8-1	EIGHTH FLOOR	SMOKE DAMPER	1000 CFM	14	8	4.00 in-wg	24 V	120 V	CLOSED	
SD-102-8-3	AHU-102-8-1	EIGHTH FLOOR	SMOKE DAMPER	12080 CFM	16	46	4.00 in-wg	24 V	120 V	CLOSED	
SD-102-8-4	RF-102-8-1	EIGHTH FLOOR	SMOKE DAMPER	400 CFM	12	16	4.00 in-wg	24 V	120 V	CLOSED	
SD-102-8-5	DVF-102-18-1	EIGHTH FLOOR	SMOKE DAMPER	400 CFM	14	14	4.00 in-wg	24 V	120 V	CLOSED	
SD-102-9-1	AHU-102-9-1	NINTH FLOOR	SMOKE DAMPER	10270 CFM	18	54	4.00 in-wg	24 V	120 V	CLOSED	
SD-102-9-2	AHU-102-9-1	NINTH FLOOR	SMOKE DAMPER	1000 CFM	14	8	4.00 in-wg	24 V	120 V	CLOSED	
SD-102-9-3	AHU-102-9-1	NINTH FLOOR	SMOKE DAMPER	12080 CFM	16	46	4.00 in-wg	24 V	120 V	CLOSED	
SD-102-9-4	DVF-102-18-1	NINTH FLOOR	SMOKE DAMPER	400 CFM	14	14	4.00 in-wg	24 V	120 V	CLOSED	
SD-102-10-1	AHU-102-10-1	TENTH FLOOR	SMOKE DAMPER	10270 CFM	18	54	4.00 in-wg	24 V	120 V	CLOSED	
SD-102-10-2	AHU-102-10-1	TENTH FLOOR	SMOKE DAMPER	1000 CFM	14	8	4.00 in-wg	24 V	120 V	CLOSED	
SD-102-10-3	AHU-102-10-1	TENTH FLOOR	SMOKE DAMPER	12080 CFM	16	46	4.00 in-wg	24 V	120 V	CLOSED	
SD-102-10-4	RF-102-10-1	TENTH FLOOR	SMOKE DAMPER	400 CFM	12	16	4.00 in-wg	24 V	120 V	CLOSED	
SD-102-10-5	DVF-102-18-1	TENTH FLOOR	SMOKE DAMPER	400 CFM	14	14	4.00 in-wg	24 V	120 V	CLOSED	
SD-102-11-1	AHU-102-11-1	ELEVENTH FLOOR	SMOKE DAMPER	10270 CFM	18	54	4.00 in-wg	24 V	120 V	CLOSED	
SD-102-11-2	AHU-102-11-1	ELEVENTH FLOOR	SMOKE DAMPER	1000 CFM	14	8	4.00 in-wg	24 V	120 V	CLOSED	
SD-102-11-3	AHU-102-11-1	ELEVENTH FLOOR	SMOKE DAMPER	12080 CFM	16	46	4.00 in-wg	24 V	120 V	CLOSED	
SD-102-11-4	DVF-102-18-1	ELEVENTH FLOOR	SMOKE DAMPER	400 CFM	14	14	4.00 in-wg	24 V	120 V	CLOSED	
SD-102-B-1	AHU-102-2-1	BASEMENT	SMOKE DAMPER	270 CFM	6	10	4.00 in-wg	24 V	120 V	CLOSED	
SD-102-B-2	AHU-102-2-1	BASEMENT	SMOKE DAMPER	1535 CFM	8	28	4.00 in-wg	24 V	120 V	CLOSED	
SD-102-B-3	AHU-102-2-1	BASEMENT	SMOKE DAMPER	270 CFM	6	10	4.00 in-wg	24 V	120 V	CLOSED	
SD-102-B-4	GEF-102-12-1	BASEMENT	SMOKE DAMPER	275 CFM	6	10	4.00 in-wg	24 V	120 V	CLOSED	
SD-102-B-5	AHU-102-2-1	BASEMENT	SMOKE DAMPER	625 CFM	6	20	4.00 in-wg	24 V	120 V	CLOSED	
SD-102-B-6	AHU-102-2-1	BASEMENT	SMOKE DAMPER	350 CFM	6	14	4.00 in-wg	24 V	120 V	CLOSED	
SD-102-B-7	AHU-102-2-1	BASEMENT	SMOKE DAMPER	50 CFM	6	10	4.00 in-wg	24 V	120 V	CLOSED	

SMOKE DAMPER SCHEDULE

TAG	SYSTEM SERVED	FLOOR	TYPE	AIRFLOW (CFM)	DUCT HEIGHT (IN.)	DUCT WIDTH (IN.)	MAX. SYSTEM PRESSURE (IN. W.G.)	(5) CONTROL SIGNAL VOLTAGE (V)	(4) SUPPLY VOLTAGE (V)	FAILED POSITION	REMARKS
SD-102-B-8	AHU-102-2-1	BASEMENT	SMOKE DAMPER	260 CFM	8	10	4.00 in-wg	24 V	120 V	CLOSED	
SD-102-B-9	AHU-102-2-1	BASEMENT	SMOKE DAMPER	700 CFM	10	8	4.00 in-wg	24 V	120 V	CLOSED	
SD-102-B-10	AHU-102-2-1	BASEMENT	SMOKE DAMPER	520 CFM	8	8	4.00 in-wg	24 V	120 V	CLOSED	
SD-102-B-11	GEF-102-3-1	BASEMENT	SMOKE DAMPER	1200 CFM	8	24	4.00 in-wg	24 V	120 V	CLOSED	
SD-102-B-12	GEF-102-3-1	BASEMENT	SMOKE DAMPER	1125 CFM	8	24	4.00 in-wg	24 V	120 V	CLOSED	
SD-102-B-13	AHU-102-B-2	BASEMENT	SMOKE DAMPER	515 CFM	8	14	4.00 in-wg	24 V	120 V	CLOSED	
SD-102-B-14	AHU-102-B-2	BASEMENT	SMOKE DAMPER	725 CFM	8	12	4.00 in-wg	24 V	120 V	CLOSED	
SD-102-B-15	AHU-102-2-1	BASEMENT	SMOKE DAMPER	6000 CFM	16	24	4.00 in-wg	24 V	120 V	CLOSED	
SD-102-B-16	AHU-102-2-1	BASEMENT	SMOKE DAMPER	2590 CFM	10	34	4.00 in-wg	24 V	120 V	CLOSED	

8

NOTES:

1. PROVIDE OUT-OF-WALL INSTALLATION WHERE REQUIRED WITH RATED THERMAL BLANKET.
2. COORDINATE DAMPER MOUNTING WITH PLANS.
3. FOR END SWITCH REQUIREMENTS REFER TO CONTROL DRAWINGS M-621 TO M-629 AND SPECIFICATIONS.
4. SUPPLY VOLTAGE SHALL BE FROM EMERGENCY POWER PANEL OR UPS.
5. CONTROL SIGNAL VOLTAGE FROM FIRE ALARM.
6. CONTRACTOR SHALL FIELD MEASURE ALL OPENINGS FOR COMBINATION FIRE SMOKE DAMPERS AND SMOKE DAMPERS AND SIZE THE DIMENSIONS OF THE DAMPER AS APPROPRIATE FOR FLOOR MOUNTED HORIZONTAL DAMPERS TO FIT THE OPENING AND MAINTAIN PROPER UL RATED AND CODE APPROVED ASSEMBLY.

8 REVISED DRAWING 09/24/2015

NEW YORK STATE OF OPPORTUNITY. Office of General Services

DESIGN & CONSTRUCTION

CONSULTANTS:

RBSD ARCHITECTS P.C. | STV 100 Years

A Joint Venture

225 Park Avenue South
New York, New York 10003

WARNING:
THE ALTERATION OF THIS MATERIAL IN ANY WAY, UNLESS DONE UNDER THE DIRECTION OF A COMPARABLE PROFESSIONAL, I.E. ARCHITECT FOR AN ARCHITECT, ENGINEER FOR AN ENGINEER OR LANDSCAPE ARCHITECT FOR A LANDSCAPE ARCHITECT, IS A VIOLATION OF THE NEW YORK STATE EDUCATION LAW AND/OR REGULATIONS AND IS A CLASS 'A' MISDEMEANOR.

CONTRACT: CONSTRUCTION

TITLE: MAJOR BUILDING RENOVATIONS FOR THE MANHATTAN FORENSIC RELOCATION

LOCATION: MANHATTAN PSYCHIATRIC CENTER, BUILDING No. 102
600 EAST 125TH STREET WARDS ISLAND, NY 10035

CLIENT: NYS OFFICE OF MENTAL HEALTH

MARK	DATE	DESCRIPTION
8	09/24/2015	ADDENDUM 8
	6-15-2015	BID DOCUMENT

PROJECT NUMBER:	44578
DESIGNED BY:	IL
DRAWN BY:	YD
FIELD CHECK:	N/A
APPROVED:	PL

SHEET TITLE: HVAC SCHEDULES

BUILDING NUMBER: 102

DRAWING NUMBER: M-644-2

SHEET

9/22/2015 12:07:44 PM

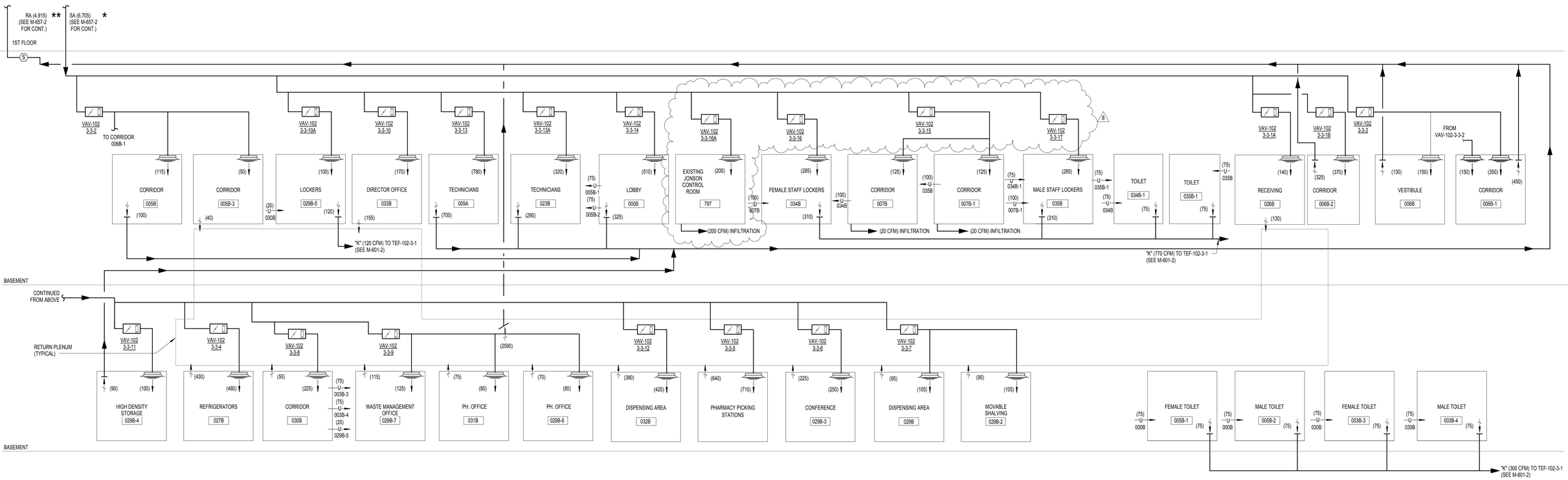

AHU-102-3-3 AIRFLOW DIAGRAM-SHEET 2

REFERENCE DWG#:
M-100-2C,2D & 2E

NOTE: *SUPPLY CFM INDICATED IS SUM OF MAXIMUM VAV's CFM.
**RETURN CFM INDICATED BASED ON SUPPLY CFM INDICATED.

8 REVISED DRAWING 09/24/2015

NEW YORK STATE OF OPPORTUNITY. Office of General Services

DESIGN & CONSTRUCTION

CONSULTANTS:

RBSD ARCHITECTS P.C. | STV 100 Years

A Joint Venture

225 Park Avenue South
New York, New York 10003

WARNING:
THE ALTERATION OF THIS MATERIAL IN ANY WAY, UNLESS DONE UNDER THE DIRECTION OF A COMPARABLE PROFESSIONAL, I.E. ARCHITECT FOR AN ARCHITECT, ENGINEER FOR AN ENGINEER OR LANDSCAPE ARCHITECT FOR A LANDSCAPE ARCHITECT, IS A VIOLATION OF THE NEW YORK STATE EDUCATION LAW AND/OR REGULATIONS AND IS A CLASS 'A' MISDEMEANOR.

CONTRACT: CONSTRUCTION

TITLE: MAJOR BUILDING RENOVATIONS FOR THE MANHATTAN FORENSIC RELOCATION

LOCATION: MANHATTAN PSYCHIATRIC CENTER, BUILDING No. 102
600 EAST 125TH STREET WARDS ISLAND, NY 10035

CLIENT: NYS OFFICE OF MENTAL HEALTH

MARK	DATE	DESCRIPTION
8	09/24/2015	ADDENDUM 8
	6-15-2015	BID DOCUMENT

PROJECT NUMBER:	44578
DESIGNED BY:	IL
DRAWN BY:	GI
FIELD CHECK:	N/A
APPROVED:	PL

SHEET TITLE: HVAC AIR FLOW DIAGRAM

BUILDING NUMBER: 102

DRAWING NUMBER: M-658-2

SHEET

9/22/2015 12:07:46 PM

GENERAL DEMOLITION NOTES:

1. CONTRACTOR SHALL FURNISH ALL LABOR, MATERIALS, EQUIPMENT, TOOLS, OBTAIN ALL PERMITS AND LICENSES AND PAY ALL REQUIRED FEES FOR PROJECT COMPLETION
2. IT IS THE RESPONSIBILITY OF THE CONTRACTOR TO CHECK AND VERIFY ALL EXISTING CONDITIONS. ANY DISCREPANCIES SHALL BE REPORTED TO THE OWNER'S REPRESENTATIVE BEFORE PROCEEDING WITH WORK. ANY WORK STARTED BEFORE CONSULTATION AND ACCEPTANCE BY THE OWNER'S REPRESENTATIVE SHALL BE THE SOLE RESPONSIBILITY OF CONTRACTOR WITHOUT ADDITIONAL COMPENSATION.
3. PERFORM ALL REMOVAL WORK AS SHOWN ON THE DRAWINGS TO PERFORM THE WORK. THE CONTRACTOR SHALL REMOVE AND DISPOSE OF DEBRIS IN ACCORDANCE WITH DIVISION 1 - GENERAL REQUIREMENTS OF THE SPECIFICATIONS AS WELL AS WITH ALL RULES, REGULATIONS, CODES, AND LAWS; FEDERAL, STATE & LOCAL.
4. CONTRACTOR SHALL KEEP WORK SITE FREE FROM DEBRIS AND ACCUMULATED REFUSE, AND SHALL HAVE SOLE RESPONSIBILITY FOR PROTECTING ALL DANGEROUS AREAS FROM ENTRY BY UNAUTHORIZED PARTIES. SITE SHALL BE LEFT BROOM CLEAN AT THE END OF EACH WORKING DAY
5. ANY DEVICE INTERFERING WITH DEMOLITION WORK NOT SHOWN ON THESE DRAWINGS SHALL NOT BE REMOVED WITHOUT WRITTEN AUTHORIZATION FROM THE OWNER'S REPRESENTATIVE.
6. USE OF THE OWNER'S BUILDING CORRIDORS FOR HANDLING OF REMOVED EQUIPMENT AND MATERIALS SHALL BE AT THE DIRECTION OF THE OWNER AND SHALL BE COORDINATED WITH HIS OPERATIONS. USE OF THE OWNER'S ELEVATORS SHALL NOT BE PERMITTED.
7. THE CONTRACTOR SHALL BE RESPONSIBLE FOR COORDINATING ALL DEMOLITION WORK WITH ALL OTHER TRADES AND FOR MEANS AND METHODS NECESSARY TO COMPLETE THE WORK.
8. THE CONTRACTOR SHALL FILL AND PATCH PIPE AND DUCT HOLES RESULTING FROM DEMOLITION, INCLUDING THOSE FROM MOUNTINGS AND HANGERS, AND ANY OTHER EXISTING FLOOR PENETRATIONS WITH A 2-HOUR RATED UL-APPROVED ASSEMBLY. DO NOT FILL AND PATCH HOLES IN WALLS SLATED FOR DEMOLITION.
9. WHERE EXISTING PARTITIONS ARE DAMAGED IN AREAS OF SELECTIVE DEMOLITION BY THE REMOVAL OF EXISTING WALL/PARTITION OR ANY OTHER DEMOLITION ACTION, THE CONTRACTOR SHALL BE RESPONSIBLE TO REPAIR EXISTING WALL AND/OR FLOOR SURFACES TO MATCH EXISTING OR TO PRODUCE A SMOOTH SURFACE TO RECEIVE NEW FINISHES.
10. THE CONTRACTOR SHALL SUBMIT PROPOSED METHODS AND OPERATIONS OF THE DEMOLITION TO THE OWNER OR OWNER'S REP PRIOR TO THE START OF WORK. INCLUDE A SCHEDULE FOR COORDINATION OF SHUTOFFS, SERVICE INTERRUPTION, CAPPING, ETC.
11. THIS CONTRACTOR SHALL BE RESPONSIBLE FOR ALL CUTTING, PATCHING AND GENERAL CONTRACTOR WORK. REFER TO ALL ARCHITECTURAL, CIVIL, MEP & FP DRAWINGS AND PROVIDE ALL WORK NECESSARY TO CUT, PATCH, REPAIR, CAULK, SEAL, ETC.
12. COMPLY WITH GOVERNING EPA NOTIFICATION REGULATIONS BEFORE BEGINNING SELECTIVE DEMOLITION. COMPLY WITH HAULING REGULATIONS OF AUTHORITIES HAVING JURISDICTION.
13. OWNER ASSUMES NO RESPONSIBILITY FOR CONDITION OF AREAS TO BE SELECTIVELY DEMOLISHED
14. IF MATERIALS SUSPECTED OF CONTAINING HAZARDOUS MATERIALS ARE ENCOUNTERED, DO NOT DISTURB; IMMEDIATELY NOTIFY ARCHITECT AND OWNER.
15. MAINTAIN UTILITY SERVICES INDICATED TO REMAIN AND PROTECT THEM AGAINST DAMAGE DURING SELECTIVE DEMOLITION OPERATIONS.
16. DEMOLITION CONTRACTOR TO PROTECT EXISTING FLOORING DURING DEMO WORK, UNLESS OTHERWISE NOTED.
17. REFER TO ARCHITECTURAL, CIVIL, ELECTRICAL, PLUMBING & FIRE PROTECTION DRAWINGS FOR ADDITIONAL DEMOLITION ITEMS
18. WINDOW AC UNITS REMOVED WILL BE TURNED OVER TO THE OWNER. ALL OTHER ITEMS AND EQUIPMENT TO BE REMOVED SHALL BE REMOVED OFFSITE AND DISPOSED OF BY THE CONTRACTOR.
19. REMOVAL AND DISPOSAL OF EXISTING DUCTWORK, PIPING, EQUIPMENT AND CONSTRUCTION DEBRIS FROM THE SITE IS THE RESPONSIBILITY OF THE CONTRACTOR.
20. REMOVE ALL DUCTWORK, PIPING, HANGERS, SUPPORTS, ETC. AS SHOWN. PRIOR TO REMOVAL OF PIPING, PIPING SYSTEM SHALL BE PROPERLY DRAINED.
21. DURING CONSTRUCTION ALL DAMAGED FIRE PROOFING AT HANGERS AND SUPPORTS SHALL BE REPAIRED AS REQUIRED.
22. WHERE DUCTWORK IS CALLED TO BE EITHER CAPPED OR PATCHED, CONTRACTOR SHALL CAP OR PATCH HOLE IN REMAINING DUCTWORK WITH A SHEET METAL PLATE AND SEAL WITH MINNESOTA MINING CO. EC-800 SEALANT OR EQUIVALENT. CONTRACTOR TO CHECK ALL EXISTING TO REMAIN DUCTWORK FOR ANY AIR LEAKAGES AT SEAMS, JOINTS, ELBOWS, DUCT CONNECTIONS, ETC. AND SHALL SEAL WITH EC-SEALANT.
23. ALL SHUT DOWNS OF EXISTING SYSTEMS SHALL BE SCHEDULED AND APPROVED BY THE OWNER PRIOR TO COMMENCING WITH WORK.
24. ALL EXISTING MEP EQUIPMENT TO REMAIN SHALL BE PROTECTED FROM DAMAGE. THE CONTRACTOR SHALL ASSUME FULL RESPONSIBILITY FOR DAMAGE AND SHALL MAKE REPAIRS REQUIRED WITHOUT ADDITIONAL COST TO THE OWNER. WHERE INCONSISTENCIES OCCUR BETWEEN THE DEMOLITION PLANS AND THE ACTUAL FIELD CONDITIONS, THE CONTRACTOR SHALL CONSULT STV PRIOR TO DEMOLITION OF THE SPECIFIC ITEM.
25. DURING DEMOLITION, THIS CONTRACTOR SHALL MAINTAIN CONTINUITY OF ALL SERVICES, CIRCUITS, COMMUNICATIONS, LIFE SAFETY, HEATING, VENTILATION, AIR CONDITIONING, PNEUMATIC CONTROLS ETC. IN EXISTING AREAS THAT ARE TO REMAIN IN SERVICE THROUGHOUT DEMOLITION AND CONSTRUCTION. PROVIDE TEMPORARY AND/OR DUPLICATE SERVICES WHERE NECESSARY.
26. AFTER REMOVAL OF DUCTWORK, PIPING OR ANY OTHER HVAC EQUIPMENT, PATCH OPENINGS TO MATCH EXISTING CONSTRUCTION AND FINISH INCLUDING FIRE RESISTANCE RATING.
27. ANY DAMAGE BY THIS CONTRACTOR CAUSED TO ASBESTOS INSULATION THAT IS TO REMAIN IN PLACE AND NOT PART OF THE WORK SHALL BE REPAIRED AT HIS OWN EXPENSE.
28. MECHANICAL CONTRACTOR SHALL COORDINATE DEMOLITION OF ELECTRICALLY POWERED MECHANICAL EQUIPMENT WITH ELECTRICAL CONTRACTOR.
29. ALL SECTIONS OF PIPING AND DUCTWORK DISTRIBUTION SYSTEM AND EQUIPMENT PIPING THAT WAS ABANDONED IN PLACE SHALL BE CAPPED AND SEALED.
30. ALL MECHANICAL SERVICES/DEVICES INTERFERING WITH DEMOLITION WORK THAT WILL NOT BE KEPT IN SERVICE SHALL BE DISCONNECTED, REMOVED BACK TO THE CLOSEST RISER/SOURCE AND CAPPED ACCORDINGLY UNLESS OTHERWISE NOTED.(INCLUDING PREVIOUSLY ABANDONED SERVICES.)
31. UTILITY PIPING THAT IS TO BE REMOVED TO FACILITATE THE RENOVATIONS SHALL BE TERMINATED AS CLOSE TO THE SOURCE AS POSSIBLE. DEAD END PIPING SHALL NOT EXCEED TWO FEET.
32. TEMPORARY HEATING PROVIDED UNDER BID PACKAGE 1 CONTRACT. CONTRACTOR SHALL PROVIDE ADDITIONAL TEMPORARY HEATING TO MAINTAIN A MINIMUM 50°F IN WORK AREAS AS NECESSARY.
33. CONTRACTOR SHALL COORDINATE DEMOLITION OF MECHANICAL EQUIPMENT, DUCTWORK, AND PIPING WITH STRUCTURAL SLAB DEMOLITION AND REINFORCEMENT WORK. REFER TO STRUCTURAL PLANS FOR STRUCTURAL SLAB DEMOLITION. DEMOLITION OF STRUCTURAL SLAB IN AREAS WITH STEAM RADIATORS AND RISERS REQUIRE THE DEMOLITION OF THE STEAM RADIATOR AND RISERS IN AND/OR AFFECTED BY THE SLAB DEMOLITION AREA, WHICH ALSO REQUIRES DECOMMISSIONING OF ALL STEAM RADIATORS CONNECTED TO THE AFFECTED RISER ON UPPER FLOORS, AND PROVISIONS FOR ADEQUATE TEMPORARY HEATING.
34. THE CONTRACTOR SHALL BE RESPONSIBLE FOR MAINTAINING THE OPERATION OF EXISTING TO REMAIN STEAM SYSTEMS, INCLUDING PIPING, VALVES, TRAPS, RADIATORS, AND PUMPS IN AREAS AFFECTED BY WORK WHILE ANY SYSTEM ISOLATION, SHUT-DOWN, OR WORK IS ONGOING. WHEN THE HEATING PIPING SYSTEMS AND RADIATORS TO BE DEMOLISHED ARE NOT FUNCTIONING, SHUT DOWN, OR DEMOLISHED THE CONTRACTOR SHALL PROVIDE ADEQUATE SUPPLEMENTAL TEMPORARY HEATING TO ALL AFFECTED AREAS AS NECESSARY. BEFORE THE SHUT-DOWN OR ISOLATION OF ANY INDIVIDUAL STEAM RADIATOR, RISER, OR SYSTEM, IS COMMENCED THE CONTRACTOR SHALL PROVIDE THE TEMPORARY HEATING AS NECESSARY FOR THE AFFECTED AREA. SUCH AFFECTED AREAS MAY INCLUDE THE GIVEN FLOOR SLATED FOR DEMOLITION, LOWER FLOORS SERVED BY THE SAME RISER, OR THE EXTENT OF THE STEAM HEATING SYSTEM. IT IS RECOMMENDED FOR THE DEMOLITION OF THE STEAM HEATING SYSTEMS TO BE INITIATED FROM THE TOP OF THE BUILDING DOWN, FLOOR BY FLOOR, TO THE TERMINAL POINT OF DEMOLITION OF THE PIPING RISER, MAIN OR BRANCH, TO ALLOW FUNCTIONALITY OF EXISTING STEAM HEATING SYSTEMS ON LOWER FLOORS AS LONG AS POSSIBLE BEFORE DEMOLITION IS COMPLETE. CONTRACTOR SHALL ISOLATE, CUT, CAP AND RE-ACTIVATE STEAM HEATING SYSTEM AS NECESSARY FOR THE WORK AND HEATING REQUIREMENTS. THE CONTRACTOR IS RESPONSIBLE FOR PHASING DEMOLITION APPROPRIATELY AND TO PROVIDE ADEQUATE HEAT AT ALL TIMES. CONTRACTOR SHALL PROVIDE THE ENGINEER WITH A DEMOLITION PHASING PLAN FOR APPROVAL.
35. THE CONTRACTOR SHALL LEAVE THE OVERALL EXISTING TO REMAIN STEAM HEATING SYSTEM, HOT WATER HEATING SYSTEMS, AND
8 TEMPORARY HEATING SYSTEM IN OPERATIONAL CONDITION AT THE END OF DEMOLITION WORK TO PROVIDE SUFFICIENT HEATING AND SERVE EXISTING TO REMAIN EQUIPMENT AND SERVICES.
36. DURING DEMOLITION, NON COMBUSTIBLE TEMPORARY PARTITIONS TO SEAL OPENINGS TO PREVENT DUST AND DIRT FROM FILTERING INTO OCCUPIED AREAS ARE TO BE PROVIDED BY THE CONTRACTOR.
37. PROVIDE DEMOLITION FOR ALL EQUIPMENT SHOWN ON PLANS AND AS REQUIRED FOR REMOVAL OR ABANDONMENT OF SYSTEMS EQUIPMENT AND DEVICES, ETC. MADE OBSOLETE BY THIS PROJECT, AND AS REQUIRED FOR FUTURE DEMOLITION AND REMODELING WORK.
38. COORDINATE ALL DEMOLITION AND CHANGEOVER WORK ON THE PROJECT, WITH UTILITY COMPANIES WHERE APPLICABLE, AND WITH THE FACILITY.
39. PRIOR TO COMMENCEMENT OF WORK, CONTRACTOR SHALL EXAMINE THE PROJECT SITE TO DETERMINE ALL ACTUAL OBSERVABLE CONDITIONS.

GENERAL PHASING NOTES:

1. CONTRACTOR SHALL PROVIDE PHASING PLAN OF DEMOLITION AND NEW WORK. CONTRACTOR SHALL COORDINATE AND PHASE ALL SERVICE SHUT-DOWNS, DEMOLITION WORK, AND CONSTRUCTION WORK OF HVAC SYSTEMS TO MAINTAIN UNINTERRUPTED SERVICE TO OCCUPIED AREAS OF THE BUILDINGS AND SURROUNDING PREMISES THROUGHOUT ALL WORK AND TO NOT INTERFERE WITH THE UNINTERRUPTED OCCUPANCY, SAFETY, AND BENEFICIAL USE OF OCCUPIED AREAS OF THE BUILDINGS AND SURROUNDING PREMISES BY OWNER. COORDINATE AND PHASE ALL SERVICE SHUT-DOWNS, DEMOLITION AND NEW WORK WITH OWNER AND CONSTRUCTION MANAGER. CONTRACTOR SHALL IDENTIFY AND NOTIFY OWNER OF ANY AND ALL WORK AFFECTING OCCUPIED AREAS OF THE BUILDINGS AND SURROUNDING AREAS FOR APPROVAL BY OWNER AND OWNER'S REPRESENTATIVE.

DEMOLITION LEGEND KEY:

GENERAL NOTE: ALL MATERIALS AND/OR EQUIPMENT ON DRAWINGS INDICATED BY DASHED LINES ARE TO BE DEMOLISHED, UNLESS OTHERWISE INDICATED.

- EXISTING EQUIPMENT TO BE DEMOLISHED
- EXISTING STEAM, CONDENSATE, OR OTHER HVAC PIPE RISER TO BE DEMOLISHED
- BOUNDARY LINE INDICATING AREAS OF DEMOLITION WORK.
- AREA WITH HORIZONTAL HVAC PIPE RUNS CONNECTING TO OFFSET PIPE RISERS. HVAC PIPING AND ASSOCIATED VALVES TO BE DEMOLISHED.
- EXISTING WINDOW FAN TO BE DEMOLISHED
- EXISTING EQUIPMENT TO REMAIN
- BOUNDED AREA REQUIRING CONTINUOUS ACCESS THROUGHOUT THE DEMOLITION, FOR THE ONGOING USE OF THE FACILITY STAFF AS REQUIRED FOR THE NORMAL, UNIMPEDED OPERATION OF THE FACILITY.
- AREA INDICATING SHAFT WITH HVAC DUCTWORK AND/OR PIPING. DUCTWORK AND PIPING IN SHAFT, ALL BRANCHES TO/FROM SHAFT, AND HVAC EQUIPMENT ASSOCIATED WITH THE DUCTWORK TO BE DEMOLISHED.

EXISTING SYSTEM TESTING POINT SCHEDULE

TESTING/BALANCING POINT	FLOOR LOCATION	ASSOCIATED DRAWINGS	ASSOCIATED SYSTEMS	BALANCING FLOW RATE
D-1, D-2, D-3, D-4, D-5	THIRD-ELEVENTH	MD2-103-2, MD2-106-2, MD2-111-2	SUPPLY, RETURN, EXHAUST DUCTWORK SIDE B	AS MEASURED
P-1, P-2, P-3	SECOND	MD2-102-2	CHILLED WATER, AHU-PREHEAT, AND REHEAT COIL PIPING SIDE B	AS MEASURED AT MAX. FLOW
P-4	THIRD-ELEVENTH	MD2-103-2, MD2-106-2, MD2-111-2	REHEAT COIL PIPING SIDE B	AS MEASURED AT MAX. FLOW
P-5 TO P-16	SUB-BASEMENT	M-619-2	HW FINNED TUBE RADIATOR PIPING SIDE B, RISERS S-8 TO S-20	AS INDICATED ON M-619-2

NOTES:

1. CONTRACTOR SHALL MEASURE AND RECORD THE FLOW RATE (CFM/GPM) AT MAX FLOW AT EACH TESTING POINT BEFORE DEMOLITION. THE RECORDED FLOW RATE SHALL BE USED FOR BALANCING OF SYSTEMS AFTER CONSTRUCTION IS COMPLETED. SUBMIT MEASUREMENTS TO OWNER'S REPRESENTATITVE.
2. P-4 FINAL BALANCING FLOW RATE MAY BE REDUCED SLIGHTLY BY THE FLOW TO REHEAT COILS REMOVED AS PART OF DEMOLITION.
3. P-15 FLOW RATE MAY BE REDUCED SLIGHTLY BY THE FLOW TO FINNED TUBE RADIATORS REMOVED AS PART OF DEMOLITION.

8 REVISED DRAWING 09/24/2015

NEW YORK STATE OF OPPORTUNITY. Office of General Services

DESIGN & CONSTRUCTION

CONSULTANTS:

RBSD ARCHITECTS P.C. | STV 100 Years

A Joint Venture
225 Park Avenue South
New York, New York 10003

WARNING:
THE ALTERATION OF THIS MATERIAL IN ANY WAY, UNLESS DONE UNDER THE DIRECTION OF A COMPARABLE PROFESSIONAL, I.E. ARCHITECT FOR AN ARCHITECT, ENGINEER FOR AN ENGINEER OR LANDSCAPE ARCHITECT FOR A LANDSCAPE ARCHITECT, IS A VIOLATION OF THE NEW YORK STATE EDUCATION LAW AND/OR REGULATIONS AND IS A CLASS 'A' MISDEMEANOR.

CONTRACT: CONSTRUCTION

TITLE: MAJOR BUILDING RENOVATIONS FOR THE MANHATTAN FORENSIC RELOCATION

LOCATION: MANHATTAN PSYCHIATRIC CENTER, BUILDING No. 102
600 EAST 125TH STREET WARDS ISLAND, NY 10035

CLIENT: NYS OFFICE OF MENTAL HEALTH

MARK	DATE	DESCRIPTION
8	09/24/2015	ADDENDUM 8
	6-15-2015	BID DOCUMENT

PROJECT NUMBER:	44578
DESIGNED BY:	IL
DRAWN BY:	YD
FIELD CHECK:	N/A
APPROVED:	PL

SHEET TITLE: HVAC DEMOLITION GENERAL NOTES AND LEGENDS, AND EXISTING TESTING POINT SCHEDULE

BUILDING NUMBER: 102

DRAWING NUMBER: MD2-001-2

SHEET

9/22/2015 12:07:49 PM

DEMOLITION NOTES

1A. REMOVE STEAM RADIATOR AND RISERS WITH ASSOCIATED BRANCHES, VALVES, TRAPS, EXPANSION LOOPS AND MAINS. EXPANSION LOOPS ARE TYPICAL, REFER TO DETAIL #2 ON MD2-501. STEAM RISER PIPE 2-1/2"Ø, CONDENSATE RETURN RISER PIPE 2"Ø.

1B. REMOVE STEAM RADIATOR AND RISERS WITH ASSOCIATED BRANCHES, VALVES, TRAPS, EXPANSION LOOPS AND MAINS. EXPANSION LOOPS ARE TYPICAL, REFER TO DETAIL #2 ON MD2-501. STEAM RISER PIPE 2"Ø, CONDENSATE RETURN RISER PIPE 1-1/4"Ø.

1C. REMOVE STEAM RADIATOR AND RISERS WITH ASSOCIATED BRANCHES, VALVES, TRAPS, EXPANSION LOOPS AND MAINS. EXPANSION LOOPS ARE TYPICAL, REFER TO DETAIL #2 ON MD2-501. STEAM RISER PIPE 1"Ø, CONDENSATE RETURN RISER PIPE 1"Ø.

2. REMOVE STEAM RISER WITH ASSOCIATED BRANCHES, VALVES, TRAPS, EXPANSION LOOPS AND MAINS. EXPANSION LOOPS ARE TYPICAL, REFER TO DETAIL #2 ON MD2-501.

3. EXISTING HOT WATER RISER SERVING SIDE B TO REMAIN. MAINTAIN AND PROTECT FROM DEMOLITON ALL HWS/R RISERS AND HORIZONTALS RUNS CONNECTED TO EXISTING TO REMAIN RISERS ON SIDE B AND IN CENTRAL CORE. CONTRACTOR SHALL VERIFY IN FIELD LOCATIONS OF EXISTING TO REMAIN HOT WATER PIPING AND SHALL MAKE NOTE OF EXISTING TO REMAIN HOT WATER RISERS AND RUNS FOR COORDINATION WITH NEW WORK.

4. REMOVE EXISTING ELECTRIC UNIT HEATER.

5. AREA TO REMAIN FULLY OPERATIONAL THROUGHOUT DURATION OF PROJECT. ALL EXISTING MECHANICAL EQUIPMENT INCLUDING, AC/ACC UNITS, UNIT HEATERS, AND FANS SERVING EXISTING TELECOM ROOM AND COMPUTER ROOM AREA TO REMAIN. EXISTING STEAM RADIATORS AND ASSOCIATED RISERS AND PIPING ARE EXISTING TO REMAIN. CUT AND CAP STEAM AND CONDENSATE RISERS BELOW 1ST FLOOR SLAB ABOVE.

6. DURING DEMOLITION PROVIDE PROTECTION FOR EXISTING ELECTRICAL SWITCHGEAR EQUIPMENT TO REMAIN OPERATIONAL THROUGHOUT PROJECT WORK.

7. REMOVE DUCTWORK OF TOILET EXHAUST RISER SERVING SIDE B UP TO 2ND FLOOR SLAB LEVEL. CUT, CAP AND INSULATE AIRTIGHT. PATCH AND FILL SHAFT OPENINGS AT 2ND FLOOR SLAB TO MAINTAIN 2 HR RATING OF SHAFT AND FLOOR.

8. CHILLED WATER AND HOT WATER PIPING IN MECHANICAL PIPE SHAFT SERVING MECHANICAL TOWER, SIDE A DUCT REHEAT COILS, AND SIDE B DUCT REHEAT COILS ARE EXISTING TO REMAIN.

9. REMOVE ALL STEAM RADIATOR DISTRIBUTION PIPING RUNS CONNECTED TO STEAM RISERS FOR FLOOR ABOVE. REFER TO RADIATORS ON FLOOR ABOVE FOR SIZES.

10. THIS CONTRACTOR SHALL BE RESPONSIBLE FOR MAINTAINING CONTINUOUS ACCESS TO ALL CORRIDORS ON THIS LEVEL, THROUGHOUT THE DEMOLITION, FOR THE ONGOING USE OF THE FACILITY STAFF AS REQUIRED FOR THE NORMAL, UNIMPEDED OPERATION OF THE FACILITY. BASE BUILDING SYSTEMS SUCH AS FIRE ALARM, SPRINKLERS, LIGHTING, VENTILATION, HEATING ETC. SHALL BE TEMPORARILY RELOCATED OR TEMPORARILY SUPPLEMENTED AS REQUIRED TO MAINTAIN CONTINUOUS OPERATION OF ALL CORRIDORS. COORDINATE THE PHASING AND TIMING OF DEMOLITION ACTIVITIES WITH THE CONSTRUCTION MANAGER AND FACILITY PERSONNEL AND ENSURE THAT SUFFICIENT ACCESS IS PROVIDED FOR FACILITY PERSONNEL THROUGHOUT THE DEMOLITION. FOR TEMPORARY VENTILATION WITHIN THE CORRIDOR REFER TO MPH-100-2 IN BID PACKAGE 1 DOCUMENTS AND AS BUILT CONDITION OF TEMPORARY VENTILATION AFTER BID PACKAGE 1 PHASE.

11. REMOVE HORIZONTAL PIPE RUNS FOR CHWS/R, PRE-HEAT COIL HWS/R, AND RE-HEAT COIL HWS/R FOR SIDE A BACK TO ISOLATION VALVE AT PIPE SHAFT RISER TAP OUT. TEMPORARILY CUT AND CAP FOR CONNECTION TO NEW.

12. REMOVE DUCTWORK BACK TO POINT INDICATED. CUT, CAP AIRTIGHT AND INSULATE.

13. REMOVE EXISTING VENT PIPE

14. EIXSTING OUTDOOR ACC UNIT TO REMAIN. RE-ROUTE REFRIGERANT PIPING AND SUPPORTS IN AREAWAY TO COORDINATE WITH NEW WORK AND PROVIDE ADEQUATE CLEARANCE MIN. 8'-0" AFF OF AREAWAY. REMOVE REFRIGERANT AND STORE FOR RE-USE. REMOVE REFRIGERANT PIPING LINES BACK TO ENTRY POINT INTO BLDG 102 AND CUT FOR RE-CONNECTION. WHILE UNIT IS UNDER SERVICE, PROVIDE TEMPORARY COOLING OF 65,000 BTU/H IN TV CONTROL ROOM AND COORDINATE WITH NEW WORK, FOR ZERO-DOWNTIME ON COOLING. REBALANCE INDOOR UNIT AS REQUIRED TO MEET TV CONTROL ROOM LOAD.

15. EXISTING TEMPORARY LOUVERS, FAN COIL UNIT, DUCTWORK, DIFFUSERS, GRILLES AND ASSOCIATED CONTROLS FOR TEMPORARY VENTILATION OF CORRIDOR TO REMAIN UNTIL NEW VENTILATION SYSTEM IS INSTALLED AND OPERATIONAL. PHASE DEMOLITION OF TEMPORARY VENTILATION SYSTEM WITH CONSTRUCTION AND COMMISSIONING OF NEW VENTILATION.

16. EXISTING HOT WATER RISER SERVING RADIATORS TO BE REMOVED ON THIS FLOOR. MAINTAIN AND PROTECT FROM DEMOLITON ALL HWS RISERS AND HORIZONTALS RUNS CONNECTED TO HWS RADIATOR RISERS ON SIDE B AND IN CENTRAL CORE. CUT AND CAP ALL CONNECTIONS TO RISER AT SUB-BASEMENT, BASEMENT AND FIRST FLOOR FOR NEW CONNECTION. COORDINATE SHUT-DOWN WITH FACILITY AND COORDINATE NEW PIPING WITH NEW WORK. CONTRACTOR SHALL FIELD VERIFY AND MAKE NOTE OF RISER LOCATION BEFORE AND AFTER DEMOLITION IS DONE. PROVIDE CAP FOR FUTURE CONNECTION TO HWS RISER BELOW SLAB AT TERMINAL POINT OF DEMOLITION. REFER TO RISER DIAGRAM ON M-619-2.

17. REMOVE DUCTWORK BACK TO CONNECTION TO SHAFT. CUT AND CAP DUCTWORK BEFORE DUCT PENETRATES THE SHAFT WALL AND/OR THE STAIR ENCLOSURE WALL. PROVIDE FIREPROOFING SEALANT AROUND EXISTING DUCTWORK AS REQUIRED.

GENERAL PHASING NOTES:

1. CONTRACTOR SHALL PROVIDE PHASING PLAN OF DEMOLITION AND NEW WORK. CONTRACTOR SHALL COORDINATE AND PHASE ALL SERVICE SHUT-DOWNS, DEMOLITION WORK, AND CONSTRUCTION WORK OF HVAC SYSTEMS TO MAINTAIN UNINTERRUPTED SERVICE TO OCCUPIED AREAS OF THE FACILITY AND SURROUNDING PREMISES THROUGHOUT ALL WORK AND TO NOT INTERFERE WITH THE UNINTERRUPTED OCCUPANCY, SAFETY, AND BENEFICIAL USE OF OCCUPIED AREAS OF THE FACILITY AND SURROUNDING PREMISES BY OWNER. COORDINATE AND PHASE ALL SERVICE SHUT-DOWNS, DEMOLITION AND NEW WORK WITH OWNER AND CONSTRUCTION MANAGER. CONTRACTOR SHALL IDENTIFY AND NOTIFY OWNER OF ANY AND ALL WORK AFFECTING OCCUPIED AREAS OF THE FACILITY AND SURROUNDING AREAS FOR APPROVAL BY OWNER AND OWNER'S REPRESENTATIVE.
2. THIS CONTRACTOR SHALL BE RESPONSIBLE FOR MAINTAINING CONTINUOUS ACCESS TO ALL CORRIDORS ON THIS LEVEL, THROUGHOUT THE DEMOLITION, FOR THE ONGOING USE OF THE FACILITY STAFF AS REQUIRED FOR THE NORMAL, UNIMPEDED OPERATION OF THE FACILITY. BASE BUILDING SYSTEMS SUCH AS FIRE ALARM, SPRINKLERS, LIGHTING, VENTILATION, HEATING ETC. SHALL BE TEMPORARILY RELOCATED OR TEMPORARILY SUPPLEMENTED AS REQUIRED TO MAINTAIN CONTINUOUS OPERATION OF ALL CORRIDORS. COORDINATE THE PHASING AND TIMING OF DEMOLITION ACTIVITIES WITH THE CONSTRUCTION MANAGER AND FACILITY PERSONNEL AND ENSURE THAT SUFFICIENT ACCESS IS PROVIDED FOR FACILITY PERSONNEL THROUGHOUT THE DEMOLITION. FOR TEMPORARY VENTILATION WITHIN THE CORRIDOR REFER TO MPH-100-2 IN BID PACKAGE 1 DOCUMENTS AND AS BUILT CONDITION OF TEMPORARY VENTILATION AFTER BID PACKAGE 1 PHASE.

GENERAL SHEET NOTES

1. FOR GENERAL NOTES, PHASING NOTES, DEMOLITION NOTES & TESTING POINT SCHEDULE REFER TO SHEET M-001, MD2-001.
2. FOR SYMBOLS, LEGEND AND ABBREVIATIONS REFER TO SHEET M-001, MD2-001.
3. ISOLATE AND DRAIN STEAM RADIATOR DISTRIBUTION, HOT WATER, AND CHILLED WATER PIPING SYSTEMS BEFORE REMOVING RADIATORS, COILS, ASSOCIATED PIPING, VALVES, ACCESSORIES AND EXPANSION LOOPS. DURING THIS TIME, VERIFY THAT EXISTING DEVICES TO REMAIN ARE OPERATIONAL.
4. CONTRACTOR SHALL VERIFY IN FIELD LOCATIONS AND QUANTITIES OF ALL EQUIPMENT, PIPING, AND DUCTWORK SYSTEMS TO BE DEMOLISHED.
5. CONTROL AND PNEUMATIC SYSTEMS AND TUBING SERVING SIDE B SYSTEMS THAT ARE EXISTING TO REMAIN SHALL BE PROTECTED FROM DEMOLITION WORK AND REMAIN INTACT.
6. TEMPORARY HEATING PROVIDED UNDER BID PACKAGE #1. PROVIDE ADDITIONAL TEMPORARY HEAT AS NECESSARY. REFER TO MD2-001.

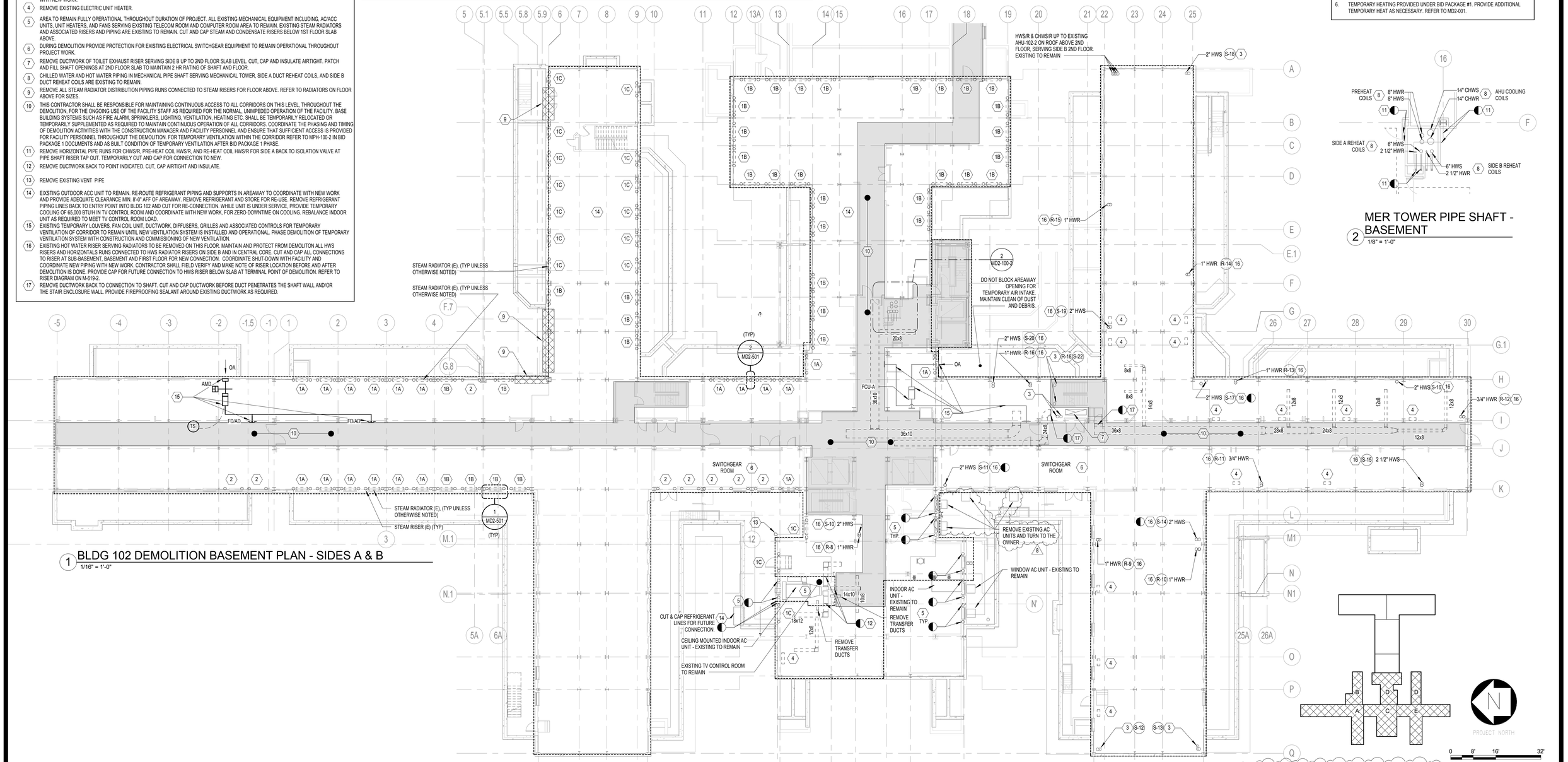

1 BLDG 102 DEMOLITION BASEMENT PLAN - SIDES A & B
1/16" = 1'-0"

2 MER TOWER PIPE SHAFT - BASEMENT
1/8" = 1'-0"

NEW YORK STATE OF OPPORTUNITY. Office of General Services

DESIGN & CONSTRUCTION

CONSULTANTS:

RBSD ARCHITECTS P.C. | STV 100 Years

A Joint Venture

225 Park Avenue South
New York, New York 10003

WARNING:
THE ALTERATION OF THIS MATERIAL IN ANY WAY, UNLESS DONE UNDER THE DIRECTION OF A COMPARABLE PROFESSIONAL. I.E. ARCHITECT FOR AN ARCHITECT, ENGINEER FOR AN ENGINEER OR LANDSCAPE ARCHITECT FOR A LANDSCAPE ARCHITECT, IS A VIOLATION OF THE NEW YORK STATE EDUCATION LAW AND/OR REGULATIONS AND IS A CLASS 'A' MISDEMEANOR.

CONTRACT:
CONSTRUCTION

TITLE:
MAJOR BUILDING RENOVATIONS FOR THE MANHATTAN FORENSIC RELOCATION

LOCATION: MANHATTAN PSYCHIATRIC CENTER, BUILDING No. 102
600 EAST 125TH STREET WARDS ISLAND, NY 10035

CLIENT:
NYS OFFICE OF MENTAL HEALTH

MARK	DATE	DESCRIPTION
8	09/24/2015	ADDENDUM 8
	6-15-2015	BID DOCUMENT

PROJECT NUMBER:	44578
DESIGNED BY:	IL
DRAWN BY:	YD
FIELD CHECK:	N/A
APPROVED:	PL

SHEET TITLE:
HVAC DEMOLITION WORK BASEMENT PLAN

BUILDING NUMBER: 102

DRAWING NUMBER: MD2-100-2

SHEET

9/22/2015 12:07:54 PM