STATE OF NEW YORK
OFFICE OF GENERAL SERVICES
DESIGN AND CONSTRUCTION GROUP
THE GOVERNOR NELSON A. ROCKEFELLER
EMPIRE STATE PLAZA
ALBANY, NY 12242

ADDENDUM NO. 2 TO PROJECT NO. 44640-C/E

CONSTRUCTION WORK
ELECTRICAL WORK

PROVIDE FIRE PUMPS AND ELECTRICAL SERVICE
CITYSCAPE BUILDING
STATE PREPAREDNESS TRAINING CENTER
5900 AIRPORT ROAD
ORISKANY, NEW YORK

January 13, 2014

NOTE: This Addendum forms a part of the Contract Documents. Insert it in the Project Manual. Acknowledge receipt of this Addendum in the space provided on the Bid Form.

CONSTRUCTION WORK SPECIFICATIONS

1. SECTION 262416 PANELBOARDS: Add the attached Section (pages 262416-1 thru 262416-3) to the Project Manual.

2. SECTION 263623 AUTOMATIC TRANSFER SWITCH: Add the attached Section (pages 263623-1 thru 263623-4) to the Project Manual.

ELECTRICAL WORK SPECIFICATIONS

3. SECTION 262416 PANELBOARDS: Delete the Section in its entirety from the Project Manual.

4. SECTION 263623 AUTOMATIC TRANSFER SWITCH: Delete the Section in its entirety from the Project Manual.

CONSTRUCTION WORK DRAWINGS

5. DRAWING C-110
   a. SITE REMOVALS AND RECONSTRUCTION NOTES COLUMN, Add the following note:
      "5. Assume for bidding purposes that the electrical trench is 6 feet wide."

6. Drawing C-502:
   a. Detail 3/C-502: Remove the eight (8) ¾" tie rods from the detail.

ELECTRICAL WORK DRAWINGS

7. Addendum Drawing:
   a. Drawing No. E-001, Noted "Addendum Drawing 1/8/14" accompanies this Addendum and forms part of the Contract Drawings.

END OF ADDENDUM

James Dirolf, P.E.
Director of Design

SECTION 262416

PANELBOARDS

PART 1 GENERAL

1.01 REFERENCES

A. NEMA, UL.

1.02 SUBMITTALS

A. Waiver of Submittals: The "Waiver of Certain Submittal Requirements" in Section 013300 does not apply to this Section.

B. Submittal Packages: Submit the shop drawings, and the product data specified below at the same time as a package.

C. Shop Drawings; include the following for each panelboard:
   1. Cabinet and gutter size.
   2. Voltage and current rating.
   3. Panelboard short circuit rating. Indicate if rating is Fully Rated Equipment Rating, or where acceptable, UL listed Integrated Equipment Short Circuit Rating.
   4. Circuit breaker enumeration (frame, ATE, poles, I.C.).
      a. Indicate if circuit breakers are suitable for the panelboards' Fully Rated Equipment Rating, or where acceptable, are series connected devices which have been test verified and listed with UL (include documentation proving the compatibility of the proposed circuit breaker combinations). Circuit breakers do not have to be listed as series connected devices when all of the circuit breaker interrupting ratings are equal to, or greater than, the short circuit rating of the panelboard.
   5. Accessories.

D. Product Data:
   1. Catalog sheets, specifications and installation instructions.
   2. Bill of materials.

E. Contract Closeout Submittals:
   1. Operation and Maintenance Data: Deliver 2 copies, covering the installed products, to the Director's Representative.

PART 2 PRODUCTS

2.01 PANELBOARDS

A. As produced by Cutler-Hammer/Eaton Corp., Challenger Electrical Equipment Corp. General Electric Co., Siemens/ITE, Square D Co., or Westinghouse Electric Corp., having:

1. Surface type cabinets as indicated on the drawings.
2. Door and one piece trim. Door fastened to trim with butt or piano hinges. Trim fastened to cabinet with devices having provision for trim adjustment.
3. Door lock. 2 keys with each lock (Exception: Not more than 7 keys, total).
4. Solid copper bus bars. Ampere rating of bus bars not less than frame size of main circuit breaker.
5. Full capacity copper neutral bus in panelboards where neutrals are required.
6. Copper equipment grounding bus in panelboards where equipment grounding conductors are required.
7. Sections designated “space” or “provision for future breaker” equipped to accept future circuit breakers.
8. Lock on devices for exit light, fire alarm, stair well circuits.
9. Provisions for padlocking circuit breaker handle in OFF position where indicated.
10. Directory.
11. Short circuit rating not less than indicated on panelboard schedule. Furnish panelboards having Fully Rated Equipment Rating (the short circuit rating of the panelboard is equal to the lowest interrupting rating of any device installed in the panelboard). Exception:
12. Molded case, bolt-on circuit breakers:
    a. Mounting: Individually mounted main circuit breaker (when MCB is required), and group mounted branch/feeder circuit breakers to accommodate the circuit breaker style and panelboard construction.

2.02 NAMEPLATES

A. General: Precision engrave letters and numbers with uniform margins, character size minimum 3/16 inch high.

1. Phenolic: Two color laminated engravers stock, 1/16 inch minimum thickness, machine engraved to expose inner core color (white).
2. Aluminum: Standard aluminum alloy plate stock, minimum .032 inches thick, engraved areas enamel filled or background enameled with natural aluminum engraved characters.
3. Materials for Outdoor Applications: As recommended by nameplate manufacturer to suit environmental conditions.

PART 3 EXECUTION

3.01 INSTALLATION

A. Install panelboards in accordance with NEMA Publication No. PB1.1 “General Instructions for Proper Installation, Operation and Maintenance of Panelboards Rated 600 Volts or Less”.
   1. Set/program the circuit breakers.

B. Directory: Indicate on typewritten directory the equipment controlled by each circuit breaker, and size of feeder servicing panelboard. For power panelboards also include ATE rating and feeder size for each breaker.

C. Identification:
   1. Use nameplates, or stencil on front of each panelboard with white paint, “LP-l, PP-l, etc.” in 1/2 inch lettering corresponding to panelboard designations on the drawings, and electrical parameters (phase, wire, voltage).
   2. Install a nameplate on each panelboard which explains the means of identifying each ungrounded system conductor by phase and system. Examples of nameplate statements:
      a. Identification of 120/208 Volt Circuit Conductors:
         1) 2 wire circuit - white*, black.
         2) 3 wire circuit - white*, black, red.
         3) 4 wire circuit - white*, black, red, blue.

      *White is used only as neutral. Where neutral is not required, black, red, or black, red, blue is used for phase to phase circuits.

      b. Identification of 277/480 Volt Circuit Conductors:
         1) 2 wire circuit - natural gray**, brown.
         2) 3 wire circuit - natural gray**, brown, yellow.
         3) 4 wire circuit - natural gray**, brown, yellow, orange.

      **Natural gray is used only as neutral. Where neutral is not required, brown, yellow, or brown, yellow, orange is used for phase to phase circuits.

END OF SECTION

SECTION 263623

AUTOMATIC TRANSFER SWITCH

PART 1 GENERAL

1.01 REFERENCES

A. UL 1008 listed, CSA certified.

B. NFPA 110.

C. NEMA Standard ICS2-447-AC Transfer Switches.

D. IEEE Standard 446.

E. ISO 9001.

1.02 TRANSFER SWITCH OPERATING DESCRIPTION

A. Description of Operation:

1. The transfer switch monitors electrical parameters of normal and alternate feeders.
2. In normal operating condition, the mechanism of the transfer switch is in the normal position. Sequence of transfer operation occurs as follows:
   a. The voltage on any phase of the normal feeder drops below 85 percent of normal, initiating in the transfer switch an adjustable time delay (set at 2 seconds) to over-ride voltage fluctuations and momentary outages.
   b. At the end of the adjustable time delay, the transfer sequence begins.
   c. A voltage-frequency device in the transfer switch prevents transfer until the alternate feeder voltage rises to 90 percent of normal and the frequency reaches 95% nominal.
   d. The transfer switch transfers load to the alternate feeder.
   e. Complete transition from onset of normal feeder failure to alternative feeder transfer shall not exceed 10 seconds.
   f. When voltage on all phases of the normal feeder is restored to 90 percent voltage, transfer from alternate to normal feeder is initiated with an adjustable time delay (5-25 minutes) in the transfer switch. g. The transfer switch transfers load to the normal feeder at the end of the time delay.
   h. Permanently attached manual operating handle(s) allow for safe manual transfer under load. The switch operating speed is the same operated electrically or manually.

1.03 SUBMITTALS

A. Waiver of Submittals: The "Waiver of Certain Submittal Requirements" in Section 013300 does not apply to this Section.

B. Submittals Package: Submit the product data, shop drawings, and quality control submittals specified below at the same time as a package.

C. Shop Drawings:
   1. Installation details (coordination with connected equipment).

D. Product Data:
   1. Catalog sheets, specifications and installation instructions.
   2. Bill of materials.
   3. Detailed sequence of operations (format similar to TRANSFER SWITCH OPERATING DESCRIPTION).
   4. Company's data indicating maintenance schedule.
   5. Name, address and telephone number of nearest fully equipped service organization.

E. Quality Control Submittals:
   1. Design Data:
      a. Company's data indicating the switch will meet the requirements of 1.03 B.
      b. Certified data from the Company proving that the switch will meet the requirements of 1.03 A. Design Criteria.
   2. Company Field Advisor Data: Include:
      a. Name, business address and telephone number of Company Field Advisor secured for the required services.
      b. Certified statement from the Company listing the qualifications of the Company Field Advisor.
      c. Services and each product for which authorization is given by the Company, listed specifically for this project.
   3. Completed Installation List.

F. Contract Closeout Submittals:
   1. Operation and Maintenance Data: Deliver 2 copies, covering the installed product, to the Director's Representative. Include name, address and telephone number of nearest fully equipped service organization.
   2. Test Report: Switch/System acceptance test report.
   3. Certificate: Affidavit, signed by the Company Field Advisor and notarized, certifying that the switch operation with the related equipment meets the contract requirements and is operating properly.

1.04 QUALITY ASSURANCE

A. List of Completed Installations: If brand names other than those specified are proposed for use, furnish the name, address and telephone number of a least 5 comparable installations which can prove the proposed products have operated satisfactorily for 3 years.

B. Company Field Advisor: Secure the services of a Company Field Advisor for a minimum of 8 working hours for the following:
   1. Render advice regarding installation and final adjustment of the switch.

2. Witness final switch/system test and then certify with an affidavit that the switch is installed in accordance with the contract documents and is operating properly.
3. Train facility personnel on the operation and maintenance of the switch (minimum of one 2 hour session).
4. Explain available service programs to facility supervisory personnel for their consideration.

C. Service Availability: A fully equipped service organization capable of guaranteeing response time within 8 hours to service calls shall be available 24 hours a day, 7 days a week to service the completed Work.

1.05 MAINTENANCE

A. Spare Parts:
1. Special tools if required for the regular maintenance and minor repairs of the switch.

PART 2 PRODUCTS

2.01 AUTOMATIC TRANSFER SWITCH

A. Automatic Switch Co.'s ASCO 940, Onan OT Series, Russelectric Inc.'s, Model RMT, or Zenith Controls Inc.'s ZTS, with:
1. Double throw construction.
2. Ratings as indicated on drawings.
3. Accessories to perform the functions specified in TRANSFER SWITCH OPERATING DESCRIPTION.
4. NEMA 1 enclosure.
5. Electrically operated and mechanically held.
6. Overlapping type switched neutral.
7. Adjustable time delay, 0-6 seconds, to override momentary outages before initiating transfer sequence.
8. Adjustable time delay, 0-30 minutes, on retransfer to normal feeder with bypass of time delay in event of alternate feeder failure.
9. Adjustable time delay, 0-5 seconds, on transfer to alternate feeder.
10. Test switch, momentary type, (permanent type are acceptable when accompanied by flashing red lights at the transfer switch to indicate switch is not in automatic mode), to simulate normal feeder failure (transfer to alternate feeder).
11. Two identified pilot lights to indicate switch position (green normal, red alternate).
12. Auxiliary contact on main shaft (closed on normal).
13. Auxiliary contact on main shaft (closed on emergency).
14. Equipment ground lug.
15. Live parts shielded from personnel when door is open.

2.02 NAMEPLATES

A. General: Precision engrave letters and numbers with uniform margins, character size minimum 3/16 inch high.
   1. Phenolic: Two color laminated engravers stock, 1/16 inch minimum thickness, machine engraved to expose inner core color (white).
   2. Aluminum: Standard aluminum alloy plate stock, minimum .032 inches thick, engraved areas enamel filled or background enameled with natural aluminum engraved characters.

PART 3 EXECUTION

3.01 INSTALLATION

A. Install switch so that the maximum height above the floor to the center of the operating handle does not exceed 6'-0".

B. Identify switch, indicating designation, load served and normal feeder designation, by riveting or bolting nameplate to cover.

3.02 FIELD QUALITY CONTROL

A. Preliminary Switch/System Test:
   1. Preparation: Have the Company Field Advisor adjust the switch for the completed system (including the related equipment) and then operate it long enough to assure that it is performing properly.
   2. Run a preliminary test for the purpose of:
      a. Determining whether the switch is in a suitable condition to conduct an acceptance test.
      b. Checking and adjusting equipment.
      c. Training facility personnel.

B. Switch/System Acceptance Test:
   1. Preparation: Coordinate test with related equipment manufacturer and notify the Director's Representative at least 3 working days prior to the test so arrangements can be made to have a Facility Representative witness the test.
   2. Make the following tests:
      a. Test each switch function step by step as summarized under TRANSFER SWITCH OPERATING DESCRIPTION.
   3. Submit written report of test results signed by Company Field Advisor and the Director's Representative. Give a copy of the final report to the Director's Representative.

END OF SECTION

ABBREVIATIONS: (SOME ABBREVIATIONS MAY NOT BE USED)

A	AMP	HOA	HAND–OFF–AUTO SWITCH	PR	PAIR
AC	ABOVE COUNTER	HP	HORSEPOWER	RECEPT	RECEPTACLE
ACP	ACCESS CONTROL PANEL	IG	ISOLATED GROUND	RGS	RIGID GALVANIZED STEEL
AFF	ABOVE FINISHED FLOOR	INV	INVERTER	SER	SERVICE ENTRANCE RATED
AFG	ABOVE FINISHED GRADE	IR	INVERTER RELAY	SFL	SUB–FEED LUGS
ATS	AUTOMATIC TRANSFER SWITCH	JB	JUNCTION BOX	SH	SHIELDED
C	CONDUIT	K	KILO	TBB	TELEPHONE BACKBOARD
CU	COPPER	KVA	KILO–VOLT AMPERE	TVSS	TRANSIENT VOLTAGE SURGE SUPPRESSOR
CVT	CONTROL VOLTAGE TRANSFORMER	LFMC	LIQUIDTITE FLEXIBLE METAL CONDUIT	TW	TWISTED
EMT	ELECTRICAL METALLIC TUBING	LPR	LIGHTNING PROTECTION RISER	TYP	TYPICAL
ELU	EMERGENCY LIGHTING UNIT	MCB	MAIN CIRCUIT BREAKER	UG	UNDERGROUND
ELU1	FLUSH MOUNTED EMERGENCY LIGHT	MDP	MAIN DISTRIBUTION PANEL	UON	UNLESS OTHERWISE NOTED
ES	ELECTRIC STRIKE	MLO	MAIN LUGS ONLY	UPS	UNINTERRUPTABLE POWER SUPPLY
EXR	EXISTING TO REMAIN	MS	MOTOR STARTING	UTP	UNSHIELDED TWISTED PAIR
FACP	FIRE ALARM CONTROL PANEL	MTG	MOUNTING	V	VOLT
FTL	FEED–THRU LUGS	NEC	NATIONAL ELECTRIC CODE	VAV	VARIABLE AIR VOLUME CONTROLLER
FVNR	FULL VOLTAGE NON–REVERSING	NL	NIGHT LIGHT	W	WATT
G	GROUND	OL'S	THERMAL OVERLOAD UNITS	W/	WITH
GB	GROUND BAR	P	POLO	WP	WEAHTERPROOF
GFI	GROUND FAULT CIRCUIT INTERRUPTER	PVC	POLYVINYL CHLORIDE	ø	PHASE

SYMBOLS LEGEND:

- SURFACE MOUNTED PANEL
- CONDUIT TURNED UP
- CONDUIT TURNED DOWN
- CAPPED CONDUIT
- CIRCUIT CONSISTING OF GROUND, NEUTRAL AND PHASE CONDUCTORS. ADDITIONAL SLASH MARKS INDICATE SWITCHING OR TRAVELER CONDUCTORS, AND A LONG SOLID LINE INDICATES NEUTRAL. A SEPARATE GREEN GROUND CONDUCTOR SHALL BE PLACED IN ALL NEW CIRCUITS.
- CIRCUIT CONTINUATION, OR CIRCUIT TO EQUIPMENT CONNECTION
- HOMERUN
  X–Z,Y — WHERE 'X' INDICATES PANEL; WHERE 'Z,Y' INDICATES PANEL CIRCUIT NUMBER(S)

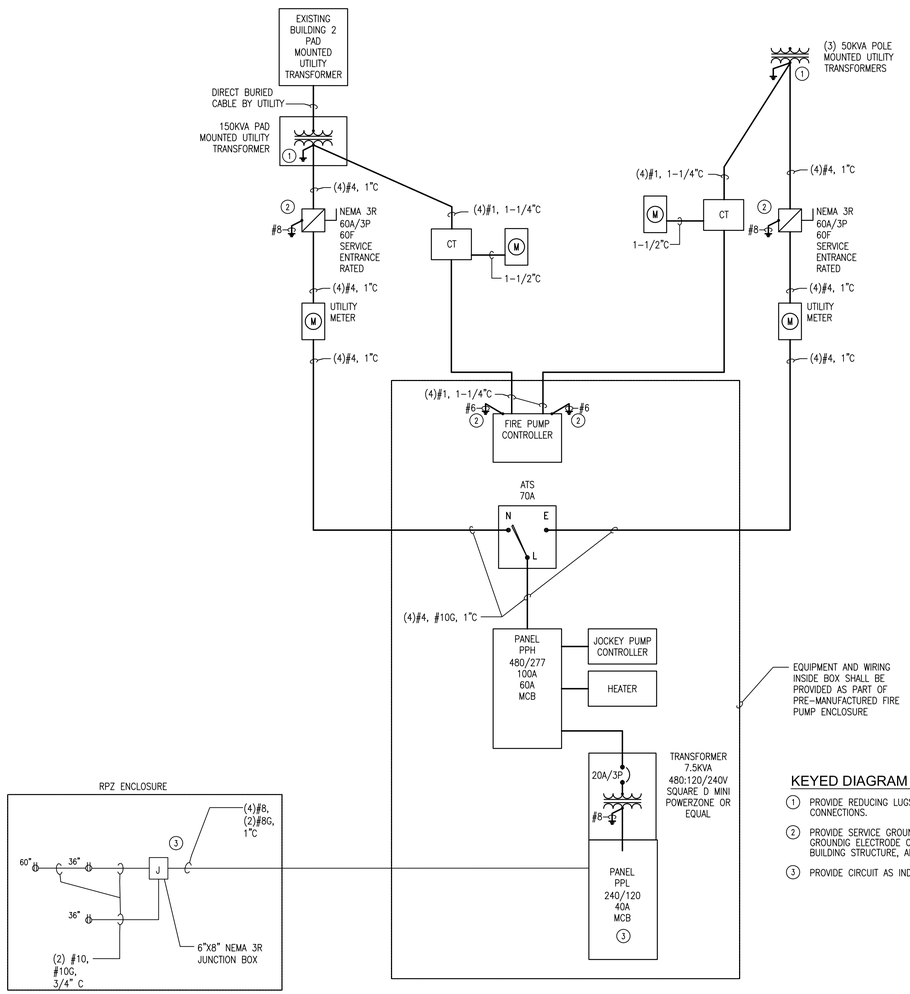

1 / E-001 FIRE PUMP ONE LINE DIAGRAM
SCALE: NTS

KEYED DIAGRAM NOTES:

1. PROVIDE REDUCING LUGS AS NECESSARY FOR TRANSFORMER SECONDARY CONNECTIONS.
2. PROVIDE SERVICE GROUNDING AND BONDING PER NEC 250. PROVIDE GROUNDIG ELECTRODE CONDUCTOR AS INDICATED TO WATER SERVICE, BUILDING STRUCTURE, AND PAD REBAR.
3. PROVIDE CIRCUIT AS INDICATED TO HEATERS IN RPZ ENCLOSURE.

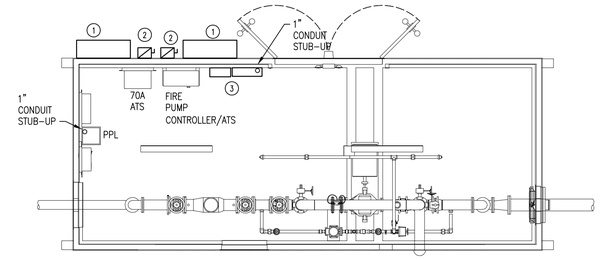

2 / E-001 FIRE PUMP LAYOUT
SCALE: 1/4"=1'–0"

KEYED NOTES:

1. PROVIDE UTILITY CT CABINET MOUNTED ON EXTERIOR WALL OF FIRE PUMP ENCLOSURE. PROVIDE UTILITY METER ABOVE CT CABINET ON EXTERIOR WALL OF FIRE PUMP ENCLOSURE. PROVIDE STEEL CHANNEL SUPPORTS FOR MOUNTING OF EQUIPMENT. SEAL ALL PENETRATIONS THROUGH FIRE PUMP ENCLOSURE.
2. PROVIDE FUSED DISCONNECT SWITCH MOUNTED ON EXTERIOR WALL OF FIRE PUMP ENCLOSURE. PROVIDE UTILITY METER ABOVE DISCONNECT SWITCH ON EXTERIOR WALL OF FIRE PUMP ENCLOSURE. PROVIDE STEEL CHANNEL SUPPORTS FOR MOUNTING OF EQUIPMENT. SEAL ALL PENETRATIONS THROUGH FIRE PUMP ENCLOSURE.
3. PROVIDE FIRE ALARM CABINET MOUNTED IN FIRE PUMP ENCLOSURE. PROVIDE (12) MONITOR MODULES TO CONNECT ALL POINTS MONITORED BY FIRE PUMP CONTROLLER AND ALL VALVE TAMPER SWITCHES TO FIRE ALARM SYSTEM. PROVIDE LIGHTNING ARRESTOR. PROVIDE HEAT DETECTOR, HORN/STROBE, AND PULL STATION IN FIRE PUMP ENCLOSURE. PROVIDE FIRE ALARM NOTIFICATION APPLIANCE CIRCUIT POWER SUPPLY (NAC). PROVIDE CONTROL RELAY WITH 120V CONTACTS CONNECTED TO NOTIFICATION CIRCUIT OF FIRE ALARM SYSTEM. MOUNT MONITOR MODULES, LIGHTNING ARRESTOR, AND CONTROL RELAY IN CABINET. PROVIDE LIGHTINING ARRESTOR INSIDE CITYSCAPE PANEL. PROVIDE THE SERVICES OF SIMPLEX TO TERMINATE CONDUCTORS, TEST, AND PROGRAM SYSTEM. PROVIDE ALL THE ABOVE VIA CONTRACT ALLOWANCE. PROVIDE 120V CIRCUIT, VIA RELAY, TO RED LIGHT AND AUDIBLE ALARM ON EXTERIOR OF ENCLOSURE. PROVIDE FIRE ALARM IDNET WIRING (2#14 TWISTED PAIR) FROM BUILDING FIRE ALARM CONTROL PANEL TO DEVICES IN FIRE PUMP ENCLOSURE.

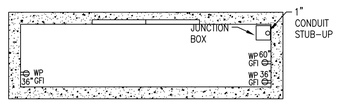

3 / E-001 RPZ ENCLOSURE ELECTRICAL LAYOUT
SCALE: 1/2"=1'–0"

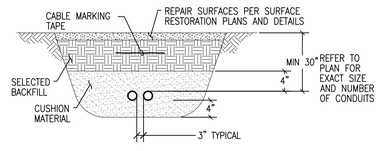

4 / E-001 TRENCHING DETAIL
SCALE: NTS

36x24 PLOT SHEET

NYS OFFICE OF GENERAL SERVICES
Serving New York
ANDREW M. CUOMO
Governor
ROANN M. DESTITO
COMMISSIONER

Engineering and Land Surveying, P.C.
1533 Crescent Road - Clifton Park, NY 12065

SAGE ENGINEERING ASSOCIATES, LLP
1211 WESTERN AVENUE
ALBANY, NY 12203
(518)453-6091 FAX(518)453-6092
#2842

WARNING:
THE ALTERATION OF THIS MATERIAL IN ANY WAY, UNLESS DONE UNDER THE DIRECTION OF A COMPARABLE PROFESSIONAL, I.E. ARCHITECT FOR AN ARCHITECT, ENGINEER FOR AN ENGINEER OR LANDSCAPE ARCHITECT FOR A LANDSCAPE ARCHITECT, IS A VIOLATION OF THE NEW YORK STATE EDUCATION LAW AND/OR REGULATIONS AND IS A CLASS "A" MISDEMEANOR.

CONTRACT:
ELECTRICAL

TITLE:
PROVIDE FIRE PUMPS AND ELECTRICAL SERVICE CITYSCAPE BUILDING

LOCATION:
STATE PREPAREDNESS TRAINING CENTER
5900 AIRPORT ROAD
ORISKANY, NY 13424

CLIENT:
DIVISION OF HOMELAND SECURITY & EMERGENCY SERVICES

MARK	DATE	DESCRIPTION
	1/8/14	ADDENDUM 1
	10/16/13	FINAL SUBMISSION
	4/11/13	100% SUBMISSION

PROJECT NUMBER:	44640– E
DESIGNED BY:	GC
DRAWN BY:	JT
FIELD CHECK:	
APPROVED:	

SHEET TITLE:
ELECTRICAL LEGEND, DETAILS, AND DIAGRAMS

DRAWING NUMBER:
E–001

SHEET 10 OF 14