DESIGN AND CONSTRUCTION GROUP
THE GOVERNOR NELSON A. ROCKEFELLER
EMPIRE STATE PLAZA
ALBANY, NY 12242

ADDENDUM NO. 1 TO PROJECT NO. 44706

ELECTRICAL WORK
REPLACE EMERGENCY GENERATOR AND SWITCHGEAR
BUILDING NOS. 20 AND 43
BARE HILL CORRECTIONAL FACILITY
181 BRAND ROAD
CALLER BOX 20
MALONE, NY 12953

March 24, 2016

NOTE: This Addendum forms a part of the Contract Documents. Insert it in the Project Manual. Acknowledge receipt of this Addendum in the space provided on the Bid Form.

DRAWINGS

1. Drawing G-002 Phasing Notes.

    a. Change Phase 1 sequence as follows: "Step 14 precedes Step 13".

    b. Revise Phase 4 step 23.C as follows: "23.C. Disconnect and remove existing 1000 kW generator set and all associated equipment and piping (Day tank and related fuel oil piping, exhaust system and related piping, cooling system and remote radiator, heat exchangers, fans, pumps and associated piping, main and auxiliary power and control equipment, piping and cabling, monitoring systems and cabling, battery and charging system and cables and other generator set auxiliaries and supports.) Remove existing fuel oil piping to and from existing day tank and back to exterior wall of Building 20. Exterior fuel oil piping on site to main tank is not in this contract. Remove day tank.

2. Drawing E-002 Enlarged Site Plan.

    a. Revise Note 7 as follows: "7. Refer to E-600 for temporary 15kV One Line Diagram. Refer to G-002 for Phasing Notes."

    b. KEYED NOTE 2 – Revise note to read: "Remove existing 6,000 gallon underground diesel tank and associated piping, wiring, conduit, controls, etc."

    c. KEYED NOTE 15 – Revise note to read "Existing 10,000 gallon tank will be removed under separate and concurrent project SA029."

3. Drawing E-101- FLOOR PLAN BUILDING NO. 20 AND BUILDING NO. 43 DEMOLITION.

    a. Revise Note 21 as follows: "Existing Day Tank to remain. Replace all interior fuel oil piping. Refer to detail 1/E-502".

4. Drawing E-102 – FLOOR PLAN BUILDING NO. 20 AND BUILDING NO. 43:

    a. KEYED NOTE 54 – Revise note to read "Wall Mounted Fuel Filtration Unit will be provided under separate and concurrent project SA029."

5. Drawing E-502 – DETAILS AND SCHEDULES:

    a. Detail 1 – Fuel Transfer Piping Diagram: Add to notation "Provided under separate project SA029" after notation "Fuel Filtration Unit".

    b. Detail 6 shall be replaced with new Detail 6 as attached to this Addendum.

    c. Add Detail 9 as attached to this Addendum.

6. Drawing E-600 Temporary 15kV One Line Diagram and Details.

    a. Detail 1/E-600 add note: "Feeder PF-5 from Generator #1 actually connects to MCSG Cubicle #3 (same cubicle as TPS-1). Feeder PF-6 from Generator #2 actually connects to MCSG Cubicle #2 (same cubicle as TPG-1)."

7. Drawing E-613 – POWER ONE LINE DIAGRAM

    a. Add Note 16 as follows:

    "16. The 87G and 87 Differential Protection Relays and the 51G Generator Ground Overcurrent Relay, shall be provided in the Generator Protection Unit at MCSG, as per Note 9. The switchgear supplier shall provide these relay functions at MCSG."

SPECIFICATIONS

8. Page 012200-1, replace subparagraph 1.01 A. 1. a. 4) with subparagraphs as follows:

"4) Equipment, excluding hand tools, which, in the judgment of the State, would have been or will be employed exclusively and directly on the omitted work or extra work.

5) Where the omitted or extra work is performed directly by the Contractor; by adding to the total of such estimated costs a sum equal to 15 percent thereof, but, where the omitted or extra work is performed by a subcontractor, by adding a sum equal to 15 percent of said costs for the benefit of such subcontractor, and by adding, for the benefit of the Contractor (no further allowance will be made where extra work is performed by any sub-subcontractor), an additional sum equal to:

a) 10 percent of the first $10,000 of the above-estimated costs, including the subcontractor's percentage override.

b) Plus 5 percent of the next $90,000 of the total of said items.
c) Plus 3 percent of any sum in excess of $100,000 of the total of said items.
d) For the purposes of the aforesaid percentage overrides, the words "extra work" shall be defined as a complete item of added, modified or changed work as described in writing to the Contractor and the reductions enumerated shall be applied individually to each Order on contract issued on a Contract. Such "extra work" may include the work of one or more trades and/or subcontractors or sub-subcontractors and shall include all labor, material, plant, equipment, tools and all incidentals directly and/or indirectly necessary, related, involved in or convenient to the successful completion of the extra work item. "

9. Page 012200-2, replace subparagraph 1.01A 4 with the following:

"4. All profit, overhead and expense of whatsoever kind and nature, other than those set forth above in Subparagraphs A.1.a. 1), 2) and 4), and below in Paragraph 1.01 F., of the Contractor, its subcontractors and sub-subcontractors, are covered by the aforesaid percentage overrides and no additional payment therefore will be made by the State."

10. Section 013300 – SUBMITTALS: Discard all previously issued version and substitute the accompanying Section (Pages 013300-1 thru 013300-10) noted "Revised 3/24/16".

11. Section 055963 – Detention Enclosures: Article 2.3, Paragraph E.: Delete last sentence in Paragraph.

12. Section 055963 – Detention Enclosures: Article 2.3, Paragraph F.: Revise to read as follows:

"Hardware Preparation: Mortise, reinforce, drill, and tap doors and main framings for templated hardware. Provide keyed lock to replace existing lock, same type and style."

13. Section 087100 – Finish Hardware: Add the accompanying section (pages 087100-1 through 087100-11) to the Project Manual.

14. Section 231010 – Fuel Filtration System: Delete section in its entirety.

15. Page 263215-1, DEISEL ALTERNATOR POWER SYSTEM:

a. Paragraph 1.02: Delete "AND TURNED OVER TO METAL CLAD SWITCHGEAR (MCSG) MANUFACTURER" from the heading.

b. Subparagraph 1.02A: Delete "and turn over to the switchgear manufacturer for inclusion in new metal clad switchgear MCSG."

c. Subparagraph 1.02A1: Delete paragraph in its entirety.

d. Paragraph 2.03.A is replaces as follows: "Utilize existing fuel oil day tank for Generator Set 2. Relocate and re-install as shown on the Drawings."

16. Section 333913- Manholes with Frames and Covers. Remove section in its entirety and replace it with section 337119 – ELECTRIC MANHOLE. (pages 337119-1 thru 337119-5) noted issued 3/24/16.

END OF ADDENDUM NO. 1

Margaret F. Larkin
Executive Director
Design and Construction

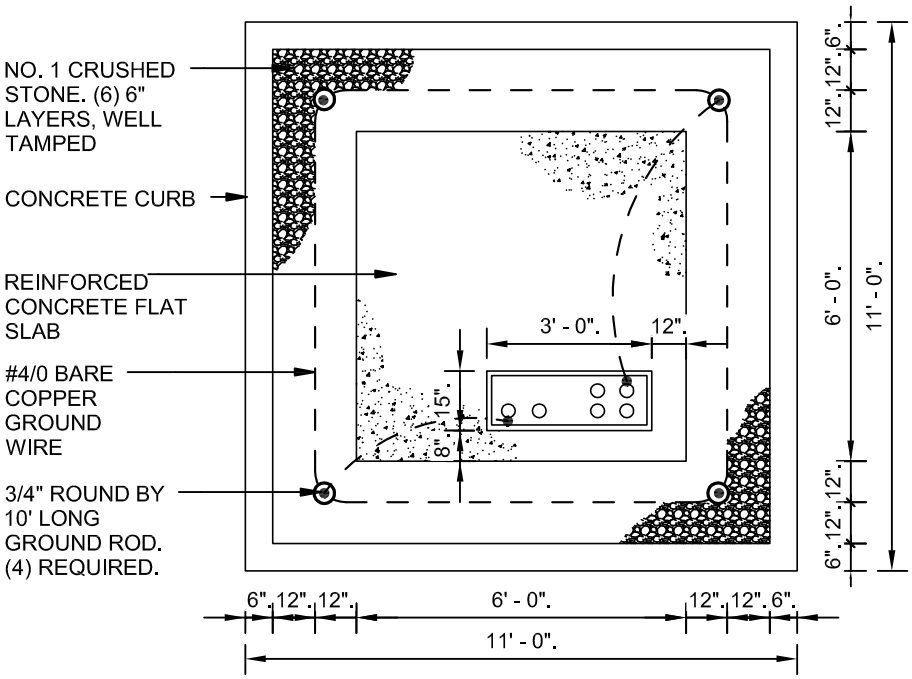

PLAN

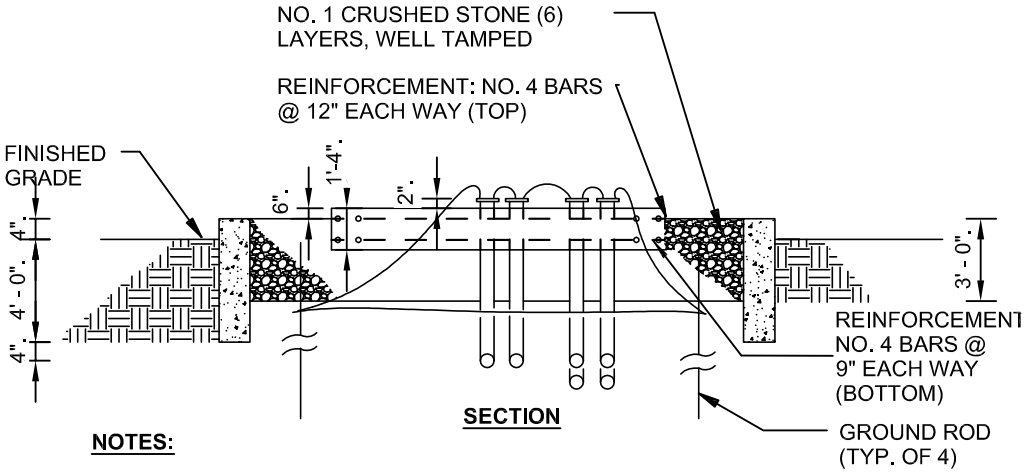

SECTION

NOTES:

1. **TOP EDGE AND CORNERS OF CONCRETE PAD SHALL BE CHAMFERED.**
2. **CONCRETE PAD SHALL BE 3,500 PSI, 1'-4"THICK MIN.**
3. **VERIFY DIMENSIONS WITH EQUIPMENT MANUFACTURER PRIOR TO CONSTRUCTION.**

6 300 KVA PADMOUNT TRANSFORMER

NEW YORK STATE OF OPPORTUNITY. Office of General Services

DESIGN & CONSTRUCTION

CONSULTANT

CANNONDESIGN

CONTRACT:	ELECTRICAL
PROJ. NO:	44706 –E
DATE:	03/23/16
DRAWN:	
APPROVED:	–

SHEET TITLE: DETAIL 6/E–502: 300 KVA PADMOUNT TRANSFORMER BID ADDENDUM #1

PROJECT: REPLACE EMERGENCY GENERATOR AND SWITCHGEAR BUILDING NOs. 20 AND 43

WARNING: THE ALTERATION OF THIS MATERIAL IN ANY WAY, UNLESS DONE UNDER THE DIRECTION OF A COMPARABLE PROFESSIONAL, I.E. ARCHITECT FOR AN ARCHITECT, ENGINEER FOR AN ENGINEER OR LANDSCAPE ARCHITECT FOR A LANDSCAPE ARCHITECT, IS A VIOLATION OF THE NEW YORK STATE EDUCATION LAW AND/OR REGULATIONS AND IS A CLASS 'A' MISDEMEANOR.

DWG NO: SD–E002

8.5x11 PLOT SHEET

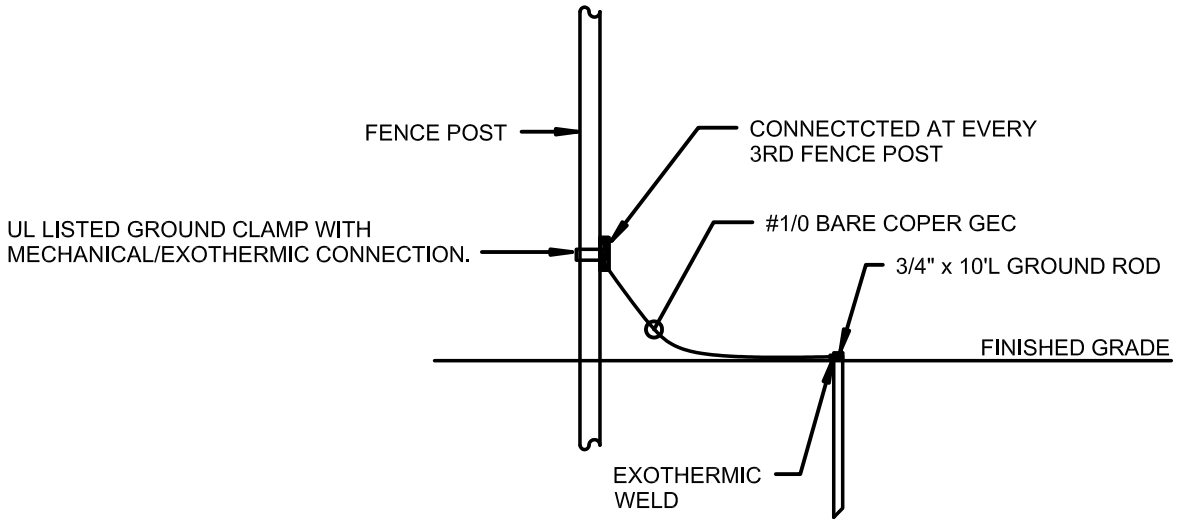

9 FENCE GROUNDING DETAIL

NEW YORK STATE OF OPPORTUNITY. Office of General Services

DESIGN & CONSTRUCTION

CONSULTANT

CANNONDESIGN

CONTRACT:	ELECTRICAL
PROJ. NO:	44706 –E
DATE:	03/23/16
DRAWN:	
APPROVED:	–

SHEET TITLE: DETAIL 9/E–502: FENCE GROUNDING DETAIL BID ADDENDUM #1

PROJECT: REPLACE EMERGENCY GENERATOR AND SWITCHGEAR BUILDING NOs. 20 AND 43

WARNING: THE ALTERATION OF THIS MATERIAL IN ANY WAY, UNLESS DONE UNDER THE DIRECTION OF A COMPARABLE PROFESSIONAL, I.E. ARCHITECT FOR AN ARCHITECT, ENGINEER FOR AN ENGINEER OR LANDSCAPE ARCHITECT FOR A LANDSCAPE ARCHITECT, IS A VIOLATION OF THE NEW YORK STATE EDUCATION LAW AND/OR REGULATIONS AND IS A CLASS 'A' MISDEMEANOR.

DWG NO: SD–E001

8.5x11 PLOT SHEET

SECTION 013300

SUBMITTALS

PART 1 GENERAL

1.01 RELATED REQUIREMENTS SPECIFIED ELSEWHERE

A. Other requirements pertaining to submittals are included in the General Conditions and in the various sections of the Specifications.

B. Summary of the Work: Section 011000.

C. Administrative Requirements: Section 013000.

D. Contract Closeout Submittals: Section 017716.

E. LEED Documentation Requirements: 018113.

1.02 DEFINITIONS

A. Deviation: Changes in products, materials, equipment and methods of construction from those required by the Contract Documents and proposed by the Contractor.

B. Acceptable Manufacturer, Company or Product: A manufacturer, company or product capable of achieving the requirements established in the Contract Documents and demonstrating compliance.

C. Portable Document Format (PDF): An open standard file format used for representing documents in a device-independent and display resolution-independent fixed layout document format.

1.03 DEVIATIONS FROM REQUIREMENTS OF THE CONTRACT DOCUMENTS

A. Deviations from the requirements of the Contract Documents will not be allowed unless a request for deviation is made in writing prior to or at the time of submission and the specific deviation is approved by the Director's Representative subject to the requirements of Article 4 of the General Conditions. The request for deviation shall be made utilizing the CONTRACT DOCUMENT DEVIATION REQUEST FORM (Form BDC 49) accessible from the OGS Web Site.

1. The submission of a deviation shall be done in a timely manner according to the schedule of submittals to allow the Director sufficient time for review.

1.04 "OR EQUAL" TO BRAND NAME PRODUCTS

A. Whenever a product is specified by brand name, a comparable brand, equal to that named, may be submitted for approval subject to the requirements of Article 5 of the General Conditions.
   1. The Contractor shall bear the burden of proving that the proposed product is equal to the specified product. The submission of an "or equal" shall be done in a timely manner to allow the Director sufficient time to review the proposed product.
   2. Whenever a color or pattern is indicated by a specific manufacturer's name or number, the intent is to communicate the required color or pattern of the material. Other manufacturers' comparable colors or patterns may be submitted for approval as equal.

1.05 WAIVER OF CERTAIN SUBMITTAL REQUIREMENTS

A. Unless otherwise specified, the requirement to submit product data and samples for approval will be waived for products specified by brand name if the specifically named products are furnished for the Work. In such cases, submit required Product Data to the Director's Representative via Submittal Exchange® for information only.

1.06 ADMINISTRATIVE REQUIREMENTS

A. Participate in the OGS's hosted web-based collaboration service (Submittal Exchange® at www.submittalexchange.com) to transmit and track Contractor provided project related documents.

B. Identify submittals by project title and number. Include Contractor's name, date, and revision date. On shop drawings, product data and samples, also include the name of the supplier and subcontractor (if any), and applicable specification section number. Stamp each submittal and initial or sign the stamp to certify review and approval of submittal.

C. Assemble submittals in accordance with the requirements in the individual sections of the Specifications and as required by this section. It is the Contractor's responsibility to review and verify that all information required for each submittal is included in the submittal package. Errors or omissions found by the Contractor are to be corrected prior to the submission of the submittal package for approval. Incomplete submittal packages that have been submitted for review and approval will be returned.
   1. It is the Contractor's responsibility to verify that portions of the submittal package to be provided by a subcontractor (or supplier) are complete, as well as portions of the submittal package being provided directly by the Contractor.
   2. Do not combine the submittals of more than one specification section with submittals required by other specification sections unless specifically stated in the contract Specifications.

D. If a submittal is based on, or the result of, a change order or field order to the Contract Documents, include copies of the applicable change order or field order with the submittal.

E. Coordination: Coordinate preparation and processing of submittals with performance of construction activities.
   1. Coordinate each submittal with fabrication, purchasing, testing, delivery, other submittals, and related activities that require sequential activity.
   2. Submit all submittal items required for each specification section concurrently unless instructions for partial submittals are required in a specific specification section requiring sequential submissions.
   3. Submit action submittals and informational submittals required by the same specification section as separate packages under separate transmittals.
   4. Coordinate transmittals of different types of submittals for related parts of the Work so processing will not be delayed because of need to review submittals concurrently for coordination.
      a. The Director's Representative reserves the right to withhold action on a submittal requiring coordination with other submittals until related submittals are received.

F. Processing Time: Allow time for submittal review, including time for resubmittals, as follows. Time for review shall commence on uploading the submittal to Submittal Exchange®. No extension of the project schedule will be authorized because of failure to transmit submittals enough in advance of the Work to permit processing, including resubmittals.
   1. Initial Review: Allow time for the initial review of each submittal. Allow additional time if coordination with subsequent submittals is required. The Designer of Record will advise the Director's Representative when a submittal being processed must be delayed for coordination.
   2. Resubmittal Review: Allow time for review of each resubmittal.
   3. Sequential Review: Where sequential review of submittals by the project team is necessary for coordination, allow time for review.

G. The Contractor(s) shall employ or otherwise provide a full-time Submittal Coordinator for no less than 90 days after the Initial Job Meeting (IJM). The Submittal Coordinator is responsible to manage, coordinate and facilitate the submittal process on behalf of the Contractor. The Submittal Coordinator shall have regularly been engaged in construction administration for a minimum of 3 years and shall not be employed or otherwise engaged as the Project Manager or Superintendent for either the Work of this Contract or be employed in any role, full or part time, outside of this Contract.

1.07 SUBMITTALS

A. Submittal Coordinator Qualifications: Not later than 10 days after Award. Include resume and references, and other certification, licenses, or other requested information.

B. Schedule of Submittals acknowledgement: Provide written acknowledgement that the Schedule of Submittals has been received and reviewed with Critical Submittals identified and Contractor's Projected Dates (three dates inserted into each column) are entered for each specification item.

1.08 RE-EVALUATION FEE

A. In accordance with Article 4.7 of the General Conditions, a re-evaluation processing fee will be levied against the Contractor for each re-evaluation of a Submittal or Submittal Package submission that was returned for failure to comply with the submittal requirements relative to completeness, content or format.

1.09 ELECTRONIC SUBMITTALS

A. Submittal Exchange® is used to provide an on-line database and repository which shall be used to transmit and track project related documents. The intent for using this service is to expedite the construction process by reducing paperwork, improving information flow, and decreasing submittal review turnaround time.
   1. Project submittals (shop drawing, product data and quality assurance submittals) shall be transmitted by the Contractor in PDF to Submittal Exchange®, where it will be tracked and stored for retrieval for review. After the submittal is reviewed it is uploaded back to Submittal Exchange® for action or use by the Contractor and Director's Representatives.
   2. The service also tracks and stores documents related to the project such as RFI's (Request for Information), IB's (Information Bulletins), CAD Coordination, Minutes, Testing, Closeout, and SWPPP documents.

B. For each submittal, the Contractor shall review and apply electronic stamp certifying that the submittal complies with the requirements of the Contract Documents, including verification of manufacturer/product, dimensions and coordination of information with other parts of the work.

C. It is the Contractor's responsibility to provide submittals in PDF. The Contractor may use the following options:
   1. Subcontractors and suppliers provide electronic submittals in PDF to the Contractor through Submittal Exchange®.
   2. Subcontractors and suppliers provide paper submittals to the Contractor, who electronically scans and converts them to PDF.
   3. Contract a Scanning Service, which will allow the Contractor and the Contractor's subcontractors and suppliers to provide paper submittals to the Scanning Service, which electronically scans and converts them to PDF. It will be the Contractor's responsibility to transmit the scanned submittals to Submittal Exchange®.

D. Image Quality:
   1. Image resolution: The PDF files shall be created at a minimum resolution of 200 dots per inch utilizing the original document size. The

Contractor will be responsible to increase the resolution of the scanned file or images being submitted as required to adequately present the information.

2. Image Color Rendition: When information represented requires color to convey the intent and compliance, provide full color PDF reproduction.

E. Internet Service and Equipment Requirements:

1. The Contractor will be required to have an Email address and Internet access at Contractor's main office.
2. Unless the Contractor will exclusively be using a Scanning Service to create PDF documents, the Contractor will be required to own a PDF reviewing, creating and editing software, such as Adobe Acrobat (www.adobe.com), Bluebeam PDF Revu® (www.bluebeam.com), or other similar PDF reviewing, creating and editing software for applying electronic stamps and comments.

F. Training and Support:

1. Submittal web-based collaboration training and support shall be available, free of charge from Submittal Exchange®, for project participants using the submittals website.
2. Training schedule will be coordinated through the Director's Representative.

G. Paper prints (hardcopies) of reviewed submittals:

1. Record Copy: Each Contractor shall provide one paper copy of each submittal they are responsible for to the Director's Representative within 14 days of receipt of a released submittal (i.e. marked "Approved", "Approved As Noted", or other implied acceptance of a submittal), or meeting the requirements of Waiver Of Certain Submittal Requirements Article of this specification section.
   a. Exception: Paper copies are not required for a submittal that is disapproved or requiring resubmission.
   b. Paper copies shall be printed in a size format equal to the original document.
   c. Scaled Shop Drawings shall be printed to the scale noted on the drawings.
   d. The resolution of the printed copy shall be equal to that of the PDF file that it is being printed from.
   e. The Record Copy shall be used by the Director's Representative during the construction of the project and shall be retained as a turn-over item to the facility at the end of the project as required under Section 017716 Contract Closeout.
2. Use for Construction: Retain complete copies of submittals on project site. The Contractor shall not commence work for related activities until the appropriate submittals are approved and the corresponding record copies are delivered to the Director's Representative.
3. Distribution: The Contractor will furnish copies of final submittals to manufacturers, subcontractors, suppliers, fabricators, installers, authorities having jurisdiction, and others as necessary for performance of construction activities. Maintain transmittal forms indicating distribution of submittals.

1.10 SHOP DRAWINGS

A. Provide shop drawings in the format required by the Specifications. Show the information, dimensions, connections and other details necessary to insure that the shop drawings accurately interpret the Contract Documents. Show adjoining construction in such detail as required indicating proper connections. Where adjoining connected construction requires shop drawings or product data, submit such information for approval at the same time so that connections can be accurately checked.

B. Electronic copies of CAD Drawings of the Contract Drawings will be provided by the Director's Representative for Contractor's use in preparing submittals.
   1. The Director's Representative will furnish one set of digital data drawing files of the Contract Drawings for use in preparing Shop Drawings.
      a. The Director's Representative makes no representations as to the accuracy or completeness of digital data drawing files as they relate to the Contract Drawings.
      b. Digital Drawing Software Program: The Contract Drawings are available in AutoCAD.
      c. The following digital data files will be furnished for each appropriate discipline:
         1) Floor Plans.
         2) Site Plans.
   2. The Contractor will be required to sign a Use Agreement for Project Documents prior to release of digital data drawing files of the Contract Drawings.

C. Have shop drawings prepared by a qualified detailer. Shop drawings shall be neatly drawn and clearly legible. Machine duplicated copies of Contract Drawings will not be accepted as shop drawings.
   1. Where shop drawings are indicated to be drawn to scale:
      a. Use scale normally found on an "Architect" or "Engineer" scale.
      b. Written Scale: Clearly label scales being used on each drawing and/or on each detail on the drawing.
         1) Examples: 1/8" = 1'-0" 1" = 40'-0".
      c. Graphic Scale: Adjacent to each Written Scale, provide a graphic scale delineating the scale being used. Graphic scale shall be divided into measuring units relating to the accuracy required for the drawing or details.
      d. Clearly dimension key elements of the drawing or detail.
   2. When the drawing sheet is printed full size, the minimum text size shall be 1/8" (3.2 mm) for hand drafting and 3/32" (2.5 mm) for CADD drawings.

D. Submit the shop drawings through Submittal Exchange®. The shop drawings will be reviewed and the review results will be posted on Submittal Exchange®. Contractor will receive email notice of completed review. If the review results in disposition of "DISAPPROVED" or "RETURNED FOR CORRECTION", promptly correct the deficiencies and resubmit the shop drawings meeting Contract requirements.

1.11 PRODUCT DATA

A. Provide product data in the format required by the Specifications. Modify product data by deleting information that is not applicable to the project or by marking the product data to identify pertinent products. Supplement standard information, if necessary, to provide additional information applicable to project.

B. Submit the product data through Submittal Exchange®. The product data will be reviewed and the review results will be posted on Submittal Exchange®. Contractor will receive email notice of completed review. If the review results in disposition of "DISAPPROVED" or "RETURNED FOR CORRECTION", promptly correct the deficiencies and resubmit the product data meeting Contract requirements.

C. Comply with applicable federal and State of New York Right-to-Know Law provisions. Provide Safety Data Sheets (SDS) documents for products that have SDS data prior to use on the project site.
   1. Upload and maintain electronic SDS documents on the Submittal Exchange® SDS tab.
   2. SDS tab is organized by prime contracts. To be readily identified, name products with SDS by specification section number and product name.
   3. Supply and maintain one hard copy of the appropriate SDS on the project site and one hard copy with the Facility's Right-to-Know Information Officer.

1.12 QUALITY ASSURANCE

A. Provide quality assurance information in the format required by the Specifications, including supporting documentation as required.

B. Submit the quality assurance information through Submittal Exchange®. The quality assurance information will be reviewed and the review results will be posted on Submittal Exchange®. Contractor will receive email notice of completed review. If the review results in disposition of "DISAPPROVED" or "RETURNED FOR CORRECTION", promptly correct the deficiencies and resubmit the quality assurance information meeting Contract requirements.

1.13 SAMPLES

A. Submit 2 (unless a different number is specified) of each sample required by the Specifications.

B. Samples will become the property of the State when submitted and will not be incorporated in the Work unless specifically stated otherwise.

C. The electronic submittal process is not intended for color samples, color charts, or physical material samples.

D. Record transmittal of each sample required by the Specifications through Submittal Exchange®.

E. Consult with the Director's Representative for direction on where Samples will be sent for review.

F. The sample will be reviewed and the review results will be posted on Submittal Exchange®. Contractor will receive email notice of completed review.

1.14 REVIEW OF SUBMITTALS

A. Items submitted for review will be reviewed for compliance with the Contract Documents, based upon the information submitted. The items will be acted upon with the following dispositions:

1. Approved:
   Where the submittal is marked "Approved", the work covered by the submittal may proceed provided it complies with the Contract Documents. Final acceptance will depend on that compliance.
2. Approved as Noted:
   Where the submittal is marked "Approved as Noted", the work covered by the submittal may proceed provided it complies with the review comments noted on the submittal and the Contract Documents. Final acceptance will depend on that compliance.
3. Disapproved:
   Where the submittal is marked "Disapproved", do not proceed with the work covered by the submittal, including purchasing, fabrication, delivery or other activity for the item submitted. Prepare a new submittal according to the review comments noted on the submittal and meeting the Contract Documents.
4. Returned for Correction:
   Where the submittal is marked "Returned for Correction", do not proceed with the work covered by the submittal, including purchasing, fabrication, delivery or other activity for the item submitted. Revise or prepare a new submittal according to the review comments noted on the submittal and meeting the Contract Documents.
5. Acknowledged:
   Where the submittal is marked "Acknowledged", receipt of the submittal is acknowledged and has been recorded.
6. No Action:
   Where the submittal is marked "No Action" or "No Action Taken", no review was made of this item, see comments noted on submittal and take appropriate action.
7. Multi-Action:
   Where the submittal is marked "Multi-Action", separate dispositions were made for the items submitted, see the review comments for the disposition of each item submitted.

1.15 SCHEDULES AND RECORDS

A. Submit the following Schedules and Records information not later than 15 days after approval of the Contract unless the Contractor or the Director determines an earlier submission is required to properly schedule or progress the Work.

1. SCHEDULE OF SUBMITTALS (S.O.S.):

a. Follow the Instructions to the Contractor in the S.O.S (cover page of the Microsoft Excel form supplied by the State).
b. Confirm submittal items listed and indicate in the spaces following each item, the date the item will be submitted (Projected Transmittal Date).
c. Confirm critical submittals and long lead items identified by the Architect / Engineer. Identify and mark with "X" additional submittals deemed as critical or having long lead times. In addition to the date each item will be submitted, include the date approval is required (allow at least 3 weeks), and the date delivery of the material or equipment is necessary for timely completion of the Work in accordance with the Project Schedule.
d. Notify the Director's Representative of modifications and/or additional submittals necessary for the project prior to requesting revisions with Submittal Exchange®.

2. SUBMITTALS WEBSITE LOG:
   a. The submittal website log will be populated by Submittal Exchange® by means of the S.O.S.
   b. Review the log and verify that all long lead items and critical submittals are properly indicated according to the latest version of the S.O.S. For each item to be submitted indicate the following:
      i. In the "Date Expected" column insert the date the item will be submitted for review and approval (this is the same date as the S.O.S "Projected Transmittal Date").
      ii. In the "Date Requested on Site" column insert the date the item will be delivered to the project site (this is the same date as the S.O.S "Projected Delivery Date").
   c. The submission date that is entered shall provide sufficient time for the item to be reviewed, ordered, delivered and installed for timely completion of the Work in accordance with the Project Schedule. The date entered for submittal of each item is the last day a deviation will be considered.

1.16 TRANSMITTALS

A. Submittal Transmittal (Form BDC 42) accessible from the OGS Web Site:
   1. Furnish separate Form BDC 42 for each submitted item sent to Submittal Exchange® for review.
      a. Contractor may utilize their own Transmittal Form (or Transmittal Letter) in lieu of utilizing the Form BDC 42, contingent on the Contractor's Transmittal Form includes all information and certifications required by Form BDC 42.
   2. Clearly identify applicable specification section number of submitted item (product data, shop drawing, etc.) on the Form BDC 42.

B. All Contracts:
   1. Transmit items designated in the Schedule of Submittals (and project Specifications) to the Submittal Exchange®.

PART 2 PRODUCTS (Not Used)

PART 3 EXECUTION (Not Used)

END OF SECTION

SECTION 087100

FINISH HARDWARE

PART 1 GENERAL

1.01 REFERENCES

A. NFPA 80 Fire Doors and Windows (2007).

B. NFPA 101 Life Safety Code (2006).

C. Building Code of New York State (2010).

D. ICC/ANSI A117.1-2003 Accessible and Usable Buildings and Facilities.

E. ANSI/BHMA Standard A156.1 Butts and Hinges (2006).

F. ANSI/BHMA Standard A156.4 Door Controls – Closers (2008).

G. ANSI/BHMA Standard A156.6 Architectural Door Trim (2005).

H. ANSI/BHMA Standard A156.7 Template Hinge Dimensions (2009).

I. ANSI/BHMA Standard A156.8 Door Controls – Overhead Stops and Holders (2005).

J. ANSI/BHMA Standard A156.13 Mortise Locks and Latches Series 1000 (2005).

K. ANSI/BHMA Standard A156.16 Auxiliary Hardware (2008).

L. ANSI/BHMA Standard A156.18 Materials and Finishes (2006).

M. ANSI/BHMA Standard A156.22 Door Gasketing Systems (2005).

N. ANSI/BHMA Standard A156.26 Continuous Hinges (2006).

O. DHI - Door and Hardware Institute.

P. NAAM Standard HMMA 800-96- Hollow Metal Manufacturers Association.

Q. NAAM Standard HMMA 831-97 Recommended Hardware Locations for Custom Hollow Metal Doors and Frames.

R. 2010 Standards for State and Local Government Facilities: Title II.

1.02 DEFINITIONS

A. Architectural Hardware Consultant (AHC): A Door and Hardware Institute certified expert in complex architectural openings requiring advanced knowledge of model building codes and safety standards, ADA requirements, access control knowledge and installation expertise.

B. Architectural Hardware Distributor: A company that regularly purchases architectural hardware from manufacturers and specializes in the sale, service and support of that hardware to contractors and/or end users.

C. Company Field Advisor(s): Hardware manufacturers' representatives who are certified in writing by manufacturer to be technically qualified in design, installation, and servicing of products.

D. Installation Supervisor: Designated supervisor/installer, who has a minimum three years' experience in finish hardware installation, and is qualified and responsible to ensure approved finish hardware is installed, adjusted, and operates properly.

1.03 SUBMITTALS

A. Waiver of Submittals: The Waiver of Certain Submittal Requirements in Section 013300 does not apply to this Section.

B. Re-Evaluation Fee: In accordance with the General Conditions 07213 Article 4.7.

C. Submittal Package Cover Sheets: The Hardware Distributor shall provide a cover sheet, which identifies each package by:
1. OGS project number.
2. Project name.
3. Facility name and location.
4. Submittal Package name.
5. Specification section name and number.
6. Construction Contractor's company name, address, e-mail address, and telephone number.
7. Finish Hardware Distributor's company name, address, e-mail address, and telephone number.
8. Certified Architectural Hardware Consultant's name, company name, address, e-mail address, and telephone number.
9. Submittal Date.

D. Submittal Packages:
1. Quality Control Package: Do not submit balance of packages until this package is approved.
   a. Architectural Hardware Consultant Data:
      1) Provide name, business address, and telephone number of DHI certified Architectural Hardware Consultant.

2) Submit photocopy of Door and Hardware Institute's certificate demonstrating individual is an Architectural Hardware Consultant.

b. Company Field Advisor Data:
   1) Provide name, business address, and telephone number of Company Field Advisor(s) for continuous hinges, door bolts, locksets, overhead stops, door closers, and gaskets.
   2) List services and products for which company field advisor(s) is/are certified by manufacturer. Provide written certifications.

c. Hardware Distributor's Qualification Data:
   1) Provide the Finish Hardware Distributor's company name, address, e-mail address, and telephone number.
   2) Provide the hardware distributor's company history, including number of years in the hardware distribution business, the number of AHC's employed, and the number of employees. Describe the distributor's major market.
   3) Include the names and contact information of physical plant managers for 3 facilities, similar to this project, for which the distributor has furnished architectural hardware within the past 2 years.

d. Supervisor's/Installer's Qualification Data:
   1) Name of Supervisor and each installer performing Work, and employer's name, business address and telephone number.
   2) Names and addresses, and contact information of physical plant managers for 3 facilities, similar to this project, on which each installer has worked on during past 2 years.

2. Finish Hardware Package:

a. Finish Hardware Schedule: Use vertical format and indicate finish hardware items, both mechanical and electrical in one document, required to complete Work of this section. Submit Hardware Schedule that includes complete hardware sets for each door and frame shown on Door Schedule.
   1) Preface schedule with following:
      a) Certified Architectural Hardware Consultant's statement of preparation of/or certification of, Finish Hardware Schedule.
      b) Index.
      c) List of manufacturers.
      d) List of finishes.
      e) Explanation of abbreviations.
      f) Keying instructions and key schedule.
   2) Create hardware groups, each group consisting of similar doors and hardware. Do not combine labeled and non-labeled openings. Do not combine doors and frames with dissimilar door sizes and/or materials.
   3) For each opening include the following:
      a) Door and frame materials and dimensions.

b) Fire rating.
c) Door number, location and handing.
d) Degree of opening required for closer and/or overhead stop.
e) Installation and detailing notes.

4) Under each group heading, list hardware items in detail, required for ordering. For each hardware item include:
a) Type (Hinges).
b) Quantity (Hinges 3ea).
c) Manufacturers' name (Hinges 3ea Stanley).
d) Catalog number (Hinges 3ea Stanley FBB199).
e) Size (Hinges 3ea Stanley FBB199 4 ½ x 4 ½).
f) Options or accessories (Hinges HTFBB199 4 ½ x 4 ½).
g) Finish (Hinges HTFBB199 4 ½ x 4 ½ x 630).
h) Fasteners (Hinges HTFBB199 4 ½ x 4 ½ x 630 x torx with center security pin).
i) Indicate location of protection plates: Push side or pull side.
j) Installation Notes, as written in this section, for each hardware group.

5) Use a separate hardware group in Hardware Schedule that lists attic stock hardware items, key cabinets, key control system, special tools required to install hardware, lubricants, and Operations and Maintenance Manuals.

b. Product Data: Furnish six copies of manufacturers' catalog sheets, specifications, sizing charts, and installation instructions, for each item specified. Highlight information pertaining specifically to product (s) submitted.

c. Submit samples as requested.

3. Closeout Submittals Package: Submit as a complete package.

a. Operation and Maintenance Manuals: Furnish 2 hardcover three ring binders with the project name and number displayed on the front cover and spine. Include:
1) List of Manufacturers.
2) Approved Finish Hardware Schedule.
3) Approved Manufacturers' Product Data Sheets.
4) Manufacturer's operation, installation, maintenance, and repair instructions for each type of hardware furnished.
5) Templates for kind of hardware furnished.
6) Parts List for each type of finish hardware furnished.
7) Manufacturers' dated written warranty for each type of finish hardware furnished.
8) Certifications: Written certification from Company Field Advisors that their products are installed according to manufacturers' printed installation instructions, are operating properly, and manufacturers' written warranty will be in effect upon physical completion of the Work.
9) Special Tools: List of special tools required to install hardware, and their purpose.

b. Special Tools:
   1) At conclusion of finish hardware installation, turn over to Director's Representative 2 of each special tool required to install hardware together with a list of these tools and their purpose.

1.04 TEMPLATES

A. After receipt of approved submittals, furnish templates to affected trades, to enable fabricators to make provision for finish hardware without delaying the Work of the Project.

1.05 DELIVERY AND STORAGE

A. Coordinate delivery to avoid delay.

B. Clearly label each item for identification and installation location as it corresponds to the approved Finish Hardware Schedule and subsequent information bulletins.

C. Deliver hardware to the jobsite in the manufacturers' original packages complete with fasteners, parts, installation instructions, and templates required for proper installation.

D. Inventory hardware at jobsite to identify shortages or backorders. Resolve delivery shortages and damaged items prior to installing hardware.

E. Store finish hardware where directed by Director's Representative. Provide locked, dry storage for finish hardware.

1.06 QUALITY ASSURANCE

A. Hardware Distributor's Qualification:
   1. Hardware Distributor who has been in the business of furnishing, and/ or installing finish hardware for a minimum of three years.
   2. Hardware Distributor shall have the DHI certified Architectural Hardware Consultant prepare or certify the Finish Hardware Submittal meets specification requirements, and the schedule is written accurately and in accordance with DHI recommendations, and requirements of this specification.

B. Company Field Advisors: Employ advisor(s) for continuous hinges, door bolts, mortise locksets, surface overhead stops, door closers, and gaskets.

C. Installation Supervisor: Employ a qualified Installation Supervisor who will be responsible to ensure approved finished hardware is installed, adjusted and operates properly.

D. Installers: Employ experienced finish hardware installers who have been regularly employed by a Company installing finish hardware for a minimum of 5 years.

E. Pre-submittal Conference: Before Finish Hardware Submittals are written for submission, the Director's Representative will call a teleconference to review Finish Hardware Submittal requirements including but not limited to format, cover sheet, headings, hardware sets, level of detail, installation notes, description of operation, keying, and product data sheets. The Contractor, the Finish Hardware Distributor, the Finish Hardware Detailer, and consulting hardware designer, and OGS Designers shall attend. The OGS Finish Hardware Reviewer shall conduct the conference.

F. On Site Pre-installation Conference: Before finish hardware installation begins, the Director's Representative will call a conference at the site to review Finish Hardware Specifications, approved Finish Hardware Submittals, and to discuss requirements for the Work including:
1. Hardware delivery and storage.
2. Hardware labeling by door number.
3. Hardware locations.
4. Potential location conflicts.
5. Hardware installation sequence and responsibility.
6. Required accessories and fasteners.
7. Continuous hinge installation.
8. Surface overhead stops and closer template and adjustments.
9. Special tools and maintenance items.
10. Hardware Closeout requirements.
11. Hardware Warranties.

G. Pre-installation Conference Attendance: The Construction Contractor, Company Field Advisors, authorized Finish Hardware Installers, and the Finish Hardware Distributor's Architectural Hardware Consultant shall attend the conference. OGS's Finish Hardware Reviewer conducts the meeting. OGS designers and facility personnel may attend. The Company Field Advisors will present installation instruction and advice.

H. Pre-Benchmark-Construction Meeting: Prior to the construction of the mock-up, a meeting will be held at the site to review the requirements, and discuss the intent of the mock-up. The meeting will be scheduled by the Director's Representative and conducted by the Hardware Designer. The meeting shall be attended by the Director's Representative, the Hardware Designer, the Contractor's onsite foreman, the person supervising this phase of the Work (if different), and the person (people) who will be performing the work.

I. Construction of Benchmark: Before installing portions of the Work requiring benchmarks, install benchmarks for each form of construction required to comply with the following requirements, using materials indicated for the completed Work.
1. Build hardware benchmark in door and frame assembly, specified in section 081102, in locations as directed, and include continuous hinge, lockset, closer, surface overhead stop and gaskets.

2. Notify the Director's Representative in advance of dates and times when benchmark will be constructed.
3. Install benchmark with supervisor oversight and workers who will be employed during the construction of the Work.
4. Construct benchmarks using the exact materials, products, methods, and workmanship that were approved for the Work.
5. Obtain Director's Representative's approval of benchmarks before starting work, fabrication, or construction.
6. Maintain benchmarks during construction in an undisturbed condition as a standard for judging the completed Work.
7. Failure to maintain this standard of quality will be cause for rejection of the Work.
8. Benchmark may be used in the Work unless otherwise indicated.

J. Uniformity of Hardware and Single Source Responsibility: For each kind of hardware provide product(s) of a single manufacturer.

K. Size Variations: Manufacturers' products may vary slightly from sizes specified except where minimum size or thickness is specified.

1.07 WARRANTY

A. Manufacturer's Warranty: Ten year minimum warranty for door closers.

B. Manufacturer's Warranty: Three year minimum for locksets.

1.08 MAINTENANCE

A. Special Tools: At the conclusion of finish hardware installation, turn over to Owner's Representative 2 sets of each special tools required for proper installation and adjustment of hardware, together with a list of these tools and their purpose.

B. Lubricants: Provide manufacturer's recommended lubricants for locksets and closers sufficient for 1 year of maintenance. Turn over to Director's Representative.

PART 2 PRODUCTS

2.01 ACCESSORIES

A. Provide brackets, plates, arms, spacers, and special templates to mount door closers in combination with overhead stops and coordinators, on narrow top rails and for special ceiling and jamb conditions.

B. Provide curved lip strikes, with wrought boxes, specific to individual lock functions. Universal strikes that fit a variety of lock functions are not acceptable.

2.02 FASTENINGS

A. Provide fasteners that harmonize with finish hardware material and finish.

B. Provide torx center pin security fasteners for exposed hardware, including full mortise hinges.

C. Provide machine screws for hardware secured to metal; and machine screws and metal expansion shields for attachment to masonry substrates. Self-tapping or self-drilling screws are not acceptable.

D. Provide undercut shallow head torx center pin security fasteners where necessary for proper seating.

E. Attach door closers and overhead stops with sex bolts.

2.03 MATERIALS AND FINISHES

A. General: Requirements for design, grade, function, finish, size, and other distinctive qualities of each type of finish hardware are indicated in this section and in the Hardware Groups.

B. Locks, Latches and Bolts:
1. Comply with UL requirements for throw of bolts and latch bolts on rated fire openings.
2. Provide 3/4” minimum throw on other latch bolts.
3. Provide 1” minimum throw deadbolts.

2.04 FINISH HARDWARE

A. Group 1: Install surface overhead stop; then install closer. Install lock strike; then install meeting stile gasket on edge of inactive leaf, offset towards push side.
1. Continuous Hinge: 2ea – Zero 919 STST x HT x marked “Top” x torx with center security pin x 630.
2. Combination Flush Bolt Set: 1set - Rockwood 1845 x torx with center security pin x 626.
3. Mortise Lockset: 1ea - Corbin Russwin ML2022 x YWM x curved lip strike x wrought box x torx with center security pin x 630.
4. Mortise Lock Cylinder: 2ea - Compatible with specified lock above x 626.
5. Coordinator: 1ea - Rockwood 1660 x torx with center security pin x black prime.
6. Coordinator Mounting Bracket: 3ea - Rockwood 1601AB or 1601C, per soffit size x torx with center security pin x black prime.
7. Closer: 1ea – LCN 4213 x SRI x thru-bolt x torx with center security pin x AL (LH active leaf).
8. Closer: 1ea – LCN 4213 x ST3456 arm x SRI x thru-bolt x torx with center security pin x AL (RH inactive leaf). See installation note.
9. Kick Plate: 2ea – Rockwood K1062 10” x 1 ½” LDW x B4E x torx with center security pin x 630.

10. Mop Plate: 2ea – Rockwood K1062 4” x ½” LDW x B4E x torx with center security pin x 630.
11. Overhead Stop: 1ea - Glynn Johnson 813S x thru-bolt x torx with center security pin x 630 x inactive leaf only**.** See installation note.
12. Wall stop: 1ea – Rockwood 400/402 as required x torx with center security pin x 626.
13. Meeting Stile Smoke Gaskets: 1ea – DHSI SA x anti-ligature x duranodic. See installation note.
14. Smoke Seals: 1set – DHSI CNS105 x anti-ligature x dark brown.

B. Group 2:
1. Continuous Hinge: 1ea – Zero 919 STST x HT x marked “Top” x torx with center security pin x 630.
2. Mortise Lockset: 1ea - Corbin Russwin ML2022 x YWM x curved lip strike x wrought box x torx with center security pin x 630.
3. Mortise Lock Cylinder: 2ea - Compatible with specified lock above x 626.
4. Closer: 1ea – LCN 4513T x SRI x thru-bolt x torx with center security pin x AL.
5. Kick Plate: 1ea – Rockwood K1062 10” x 1 ½” LDW x B4E x torx with center security pin x 630.
6. Mop Plate: 1ea – Rockwood K1062 4” x ½” LDW x B4E x torx with center security pin x 630.
7. Overhead Stop: 1ea – Glynn Johnson 814S x thru-bolt x torx with center security pin x 630.

C. Group 3:
1. Hinges: 3 each Stanley HTFBB191, 4-1/2” x 4-1/2” US26D (626) or equal .
2. Door Closer: 1 each LCN Model 4111; Aluminum standard powder coated finish or equal.
3. Lockset: Exit device Von Duprin Model 98-L-06-3’-US26D (626); 299 strike.
4. Weather-stripping: National Guard Products: 141NA; mill finish or equal.
5. Threshold: National Guard Products Model 425; mill finish.
6. Sweep: National Guard Products Model 199NA; mill finish

2.05 KEYING

A. Continue existing _____ key system established for Facility.
1. Stamp key symbol on one side of key, and “Do Not Duplicate” on other side of key.
2. Furnish one copy of factory bitting list to facility.
3. Factory key cylinders.
4. Furnish 3 cut keys for each master key.
5. Furnish 7 cut keys for each keyed lockset.
6. These cut key quantities are for bidding purposes only. Actual number of cut keys required will be determined at keying meeting.

7. When lockset and cylinder are by different manufacturers, identify and furnish correct cylinder cam to operate lockset.
8. Provide compression rings and spacers to achieve proper spacing relationship between cylinder and face of door.

B. Keying Conference:
1. Immediately following contract award, Director's Representative will schedule a keying conference to develop a written key schedule that reflects Facility's specific keying requirements. Facility Representative(s), Hardware Distributor, Consulting Hardware Designer, and OGS's Hardware Designer will attend.
2. Incorporate this schedule in Finish Hardware Submittals for approval.

PART 3 EXECUTION

3.01 EXAMINATION

A. Examine doors and frames and related items for conditions such as, but not limited to, incorrect handing, hardware preparation, misaligned lock and strike preparations, that would prevent proper application of finish hardware. Do not proceed until defects are corrected.

B. Report conditions or hardware applications that are incorrect to the Director's Representative.

3.02 INSTALLATION

A. Do not proceed with installation of finish hardware prior to attending referenced pre-installation conference.

B. Installation Sequence: Use proper installation sequence, i.e., install coordinators, and overhead stops and holders before surface mounted door closers.

C. Install hardware in accordance with manufacturer's printed installation instructions, and adjust for smooth operation, free of sticking, binding or rattling.
1. Template surface overhead stops and holders for proper operation
2. Template and adjust closers for proper operation.

D. Use proper tools and methods to prevent scratches, burrs or other defacement.

E. Gasket Installation:
1. Install continuous stripping at each opening without unnecessary interruptions.
2. Where fasteners are required, secure fasteners for stripping and seals so they will not work loose during door operation. Exposed heads of fasteners shall be free of sharp edges.
3. Coordinate meeting stile gasket with hardware before installation.
4. Install units plumb and level at the optimum location to maintain a permanent effective seal.

F. After installation, cover and protect hardware to prevent damage during remaining construction. Remove protection upon completion of construction.

3.03 LOCATIONS

A. Locate hardware of type and in location specified herein:
   1. Building 18 – Provide panic hardware, crash bar, and latching mechanism which shall replace existing. Door shall remain. Conform to NEC for requirements. Provide new panic hardware on two (2) existing doors. Locking mechanisms and keys shall remain as existing. (Provide on latched leaf at double door).
   2. Building 43 – Provide panic hardware, crash bar, and latching mechanism which shall replace existing. Door shall remain. Conform to NEC for requirements. Provide new panic hardware on two (2) existing doors. Locking mechanisms and keys shall remain as existing.
   4. Building 43 – Provide keylock set in Group 2 for two (2) doors in fan room.
   5. Provide metal wrap on all altered doors to conceal new work to existing doors.

3.04 FIELD QUALITY CONTROL

A. Post Installation Review: After hardware is adjusted for proper operation, Director's Representative will hold a Post-Installation Review with the Contractor, Hardware Designer, Company Field Advisors, Hardware Distributor and Hardware Installers.
   1. Physically inspect to verify proper application, installation, adjustment and operation of finish hardware, and in particular that:
      a) Latches engage freely without binding. Filing of strike plates to relieve latch bind is not acceptable.
      b) Closers are adjusted for proper spring power; sweep speed, latching speed; and hydraulic back check.
      c) Locations and proper attachment of installed protective hardware are as specified.
      d) There is no field modification of fasteners.
      e) Damaged fasteners are replaced.
   2. Defective hardware is repaired or replaced.
   3. Hardware is to be left clean and free from disfigurement.

B. Turn referenced Operations and Maintenance Manuals over to Facility through Director's Representative.

END OF SECTION

SECTION 337119

ELECTRIC MANHOLES

PART 1 GENERAL

1.01 RELATED WORK SPECIFIED ELSEWHERE

A. Earthwork: Section 310000.

B. Cast-In-Place Concrete: Section 033000.

1.02 DEFINITIONS

A. The words manhole, handhole and pullbox are synonymous.

1.03 SUBMITTALS

A. Waiver of Submittals: The "Waiver of Certain Submittal Requirements" in Section 013300 does not apply to the following products specified in this Section:
   1. Manholes.
   2. Manhole covers and frames.

B. Product Data: Catalog sheets, specifications and installation instructions.

C. Shop Drawings: Show dimensions, reinforcing and construction details for manholes.

PART 2 PRODUCTS

2.01 MANHOLES

A. Manholes may be precast or field constructed:
   1. Field Constructed Manholes: Furnish manholes of dimensions as shown on the drawings.
   2. Precast Manholes: As manufactured by The Fort Miller Co., or Lakelands Pre-cast, Inc., having:
      a. Reinforcing meeting American Association State Highway Officials requirements for H-20 loading. Drawings shall bear the seal of a professional engineer licensed to practice in the State of New York.
      b. Minimum interior dimensions as shown on the drawings for field constructed manholes.
      c. Walls minimum 6 inches thick reinforced concrete. Exception:
         1) Walls minimum 4-l/2 inches thick reinforced concrete for 30 x 30 inch manholes.

d. Top slab minimum 7 inches thick reinforced concrete.
Exceptions:
1) Top slab minimum 6 inches thick reinforced concrete for 4 x 4 foot manholes.
2) Top slab not required for 30 x 30 inch manholes.

e. Bottom slab minimum 6 inches thick reinforced concrete.
Exception:
1) Bottom slab minimum 4 inches thick reinforced concrete for 30 x 30 inch manholes.

f. Sealed joints.

B. Equip manholes with a pulling hook opposite each conduit entrance. Construct hook of 3/4 inch galvanized stock with 3 inch diameter eye and 8 inches for anchoring in manhole wall or use Pennsylvania Pulling Iron as manufactured by Pennsylvania Insert Corporation.

C. Provide a drain in center of manhole consisting of 30 inch length of 6 inch diameter vitrified sewer pipe extending downward under floor and filled with broken stone.

D. Provide a cast iron drain pipe in side wall of manhole, consisting of 4 inch diameter heavy cast iron soil pipe extending 3 feet beyond outer surface of manhole wall. Equip side drain pipe with perforated cover inside manhole. Plug end of pipe outside of manhole and leave for future connection by others.

E. Brick shall comply with the Specifications for Sewer Brick, Grade MS, ASTM C32.

F. Mortar: One part of Portland cement to 2 parts sand, mixed with water for proper consistency.

G. Waterproofing for Bricked-Up Throat: Single component, rubber reinforced asphalt elastomeric coating, ASTM D-4586 Type I and ASTM D-4479 Type I.

2.02 WATERTIGHT MANHOLE FRAMES AND COVERS

A. Design of each shall be the same throughout the project unless otherwise specified or indicated on the drawings.

B. Units shall meet AASHTO H20 wheel loading requirements. Manufacture, workmanship and certified proof-load tests shall conform to AASHTO M306-89.
1. Material:
a. Cast iron: ASTM A48, Class 30B or 35B.
b. Delivered to the site free of any coatings, unless otherwise specified.
2. Frames:
a. Round, 6-1/2 inches high with a 27-inch clear opening.
b. Minimum bearing area of the flange on the masonry: 645 sq. inches.
c. Minimum weight: 156 lbs.

3. Outer Lids:
   a. Round, approximately 1-1/2 inches thick at the perimeter bearing surface.
   b. Minimum one inch wide perimeter bearing surface.
   c. Unperforaced checkered surface design.
   d. Concealed type pick holes.
   e. The letter "P" 6 inches high cast in the outer lid for power manholes; the letter "S" 6 inches high for signal manholes.
   f. Minimum weight: 215 lbs.
4. Inner Lids:
   a. Each equipped with two lift handles, a neoprene seating gasket, and a lock bar with a hasp or other means suitable for padlocking.
   b. Minimum total weight of lid and lock bar: 165 lbs.

C. Acceptable Frames and Covers: Pattern R1755-G1 by Neenah Foundry Company, P. O. Box 729, Neenah, WI 54957, (414) 729-3661; Pattern 6553 by Syracuse Casting Sales Corp., P. O. Box 190, South Bay Rd., Cicero, NY 13039, (315) 699-2601.

2.03 CABLE SUPPORT ASSEMBLIES

A. Cable Support Assemblies (Steel): A.B. Chance Co.'s 1225 rack, 1231 Series support arms, 1121 porcelain insulators, or McGraw-Edison's DU10B Series rack, DU9S Series support arms, DE12U porcelain insulators.

B. Cable Support Assemblies (Nonmetallic): Underground Devices Inc.'s CR36 rack, RA Series support arms.

C. Cable Ties: Heavy-Duty Durable nylon construction with reinforced head and strap.
   1. Length as required.
   2. Minimum width .345 inches
   3. Minimum loop Tensile 175 lbs.

2.04 GROUNDING AND BONDING

A. Rod Electrodes: Copper clad (min. .010 jacket) ground rods minimum 3/4 inch diameter by 10'-0" long.

B. Exothermic Type Weld: Erico Products Inc.'s Cadweld Process.

C. Compression Connectors: Amp Special Industries' Ampact Grounding System, Burdy Corp.'s Hyground System, or Thomas & Betts Corp.'s Grid and Ground Rod System.

D. Grounding Electrode Conductors and Bonding Conductors: Bare copper conductors.

E. Hardware: Silicon-bronze bolts, nuts, flat and lock washers, etc. as manufactured by Burndy Corp., Dossert Corp., or OZ/Gedney Co.

PART 3 EXECUTION

3.01 PREPARATION

A. Dewater and remove debris from existing manholes used for the Work.

B. Provide heavy blankets, plywood or other devices to protect existing cables and equipment from physical damage.

3.02 INSTALLATION

A. Depth: Install manholes at depth required to bring top of manhole covers 2 inches above finished grade in lawns, and flush with paved surfaces of walks, roads, or parking spaces.

B. Bricked-Up Throat: Mortar brick into place. Set manhole frame with mortar. Waterproof exterior of throat with minimum thickness of 3/32 inch elastic bituminous plastic cement coating.

C. Cable Supports: Install racks, support arms and insulators of size and number to provide one insulator (or equivalent space on nonmetallic support arms) on each cable support assembly for each conduit entering the manhole:

1. New Manholes or Pullboxes: Route cables around periphery of manholes (or pullbox). Secure cables to cable support assemblies with cable ties. Equip manholes and pullboxes with number of cable support assemblies indicated below:
   a. Manholes:
      1) Where conduits penetrate 2 adjacent sides of a manhole, provide a minimum of 3 cable support assemblies.
      2) Where conduits penetrate 2 opposite sides of a manhole, provide a minimum of 3 cable support assemblies.
      3) Where conduits penetrate 3 sides of a manhole, provide a minimum of 3 cable support assemblies.
      4) Where conduits penetrate 4 sides of a manhole, provide a minimum of 6 cable support assemblies.
   b. Pullboxes:
      1) Where conduits penetrate 2 adjacent sides of a pullbox, provide a minimum of 2 cable support assemblies.
      2) Where conduits penetrate 2 opposite sides of a pullbox, provide a minimum of 1 cable support assemblies.
      3) Where conduits penetrate 3 sides of a pullbox, provide a minimum of 3 cable support assemblies.
      4) Where conduits penetrate 4 sides of a pullbox, provide a minimum of 4 cable support assemblies.

2. Existing Manholes or Existing Pullboxes: Equip existing manholes (or pullboxes) with cable support assemblies as required to support new cables. Route new cables around periphery of manhole. Secure cables with cable ties to cable support assemblies. Equip manholes and pullboxes with number of cable support assemblies indicated in paragraphs “a and b” above to support new cables.
   a. Set existing unracked cables on cable support assemblies where indicated on the drawings. Secure cables with cable ties to cable support assemblies.

D. Grounding and Bonding:
1. New Manholes Containing Feeder Circuits Over 600 Volts:
   a. Install rod electrode in each manhole near a wall. Install rod electrode thru floor into earth below manhole with 4 inches protruding for ground connection.
   b. Bond manhole cover frame, steel cable support assemblies and splices (lead sheath of splice or cable shields for non-lead type cables) to rod electrode with No. 6 AWG bare copper ground conductor.
   c. Make connection to rod electrode with exothermic type weld or compression connectors.
2. Existing Manholes Containing New Splices Over 600 Volts:
   a. Install a rod electrode in each manhole where new cable splices are required (existing rod electrodes may be utilized if available). Install rod electrode thru floor into earth below manhole with 4 inches protruding for ground connection.
   b. Bond existing manhole cover frame, new and existing steel cable support assemblies and new splices (lead sheath of splice or cable shields for non-lead type cables) to rod electrode with No. 6 AWG bare copper ground conductor.
   c. Make connection to rod electrode with exothermic type weld or compression connectors.

END OF SECTION