DESIGN AND CONSTRUCTION GROUP
THE GOVERNOR NELSON A. ROCKEFELLER
EMPIRE STATE PLAZA
ALBANY, NY 12242

ADDENDUM NO. 1 TO PROJECT NOS. 44790
CONSTRUCTION WORK, HVAC WORK, PLUMBING WORK, ELECTRICAL WORK
PROVIDE MAINTENANCE BUILDING
BROOKWOOD SECURE CENTER
PO BOX 419, CR 29
CLAVERACK, NEW YORK

November 12, 2015

NOTE: This Addendum forms a part of the Contract Documents. Insert it in the Project Manual. Acknowledge receipt of this Addendum in the space provided on the Bid Form.

SPECIFICATION GROUP

C, H, P, and E CONTRACTS:

1. 013300 SUBMITTALS: Discard the Section bound in the Project Manual and substitute the accompanying Section (pages 013300 – 1 thru 013300 – 9) noted "Revised 11/5/2015".

C – CONTRACT ONLY:

2. Page 072100 – 2, Article 2.01, Add the Following Paragraph:

"G. Spray Foam Insulation: Medium-density, semi-rigid, closed cell polyurethane foam; foamed on-site, using blowing agent of water or non-ozone-depleting gas.

1. Aged Thermal Resistance (R-value): 5 (deg F hr sq ft)/Btu, minimum, when tested at 1 inch thickness in accordance with ASTM C518 after aging for 180 days at 41 degrees F.
2. Core Density: 2.0 pcf. min.
3. Compressive Strength: 27 psi. min.
4. Water Vapor Permeance: Vapor retarder; 1.3 perm, maximum, when tested at intended thickness in accordance with ASTM E96/E96M, desiccant method.
5. Water Absorption: Less than 2 percent by volume, maximum, when tested in accordance with ASTM D2842.
6. Water Absorption: 1 percent by volume, maximum, when tested in accordance with ASTM D2842.
7. Closed Cell Content: At least 90 percent.
8. R-Value at 1 inch = 6.8.
9. Air Permeance: 0.004 cfm/sq ft, maximum, when tested at intended thickness in accordance with ASTM E2178 at 1.5 psf.
10. Max Service Temperature: 180 degrees F.
11. Surface Burning Characteristics: Flame spread/Smoke developed index of 25/450, maximum, when tested in accordance with ASTM E84.
12. Primer: As required by insulation manufacturer."

3. Page 087100 – 11, Change Paragraph 2.05 A. to Read:

   "A. Continue existing 'Best' compatible key system established by facility.
      1. Cores to be provided by the Facility and keying to be done by the Facility.
      2. Coordinate compatibility of all lockset hardware with facility cores, keying and regulatory standards.
      3. When lockset and cylinder are by different manufacturers, identify and furnish correct cylinder cam to operate lockset.
      4. Provide compression rings and spacers to achieve proper spacing relationship between cylinder and face of door."

E – CONTRACT ONLY:

4. 283105 MODIFICATIONS TO FIRE ALARM SYSTEMS: Discard the Section bound in the Project Manual and substitute the accompanying Section (pages 283105 – 1 thru 283105 – 22) noted "Revised 11/10/2015".

CONSTRUCTION WORK DRAWINGS

5. Drawing No. C-103:
   a. Add note "At this location, OGS Project Number 44980 is under construction to create a canopy between the existing buildings. Refer to accompanying reference drawings. Existing buildings and canopy, including structural piers and foundations, may not be disturbed during construction associated with utility runs indicated."

6. Drawing No. A-101, Overall Floor Plan 1:
   a. Storage Room 1: Add note "Provide 3'-0" x 4'-0" x 4"H raised concrete housekeeping pad, to be located at water heater and expansion tank, similar to Detail 10/ P-502. Coordinate final location of pad with Director's Representative and other Contractors."

   b. Wood Shop 8: Add note "Provide 3'-0" x 3'-0" x 6"H raised concrete housekeeping pad, to be located at air compressor, similar to Detail 10/ P-502. Coordinate final location of pad with Director's Representative and other Contractors."

7. Drawing No. A-104, Wash Bay Plan 2:
   a. Toilet Room 2: Add note "Provide 2'-6" x 2'-6" x 4"H raised concrete housekeeping pad, to be located at water heater, similar to Detail 10/ P-502. Coordinate final location of pad with Director's Representative and other Contractors."

   b. Wash Bay 4: Add note "Provide 3'-0" x 3'-0" x 4"H raised concrete housekeeping pad, to be located at power washer, similar to Detail 10/ P-502. Coordinate final location of pad with Director's Representative and other Contractors."

8. Drawing No. A-601, 4 Wall Partition Legend:
   a. Basic Components: Add general note "At all locations to receive ceramic tile finish, provide 5/8" tile backer board in lieu of gypsum wall board. Refer to Specifications Section 092813."

PLUMBING WORK DRAWINGS

9. Drawing No. P-103:
   a. Keyed Note #4: Add "Heater to be located on housekeeping pad provided by Construction Work Contract. Coordinate final location of equipment with Director's Representative and other Contractors."

10. Drawing No. P-300:
   a. Detail 6 Propane Fired Water Heater: Change "G.C." to "Construction Work Contract. Coordinate final location of equipment with Director's Representative and other Contractors."

11. Drawing No. P-501:
   a. Detail 6 Expansion Tank (DEXP-1): Change note to read "4" high housekeeping pad by Construction Work Contract. Coordinate final location of equipment with Director's Representative and other Contractors."

12. Drawing No. P-502:
   a. Detail 5 Wash Boom: Change note to read "3'x3'x4" high housekeeping pad, by Construction Work Contract,"
   b. Detail 7 Compressor Connection & Filter, General Note: Change "Owner" to "Contractor. Refer to Specifications Section 221519."
   c. Detail 7 Compressor Connection & Filter: Change note to read "4" high housekeeping pad by Construction Work Contract. Coordinate final location of equipment with Director's Representative and other Contractors."
   d. Detail 10 Housekeeping Pad: Add "Note: All housekeeping equipment pads to be provided by the Construction Work Contract. Coordinate final location of equipment with Director's Representative and other Contractors."

ELECTRICAL WORK DRAWINGS

13. Drawing No. E-501, 1 Electrical Riser Diagram:
   a. Keyed Note #8: Change "12" to "10".
   b. Feeders at Panel PW-1: Change note "8" to "Run 4 - #8 AWG, 1 – 10#AWG GND in 1" C".

14. Drawing No. E-602:
   a. Panel Schedule EPW-1: Change "Phase: 3" to "Phase: 1".
   b. Panel Schedule EPW-1: Change "Wire: 4" to "Wire: 3".

REFERENCE DRAWINGS

15. Reference Drawings: The following six (6) Reference Drawings, from OGS Project Number 44980, are attached to this Addendum: A/101, A/102, A/103, A/104, A/105 and S/101.

END OF ADDENDUM

Margaret F. Larkin
Executive Director
Design and Construction

EJB

SECTION 013300

SUBMITTALS

PART 1 GENERAL

1.01 RELATED REQUIREMENTS SPECIFIED ELSEWHERE

A. Other requirements pertaining to submittals are included in the General Conditions and in the various sections of the Specifications.

B. Summary of the Work: Section 011000.

C. Administrative Requirements: Section 013000.

D. Contract Closeout Submittals: Section 017716.

1.02 DEFINITIONS

A. Deviation: Changes in products, materials, equipment and methods of construction from those required by the Contract Documents and proposed by the Contractor.

B. Acceptable Manufacturer, Company or Product: A manufacturer, company or product capable of achieving the requirements established in the Contract Documents and demonstrating compliance.

C. Portable Document Format (PDF): An open standard file format used for representing documents in a device-independent and display resolution-independent fixed layout document format.

1.03 DEVIATIONS FROM REQUIREMENTS OF THE CONTRACT DOCUMENTS

A. Deviations from the requirements of the Contract Documents will not be allowed unless a request for deviation is made in writing prior to or at the time of submission and the specific deviation is approved by the Director’s Representative subject to the requirements of Article 4 of the General Conditions. The request for deviation shall be made utilizing the CONTRACT DOCUMENT DEVIATION REQUEST FORM (Form BDC 49) accessible from the OGS Web Site.

1. The submission of a deviation shall be done in a timely manner according to the schedule of submittals to allow the Director sufficient time for review.

1.04 “OR EQUAL” TO BRAND NAME PRODUCTS

A. Whenever a product is specified by brand name, a comparable brand, equal to that named, may be submitted for approval subject to the requirements of Article 5 of the General Conditions.

1. The Contractor shall bear the burden of proving that the proposed product is equal to the specified product. The submission of an "or equal" shall be done in a timely manner to allow the Director sufficient time to review the proposed product.
2. Whenever a color or pattern is indicated by a specific manufacturer's name or number, the intent is to communicate the required color or pattern of the material. Other manufacturers' comparable colors or patterns may be submitted for approval as equal.

1.05 WAIVER OF CERTAIN SUBMITTAL REQUIREMENTS

A. Unless otherwise specified, the requirement to submit product data and samples for approval will be waived for products specified by brand name if the specifically named products are furnished for the Work. In such cases, submit required Product Data to the Director's Representative via Submittal Exchange® for information only.

1.06 ADMINISTRATIVE REQUIREMENTS

A. Participate in the OGS's hosted web-based collaboration service (Submittal Exchange® at www.submittalexchange.com) to transmit and track Contractor provided project related documents.

B. Identify submittals by project title and number. Include Contractor's name, date, and revision date. On shop drawings, product data and samples, also include the name of the supplier and subcontractor (if any), and applicable specification section number. Stamp each submittal and initial or sign the stamp to certify review and approval of submittal.

C. Assemble submittals in accordance with the requirements in the individual sections of the Specifications and as required by this section. It is the Contractor's responsibility to review and verify that all information required for each submittal is included in the submittal package. Errors or omissions found by the Contractor are to be corrected prior to the submission of the submittal package for approval. Incomplete submittal packages that have been submitted for review and approval will be returned.
   1. It is the Contractor's responsibility to verify that portions of the submittal package to be provided by a subcontractor (or supplier) are complete, as well as portions of the submittal package being provided directly by the Contractor.
   2. Do not combine the submittals of more than one specification section with submittals required by other specification sections unless specifically stated in the contract Specifications.

D. If a submittal is based on, or the result of, a change order or field order to the Contract Documents, include copies of the applicable change order or field order with the submittal.

E. Coordination: Coordinate preparation and processing of submittals with performance of construction activities.

1. Coordinate each submittal with fabrication, purchasing, testing, delivery, other submittals, and related activities that require sequential activity.
2. Submit all submittal items required for each specification section concurrently unless instructions for partial submittals are required in a specific specification section requiring sequential submissions.
3. Submit action submittals and informational submittals required by the same specification section as separate packages under separate transmittals.
4. Coordinate transmittals of different types of submittals for related parts of the Work so processing will not be delayed because of need to review submittals concurrently for coordination.
   a. The Director's Representative reserves the right to withhold action on a submittal requiring coordination with other submittals until related submittals are received.

F. Processing Time: Allow time for submittal review, including time for resubmittals, as follows. Time for review shall commence on uploading the submittal to Submittal Exchange®. No extension of the project schedule will be authorized because of failure to transmit submittals enough in advance of the Work to permit processing, including resubmittals.
   1. Initial Review: Allow time for the initial review of each submittal. Allow additional time if coordination with subsequent submittals is required. The Designer of Record will advise the Director's Representative when a submittal being processed must be delayed for coordination.
   2. Resubmittal Review: Allow time for review of each resubmittal.
   3. Sequential Review: Where sequential review of submittals by the project team is necessary for coordination, allow time for review.

1.07 SUBMITTALS

A. Schedule of Submittals acknowledgement: Provide written acknowledgement that the Schedule of Submittals has been received and reviewed with Critical Submittals identified and Contractor's Projected Dates (three dates inserted into each column) are entered for each specification item.

1.08 RE-EVALUATION FEE

A. In accordance with Article 4.7 of the General Conditions, a re-evaluation processing fee will be levied against the Contractor for each re-evaluation of a Submittal or Submittal Package submission that was returned for failure to comply with the submittal requirements relative to completeness, content or format.

1.09 ELECTRONIC SUBMITTALS

A. Submittal Exchange® is used to provide an on-line database and repository which shall be used to transmit and track project related documents. The intent for using this service is to expedite the construction process by reducing paperwork, improving information flow, and decreasing submittal review turnaround time.

1. Project submittals (shop drawing, product data and quality assurance submittals) shall be transmitted by the Contractor in PDF to Submittal Exchange®, where it will be tracked and stored for retrieval for review. After the submittal is reviewed it is uploaded back to Submittal Exchange® for action or use by the Contractor and Director's Representatives.
2. The service also tracks and stores documents related to the project such as RFI's (Request for Information), IB's (Information Bulletins), CAD Coordination, Minutes, Testing, Closeout, and SWPPP documents.

B. For each submittal, the Contractor shall review and apply electronic stamp certifying that the submittal complies with the requirements of the Contract Documents, including verification of manufacturer/product, dimensions and coordination of information with other parts of the work.

C. It is the Contractor's responsibility to provide submittals in PDF. The Contractor may use the following options:
1. Subcontractors and suppliers provide electronic submittals in PDF to the Contractor through Submittal Exchange®.
2. Subcontractors and suppliers provide paper submittals to the Contractor, who electronically scans and converts them to PDF.
3. Contract a Scanning Service, which will allow the Contractor and the Contractor's subcontractors and suppliers to provide paper submittals to the Scanning Service, which electronically scans and converts them to PDF. It will be the Contractor's responsibility to transmit the scanned submittals to Submittal Exchange®.

D. Image Quality:
1. Image resolution: The PDF files shall be created at a minimum resolution of 200 dots per inch utilizing the original document size. The Contractor will be responsible to increase the resolution of the scanned file or images being submitted as required to adequately present the information.
2. Image Color Rendition: When information represented requires color to convey the intent and compliance, provide full color PDF reproduction.

E. Internet Service and Equipment Requirements:
1. The Contractor will be required to have an Email address and Internet access at Contractor's main office.
2. Unless the Contractor will exclusively be using a Scanning Service to create PDF documents, the Contractor will be required to own a PDF reviewing, creating and editing software, such as Adobe Acrobat (www.adobe.com), Bluebeam PDF Revu® (www.bluebeam.com), or other similar PDF reviewing, creating and editing software for applying electronic stamps and comments.

F. Training and Support:
1. Submittal web-based collaboration training and support shall be available, free of charge from Submittal Exchange®, for project participants using the submittals website.

2. Training schedule will be coordinated through the Director’s Representative.

G. Paper prints (hardcopies) of reviewed submittals:
1. Record Copy: Each Contractor shall provide one paper copy of each submittal they are responsible for to the Director’s Representative within 14 days of receipt of a released submittal (i.e. marked “Approved”, “Approved As Noted”, or other implied acceptance of a submittal), or meeting the requirements of Waiver Of Certain Submittal Requirements Article of this specification section.
   a. Exception: Paper copies are not required for a submittal that is disapproved or requiring resubmission.
   b. Paper copies shall be printed in a size format equal to the original document.
   c. Scaled Shop Drawings shall be printed to the scale noted on the drawings.
   d. The resolution of the printed copy shall be equal to that of the PDF file that it is being printed from.
   e. The Record Copy shall be used by the Director’s Representative during the construction of the project and shall be retained as a turn-over item to the facility at the end of the project as required under Section 017716 Contract Closeout.
2. Use for Construction: Retain complete copies of submittals on project site. The Contractor shall not commence work for related activities until the appropriate submittals are approved and the corresponding record copies are delivered to the Director’s Representative.
3. Distribution: The Contractor will furnish copies of final submittals to manufacturers, subcontractors, suppliers, fabricators, installers, authorities having jurisdiction, and others as necessary for performance of construction activities. Maintain transmittal forms indicating distribution of submittals.

1.10 SHOP DRAWINGS

A. Provide shop drawings in the format required by the Specifications. Show the information, dimensions, connections and other details necessary to insure that the shop drawings accurately interpret the Contract Documents. Show adjoining construction in such detail as required indicating proper connections. Where adjoining connected construction requires shop drawings or product data, submit such information for approval at the same time so that connections can be accurately checked.

B. Electronic copies of CAD Drawings of the Contract Drawings will not be provided by the Director’s Representative for Contractor's use in preparing submittals.

C. Have shop drawings prepared by a qualified detailer. Shop drawings shall be neatly drawn and clearly legible. Machine duplicated copies of Contract Drawings will not be accepted as shop drawings.
1. Where shop drawings are indicated to be drawn to scale:
   a. Use scale normally found on an “Architect” or “Engineer” scale.

b. Written Scale: Clearly label scales being used on each drawing and/or on each detail on the drawing.
   1) Examples: 1/8” = 1’-0” 1” = 40’-0”.

c. Graphic Scale: Adjacent to each Written Scale, provide a graphic scale delineating the scale being used. Graphic scale shall be divided into measuring units relating to the accuracy required for the drawing or details.

d. Clearly dimension key elements of the drawing or detail.

2. When the drawing sheet is printed full size, the minimum text size shall be 1/8" (3.2 mm) for hand drafting and 3/32" (2.5 mm) for CADD drawings.

D. Submit the shop drawings through Submittal Exchange®. The shop drawings will be reviewed and the review results will be posted on Submittal Exchange®. Contractor will receive email notice of completed review. If the review results in disposition of “DISAPPROVED” or “RETURNED FOR CORRECTION”, promptly correct the deficiencies and resubmit the shop drawings meeting Contract requirements.

1.11 PRODUCT DATA

A. Provide product data in the format required by the Specifications. Modify product data by deleting information that is not applicable to the project or by marking the product data to identify pertinent products. Supplement standard information, if necessary, to provide additional information applicable to project.

B. Submit the product data through Submittal Exchange®. The product data will be reviewed and the review results will be posted on Submittal Exchange®. Contractor will receive email notice of completed review. If the review results in disposition of “DISAPPROVED” or “RETURNED FOR CORRECTION”, promptly correct the deficiencies and resubmit the product data meeting Contract requirements.

C. Comply with applicable federal and State of New York Right-to-Know Law provisions. Provide Safety Data Sheets (SDS) documents for products that have SDS data prior to use on the project site.

1. Upload and maintain electronic SDS documents on the Submittal Exchange® SDS tab.
2. SDS tab is organized by prime contracts. To be readily identified, name products with SDS by specification section number and product name.
3. Supply and maintain one hard copy of the appropriate SDS on the project site and one hard copy with the Facility’s Right-to-Know Information Officer.

1.12 QUALITY ASSURANCE

A. Provide quality assurance information in the format required by the Specifications, including supporting documentation as required.

B. Submit the quality assurance information through Submittal Exchange®. The quality assurance information will be reviewed and the review results will be

posted on Submittal Exchange®. Contractor will receive email notice of completed review. If the review results in disposition of "DISAPPROVED" or "RETURNED FOR CORRECTION", promptly correct the deficiencies and resubmit the quality assurance information meeting Contract requirements.

1.13 SAMPLES

A. Submit 2 (unless a different number is specified) of each sample required by the Specifications.

B. Samples will become the property of the State when submitted and will not be incorporated in the Work unless specifically stated otherwise.

C. The electronic submittal process is not intended for color samples, color charts, or physical material samples.

D. Record transmittal of each sample required by the Specifications through Submittal Exchange®.

E. Consult with the Director's Representative for direction on where Samples will be sent for review.

F. The sample will be reviewed and the review results will be posted on Submittal Exchange®. Contractor will receive email notice of completed review.

1.14 REVIEW OF SUBMITTALS

A. Items submitted for review will be reviewed for compliance with the Contract Documents, based upon the information submitted. The items will be acted upon with the following dispositions:

1. Approved:
   Where the submittal is marked "Approved", the work covered by the submittal may proceed provided it complies with the Contract Documents. Final acceptance will depend on that compliance.
2. Approved as Noted:
   Where the submittal is marked "Approved as Noted", the work covered by the submittal may proceed provided it complies with the review comments noted on the submittal and the Contract Documents. Final acceptance will depend on that compliance.
3. Disapproved:
   Where the submittal is marked "Disapproved", do not proceed with the work covered by the submittal, including purchasing, fabrication, delivery or other activity for the item submitted. Prepare a new submittal according to the review comments noted on the submittal and meeting the Contract Documents.
4. Returned for Correction:
   Where the submittal is marked "Returned for Correction", do not proceed with the work covered by the submittal, including purchasing, fabrication, delivery or other activity for the item submitted. Revise or prepare a new submittal according to the review comments noted on the submittal and meeting the Contract Documents.

5. Acknowledged:
   Where the submittal is marked “Acknowledged”, receipt of the submittal is acknowledged and has been recorded.
6. No Action:
   Where the submittal is marked “No Action” or “No Action Taken”, no review was made of this item, see comments noted on submittal and take appropriate action.
7. Multi-Action:
   Where the submittal is marked “Multi-Action”, separate dispositions were made for the items submitted, see the review comments for the disposition of each item submitted.

1.15 SCHEDULES AND RECORDS

A. Submit the following Schedules and Records information not later than 15 days after approval of the Contract unless the Contractor or the Director determines an earlier submission is required to properly schedule or progress the Work.
   1. SCHEDULE OF SUBMITTALS (S.O.S.):
      a. Follow the Instructions to the Contractor in the S.O.S (cover page of the Microsoft Excel form supplied by the State).
      b. Confirm submittal items listed and indicate in the spaces following each item, the date the item will be submitted (Projected Transmittal Date).
      c. Confirm critical submittals and long lead items identified by the Architect / Engineer. Identify and mark with “X” additional submittals deemed as critical or having long lead times. In addition to the date each item will be submitted, include the date approval is required (allow at least 3 weeks), and the date delivery of the material or equipment is necessary for timely completion of the Work in accordance with the Project Schedule.
      d. Notify the Director’s Representative of modifications and/or additional submittals necessary for the project prior to requesting revisions with Submittal Exchange®.
   2. SUBMITTALS WEBSITE LOG:
      a. The submittal website log will be populated by Submittal Exchange® by means of the S.O.S.
      b. Review the log and verify that all long lead items and critical submittals are properly indicated according to the latest version of the S.O.S. For each item to be submitted indicate the following:
         i. In the “Date Expected” column insert the date the item will be submitted for review and approval (this is the same date as the S.O.S “Projected Transmittal Date”).
         ii. In the “Date Requested on Site” column insert the date the item will be delivered to the project site (this is the same date as the S.O.S “Projected Delivery Date”).
      c. The submission date that is entered shall provide sufficient time for the item to be reviewed, ordered, delivered and installed for timely completion of the Work in accordance with the Project Schedule. The date entered for submittal of each item is the last day a deviation will be considered.

1.16 TRANSMITTALS

A. Submittal Transmittal (Form BDC 42) accessible from the OGS Web Site:
   1. Furnish separate Form BDC 42 for each submitted item sent to Submittal Exchange® for review.
      a. Contractor may utilize their own Transmittal Form (or Transmittal Letter) in lieu of utilizing the Form BDC 42, contingent on the Contractor’s Transmittal Form includes all information and certifications required by Form BDC 42.
   2. Clearly identify applicable specification section number of submitted item (product data, shop drawing, etc.) on the Form BDC 42.

B. All Contracts:
   1. Transmit items designated in the Schedule of Submittals (and project Specifications) to the Submittal Exchange®.

PART 2 PRODUCTS (Not Used)

PART 3 EXECUTION (Not Used)

END OF SECTION

"Revised 11/10/2015"

SECTION 283105

MODIFICATIONS TO FIRE ALARM SYSTEM

PART 1 GENERAL

1.01 REFERENCES

A. Underwriters Laboratories Inc.

B. National Fire Protection Association Standard 72.

1.02 DEFINITIONS

A. Initiating Device Circuit: A circuit to which automatic or manual initiating devices are connected where the signal received does not identify the individual device operated. Example:
   1. Circuits from PPSSs and ICUs to non-addressable signal initiating devices.

B. Notification Appliance Circuit: A circuit or path directly connected to a notification appliance. Example:
   1. Circuits from PPSSs and ICUs to notification appliances.

C. Signaling Line Circuit: A circuit or path between any combination of circuit interfaces, control units, or transmitters over which multiple system input signals or output signals, or both are carried. Examples:
   1. Circuits from PSS to building PPSSs and ICUs.
   2. Circuits from PPSSs and ICUs to addressable devices.

D. Operating Mode:
   1. Private Mode:
      a. Audible and visible signaling only to those persons directly concerned with the implementation and direction of emergency action initiation and procedure in the area protected by the fire alarm system, and:
      b. Audible and visible signaling only to those persons within special designated areas where private mode operation is specified to be applicable.
   2. Public Mode: Audible and visible signaling to occupants or inhabitants of the area protected by the fire alarm system.

1.03 DESCRIPTION OF EXISTING SYSTEM

A. The existing system is **EST – IRC-3** Control Module CM2ND operates as an integrated multiplexed protected premises and proprietary fire alarm, monitoring and control system. Changes in the status of monitored points are detected by the micro-processor based proprietary supervising station (PSS) and protected

premises subsidiary stations (PPSSs) and remote control units (RCUs) located in buildings throughout the facility.

1. Smoke detectors and smoke sensors operate in conjunction with the systems’ alarm verification program.
    a. The alarm verification operation is selectable by zone for smoke detectors and by individual devices for smoke sensors.
    b. The activation of any smoke detector within its zone initiates the alarm verification program.
2. Smoke sensors act as intelligent and addressable devices. The smoke sensor converts the condition of it’s smoke sensing chamber to an analog value. This analog value is digitized and transmitted to the FACP(s).
    a. Actual smoke density and temperature measurements are referenced from average sample measurements and are compared to programmable values of threshold sensitivity.
    b. Sensor “dirty” and “excessively dirty” trouble conditions are reported automatically through a maintenance advisory and alert program procedure.
3. System individually identifies each addressable initiating device and other addressable monitor functions using multiplexing techniques.
4. System is capable of individually operating each alarm notification appliance, and other control functions, using multiplexing techniques.
5. Alarms are processed by the system at 3 levels of priority:
    a. Fire alarms have the highest priority.
    b. Other alarms that require interaction by the attendant have the second level of priority.
    c. Monitored points which do not require interaction by the attendant are the third level of priority.
6. Access to the system functions are controlled thru at least 3 levels of access security to prevent program modifications or use by unauthorized personnel.
7. Alarms, supervisory signals, and trouble signals are distinctively and descriptively annunciated.
8. Switches for silencing audible trouble and supervisory signals transfers the audible signal to a lamp or other visible indicator adjacent to the switches.
9. All system visual and audible trouble signals and visible indication of their restoration is indicated at the PSS.
    a. Each building’s visual and audible trouble signals and visible indication of their restoration is indicated at its PPSS.
10. Monitoring of ground fault conditions indicate a ground fault trouble condition at the PSS.
11. Summary reports are displayed and printed at the PSS upon appropriate keyboard or function command.
12. Life safety control-by-event functions are retained in a non-volatile programmable memory and are not alterable through normal operation of the system.
    a. The life safety control-by-event control points may be manually operated at any time by authorized personnel thru appropriate system commands.

b. Dedicated switches in the remote annunciator/control centers (RA/CCs) allow personnel to manually operate specific pre-programmed life safety control-by-event control points.

c. Life safety control-by-event functions are printed and displayed at the PSS.

13. User programmable control-by-event functions may be programmed thru appropriate system commands to automatically activate any user programmable control point upon a status change from any programmable monitor point.

a. The user programmable control-by-event control points may be manually operated at any time by the authorized personnel thru appropriate system commands.

b. Dedicated switches in the RA/CCs allows personnel to manually operate each pre-programmed user programmable control-by-event control point.

c. Assigned messages, date and time are printed and displayed at the PSS for the control points activated by the user programmable control-by-event function.

14. User programmable parameters for automatic time-initiated functions (start/stop, on/off, secure/access, etc.) may be added, omitted and altered thru appropriate system commands.

a. The time-initiated user programmable control points may be manually operated at any time by authorized personnel thru appropriate system commands.

b. Dedicated switches in the RA/CCs allows personnel to manually operate each pre-programmed user programmable time-initiated control point.

c. Assigned messages, date and time are printed and displayed at the PSS for the control points activated by the time-initiated control point.

B. The PSS activates immediately and performs its alarm functions upon receipt of system alarm condition thru actuation of automatic or manual initiating devices:

1. The PSS sounds its audible alarm and illuminates its system alarm lamp or flashing display.

a. The PSS displays the point and type of alarm condition.

b. The PSS prints the assigned message with date and time on the printer for the point in alarm.

2. The fire department is automatically called.

3. An authorized person at the PSS presses the acknowledge button which silences its audible alarm and causes a print-out and CRT display of the assigned message for the point in alarm with date, time and an acknowledge prefix.

C. Life Safety Control-By-Event Functions: The PSS, PPSSs and ICUs immediately perform life safety control-by-event functions upon system alarm condition:

1. Audible alarm signal sounds:

a. As indicated.

b. An authorized person may silence any alarm signal in progress through a silence command, but subsequent actuation of non-addressable initiating devices in other zones cause the system to resound and record the alarm. Subsequent actuation of another addressable initiating device also causes the system to resound and record the alarm.

c. An authorized person may activate the alarm notification appliances on selected floors, and all floors, each building, and all areas of the facility.

1. Visual indicators in the RA/CC at the PSS indicate on/off status of the alarm notification appliances.

2. Visual alarm notification appliances illuminate and flash a fire warning signal.
3. Fail safe door lock mechanisms release so that associated doors may be opened.
4. Selected HVAC equipment (fans, air handling units) shut down.
5. Fire dampers and smoke dampers close.
6. Heat and smoke roof vents open when the associated smoke detecting devices are actuated. Visual indicators in the RA/CCs illuminate, indicating which roof vents are open.

D. Personnel at remotely located emergency fire telephones may communicate with the attendant at the PSS via private line emergency fire telephone system.

1. Supervision of emergency telephone circuit wiring and wiring for audible and visual signal indicator indicates trouble conditions at the master telephone and PSS.

E. An authorized person manually resets system at conclusion of alarm condition. When an alarm condition is corrected, a print-out and display occurs at the PSS stating the assigned reset message for the point in alarm with the date, time and reset suffix.

F. Primary and Secondary Power Supplies:

1. Failure of primary power supplies automatically transfers the affected portions of the system to the secondary power supplies.
2. Utilizing the secondary battery power supplies, the system operates under maximum normal load conditions for 24 hours and then is capable of operating all alarm notification appliances used for evacuation for 5 minutes.
3. Upon restoration of primary power supply, the system reverts to normal operation without loss, attendant intervention, or manual re-start procedures.

G. Monitoring Integrity of Installation Conductors and Other Signaling Channels:

1. Performance of Signaling Line Circuits:

a. Circuits from PSS to PPMCU's: NFPA 72, Class A, Style 7. A print-out and display occurs to identify trouble conditions.

b. Circuits from PPMCU's and ICUs to Addressable Devices: NFPA 72, Class B, Style 4. A print-out and display occurs to identify trouble conditions.

2. Performance of Initiating Device Circuits :
   a. Circuits from PPMCU’s and ICUs to Initiating Devices (Fire Alarm): NFPA 72, Class B, Style C. A print-out and display occurs to identify trouble conditions.
3. Performance of Notification Appliance Circuits:
   a. Circuits from PPMCU’s and ICUs to Notification Appliances: NFPA 72, Class B, Style Y. A print-out and display occurs to identify trouble conditions.
4. Monitoring Integrity of Power Supplies:
   a. An audible and visual alarm, display and print-out indicates failure of the primary (main) power supplies, within the system, at the PSS.
   b. The system also monitors the secondary (battery) power supplies for battery trouble conditions (low voltage/no batteries, high current and charging current).

H. Interconnection of Fire Safety Control Functions:
   1. Monitoring of wiring to the protected premises fire safety function relays and appliances causes a print-out and display to occur at the PSS to identify trouble conditions.

1.04 MODIFICATIONS TO EXISTING SYSTEM

A. Provide ICU, signal initiating devices, notification appliances, etc. as shown on the drawings so that system within new Maintenance Building operates in same manner as described for existing Buildings 1, 2. Upgrade and provide new panels (including existing FCC - Head End), modules and accessories in system as indicated in drawings. Provide smoke sensors/detectors, heat sensors/detectors, horn/visual, initiating appliances in existing buildings (as part of replacement) and new building. Upgrades and modifications shall match compatibility with projected/future system. Coordinate with existing local Fire Alarm Vendor:

Fire, Security and Sound Systems, Inc.
4 Avis Drive – Suite 110.
Latham, New York 12110.
Phone: 518-250-4364.

1.05 DESCRIPTION OF COMPLETED SYSTEM

A. The system shall continue to operate for Buildings 1and 2 as outlined in DESCRIPTION OF EXISTING SYSTEM.

B. The system in Main Building shall operate as outlined in DESCRIPTION OF EXISTING SYSTEM with the following exceptions:
   1. The remote annunciator at the main facility shall be equipped to allow attendant to perform all of the same monitor and control functions as the attendant at the remote annunciator in Building 1,2.

2. ICU in Main Building shall be equipped with communicator module and accessories as required for direct connection to EST-IRC monitoring and control system.
3. Alarm conditions from fire alarm initiating devices other than smoke detectors are annunciated immediately on the system. Alarm conditions from smoke detectors are confirmed thru actuation of the system's alarm verification program.

1.06 SUBMITTALS

A. Waiver of Submittals: The "Waiver of Certain Submittal Requirements" in Section 013300 does not apply to this Section.

B. Preliminary Submittal: Existing system test report.

C. Submittals Package: Submit the shop drawings, product data, and quality control submittals specified below at the same time as a package.
1. Company Field Advisor Letter: With the submittals package include a letter from the Company Field Advisor stating that he/she has reviewed the Submittals Package for accuracy and completeness, and approves all materials and installation methods included in the Submittals Package.

D. Shop Drawings:
1. Composite wiring and/or schematic diagrams of the modifications as proposed to be installed (standard diagrams will not be acceptable).
   a. Indicate circuits which are power-limited if power-limited wiring is proposed for use.
   b. For 2-hour fire rated cable assemblies show proposed routes and installation details (include UL classification data, listing and system number).
   c. Include transient surge and lightning protection grounding details for signaling line circuits, initiating device circuits, and ac power conductors entering and leaving each fire alarm control panel.

E. Product Data:
1. Catalog sheets, specifications and installation instructions.
2. Bill of materials.
3. Detailed description of completed system operation. Format similar to DESCRIPTION OF COMPLETED SYSTEM.
4. Include for each system component which utilizes batteries the battery ampere-hour capacity recommended for each component by the Company producing the system, for the specified duration.
5. Statement from the Company producing the system, for each size and type of single conductor and multiconductor cable proposed for use, indicating that the electrical characteristics meet the requirements of the Company.
6. Data from the Company furnishing the products, proving that detection devices that receive their power from the initiating device circuit or a

signaling line circuit of a fire alarm control unit are UL listed for use with the control unit.

a. Submit data proving that the software and firmware is listed for use with the control panel.

b. Submit data proving that the initiating devices are listed for the intended application. Also for specific applications, such as:

1) Smoke door release accomplished directly from the smoke detecting device, show listing for release service.

2) Air duct smoke detecting devices, showing listing indicating complete range of air velocities, temperature and humidity expected at the device when the air handling system is operated.

3) Smoke detecting devices installed in supply air duct downstream of the fan and filters, show detector listed for the air velocity present.

4) For smoke detecting devices installed in return air system, show listing for the air velocity present where the air leaves each smoke compartment, or in the duct system before the air enters the return air system common to more than one smoke compartment.

c. Submit data proving that relays and appliances connected to the fire alarm system which are used to initiate control of fire safety functions are listed for the purpose.

d. Submit data proving that the method of monitoring the connection between the fire alarm system and controlled electrical and mechanical systems for integrity is listed for the purpose.

7. Detailed description of procedure proposed to test individual initiating devices.

a. Include product information pertaining to the test equipment that will be used to perform the tests.

b. Include certified statement that the proposed test method meets the test requirements of NFPA 72 and UL 268 (cite reference to the applicable NFPA and UL paragraphs).

F. Quality Control Submittals:

1. Copy of license required by New York State General Business Law Article 6-D for installing Fire Alarm Systems.

a. Also include copy of identification card issued by the Licensee for each person who will be performing the Work.

2. Company Field Advisor Data: Include:

a. Name, business address and telephone number of Company Field Advisor secured for the required services.

b. Certified statement from the Company listing the qualifications of the Company Field Advisor.

c. Copy of NICET Letter of Approval indicating Level III or higher Fire Alarm Systems certification.

d. Services and each product for which authorization is given by the Company, listed specifically for this project.

G. Contract Closeout Submittals:
   1. System acceptance test report.
   2. Certificates:
      a. Affidavit, signed by the Company Field Advisor and notarized, certifying that the system meets the contract requirements and is operating properly.
      b. NFPA Record of Completion (NFPA 72 Figure 1-6.2.1) for the modifications.
   3. Operation and Maintenance Data:
      a. Deliver 2 copies, covering the installed products, to the Director's Representative. Include:
         1) Operation and maintenance data for each product.
         2) Complete point to point wiring diagrams of the modifications as installed. Identify all conductors and show all terminations and splices. (Identification shall correspond to markers installed on each conductor.)

1.07 QUALITY ASSURANCE

A. UL Listing: The system products for the modifications shall be listed in the UL Fire Protection Equipment Directory under product category "Control Units System (UOJZ)".

B. Company Field Advisor: Company Field Advisor shall be National Institute for Certification in Engineering Technologies (NICET) certified as Level III or higher Fire Alarm Protection/Fire Alarm Systems Engineering Technician.

   1. Secure the services of a Company Field Advisor from the Company of the existing system for a minimum of 24 working hours at the contract site for the following:
      a. Render advice and witness test of existing system.
      b. Render advice regarding modifications to the system.
      c. Assist in reprogramming the system.
      d. Witness final system test and then certify with an affidavit that the modifications were installed in accordance with the contract documents and are operating properly.

1.08 MAINTENANCE

A. Spare Parts:
   1. 5 percent spare of each type initiating device.
   2. 5 percent spare of each type notification appliance.
   3. 5 percent spare of each type protective device.

PART 2 PRODUCTS

2.01 PEER-TO-PEER NETWORK

A. Network: Equip the fire alarm control panels and other network devices with network interface modules able to function with the existing network communication bus signaling line circuit.

B. Fire Alarm Control Panels/Interconnected Control Units: Edwards (EST-3 or latest platform):
   1. Base selection of each fire alarm control panel upon its capacity and capabilities to the specific requirements of the system at the panels' location.
   2. Equip the approved fire alarm control panels to function as the PPMCU's and ICU's.
   3. Permanently record the installed software and firmware version number within each fire alarm control panel.
   4. 14 gage metal cabinet. Size as recommended by the Company producing the system.
      a. Control switches, inaccessible behind hinged and locked door.
      b. Alarm display and lamps visible when door is closed.
   5. Annunciator (or display) which individually identifies addressable devices and identifies groups of non-addressable (if any) devices by zones.
   6. Do not load visual alarm appliance circuit outputs to more than 70 percent of the FACP's power limited rating.
   7. Input circuits suitable for operation on 120 Vac primary (main) power supply and 24 Vdc secondary (battery) power supply.
   8. 24 Vdc Secondary (Battery) Power Supplies: Sealed, lead-acid gelled electrolyte or maintenance free lead-calcium batteries:
      a. Ampere-hour capacity to operate for the same duration and conditions as the existing system.
      b. Battery charger with charging characteristics as recommended by battery manufacturer.
      c. Meters for battery voltage and charging current.
      d. Batteries and charger integrally mounted or separate cabinet mounted as recommended by the company producing the system.
   9. Accessories as required for each FACP perform its required functions upon failure of network communications.
   10. Transient surge and lightning protection for signaling line circuits, initiating device circuits, and ac power conductors entering and leaving each fire alarm control panel:
      a. Signaling Line Circuits and Initiating Device Circuits: UL listed to Standard 497B; Edwards' LTP.
      b. AC Power Conductors: Edwards' TSP.

C. Remote Auxiliary Power Supplies: Edwards' BPS:
   1. 14 gage surface mounted metal cabinet. Size as recommended by the Company producing the system.
   2. Control switches, inaccessible behind hinged and locked door.
   3. Input circuit suitable for operation on 120 Vac primary (main) power supply.
   4. Regulated and filtered 24 Vdc output.

5. 24 Vdc Secondary (standby) Power Supply: Sealed, lead-acid gelled electrolyte or maintenance free lead-calcium batteries:
   a. Ampere-hour capacity to operate under load conditions specified in SYSTEM DESCRIPTION.
   b. Battery charger with charging characteristics as recommended by battery manufacturer.
   c. Meters for battery voltage and charging current.
   d. Batteries and charger integrally mounted or separate cabinet mounted as recommended by the Company producing the system.
6. Activated by host FACP via signaling line circuit loop thru addressable modules:
   a. Addressable control monitor activates the power supply outputs.
   b. Addressable monitor module senses power supply trouble conditions.
7. Supervised power supply, battery, and notification appliance circuits.

D. Remote Addressable Network Modules(RANM):
1. Individual Addressable Module (IAM): Edwards' SIGA-CT1, SIGA-CT2, SIGA-MM1, SIGA-WTM, SIGA-UM.
2. Addressable Zone Adapter Module Control and Monitor Relays (ZAM): Edwards' SIGA-CC1, SIGA-CC2, SIGA-UM, SIGA-CR.
3. Include 24V dc auxiliary circuit(s) as required by RANM type to suit relay operations for control, monitoring, or supervisory functions; or interconnection of fire safety control functions.

E. Remote Annunciator/Control Centers (RA/CCs): Edwards' 2-3 ANN/D, 2-6 ANN/D, 3-ANN – or as approved:

1. Surface mounted enclosure or,
2. Flush mounted enclosure or,
3. Desk mounted enclosure.
4. LCD which is capable of displaying all system points.
5. Master enable/disable key switch for all control switches behind hinged and locked door having windows for visibility of system functions.
6. Annunciator modules for visual indication of specific life safety control-by-event functions:
   a. Status of alarm notification appliances.
7. Annunciator modules for visual indication of specific user programmable control-by-event functions specified in DESCRIPTION OF COMPLETED SYSTEM. Identify each visual indicator with appropriate message.
8. Annunciator modules for visual indication of speaker status.
9. Switch modules for manual operation of specific life safety control-by-event control points:
   a. Alarm notification appliances.
10. Switch modules for manual operation of each user programmable control-by-event control point which is utilized for this project.
11. Switch modules for manual operation of each user programmable automatic time-initiated control point which is utilized for this project.

2.02 REMOTE FIRE SERVICE DEVICES

A. Fire Warden Remote Floor Communication Station Telephones: EST-IRC series with:
   1. Flush mounted cabinet.
   2. Surface mounted cabinet.
   3. Telephone handset attached to unit with armored cable.
   4. Lockable door.
   5. Non-lockable door.
   6. Door having break-rod feature to open.
   7. Buzzer and visual indicator to indicate call from existing master telephone.
   8. Front of door labeled “Fire Warden Station”.
   9. Permanently imprinted instructions for use and operation of the telephone. Include warning to call 911 or pull nearest manual fire alarm station in event that emergency call is not answered.

B. Fire Service Jacks and Telephones:
   1. Remote Telephone Jack Stations: EST series.
   2. Telephone Handsets: EST series.
   3. Storage Racks/Cabinets: EST series.

2.03 INITIATING DEVICES

A. General:
   1. Fire detection devices that receive their power from the initiating device circuit or a signaling line circuit of a fire alarm control unit shall be listed for use with the control unit.
   2. Where individually identifiable and as specified, use only addressable devices as required, if not available from the Company producing the system, either:
      a. Use non-addressable devices and individually wire each device to the FACP’s as separate monitor points, making each non-addressable device individually identifiable, or:
      b. Employ remote addressable network modules to make each non-addressable device individually addressable. Complete modules, accessories, wiring and devices shall be included.
      c. **ALL Initiating Devices shall be addressable type and compatible with components for future Fire Alarm system upgrades.**

B. Ceiling Mounted Sensors (Intelligent, Addressable, or as required):
   1. General:
      a. Heat sensors, ionization smoke sensors, and photoelectric smoke sensors shall have common mounting base which accommodates interchanging of the different type sensors.
   2. Smoke Sensors:
      a. Ionization Type: EST series.
      b. Photoelectric Type: EST series.

1) Photoelectric type smoke sensor shall have initial sensitivity level of 3.2.

c. Multi-Sensor Type:

1) Photoelectric/Heat: EST series.

2) Photoelectric/Ionization/Heat: EST series.

d. Remote Alarm Indicator For Use With Smoke Sensors: EST Series.

e. Smoke detector/carbon monoxide combination sensor or detector.

3. Heat Sensors:

a. 135 degrees F (fixed temperature): EST series.

b. 135 degrees F (fixed temperature/R.O.R.): EST series.

C. Air Duct Smoke Sensors (Intelligent, Addressable, or as required):

1. Photoelectric Type: EST series.

a. Listed for the air velocity present at each air duct smoke sensor’s location.

b. Sampling tube to suit installation.

c. Local relay (for fire safety control functions from duct detector when applicable):

1) Relay operation programmable from FACP.

2) Form C contact(s) rated minimum 1A @ 28 Vdc power-limited, 1/2A @ 120V ac nonpower-limited.

3) 24 Vdc auxiliary power circuit(s) as required to suit relay operation and function.

2. Remote Alarm Indicator For Use With Air Duct Smoke Sensors: LED type indicator mounted on single gang stainless steel faceplate.

3. Remote Alarm Indicator And Test Switch For Use With Air Duct Smoke Sensors: LED type indicator and key operated switch mounted on single gang stainless steel faceplate.

D. Manual Fire Alarm Boxes:

1. Addressable:

a. Single Action Pull Type: EST series.

b. Security Type (Key Operated): EST series. Furnish 2 keys with each station. Furnish 2 tools for installing and servicing the stations (vandal resistant fasteners).

E. Security (Addressable):

1. Magnetic Switches: EST Series.

2.04 NOTIFICATION APPLIANCES

A. General:

1. Audible signal appliances shall be UL 464 listed:

a. Classified “Public” or “Private Mode Only” to suit application.

b. Marked “F.A. Service” or “F.A. Service - Private Mode Only” to suit application.

2. Visual signal devices shall be UL listed:
   a. For private mode applications, UL 1638 “Fire Protective Visual Signaling Appliance”.
   b. For public mode applications, UL 1971 “Signaling Devices for the Hearing Impaired”.
   c. For wall mounting or ceiling mounting to suit application.

B. Audible/Visual Appliances:
1. Type AVA: Edwards series, with:
   a. Xenon flashtube strobe:
      1) AVA-15/75:15/75 candela.
      2) AVA-30/75: 30/75 candela.
      3) AVA-110: 110 candela.
   b. Clear lens having FIRE imprinted thereon in red letters, or clear lens with red base having FIRE imprinted thereon in white letters.
   c. Audible alarm notification appliance:
      1) Type as indicated on the drawings.
      2) Front mounted, if bells or horns.
   d. Surface or flush mounted enclosure as indicated on the drawings.

C. Horns: EST Series, with:
1. Surface or flush mounted type as indicated on the drawings.
2. Basic grille type except where projector type is indicated on the drawings.
3. Weatherproof model where installed in damp or wet locations.

D. Chimes: EST Series, Modular Chimes.

E. Visual Appliances:
1. Type VA: EST Series, with:
   a. Xenon flasher:
      1) VA-15/75:15/75 candela.
      2) VA-30/75: 30/75 candela.
      3) VA-110: 110 candela.
   b. Clear lens having FIRE imprinted thereon in red letters, or clear lens with red base having FIRE imprinted thereon in white letters.
   c. Surface or flush mounted enclosure as indicated on the drawings.

2.05 PROTECTIVE DEVICES

A. Pull Station Protective Shield: Clear Lexan shield and red frame covering manual pull station. When shield is lifted a battery powered warning horn is activated. The horn is silenced by lowering and realigning the shield.
1. Edwards’ STI Series Stopper II, including:
   a. Batteries.
   b. Weatherproof shield for damp and wet locations.
   c. Mounting accessories.

B. Protective Grid for Bells: Edwards' Full Cast Grid.

C. Steel Web Guards.

1. For Smoke and Heat Detecting Devices: EST Series.
2. Steel Web Guards for General Application (Horns, Strobes, Beam Detectors, Speakers, Bells, etc.):
   a. Construction:
      1) All welded 7 gage wire.
      2) Nickel plated finish with lacquer coating.
   b. Manufacturer: Chase Security Systems, Inc. 5947 North Milwaukee Avenue, Chicago, IL 60646, Telephone (773) 775-7148, FAX (773) 594-0078 or approved vendor.

2.06 TERMINAL STRIP CABINETS

A. Lockable, vandal resistant, surface mounted cabinets constructed of 14 gage steel, size as recommended by the Company producing the system. Equip cabinets with barrier type double screw terminals rated 300 V minimum, meeting UL 94 requirements for materials classed 94 V-0. Use identification strips, tags or labels to identify each conductor. Paint cabinets fire department red and stencil on front in 1/2 inch high white letters, the purpose of each terminal strip cabinet.

2.07 POWER-LIMITED INSULATED CONDUCTORS

A. All electrical characteristics shall meet the requirements of the Company producing the system (conductor to conductor capacitance, dc resistance, velocity of propagation etc.).

B. Multiconductor Cables N.E.C. Type FPLP, FPLR, FPL:

1. Insulated copper conductors.
2. Conductors twisted, shielded and jacketed as recommended by the Company producing the system.
3. Voltage rating of not less than 300 volts (Voltage rating not marked on cable except where cable has multiple listings and voltage marking is required for one or more of the listings).

C. Other types of cables may be used in accordance with N.E.C. Table 760-61 "Cable Uses and Permitted Substitutions", as approved, if listed as being suitable for the purpose.

2.08 NONPOWER-LIMITED INSULATED CONDUCTORS

A. All electrical characteristics shall meet the requirements of the Company producing the system (conductor to conductor capacitance, dc resistance, velocity of propagation, etc.).

B. Conductors twisted, shielded and jacketed as recommended by the Company producing the system.

C. Single Conductors:

1. No. 18 and No. 16 AWG: Insulated copper conductors suitable for 600 volts, N.E.C. types KF-2, KFF-2, PAFF, PTFF, PF, PFF, PGF, PGFF, RFH-2, RFHH-2, RFHH-3, SF-2, SFF-2, TF, TFF, TFN, TFFN, ZF, ZFF.
2. Larger Than No. 16 AWG: Insulated copper conductors suitable for 600 volts, in compliance with N.E.C. Article 310.
3. Conductors with other types and thickness of insulation may be used if listed for nonpower-limited fore alarm circuit use.

D. Multiconductor Cables N.E.C. Types NPLFP, NPLFR, NPLF:
1. No. 18 and No. 16 AWG: Insulated copper conductors rated 600 volts, N.E.C. types KF-2, KFF-2, PAFF, PTFF, PF, PFF, PGF, PGFF, RFH-2, RFHH-2, RFHH-3, SF-2, SFF-2, TF, TFF, TFN, TFFN, ZF, ZFF.
2. No. 14 AWG and Larger: Insulated copper conductors suitable for 600 volts, one of the types listed in N.E.C. Table 310-13 or one that is identified for nonpower-limited fire alarm circuit use.
3. Marking: NPLFP, NPLFR, and NPLF marked to suit listings and marked with a maximum usage voltage rating of 150 volts.

2.09 MC CABLE

A. Metal-Clad Cable, N.E.C. Type MC:
1. All electrical characteristics shall meet the requirements of the Company producing the system (conductor to conductor capacitance, dc resistance, velocity of propagation, etc.).
2. Conductors twisted, shielded and jacketed as recommended by the Company producing the system.
3. Interlocked flexible galvanized steel armor sheath conforming to UL requirements for type MC metal clad cable.
4. Insulated copper conductors suitable for 600 volts.
   a. No. 18 and No. 16 AWG: A type listed in N.E.C. Table 402-3 with a maximum operating temperature not less than 90°C, or types KF-2, KFF-2, PAF, PAFF, PTFF, PF, PFF, PGF, PGFF, PTF, PTFF, SF-2, SFF-2, ZF, ZFF.
   b. No. 14 AWG and Larger: One of the types listed in N.E.C. Table 310-13 or of a type identified for use in Type MC cable.
5. Acceptable Companies: AFC Cable Systems Inc., Coleman Cable Co.
6. Connectors for MC cable: AFC Fitting Inc.'s AFC Series, Arlington Industries Inc.'s Saddle Grip, or Thomas & Betts Co.'s Tite-Bite with anti-short Bushings.

2.10 2-HOUR FIRE RATED CABLE ASSEMBLIES

A. Fire Alarm Circuit Integrity (CI) Cable: Cables identified as meeting the requirements for circuit integrity shall have the additional classification using the suffix "CI". Examples: FPLP-CI, FPLR-CI, FPL-CI, NPLFP-CI, NPLFR-CI, NPLP-CI (outdoor applications as required).

1. Cables shall have a minimum 2-hour fire resistance rating for the cable when tested in accordance with the Standard for Tests of Fire Resistive Cables-UL 2196.

B. MI Cable: AFC Cable Systems’ MI cable, or BICC/Pyrotenax Mineral Insulated System 1850 Pyrotenax Cable:
1. All electrical characteristics shall meet the requirements of the Company producing the system (conductor to conductor capacitance, dc resistance, velocity of propagation, etc.).
2. Solid copper conductors, twisted, shielded as recommended by the Company producing the system.
3. Seamless copper sheath.
4. Two hour fire resistive rating UL system classified, listed in UL Building Materials Directory product category Fire Resistive Cables (FHJR).
5. PVC or HDPE jacketing (where shown on drawings).
6. Accessories as required for a complete system to suit installation conditions.

2.11 SIGNS, LABELS, MARKERS, AND NAMEPLATES

A. Procedure Sign:
1. Complete Unit: Card holder with aluminum or stainless steel frame, plexiglass front and sheet aluminum card backing plate. Minimum size card 8 x 10 inches. For each procedure sign, furnish l blank card in holder and 5 spare blank cards suitable for typing future procedures thereon.
2. Revised Cards: Size as required to fit existing holder, suitable for typing revised procedures thereon.

B. Nameplates: Precision engrave letters and numbers with uniform margins, character size minimum 3/16 inch high.
1. Phenolic: Two color laminated engraver’s stock, 1/16 inch minimum thickness, machine engraved to expose inner core color (white).
2. Aluminum: Standard aluminum alloy plate stock, minimum .032 inches thick, engraved areas enamel filled or background enameled with natural aluminum engraved characters.
3. Materials for Outdoor Applications: As recommended by nameplate manufacturer to suit environmental conditions.

C. Fire Alarm Signs: 9 x 12 inches, metal, with the words “FIRE ALARM” imprinted thereon in white letters upon a red background. Include a white arrow pointing down, left or right showing the route to, or actual location of the fire alarm stations. Frame the outside edges of the signs in red and white diagonal stripes.
1. Sign Mounting Styles:
   a. Single face for mounting flat against the wall.
   b. Double faced for mounting extended from wall.

D. Manual Fire Alarm Box Signs: Precision engrave letters with uniform margins, character size minimum 1/8 inch high, stating “LOCAL ALARM ONLY - NOT

CONNECTED TO FIRE DEPARTMENT-CALL FIRE DEPARTMENT BY TELEPHONE".

1. Phenolic: Two color (red surface, white core) laminated engraver's stock, 1/16 inch minimum thickness, machine engraved to expose inner core color.

E. Markers:

a. Premarked self-adhesive; W.H. Brady Co.'s B292, B708, Ideal Industries' Mylar/Cloth wire markers, or Markwick Corp.'s permanent wire markers, Plastic Extruded Parts Inc.'s Flexible Sleeve or ID Band Markers, or Thomas and Betts Co.'s E-Z Code WSL self-laminating.

b. Other Styles: To suit application by W.H. Brady Co., Ideal Industries, Marwick Corp., Plastic Extruded Parts, Inc., or Thomas and Betts Co.

2.12 SYSTEM KEYING

A. All system locks, key switches, etc., shall match existing keying.

2.13 ACCESSORIES

A. Include accessories required to perform the functions summarized in DESCRIPTION OF COMPLETED SYSTEM and indicated on the drawings.

PART 3 EXECUTION

3.01 VERIFICATION OF CONDITIONS

A. Testing Existing System:

1. Prior to modifying the system, make the following tests to ascertain the operating condition of the existing system:
   a. Test spare zones that will be utilized for the work.
   b. Test active zones which will be modified.
   c. Test PSS, PPSS and ICU functions associated with the modifications.
2. Test shall be witnessed by the Company Field Advisor and the Director's Representative.
3. Conduct tests that are disruptive to facility personnel after normal working hours as directed.
4. Prepare a written report for the Director's Representative indicating the repairs required, if any, to make the existing sub-systems function properly.
5. Repairs to the existing sub-systems are not included in the Work unless requested by Order on Contract.

3.02 INTERRUPTIONS TO EXISTING SUB-SYSTEMS

A. Maintain the existing system in its present condition to the extent possible while installing new Work.

B. Prior to making changes or removals relative to the existing system, notify the Director's Representative and have procedures approved.

C. When changes or removals are required to the existing fire alarm system such that it's ability to act as a fire alarm system is impaired, provide a temporary fire alarm system so that the building is protected at all times by a functioning fire alarm system. Notify Building Supervisor (thru Director's Representative) of proposed temporary measures and scheduling. Both the proposed temporary measures and the scheduling must be approved by the Director's Representative.

D. Provide signs, instructions and alternate methods for reporting a fire.

3.03 INSTALLATION

A. Install the Work in accordance with the Company's printed instructions unless otherwise indicated.

B. Reprogram the system to include new monitor and control points and update existing system program to include changes and additions requested by facility.
   1. Obtain from the facility personnel through the Director's Representative, a list of desired system program changes, additions, etc.

C. Do not install smoke detecting devices until the Work (including cleaning) of all trades in the area has been completed. Protect installed smoke detecting devices from airborne dust and debris.

D. Mount smoke detecting devices, and seal air holes in the back of the devices (including interior of raceways and holes associated with installation of boxes and raceways) so that air flow from inside of housing or from the periphery of the housing will not prevent entry of smoke during a fire or test condition. Seal air holes with gaskets, expanding silicone foam, or other sealants as approved.

E. Wiring For Survivability:

   1. Signals from manual fire alarm boxes and other fire alarm initiating devices within a building transmitted over the same signaling line circuit shall not interfere with the manual fire alarm box signals when both types of initiating devices are operated at the same time.
   2. Failure of equipment or a fault on one or more installation wiring conductors of one notification appliance circuit shall not result in functional loss of any other notification appliance circuit.
   3. Connect PPSSs, ICUs and other system components requiring a primary power supply to dedicated branch circuits.
      a. Do not connect PPSS's and ICUs to a 2 pole device which can trip both poles at once, such as a 2 pole circuit breaker with handle tie (omit the tie).
   4. Splices in wiring in vertical risers is prohibited, except when the length of conductors approximate 150 feet in vertical risers, terminal strip cabinet may be used. Exception: For 2-hour fire rated cable assembly, use UL listed methods to maintain 2-hour rating.

5. Avoid splices in horizontal runs. When splices are necessary, use junction boxes. Exception: For 2-hour fire rated cable assembly, use UL listed methods to maintain 2-hour rating.
   a. Make splices with mechanical or hydraulic type pressure connectors. The use of wire nuts is prohibited.
   b. Paint cover of terminal strip cabinets and junction boxes fire department red.
6. Protect notification appliance circuits and other circuits necessary for the operation of the notification appliance circuits from the point at which they exit the fire alarm panel until the point that they enter the notification zone that they serve using one or more of the following methods:
   a. A 2-hour fire rated cable assembly.
   b. A 2-hour rated shaft or enclosure.
   c. A 2-hour rated stairwell in a building fully sprinklered.

7. Wiring Class A, Style 6, 7, D, E, or Z Signaling Line Circuits, Initiating Device Circuits and Notification Appliance Circuits: Do not install both legs of Class A, Style 6, 7, D, E, or Z circuits in same cable assembly, enclosure, or raceway back to PPSS's or ICUs.
   a. Run return legs along another route to obtain maximum benefit of these alternate path circuits.

F. Existing RA/CC: Rearrange existing annunciator and switch modules to accommodate new annunciator and switch modules.
   1. Install new annunciator and switch modules in same function location as existing annunciator and switch modules. Arrange the new and existing modules in logical sequential order.

G. Identification, Labeling, Marking:
   1. Procedure Sign Adjacent to PSS: Install revised card in existing procedure sign to suit modifications made to procedures.
   2. Code Locator: Install revised card in existing holders. Provide new holders with revised cards to suit modifications.
   3. Alarm Notification Appliance Locator:
      a. New RA/CCs: Install new zone locator adjacent to RA/CCs.
      b. Existing RA/CCs: Install revised card in existing zone locators to suit modifications made to the RA/CCs.
   4. Nameplates:
      a. Install on each manual fire alarm box a nameplate stating: Floor number, and location (1st Fl, east, etc.).
      b. Install adjacent to each RA/CC annunciator module and switch module a nameplate indicating function of module.
      c. Label the device used as the circuit disconnecting means for the dedicated branch circuits serving the system "FIRE ALARM CIRCUIT CONTROL" with white letters on a red background.
         1) Install on each system component requiring a primary power supply a label stating the location of its circuit disconnecting means.

d. Install nameplate on each remote alarm indicator stating the location of its smoke detecting device and the area protected by the smoke detecting device and its function.

5. Power-Limited Circuits: Mark circuits at terminations, indicating that circuit is a power-limited fire protective signaling circuit.
6. Identification of Manual Stations Which Do Not Transmit Alarm to Fire Department: Install manual fire alarm box sign above each manual fire alarm box.
7. Identification of Circuits: Identify wires and cables by system and function in interconnection cabinets, and FACP's to which they connect with premarked, self-adhesive, wraparound type markers. Designations shall correspond with point to point wiring diagrams.
8. Battery Data: Insert a copy of the battery warranty in each battery compartment and mark on batteries the date placed in service.
9. Alarm Verification Warning Marking: Affix to the inside of each FACP, a list indicating:
   a. Affected circuits.
   b. Delay (seconds).
   c. The smoke detector model numbers used.

H. Fire Suppression Systems Signal Attachments:
1. Install tamper switches.
2. Install sprinkler system signal attachments.

I. Protective Devices: Install where indicated on the drawings.
1. Where devices are installed on wood or masonry surfaces, attach protective devices directly to the surface with vandal resistant fasteners.
2. Where devices are installed on suspended ceiling provide additional supports in the ceiling, such as channel support system, angle iron or additional runner bars. Fasten the additional supports rigidly to the ceiling runner bar system. Attach frame or brackets of protective device to the supports with vandal resistant fasteners. Install metal spacers between the protective device frame and the supports so that the ceiling tiles will not be a part of the support system.
3. Use finishing collar between surface and protective device where protective device cannot be mounted tight against surface due to job conditions.

3.04 FIELD QUALITY CONTROL

A. Preliminary System Test:
1. Preparation: Have the Company Field Advisor adjust the portion of the system applicable to the Work, and then operate it long enough to assure that it is performing properly.
2. Run a preliminary test for the purpose of:
   a. Determining whether the system is in a suitable condition to conduct an acceptance test.
   b. Checking and adjusting equipment.
   c. Training facility personnel.

B. System Acceptance Test:
   1. Preparation: Notify the Director’s Representative at least 3 working days prior to the test so arrangements can be made to have a Facility Representative witness the test.
   2. Supply all equipment necessary for system adjustment and testing.
   3. Make the following tests:
      a. Test the portion of the system applicable to the Work in accordance with NFPA 72, Chapter 7.
         1) Follow test methods stated in Table 7-2.2.
         2) Record results on NFPA 72 Figure 1-6.2.1 Record of Completion.
      b. Test system operation step by step as summarized in DESCRIPTION OF COMPLETED SYSTEM.
   4. Submit written report of test results signed by Company Field Advisor and the Director’s Representative. Also complete an NFPA Record of Completion.
      a. Mount a copy of the written report of test results, and the NFPA 72 Record of Completion in plexiglass enclosed frame assemblies adjacent to the PSS (one framed assembly for each report).

C. Conduct tests that are disruptive to facility personnel after normal working hours as directed.

3.05 INSULATED CONDUCTOR SCHEDULE - TYPES AND USE

A. Signaling Line Circuits, Initiating Device Circuits and Notification Appliance Circuits:
   1. Power-Limited Circuits: For interior wiring (in raceways) use power-limited insulated multiconductor cable types specified in PART 2 except where a 2-hour fire rated cable assembly is required.
      a. Number of conductors and conductor size as recommended by the Company producing the system, except that conductor size shall not be less than No. 18 AWG for signaling line circuits and not less than No. 16 AWG for initiating device circuits and notification appliance circuits.
      b. Using Non-power-Limited Wiring On Power-Limited Circuits: Wiring size and types specified for NONPOWER-limited circuits may be used for power-limited circuits if power-limited circuits are reclassified and the power-limited markings are eliminated. Refer to NEC Article 760-52(a) Exception No. 3.
   2. Nonpower-Limited Circuits: For interior wiring (in raceways) use nonpower-limited insulated single conductors or multiconductor cable types specified in PART 2 except where a 2-hour fire rated cable assembly is required.
      a. Number of conductors and conductor size as recommended by the Company producing the system, except that conductor size shall not be less than No. 18 AWG for signaling line circuits, not less than No. 16 AWG for initiating device circuits, and not less than No. 14 AWG for notification appliance circuits.

3. Where wiring is specifically indicated on drawings not to be run in raceway, use metal-clad cable type MC (concealed, unless otherwise indicated), except where a 2-hour fire rated cable assembly is required.

B. Signaling Line Circuit Between PPMCU’S and Networked ICU’s (Network communication bus, voice communication bus, and telephone):
   1. Use 2-hour rated cable assembly.
      a. Where MI or MC/CI cable is used and run in areas subjecting cable to corrosion use PVC or HDPE jacketed cable (nonmetallic jacketed cable is not suitable for use in ducts, plenums or other spaces used for environmental air). Use nonmetallic jacketed cable in the following areas:

C. Signaling Line Circuits Between PPMCU’s and Networked ICUs: Use Type LAN-O or type LAN-I optical fiber cables (Section 271525) in raceways for network communication bus circuits.

D. Other Circuits for Which 2-hour Fire Rated Cable Assembly is Specified or Indicated:
   1. Use CI cable in rigid steel conduit, MI cable, MC/CI cable or FPL/EMT.
      a. Where MI or MC/CI cable is used and run in areas subjecting cable to corrosion use PVC or HDPE jacketed cable (nonmetallic jacketed cable is not suitable for use in ducts, plenums or other spaces used for environmental air). Use nonmetallic jacketed cable in the following areas:

E. Control Circuits Associated with the Fire Alarm System: use Class 1, 2, and 3 wiring specified in Section 260519.

F. Primary Supply Circuits and Secondary Supply Wiring:
   1. Use electric light and power wiring specified in Section 260519.

END OF SECTION

MAINT. 1 STRUCTURAL DESIGN DATA				
CONSTRUCTION LOADING			20 psf	1603.2
WIND LOAD	BUILDING CATEGORY		II	1604.5
	BASIC WIND SPEED		90 MPH	1609.3
	Iw		1.0	ASCE 7-05
	EXPOSURE CATEGORY		B	1609.4
	INTERNAL PRESSURE COEF.		+/- 0.18	ASCE 7-05
	COMPONENTS & CLADDING	ZONE 1	+10/-16	ASCE 7-05
		ZONE 2	+10/-29	ASCE 7-05
		ZONE 3	+10/-42	ASCE 7-05
SNOW LOAD	Pg		40 psf	1608.2
	Ce		1.0	ASCE 7-05
	Is		1.0	ASCE 7-05
	Ct		1.0	ASCE 7-05
	Pf		28 psf	ASCE 7-05

MAINT. 2 STRUCTURAL DESIGN DATA				
CONSTRUCTION LOADING			20 psf	1603.2
WIND LOAD	BUILDING CATEGORY		II	1604.5
	BASIC WIND SPEED		90 MPH	1609.3
	Iw		1.0	ASCE 7-05
	EXPOSURE CATEGORY		B	1609.4
	INTERNAL PRESSURE COEF.		+/- 0.18	ASCE 7-05
	COMPONENTS & CLADDING	ZONE 1	+10/-16	ASCE 7-05
		ZONE 2	+10/-29	ASCE 7-05
		ZONE 3	+10/-42	ASCE 7-05
SNOW LOAD	Pg		40 psf	1608.2
	Ce		1.0	ASCE 7-05
	Is		1.0	ASCE 7-05
	Ct		1.0	ASCE 7-05
	Pf		28 psf	ASCE 7-05

STORE ROOM STRUCTURAL DESIGN DATA				
CONSTRUCTION LOADING			20 psf	1603.2
WIND LOAD	BUILDING CATEGORY		II	1604.5
	BASIC WIND SPEED		90 MPH	1609.3
	Iw		1.0	ASCE 7-05
	EXPOSURE CATEGORY		B	1609.4
	INTERNAL PRESSURE COEF.		+/- 0.18	ASCE 7-05
	COMPONENTS & CLADDING	ZONE 1	+10/-16	ASCE 7-05
		ZONE 2	+10/-29	ASCE 7-05
		ZONE 3	+10/-42	ASCE 7-05
SNOW LOAD	Pg		40 psf	1608.2
	Ce		1.0	ASCE 7-05
	Is		1.0	ASCE 7-05
	Ct		1.0	ASCE 7-05
	Pf		28 psf	ASCE 7-05

GENERAL NOTES

1. PROVIDE NEW 2" PRE-INSULATED METAL WALL PANELS OVER ENTIRE EXISTING T1-11 WOOD WALL PANELS. COLOR TO BE SELECTED BY DIRECTOR'S REPRESENTATIVE. REMOVE EXISTING NON-ASBESTOS ASPHALT SHINGLES AND PROVIDE PREFORMED METAL ROOF SYSTEM. SEE ROOF PLANS/A-101 AND DETAILS/A-104 & A-105.
2. REMOVE AND REPAIR EXISTING DAMAGED WOOD WALL PANELS AND PROVIDE PLYWOOD SUBSTRATE AS REQUIRED TO INSTALL NEW 2" INSULATED METAL WALL PANEL SYSTEM. SEE MAINTENANCE-2 BUILDING ELEVATIONS/A-101. (450 SFT.)
3. PROVIDE NEW METAL CANOPY ROOF AND FRAMING BETWEEN MAINTENNCE BUILDINGS 1 & 2. SEE PLANS, ELEVATIONS/A-101 & DETAILS/S-101
4. REMOVE AND REPLACE EXISTING METAL DOORWAY CANOPIES WITH NEW METAL CANOPIES AND FRAMING. AS REQUIRED TO PROTECT EXIT DOORWAYS. SEE ELEVATIONS/A-101.(TOTAL 4 CANOPIES)
5. THE CONTRACTOR SHALL REMOVE AND RE-INSTALL ANY MOVABLE OBSTRUCTIONS FROM BUILDING EXISTING WALLS, DOORS AND WINDOWS AS REQUIRED TO INSTALL NEW INSULATED METAL WALL PANEL SYSTEM. SEE ELEVATIONS/A-101.
6. REMOVE EXISTING AND PROVIDE NEW METAL COMMERCIAL GUTTERS & DOWN SPOUTS AT EAVES. PROVIDE DOWN SPOUTS AT EACH EAVE CORNER(TOTAL 4 PER BUILDING)SEE ELEVATIONS/A-101 AND DETAIL 2/A-105.

GENERAL NOTES

7. THE CONTRACTOR SHALL VERIFY ALL DIMENSIONS IN THE FIELD.
8. DISCONNECT EXISTING FIRE SUPRESSION SYSTEM AND INSTALL (2)6"X16"X¼" STEEL PLATES TO EXISITNG CEDER SIDING BEFORE NEW INSULATED METAL SIDING. THEN INSTALL SUPRESSION CONDUIT STRUCT, BOX AND BELL THRU NEW INSULATED METAL PANEL TO STEEL PLATES AS RECOMMENDED BY METAL PANEL MANUFACTURER. SEE MAINTENANCE BUILDING 1 WEST ELEVATION.
9. INSTALLER'S QUALIFICATIONS: THE WORKMEN AND SUPERVISORS PERFORMING THE WORK SHALL BE PERSONALLY EXPERIANCE IN DRY CHEMICAL EXTINGUISHING SYSTEMS AND SHALL HAVE BEEN REGULARLY EMPLOYEED BY A COMPANY ENGAGING IN THE INSTALLATION OF DRY CHEMICAL SYSTEMS FOR A MINIMUM OF FIVE YEARS AND SHALL, UPON REQUEST, FURNISH TO THE DIRECTOR THE NAMES AND ADDRESSES OF 5 SIMILAR PROJECTS WHICH THEY HAVE BEEN WORKED ON DURING THE LAST 3 YEARS.
10. PROVIDE PRE-ENGINEERED VERMOUNT STYLE SNOW GUARD SYSTEM. SEE DETAIL 5/A-104.
11. THE CONTRACTOR SHALL HAVE QUALIFIED ELECTRICIAN REMOVE AND RE-CONNECT EXTIORIOR CONDUIT FROM BUILDING EXISTING WALLS, AS REQUIRED TO INSTALL NEW INSULATED METAL WALL PANEL SYSTEM. COORDINATE NEW LOCATIONS WITH OGS DIRECTOR'S REPRESENTATIVE. SEE WEST ELEVATIONS/A-101.

GENERAL NOTES

12. PROVIDE NEW LED WALL MOUNTED LIGHTS ON MAINTENANCE BUILDINGS 1 & 2 ONLY. SEE ELEVATIONS/A-101, DETAIL D6/A-103.(TOTAL 7 LIGHTS)
13. PROVIDE INSULATED OVERHEAD GARAGE DOORS AND METAL TRACKS. SEE ELEVATIONS/A-101, DOOR DETAILS, DOOR SCHEDULE AND DOOR TYPE/A-103.(TOTAL 7 DOORS)
14. PROVIDE HOPES OR OPTIMUM SECURED SINGLE HUNG WINDOWS WITH SECURITY SCREENS IN STORE ROOM BUILDING ONLY. SEE STORE ROOM WEST ELEVATION/A-101, WINDOW SCHEDULE, WINDOW TYPE/A-103. AND DETAILS 4 & 5/A-105(TOTAL OF 4 WINDOWS)
15. CONSTRUCTION SHALL TAKE PLACE ONLY ON ONE BUILDING AT A TIME. COORDINATE SCHEDULE WITH OGS FACILITY REPRESENTATIVE.
16. WORK ON THE SECURED STOREROOM BUILDING SHALL BE COMPLETED AND SECURED BY THE END OF THE EACH DAY. COORDINATE WORK WITH OGS FACILITY REPRESENTATIVE.

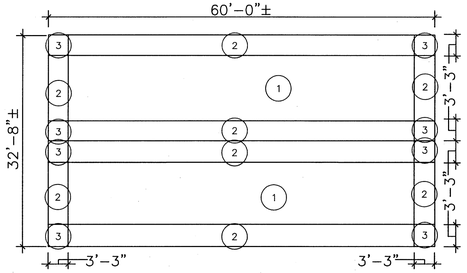

MAINTENANCE SHOP-1 LOAD PLAN

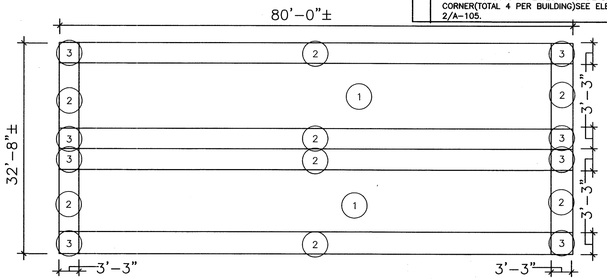

MAINTENANCE SHOP-2 LOAD PLAN

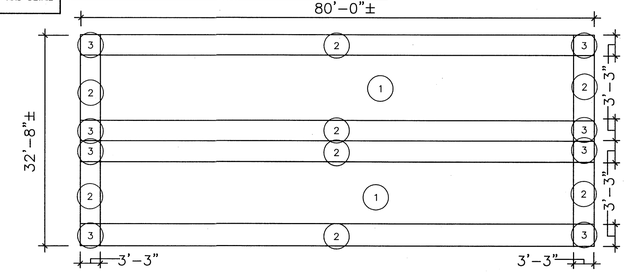

STORE ROOM LOAD PLAN

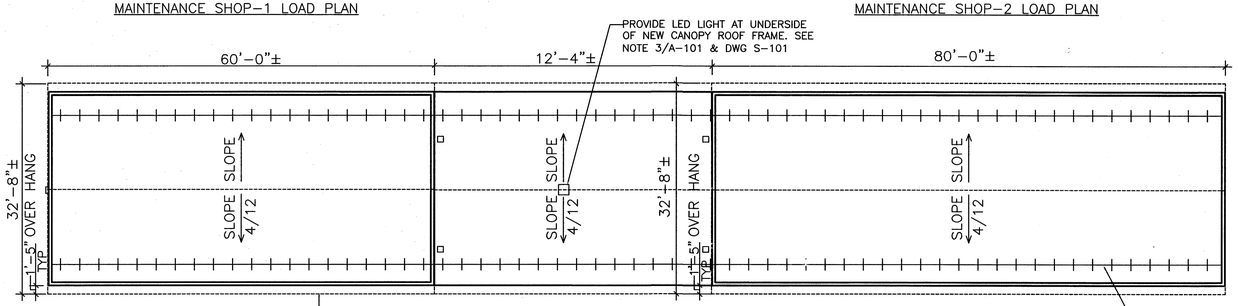

FLOOR/ROOF PLAN MAINTENANCE SHOP-1

CANOPY ROOF PLAN NEW CANOPY ROOF SEE NOTE 3/A-101 & DWG S-101

FLOOR/ROOF PLAN MAINTENANCE SHOP-2

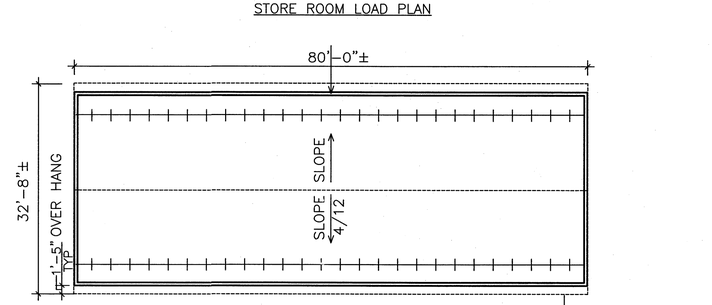

FLOOR/ROOF PLAN STORE ROOM

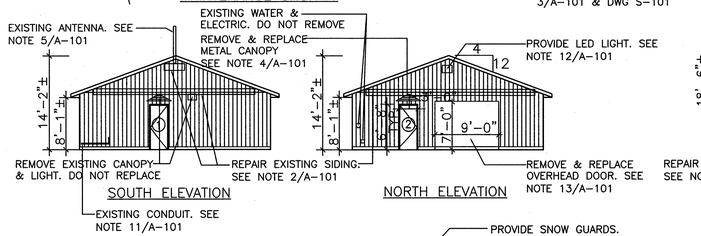

SOUTH ELEVATION

NORTH ELEVATION

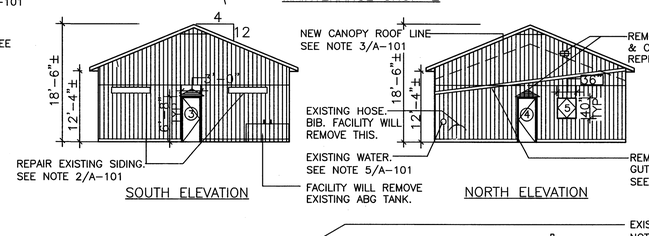

SOUTH ELEVATION

NORTH ELEVATION

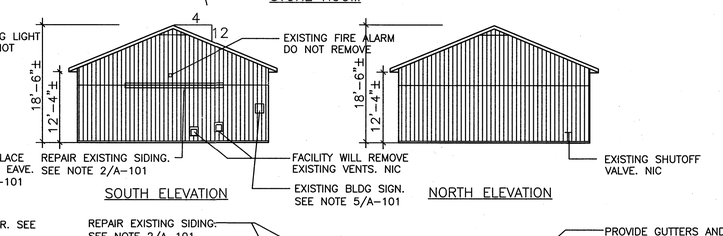

SOUTH ELEVATION

NORTH ELEVATION

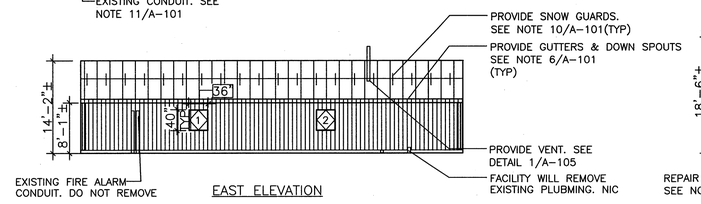

EAST ELEVATION

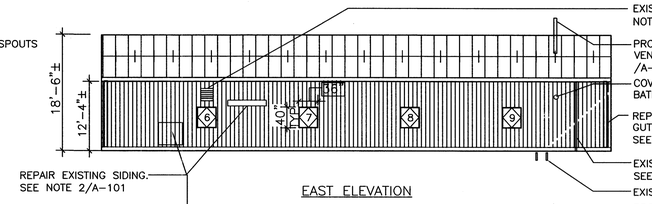

EAST ELEVATION

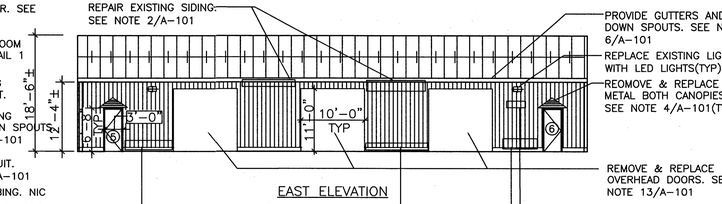

EAST ELEVATION

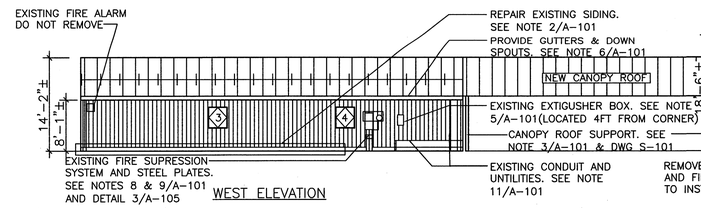

WEST ELEVATION

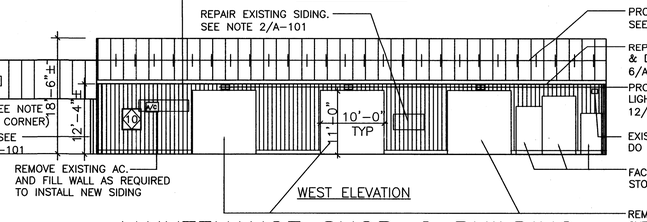

WEST ELEVATION

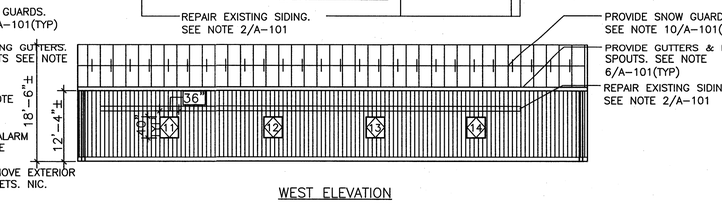

WEST ELEVATION

MAINTENANCE SHOP-1 BUILDING

MAINTENANCE SHOP-2 BUILDING

STOREROOM BUILDING

REFERENCE DRAWING

NYS OFFICE OF GENERAL SERVICES

Serving New York

ANDREW M. CUOMO
Governor
ROANN M. DESTITO
Commissioner

CONSULTANT

FINAL SUBMISSION

WARNING:

THE ALTERATION OF THIS MATERIAL IN ANY WAY, UNLESS DONE UNDER THE DIRECTION OF A COMPARABLE PROFESSIONAL, I.E. ARCHITECT FOR AN ARCHITECT, ENGINEER FOR AN ENGINEER OR LANDSCAPE ARCHITECT FOR A LANDSCAPE ARCHITECT, IS A VIOLATION OF THE NEW YORK STATE EDUCATION LAW AND/OR REGULATIONS AND IS A CLASS 'A' MISDEMEANOR.

CONTRACT:

CONSTUCTION

TITLE:

REPLACE ROOFS, SIDING, DOORS AND WINDOWS

LOCATION:

BROOKWOOD SECURE CENTER
PO BOX 419, CR 29
CLAVERACK, NY 12513

CLIENT:

NYS OFFICE OF CHILDREN AND FAMILY SERVICES

MARK	DATE	DESCRIPTION
	05/29/2015	FINAL SUBMISSION

PROJECT NUMBER:	44980 – C
DESIGNED BY:	Greg McBride
DRAWN BY:	Greg McBride
FIELD CHECK:	Daniel Mac Cormack
APPROVED:	XXXXX

SHEET TITLE:

PLANS AND ELEVATIONS

DRAWING NUMBER:

A-101

SHEET 1 OF 5

May 28,2015 – 7:07am
V:\DesignAndConstr\94494xx\44980\Cadtrch\A-101.dwg

36x24 PLOT SHEET

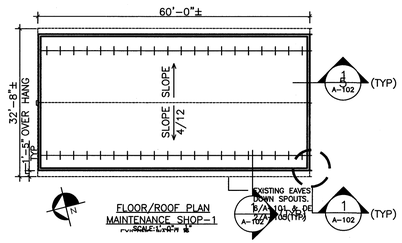

FLOOR/ROOF PLAN
MAINTENANCE SHOP-1
SCALE:1'-0"= 1'

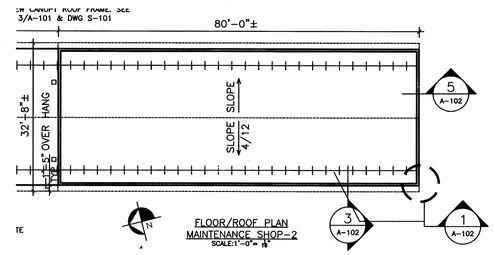

FLOOR/ROOF PLAN
MAINTENANCE SHOP-2
SCALE:1'-0"= 1'

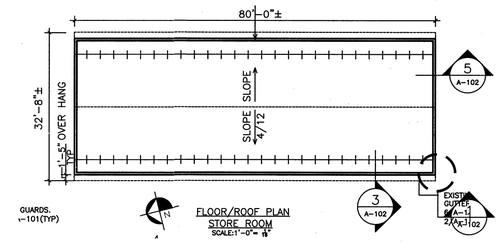

GUARDS.
1-101(TYP)

FLOOR/ROOF PLAN
STORE ROOM
SCALE:1'-0"= 1'

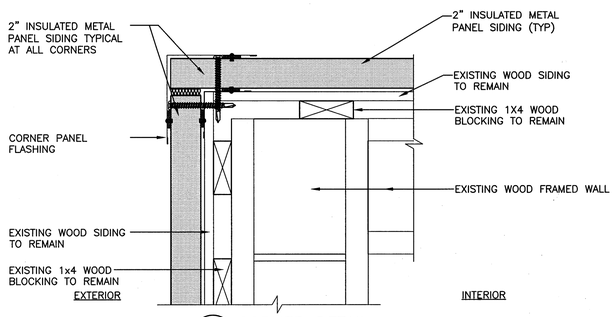

1 CORNER DETAIL
3" = 1'-0"

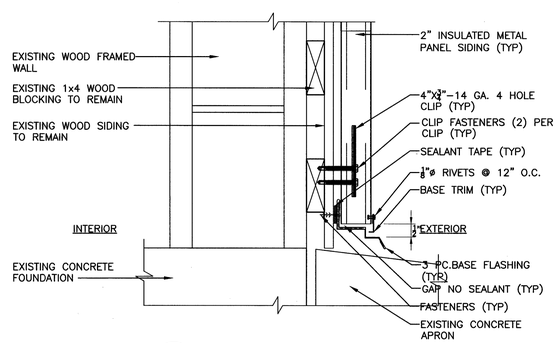

3 DETAIL AT WALL BASE
3" = 1'-0"

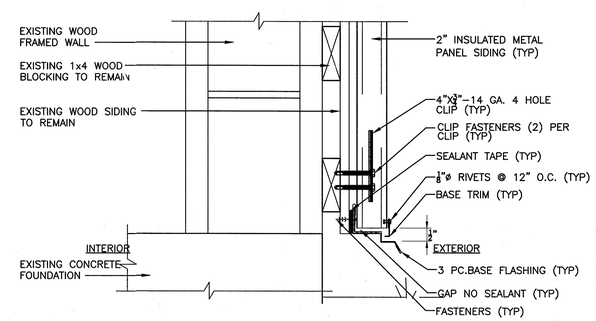

5 DETAIL AT WALL BASE
3" = 1'-0"

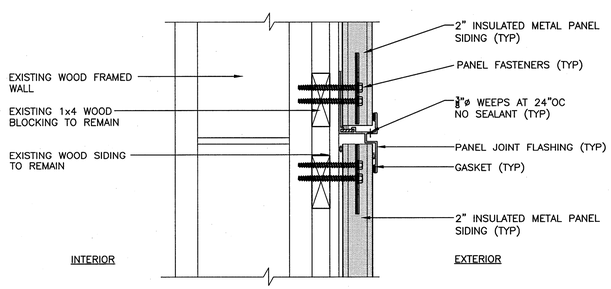

2 DETAIL AT PANEL JOINT
3" = 1'-0"

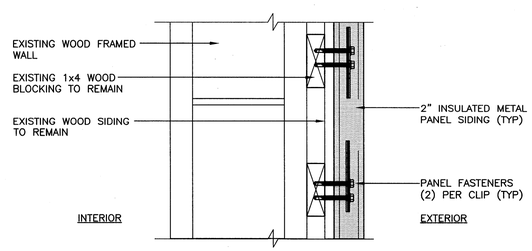

4 WALL INFILL DETAIL
3" = 1'-0"

GENERAL NOTES

1. PROVIDE NEW 2" PRE-INSULATED METAL WALL PANELS OVER ENTIRE EXISTING T1-11 WOOD WALL PANELS. COLOR TO BE SELECTED BY DIRECTOR'S REPRESENTATIVE. SEE ELEVATIONS & NOTES/A-101

2. REMOVE AND REPAIR EXISTING DAMAGED WOOD WALL PANELS AND PROVIDE PLYWOOD SUBSTRATE AS REQUIRED TO INSTALL NEW 2" INSULATED METAL WALL PANEL SYSTEM. SEE ELEVATIONS/A-101. (450 SFT.)

REFERENCE DRAWING

NYS OFFICE OF GENERAL SERVICES
Serving New York

ANDREW M. CUOMO
Governor
ROANN M. DESTITO
Commissioner

CONSULTANT

FINAL SUBMISSION

WARNING:
THE ALTERATION OF THIS MATERIAL IN ANY WAY, UNLESS DONE UNDER THE DIRECTION OF A COMPARABLE PROFESSIONAL, I.E. ARCHITECT FOR AN ARCHITECT, ENGINEER FOR AN ENGINEER OR LANDSCAPE ARCHITECT FOR A LANDSCAPE ARCHITECT, IS A VIOLATION OF THE NEW YORK STATE EDUCATION LAW AND/OR REGULATIONS AND IS A CLASS 'A' MISDEMEANOR.

STATE OF NEW YORK · ALEXANDER P. D'OREO · 069990 · LICENSED PROFESSIONAL ENGINEER

CONTRACT:
CONSTRUCTION

TITLE:
REPLACE ROOFS, SIDING, DOORS AND WINDOWS

LOCATION:
BROOKWOOD SECURE CENTER
PO BOX 419, CR 29
CLAVERACK, NY 12513

CLIENT:
NYS OFFICE OF CHILDREN AND FAMILY SERVICES

MARK	DATE	DESCRIPTION
	05/29/2015	FINAL SUBMISSION

PROJECT NUMBER:	44980 – C
DESIGNED BY:	Greg McBride
DRAWN BY:	Greg McBride
FIELD CHECK:	Daniel Mac Cormack
APPROVED:	XXXXX

SHEET TITLE:
PRE-INSULATED WALL PLANS AND DETAILS

DRAWING NUMBER:
A-102

SHEET 2 OF 5

May 28,2015 – 10:52am
V:\DesignAndConstr\X449xx\44980\CadArch\A-102.dwg
36x24 PLOT SHEET

DOOR SCHEDULE

DOOR NO.	ROOM NAME	DOOR SIZE W X HT	DOOR SIZE THK	DOOR TYPE	DOOR MATERIAL	DOOR FINISH	DOOR COLOR	FRAME TYPE	FRAME MATERIAL	FRAME FINISH	FRAME COLOR	FRAME DETAIL HEAD	FRAME DETAIL JAMB	FRAME DETAIL SILL	GLAZING TYPE	FIRE RATING	KEYSIDE	DOOR HAND	HDWE GRP	REMARKS	DOOR NO.
01	MAINT SHOP-1 EXTERIOR	3'-0" x 7'-0"	1 3/4"	F	FRP	--	TBD BY FACILITY	A	FRP	FACTORY	TBD BY FACILITY	D1	D2	D6	--	A	--	--	1	--	01
02	MAINT SHOP-1 EXTERIOR	3'-0" x 7'-0"	1 3/4"	F	FRP	--	TBD BY FACILITY	A	FRP	FACTORY	TBD BY FACILITY	D1	D2	D6	--	A	--	--	1	--	02
03	MAINT SHOP-2 EXTERIOR	3'-0" x 7'-0"	1 3/4"	F	FRP	--	TBD BY FACILITY	A	FRP	FACTORY	TBD BY FACILITY	D1	D2	D6	--	A	--	--	1	--	03
04	MAINT SHOP-2 EXTERIOR	3'-0" x 7'-0"	1 3/4"	F	FRP	--	TBD BY FACILITY	A	FRP	FACTORY	TBD BY FACILITY	D1	D2	D6	--	A	--	--	1	--	04
05	STOREROOM EXTERIOR	3'-0" x 7'-0"	1 3/4"	F	STL	--	TBD BY FACILITY	A	STL	FACTORY	TBD BY FACILITY	D1	D2	D6	--	A	--	--	?	PROVIDE 14 GAGE SECURE DOOR	05
06	STOREROOM EXTERIOR	3'-0" x 7'-0"	1 3/4"	F	STL	--	TBD BY FACILITY	A	STL	FACTORY	TBD BY FACILITY	D1	D2	D6	--	A	--	--	--	PROVIDE 14 GAGE SECURE DOOR	06
07	MAINTENANCE BLDG. 1	7'-0" x 9'-0"	1 3/4"	OH	STL	--	TBD BY FACILITY	A	STL	FACTORY	TBD BY FACILITY	D1	D2	D6	--	A	--	--	?	PROVIDE MANUALLY OPERATED GARAGE DOOR	07
08	MAINTENANCE BLDG. 2	10'-0" x 11'-0"	1 3/4"	OH	STL	--	TBD BY FACILITY	A	STL	FACTORY	TBD BY FACILITY	D1	D2	D6	--	A	--	--	--	PROVIDE ELECTRIC OPERATED GARAGE DOORS	08
09	MAINTENANCE BLDG. 2	10'-0" x 11'-0"	1 3/4"	OH	STL	--	TBD BY FACILITY	A	STL	FACTORY	TBD BY FACILITY	D1	D2	D6	--	A	--	--	?	PROVIDE ELECTRIC OPERATED GARAGE DOORS	09
10	MAINTENANCE BLDG. 2	10'-0" x 11'-0"	1 3/4"	OH	STL	--	TBD BY FACILITY	A	STL	FACTORY	TBD BY FACILITY	D1	D2	D6	--	A	--	--	--	PROVIDE ELECTRIC OPERATED GARAGE DOORS	10
11	STORE ROOM BLDG.	10'-0" x 11'-0"	1 3/4"	OH	STL	--	TBD BY FACILITY	A	STL	FACTORY	TBD BY FACILITY	D1	D2	D6	--	A	--	--	?	PROVIDE ELECTRIC OPERATED GARAGE DOORS	11
12	STORE ROOM BLDG.	10'-0" x 11'-0"	1 3/4"	OH	STL	--	TBD BY FACILITY	A	STL	FACTORY	TBD BY FACILITY	D1	D2	D6	--	A	--	--	--	PROVIDE ELECTRIC OPERATED GARAGE DOORS	12
13	STORE ROOM BLDG.	10'-0" x 11'-0"	1 3/4"	OH	STL	--	TBD BY FACILITY	A	STL	FACTORY	TBD BY FACILITY	D1	D2	D6	--	A	--	--	?	PROVIDE ELECTRIC OPERATED GARAGE DOORS	13

WINDOW SCHEDULE

WINDOW NO	WINDOW SIZE WD X HGT	WINDOW TYPE	WINDOW MATL	WINDOW GLAZING TYPE	SCREEN SIZE WD X HGT	SCREEN TYPE	SCREEN MATL	DETAIL HEAD	DETAIL JAMB	DETAIL SILL	REMARKS	WINDOW NO
1	3'-0"x3'-4"	DH	FRP	TYPE M	SEE WINDOW SIZE	--	VINYL	W2	W4	W6	--	1
2	3'-0"x3'-4"	DH	FRP	TYPE M	SEE WINDOW SIZE	--	VINYL	W2	W4	W6	--	2
3	3'-0"x3'-4"	DH	FRP	TYPE M	SEE WINDOW SIZE	--	VINYL	W2	W4	W6	--	3
4	3'-0"x3'-4"	DH	FRP	TYPE M	SEE WINDOW SIZE	--	VINYL	W2	W4	W6	--	4
5	3'-0"x3'-4"	DH	FRP	TYPE M	SEE WINDOW SIZE	--	VINYL	W2	W4	W6	--	5
6	3'-0"x3'-4"	DH	FRP	TYPE M	SEE WINDOW SIZE	--	VINYL	W2	W4	W6	--	6
7	3'-0"x3'-4"	DH	FRP	TYPE M	SEE WINDOW SIZE	--	VINYL	W2	W4	W6	--	7
8	3'-0"x3'-4"	DH	FRP	TYPE M	SEE WINDOW SIZE	--	VINYL	W2	W4	W6	--	8
9	3'-0"x3'-4"	DH	FRP	TYPE M	SEE WINDOW SIZE	--	VINYL	W2	W4	W6	--	9
10	3'-0"x3'-4"	DH	FRP	TYPE M	SEE WINDOW SIZE	--	VINYL	W2	W4	W6	--	10
11	3'-0"x3'-4"	SSH	STL	TYPE 10	SEE WINDOW SIZE	STL	--	W1	W3	W5	PROVIDE 14 GAGE SECURE WINDOW WITH SECURITY SCREEN	11
12	3'-0"x3'-4"	SSH	STL	TYPE 10	SEE WINDOW SIZE	STL	--	W1	W3	W5	PROVIDE 14 GAGE SECURE WINDOW WITH SECURITY SCREEN	12
13	3'-0"x3'-4"	SSH	STL	TYPE 10	SEE WINDOW SIZE	STL	--	W1	W3	W5	PROVIDE 14 GAGE SECURE WINDOW WITH SECURITY SCREEN	13
14	3'-0"x3'-4"	SSH	STL	TYPE 10	SEE WINDOW SIZE	STL	--	W1	W3	W5	PROVIDE 14 GAGE SECURE WINDOW WITH SECURITY SCREEN	14

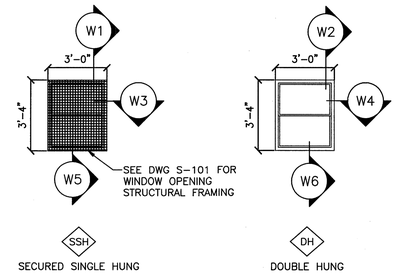

WINDOW TYPES
1/4" = 1'-0"

REFERENCE DRAWING

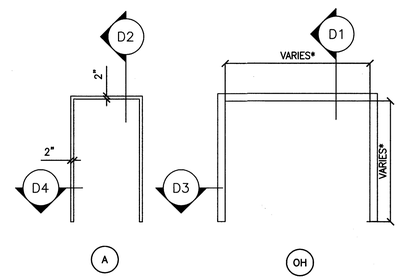

DOOR FRAME TYPES
1/4" = 1'-0"

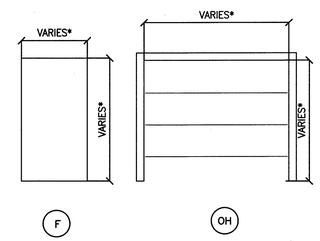

DOOR TYPES
1/4" = 1'-0"

ABBREVIATIONS

FX	FIXED WINDOW	TBD	TO BE DETERMINED
DH	DOUBLE HUNG WINDOW	NIC	NOT IN CONTRACT
F	FLUSH DOOR	POLYISO	POLYISOCYANURATE
FRP	FIBERGLASS REINFORCED PLASTIC	ABG	ABOVE GROUND TANK
STL	STEEL	SSH	SECURED SINGLE HUNG DOOR
TYP	TYPICAL		

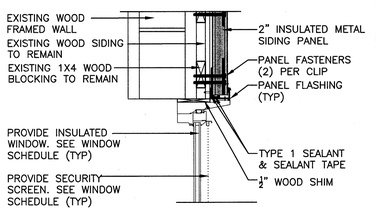

W1 HEAD DETAIL
1 1/2" = 1'-0"

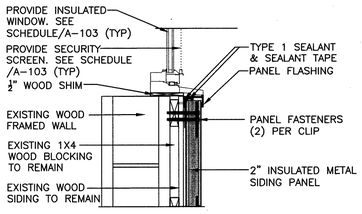

W3 JAMB DETAIL
1 1/2" = 1'-0"

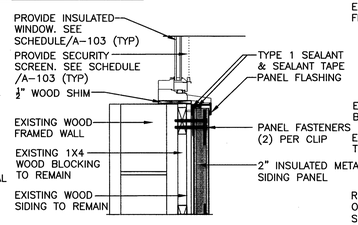

W5 SILL DETAIL
1 1/2" = 1'-0"

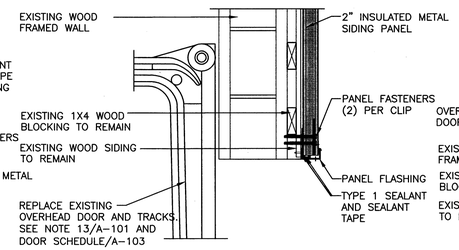

D1 HEAD DETAIL
1 1/2" = 1'-0"

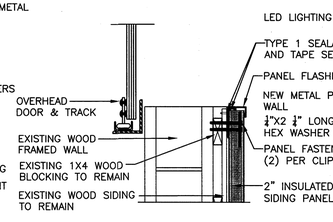

D3 JAMB DETAIL
1 1/2" = 1'-0"

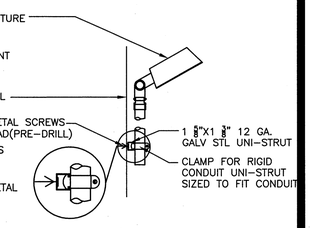

D6 LED LIGHT DETAIL
NS

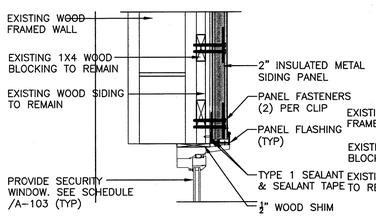

W2 HEAD DETAIL
1 1/2" = 1'-0"

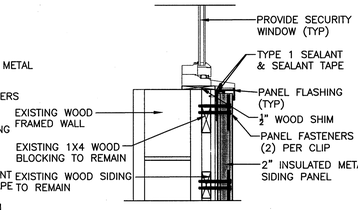

W4 JAMB DETAIL
1 1/2" = 1'-0"

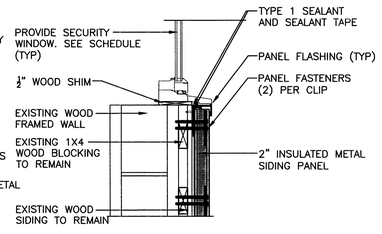

W6 SILL DETAIL
1 1/2" = 1'-0"

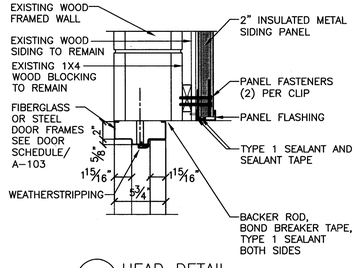

D2 HEAD DETAIL
1 1/2" = 1'-0"

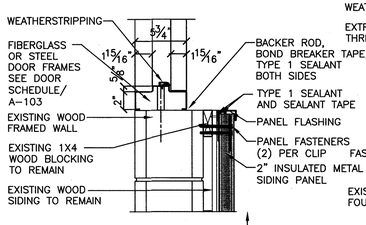

D4 JAMB DETAIL
1 1/2" = 1'-0"

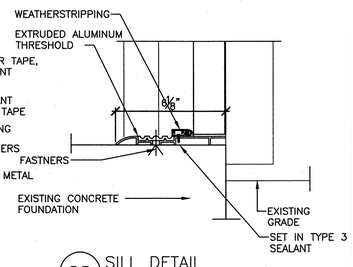

D5 SILL DETAIL
3" = 1'-0"

NYS OFFICE OF GENERAL SERVICES
Serving New York
ANDREW M. CUOMO
Governor
ROANN M. DESTITO
Commissioner

CONSULTANT

FINAL SUBMISSION

WARNING:
THE ALTERATION OF THIS MATERIAL IN ANY WAY, UNLESS DONE UNDER THE DIRECTION OF A COMPARABLE PROFESSIONAL, I.E. ARCHITECT FOR AN ARCHITECT, ENGINEER FOR AN ENGINEER OR LANDSCAPE ARCHITECT FOR A LANDSCAPE ARCHITECT, IS A VIOLATION OF THE NEW YORK STATE EDUCATION LAW AND/OR REGULATIONS AND IS A CLASS 'A' MISDEMEANOR.

STATE OF NEW YORK · ALEXANDER P. DYCE · 069990 · LICENSED PROFESSIONAL ENGINEER

CONTRACT:
CONSTRUCTION

TITLE:
REPLACE ROOFS, SIDING, DOORS AND WINDOWS

LOCATION:
BROOKWOOD SECURE CENTER
PO BOX 419, CR 29
CLAVERACK, NY 12513

CLIENT:
NYS OFFICE OF CHILDREN AND FAMILY SERVICES

MARK	DATE	DESCRIPTION
	05/29/2015	FINAL SUBMISSION

PROJECT NUMBER:	44980 – C
DESIGNED BY:	Greg McBride
DRAWN BY:	Greg McBride
FIELD CHECK:	Daniel Mac Cormack
APPROVED:	XXX

SHEET TITLE:
DOOR, WINDOW SCHEDULES AND DETAILS

DRAWING NUMBER:
A–103

SHEET 3 OF 5

May 28,2015 – 10:54am
V:\DesignAndConstr\P449xx\44980\CadArch\A-103.dwg
36x24 PLOT SHEET

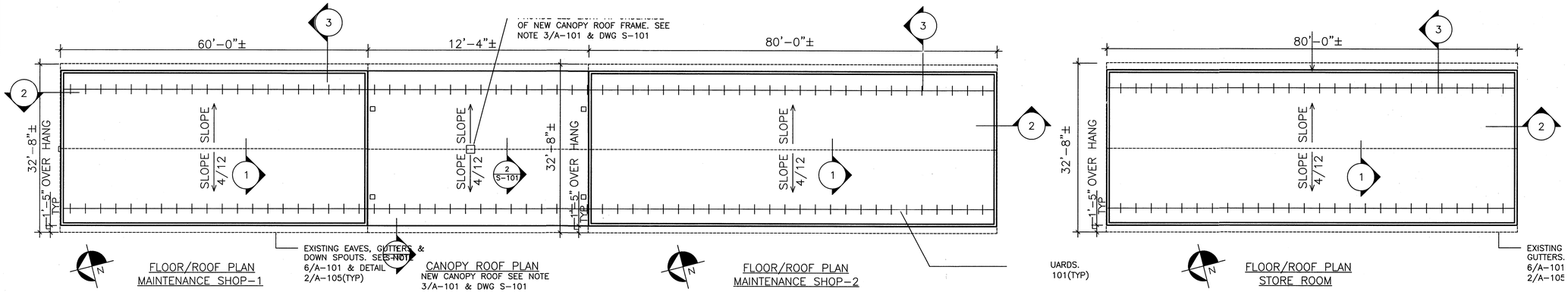

FLOOR/ROOF PLAN
MAINTENANCE SHOP-1

CANOPY ROOF PLAN
NEW CANOPY ROOF SEE NOTE 3/A-101 & DWG S-101

FLOOR/ROOF PLAN
MAINTENANCE SHOP-2

FLOOR/ROOF PLAN
STORE ROOM

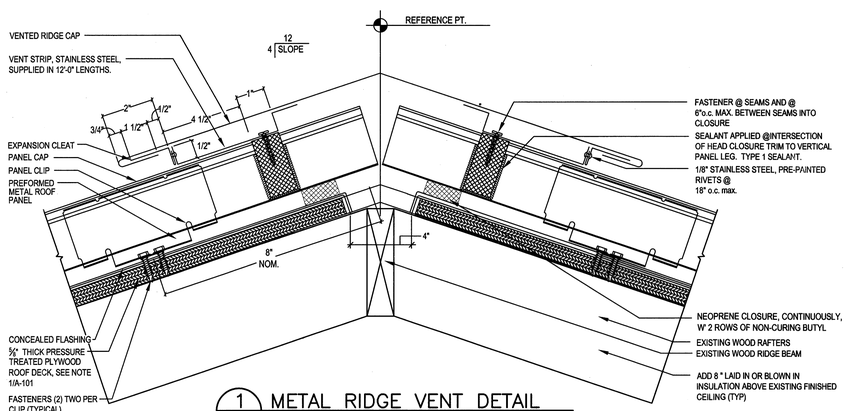

1 A-104 METAL RIDGE VENT DETAIL
SCALE: NTS (ALL BUILDINGS)

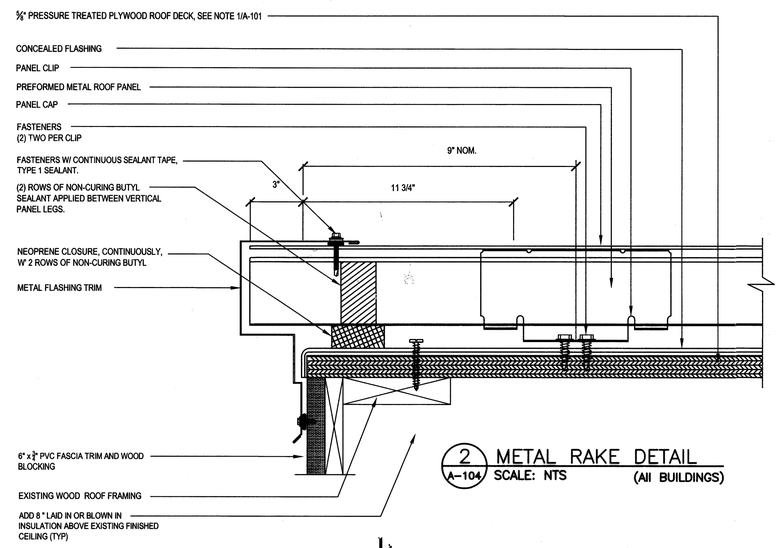

2 A-104 METAL RAKE DETAIL
SCALE: NTS (All BUILDINGS)

REFERENCE DRAWING

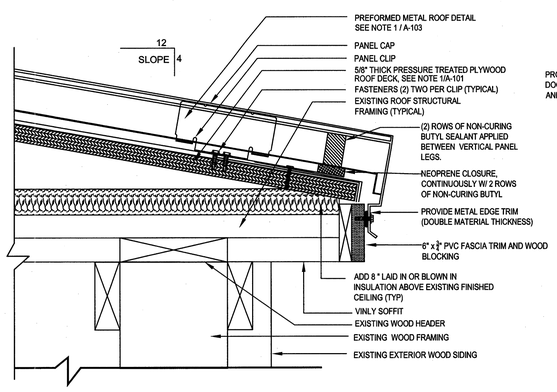

3 A-104 METAL EAVE DETAIL
SCALE: NTS (ALL BUILDINGS)

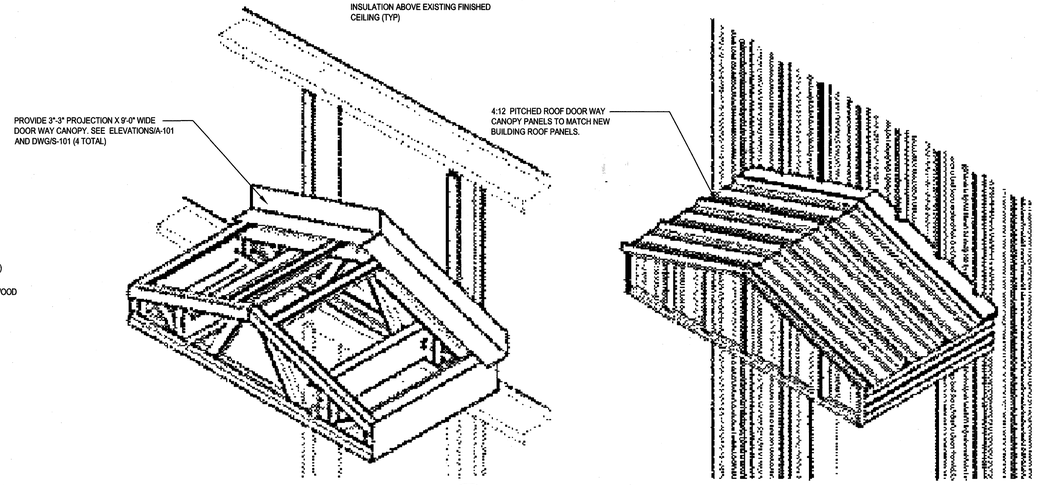

4 A-104 DOOR WAY CANOPY ELEVATIONS
SCALE: NTS (ALL BUILDINGS)

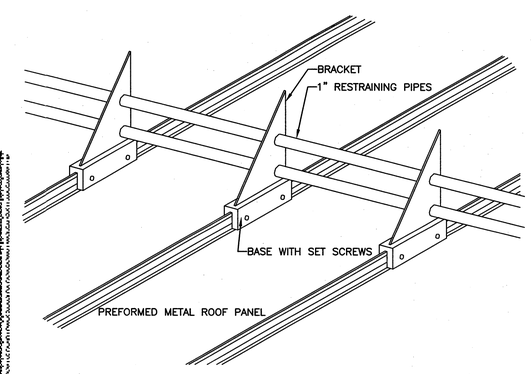

5 A-104 SNOW GUARD DETAIL
SCALE: NTS (ALL BUILDINGS)

NYS OFFICE OF GENERAL SERVICES
Serving New York
ANDREW M. CUOMO
Governor
ROANN M. DESTITO
Commissioner

CONSULTANT

FINAL SUBMISSION

WARNING:
THE ALTERATION OF THIS MATERIAL IN ANY WAY, UNLESS DONE UNDER THE DIRECTION OF A COMPARABLE PROFESSIONAL, I.E. ARCHITECT FOR AN ARCHITECT, ENGINEER FOR AN ENGINEER OR LANDSCAPE ARCHITECT FOR A LANDSCAPE ARCHITECT, IS A VIOLATION OF THE NEW YORK STATE EDUCATION LAW AND/OR REGULATIONS AND IS A CLASS 'A' MISDEMEANOR.

STATE OF NEW YORK · ALEXANDER P. DYKSTRA · 069990 · PROFESSIONAL ENGINEER

CONTRACT:
CONSTRUCTION

TITLE:
REPLACE ROOFS, SIDING, DOORS AND WINDOWS

LOCATION:
BROOKWOOD SECURE CENTER
PO BOX 419, CR 29
CLAVERACK, NY 12513

CLIENT:
NYS OFFICE OF CHILDREN AND FAMILY SERVICES

MARK	DATE	DESCRIPTION
	05/29/2015	FINAL SUBMISSION

PROJECT NUMBER:	44980 – C
DESIGNED BY:	Greg McBride
DRAWN BY:	Greg McBride
FIELD CHECK:	Daniel Mac Cormack
APPROVED:	XXXXX

SHEET TITLE:
ROOF PLANS AND DETAILS

DRAWING NUMBER:
A-104

SHEET 4 OF 5

May 28,2015 – 10:56am
V:\DesignAndConst\P449xx\44980\CadArch\A-104.dwg
36x24 PLOT SHEET

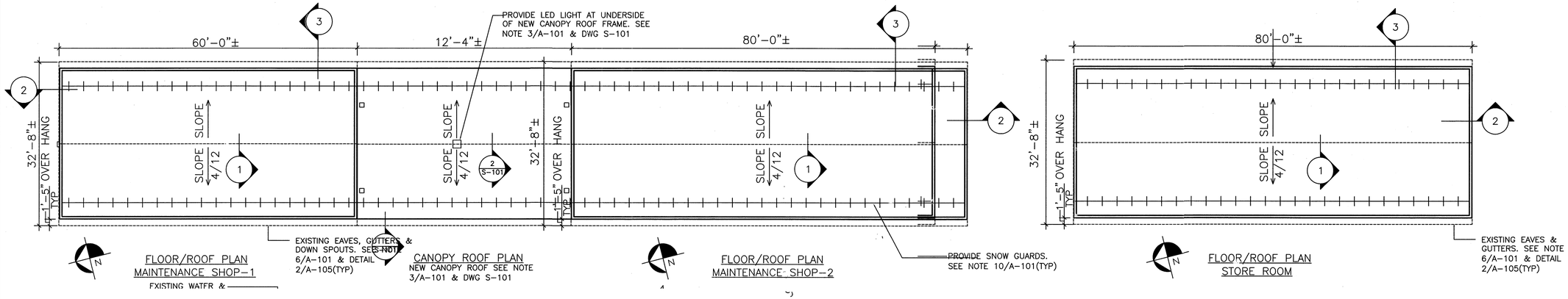

FLOOR/ROOF PLAN
MAINTENANCE SHOP-1

EXISTING WATER &

CANOPY ROOF PLAN
NEW CANOPY ROOF SEE NOTE 3/A-101 & DWG S-101

FLOOR/ROOF PLAN
MAINTENANCE SHOP-2

FLOOR/ROOF PLAN
STORE ROOM

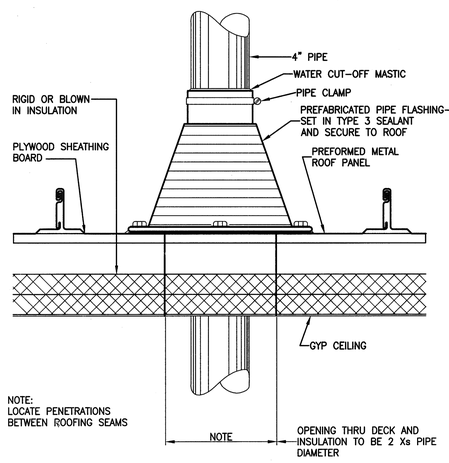

1 A-105 PIPE FLASHING DETAIL
SCALE: 3" = 1'-0"

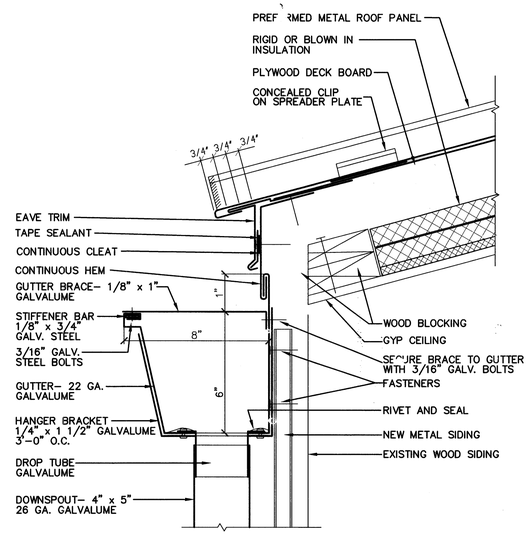

2 A-105 EAVE AND GUTTER DETAIL
SCALE: 3" = 1'-0"

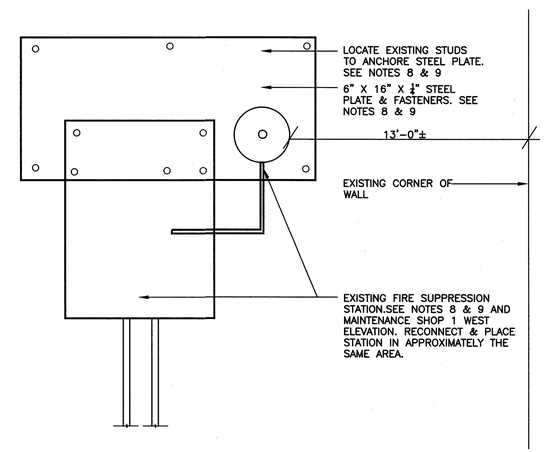

3 A-105 FIRE SUPPRESSION SYSTEM
SCALE: 3"=1'-0" (MAINTENANCE BLDG 1)

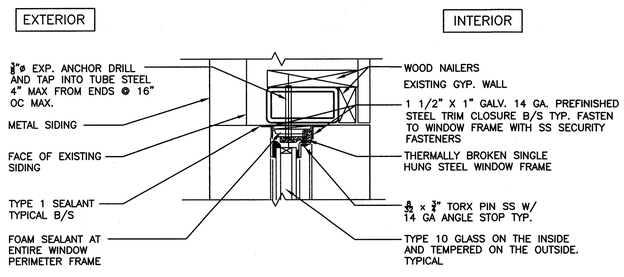

4 A-105 SECURED WINDOW HEAD
SCALE: 3"=1'-0" (STOREROOM BLDG)

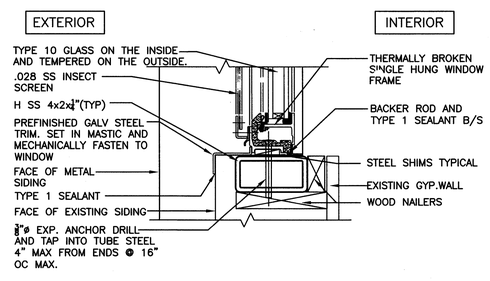

5 A-105 SECURED WINDOW SILL
SCALE: 3"=1'-0" (STOREROOM BLDG)

REFERENCE DRAWING

NYS OFFICE OF GENERAL SERVICES
Serving New York
ANDREW M. CUOMO
Governor
ROANN M. DESTITO
Commissioner

CONSULTANT

FINAL SUBMISSION

WARNING:
THE ALTERATION OF THIS MATERIAL IN ANY WAY, UNLESS DONE UNDER THE DIRECTION OF A COMPARABLE PROFESSIONAL, I.E. ARCHITECT FOR AN ARCHITECT, ENGINEER FOR AN ENGINEER OR LANDSCAPE ARCHITECT FOR A LANDSCAPE ARCHITECT, IS A VIOLATION OF THE NEW YORK STATE EDUCATION LAW AND/OR REGULATIONS AND IS A CLASS 'A' MISDEMEANOR.

STATE OF NEW YORK · ALEXANDER P. DYRAL · 069990 · LICENSED PROFESSIONAL ENGINEER

CONTRACT:
CONSTRUCTION

TITLE:
REPLACE ROOFS, SIDING, DOORS AND WINDOWS

LOCATION:
BROOKWOOD SECURE CENTER
PO BOX 419, CR 29
CLAVERACK, NY 12513

CLIENT:
NYS OFFICE OF CHILDREN AND FAMILY SERVICES

MARK	DATE	DESCRIPTION
	05/29/2015	FINAL SUBMISSION

PROJECT NUMBER:	44980 – C
DESIGNED BY:	Greg McBride
DRAWN BY:	Greg McBride
FIELD CHECK:	Daniel Mac Cormack
APPROVED:	XXXXX

SHEET TITLE:
ROOF PLANS AND DETAILS

DRAWING NUMBER:
A-105

SHEET 5 OF 5

May 28,2015 – 10:58am
V:\DesignAndConst\P449xx\44980\Cad\Arch\A-105.dwg
36x24 PLOT SHEET

GENERAL NOTES

1. DETAILS SHOWN ARE TYPICAL. SIMILAR DETAILS APPLY TO SIMILAR CONDITIONS UNLESS OTHERWISE INDICATED.
2. VERIFY ALL EXISTING CONDITIONS AND DIMENSIONS. REPORT DISCREPANCIES TO THE DIRECTOR'S REPRESENTATIVE.
3. DO NOT CHANGE SIZE NOR SPACING OF STRUCTURAL ELEMENTS.
4. THESE DRAWINGS DO NOT INCLUDE THE NECESSARY COMPONENTS FOR CONSTRUCTION SAFETY. CONSTRUCTION SAFETY IS THE CONTRACTOR'S RESPONSIBILITY.
5. TEMPORARY ERECTION BRACING SHALL BE PROVIDED AS REQUIRED FOR THE SAFETY AND ALIGNMENT OF THE STRUCTURE. BRACING SHALL NOT BE REMOVED UNTIL PERMANENT BRACING OR THE SUPPORTING STRUCTURAL ELEMENTS HAVE BEEN INSTALLED. THESE ELEMENTS INCLUDE, PRECAST CONCRETE PLANK, ROOF DECK AND EXTERIOR MASONRY WALLS. THE BUILDING SHALL BE TRUE AND PLUMB BEFORE CONNECTIONS MAY BE FINALLY BOLTED OR WELDED.
6. THIS WORK HAS BEEN DESIGNED IN ACCORDANCE WITH THE "NEW YORK STATE UNIFORM FIRE PREVENTION AND BUILDING CODE" 2010.

EARTHWORK - SITE WORK

1. NET ALLOWABLE SOIL BEARING CAPACITY = 1,500 P.S.F.

CONCRETE NOTES

1. ALL CONCRETE WORK REPRESENTED BY THESE NOTES AND DETAILS SHALL CONFORM TO THE LATEST REVISION OF THE BUILDING CODE REQUIREMENTS FOR REINFORCED CONCRETE (ACI 318) AND SPECIFICATIONS FOR STRUCTURAL CONCRETE FOR BUILDINGS (ACI 301).
2. CENTER FOOTINGS UNDER COLUMNS, UNLESS NOTED OTHERWISE.
3. WHERE REINFORCING IS NOT SHOWN ON THE DRAWINGS, PROVIDE REINFORCEMENT IN ACCORDANCE WITH APPLICABLE TYPICAL DETAILS OR SIMILAR TO THAT SHOWN FOR MOST NEARLY SIMILAR SITUATIONS, AS DETERMINED BY THE DIRECTORS REPRESENTATIVE. IN NO CASE SHALL REINFORCEMENT BE LESS THAN MINIMUM PERMITTED BY THE APPLICABLE CODES.
4. BOTTOM OF EXTERIOR FOOTINGS ARE 4'-6" MINIMUM BELOW FINISHED GRADE.
5. WHEN TEMPERATURE CONDITIONS REQUIRE IT, ADMIXTURES FOR ACCELERATING AND RETARDING SETTING UP AND CURING OF CONCRETE SHALL BE PLACED AS SPECIFIED IN ACI306R, "STANDARD PRACTICE FOR COLD WEATHER CONCRETING", AND ACI305R "HOT WEATHER CONCRETE".

STEEL NOTES

1. ALL STRUCTURAL STEEL TO BE A572 GRADE 50 KSI STEEL EXCEPT TUBES TO BE Fy = 46 KSI; UNDER ASTM A500 GRADE B AND PIPE TO BE A53 TYPE E OR S, GRADE B.
2. DO NOT PLACE HOLES THROUGH STRUCTURAL STEEL MEMBERS, EXCEPT AS SHOWN AND DETAILED ON STRUCTURAL DRAWINGS.
3. ALL STRUCTURAL STEEL, INCLUDING HIGH STRENGTH BOLTS, SHALL COMPLY WITH DOMESTIC STEEL PROVISIONS OF ARTICLE 25.4 OF THE GENERAL CONDITIONS.
4. ALL SHOP DRAWINGS SHALL BE CHECKED BY THE DETAILER BEFORE SUBMISSION. FAILURE TO SUBMIT CHECKED SHOP DRAWINGS WILL BE CAUSE FOR THEIR DISAPPROVAL WITHOUT REVIEW. CONNECTION CHANGES INITIATED BY THE DETAILER OR FABRICATOR TO PREVIOUSLY REVIEWED SHOP DRAWINGS SHALL BE RESUBMITTED FOR REVIEW.
5. ALL STEEL ELEVATIONS ARE BASED ON AN ASSUMED 1st FLOOR ELEVATION OF 0'-0".
6. METAL ROOF DECK PROPERTIES

UNIT DEPTH	= 1½"
GAUGE	= 20
FLUTE SPACING	= 8"
MOMENT OF INERTIA	= 0.22 in⁴
SECTION MODULUS (POS.)	= 0.25 in³
SECTION MODULUS (NEG.)	= 0.26 in³
FINISH	= GALVANIZED

7. METAL DECK SECTION MODULUS AND MOMENT OF INERTIA PROPERTIES ARE APPROXIMATE; VALUES WITHIN 5 PERCENT OF THOSE SHOWN ARE CONSIDERED ACCEPTABLE.
8. ALL STEEL TO BE HOT DIP GALVANIZED.

STEEL NOTES (CONT.)

9. FRAME ALL SIDES OF ALL STEEL ROOF DECK OPENINGS. FRAME OPENINGS IN DECK SPANNING 4'-0" AND LESS WITH 4x4x5/16" STEEL ANGLES. FRAME OPENINGS IN DECK SPANNING GREATER THAN 4'-0" WITH C8x11.5 STEEL CHANNELS, UNLESS NOTED OTHERWISE. SEE TYP. SECT. 1/S-501.
10. ANCHOR BOLTS, BASE PLATES AND BEARING PLATES SHALL BE LOCATED AND BUILT INTO CONNECTING WORK, PRE-SET BY TEMPLATES OR SIMILAR METHODS. ALL PLATES SHALL BE SET IN FULL BED OF NON-SHRINK GROUT. ALL POCKETS FOR COLUMNS, BEAMS AND BAR JOIST MUST BE COMPLETELY FILLED BEFORE A SLAB IS PLACED ABOVE.
11. TOUCH-UP PAINT STEEL SURFACES DAMAGED FROM SHIPPING OR ERECTION.
12. BOLTS FOR STRUCTURAL FRAMING CONNECTIONS ARE ½"ø ASTM A325 BOLTS, UNLESS OTHERWISE NOTED.

DESIGN LOADS

1. LIVE LOADS
   ROOF: UNIFORM SNOW LOAD —— 34 PSF
   (DRIFTED SNOW AS PER ASCE 7-05)
   CONSTRUCTION: —— 20 PSF
   WIND LOAD:
   ZONE 1: +10/-16
   ZONE 2: +10/-29
   ZONE 3: +10/-42
2. DEAD LOADS:
   - CANOPY ROOF
   1½" STEEL DECK: —— 2 PSF
   STRUCTURAL STEEL: —— 6 PSF
   MISC. MECHANICAL: —— 5 PSF
   ROOF SYSTEM: —— 5 PSF
   18 PSF

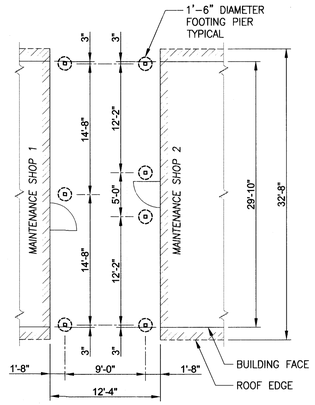

FOUNDATION PLAN

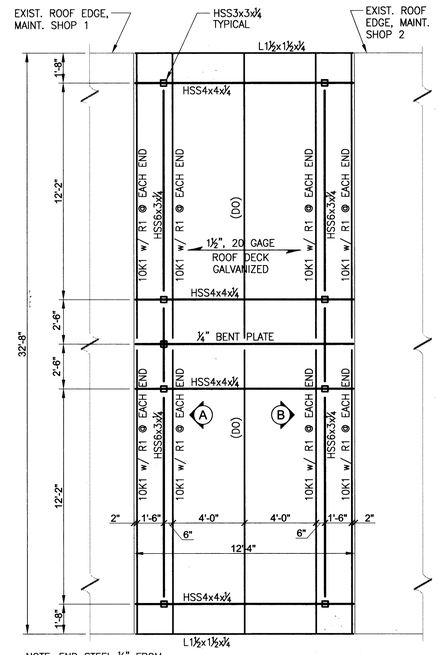

NOTE: END STEEL ½" FROM FACE OF EXISTING BUILDINGS

ROOF FRAMING PLAN

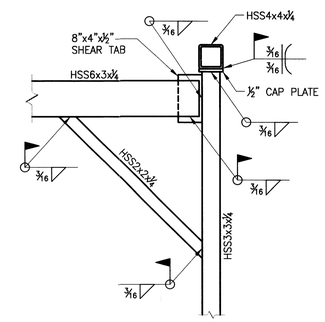

DETAIL 1

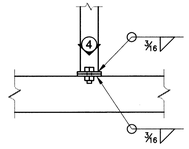

DETAIL 3

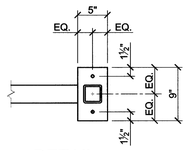

DETAIL 4

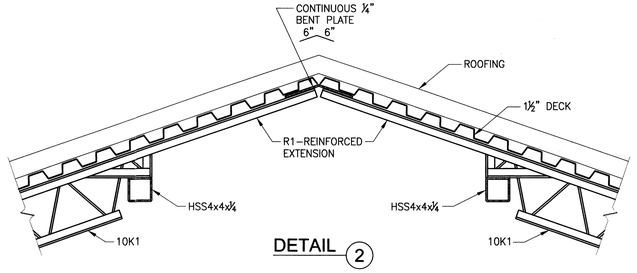

DETAIL 2

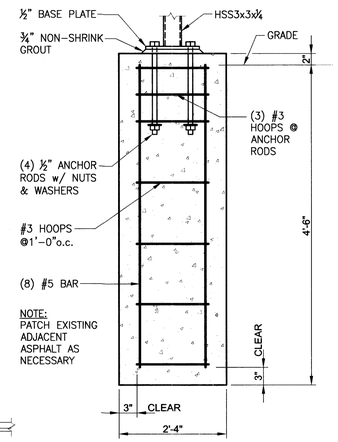

COLUMN FOOTING DETAIL

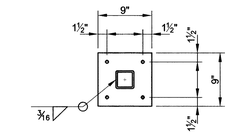

BASE PLATE DETAIL

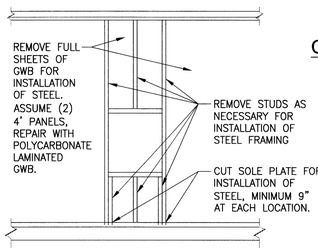

REMOVAL - ELEVATION

NOTE: PROVIDE AT WINDOWS 11,12,13 & 14. REFER TO DRAWING A-103.

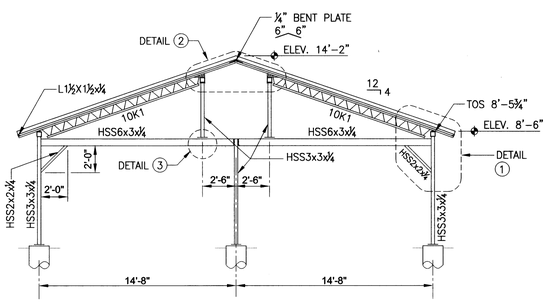

ELEVATION A

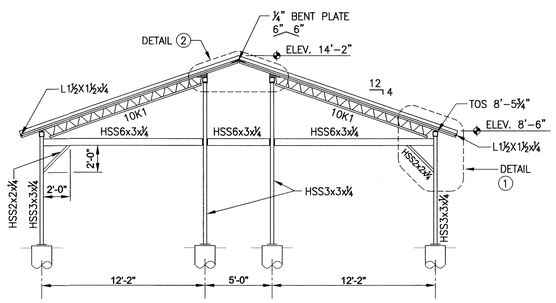

ELEVATION B

REFERENCE DRAWING

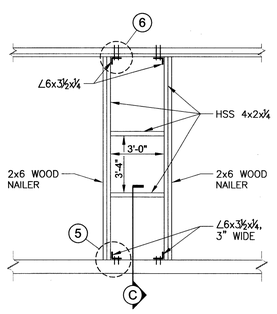

WINDOW SUPPORT ELEVATION

NOTE: PROVIDE AT WINDOWS 11,12,13 & 14. REFER TO DRAWING A-103.

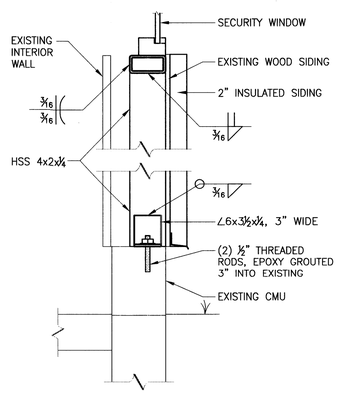

SECTION C

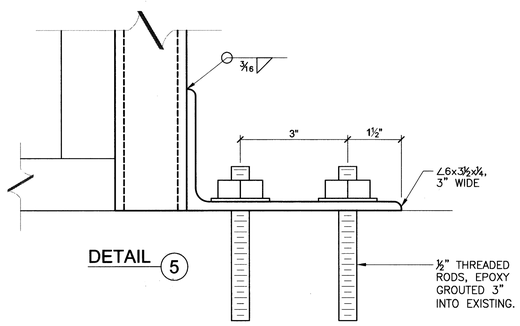

DETAIL 5

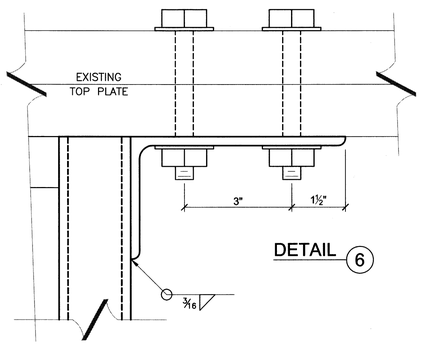

DETAIL 6

NYS OFFICE OF GENERAL SERVICES
Serving New York
ANDREW M. CUOMO, Governor
ROANN M. DESTITO, Commissioner

CONSULTANT

FINAL SUBMISSION

WARNING:
THE ALTERATION OF THIS MATERIAL IN ANY WAY, UNLESS DONE UNDER THE DIRECTION OF A COMPARABLE PROFESSIONAL, I.E. ARCHITECT FOR AN ARCHITECT, ENGINEER FOR AN ENGINEER OR LANDSCAPE ARCHITECT FOR A LANDSCAPE ARCHITECT, IS A VIOLATION OF THE NEW YORK STATE EDUCATION LAW AND/OR REGULATIONS AND IS A CLASS "A" MISDEMEANOR.

LICENSED PROFESSIONAL ENGINEER CHARLES JOSEPH FEDDER 084093 STATE OF NEW YORK

CONTRACT: CONSTRUCTION

TITLE: REPLACE ROOFS, SIDING, DOORS AND WINDOWS

LOCATION: BROOKWOOD SECURE CENTER, PO BOX 419, CR 29, CLAVERACK, NY 12513

CLIENT: NYS OFFICE OF CHILDREN AND FAMILY SERVICES

MARK	DATE	DESCRIPTION
	05/29/2015	FINAL SUBMISSION

PROJECT NUMBER:	44980 – C
DESIGNED BY:	CJF
DRAWN BY:	JJN
FIELD CHECK:	DM
APPROVED:	

SHEET TITLE: PLAN, SECTIONS, DETAILS, NOTES

DRAWING NUMBER: S-101

SHEET OF

May 28,2015 – 8:57am
V:\Designed\Constr\(P449xx\44980\CadStru\44980-S101.dwg
36x24 PLOT SHEET