DESIGN AND CONSTRUCTION GROUP
THE GOVERNOR NELSON A. ROCKEFELLER
EMPIRE STATE PLAZA
ALBANY, NY 12242

ADDENDUM NO. 1 TO PROJECT NOS. 45124-C,H,P,E

**CONSTRUCTION WORK, HVAC WORK, PLUMBING WORK, AND ELECTRICAL WORK
ABATE HAZARDOUS MATERIALS
AND RENOVATE BUILDING NO. 4
STATE OFFICE BUILDING CAMPUS
1220 WASHINGTON AVENUE
ALBANY, NY**

September 22, 2016

NOTE: This Addendum forms a part of the Contract Documents. Insert it in the Project Manual. Acknowledge receipt of this Addendum in the space provided on the Bid Form.

CONSTRUCTION WORK SPECIFICATIONS

1. Page 055000-6, ARTICLE 2.08 FABRICATED ITEMS (MT-1, MT-2, MT-3, MT-4): Add the following Paragraph:
   "E. (MT-5) 16ga steel sheet shop fabricated to sizes indicated. Shop prime and finish as specified under Section 099101."

2. Page 081116-1, ARTICLE 2.01 MANUFACTURERS: Add the following Paragraph:
   "B. Basis of Design:
      1. Interior Storefront Systems: Kawneer 2250 IG.
      2. Sliding Fronts: Kawneer 1010 Sliding Mall Front."

3. SECTION 087100 FINISH HARDWARE: Discard the Section bound in the Project Manual and substitute the accompanying Section (pages 087100-1 thru 087100-19) noted "REVISED 9/22/16".

4. SECTION 093013 CERAMIC TILE: Discard the Section bound in the Project Manual and substitute the attached Section (pages 093113-1 thru 093113-9) noted "REVISED 9/22/16".

5. Page 124813-1, Paragraph 1.01 B.: Delete this Paragraph in its entirety and replace with the following:

   "B. Related WorkRequirements:
      1. Concrete: Section 033000."

6. SECTION 142000 ELEVATORS: Add the accompanying Prefunctional Checklist (pages 142000.1-1 thru 142000.1-5), and Functional Test Procedures (pages 142000.2-1 thru 142000.2-6) to the end of this Section.

HVAC WORK SPECIFICATIONS

7. SECTION 230923 DIRECT DIGITAL BUILDING CONTROL SYSTEM: Add the accompanying Prefunctional Checklist (pages 230923.1-1 thru 230923.1-2), and Functional Test Procedures (pages 230923.2-1 thru 230923.2-2) to the end of this Section.

8. Page 230923-38, Paragraph 3.04 C.: Delete this Paragraph in its entirety and replace with the following:
   "C. Control wiring shall be installed in it's own separate conduit raceways. Magnetic starters and disconnect switches shall not be used as junction boxes. Provide all control equipment and wiring as necessary for the Work and coordinate with the Director's Representative's and Electrical Work Contractor prior to rough-in."

9. Page 230923-38, Paragraph 3.04 E.: Delete this Paragraph in its entirety.

10. SECTION 230993 SEQUENCE OF OPERATIONS: Discard the Section bound in the Project Manual and substitute the accompanying Section (pages 230993-1 thru 230993-23) noted "REVISED 9/26/16".

11. SECTION 232123 PUMPS: Add the accompanying Prefunctional Checklist (pages 232123.1-1 thru 232123.1-6), and Functional Test Procedures (pages 232123.2-1 thru 232123.2-7) to the end of this Section.

12. SECTION 233415 CENTRIFUGAL IN-LINE FANS: Add the accompanying Prefunctional Checklist (pages 233415.1-1 thru 233415.1-3), and Functional Test Procedures (pages 233415.2-1 thru 233415.2-4) to the end of this Section.

13. SECTION 233600 AIR TERMINAL UNITS: Add the accompanying Prefunctional Checklist (pages 233600.1-1 thru 233600.1-16), and Functional Test Procedures (pages 233600.2-1 thru 233600.2-7) to the end of this Section.

14. SECTION 235415 ELECTRIC HEATERS CABINET TYPE: Add the accompanying Prefuntional Checklist (pages 235415.1-1 thru 235415.1-3), and Functional Test Procedures (pages 235415.2-1 thru 235415.2-3) to the end of this Section.

15. SECTION 235700 HEAT EXCHANGERS: Add the accompanying Prefunctional Checklist (pages 235700.1-1 thru 235700.1-4), and Functional Test Procedures (pages 235700.2-1 thru 235700.2-4) to the end of this Section.

16. SECTION 236424 AIR COOLED MODULAR CHILLERS:
    a. Page 236424-2, ARTICLE 2.01 ACCEPTABLE MANUFACTURERS: Delete this Article in its entirety and replace with the following:

       "**2.01 ACCEPTABLE MANUFACTURERS**

       A. Basis-of-Design Product: ArctiChill, (2) PACVMV0600D4-MM & (3) FC-160. Subject to compliance with requirements, provide product

indicated on Drawings or comparable product by one of the following manufacturers:

B. ArctiChill, www.arcticchillergroup.com
Representative: MWSK Equipment, 212-643-7700

C. Technical Systems, www.rae-corp.com

D. Tandem Chillers Inc., www.tandemchillers.com

b. Add the accompanying Prefunctional Checklist (pages 236424.1-1 thru 236424.1-4), and Functional Test Procedures (pages 236424.2-1 thru 236424.2-3) to the end of this Section.

17. SECTION 237313 AIR HANDLING UNITS:
   a. Page 237313-2, Paragraph 2.01 E.: Delete the words "chilled water and" from the first line.
   b. Add the accompanying Prefunctional Checklist (pages 237313.1-1 thru 237313.1-8), and Functional Test Procedures (pages 237313.2-1 thru 237313.2-11) to the end of this Section.

18. SECTION 237413 AIR CONDITIONERS-PACKAGED OUTDOOR TYPE:
   a. Change "AIR CONDITIONERS-PACKAGED OUTDOOR TYPE" Section Title to read "AIR CONDITIONERS".
   b. Page 237413-4, ARTICLE 2.01 AIR CONDITIONERS (SERVING ELEVATOR MACHINE ROOMS) (ACU-1): Add the following Paragraph:
   "K. 14 inch Roof Curb."
   b. Add the accompanying Prefunctional Checklist (pages 237413.1-1 thru 237413.1-6), and Functional Test Procedures (pages 237413.2-1 thru 237413.2-4) to the end of this Section.

19. SECTION 238113 AIR CONDITIONERS-DATA AND ELECTRICAL CLOSETS :
   a. Page 238113-2, ARTICLE 2.01 PRODUCTS: Delete this Article in its entirety and replace with the following:

"2.01 PRODUCTS

A. Basis of Design: Stulz-ATS model OHS ceiling mounted, self-contained air conditioner, with remote air cooled glycol cooler model FFS.

B. Manufacturers: Subject to compliance with requirements, provide comparable product indicated above and on the drawings by one of the following:
   1. CompuAire.
   2. Liebert.
   3. Stulz."

   b. Add the accompanying Prefunctional Checklist (pages 238113.1-1 thru 238113.1-9), and Functional Test Procedures (pages 238113.2-1 thru 238113.2-5) to the end of this Section.

20. SECTION 238126 SPLIT–SYSTEM AIR CONDITIONERS: Add the accompanying Prefunctional Checklist (pages 238126.1-1 thru 238126.1-14), and Functional Test Procedures (pages 238126.2-1 thru 238126.2-11) to the end of this Section.

21. SECTION 238219 FAN COIL UNITS:
    a. Page 238126-1, ARTICLE 1.01 GENERAL REQUIREMENTS: Add the following Paragraphs:
       "D. General Commissioning Requirements: Section 019113.
       E. Commissioning Process: Section AGCP in Appendix."
    b. Add the accompanying Prefunctional Checklist (pages 238219.1-1 thru 238219.1-4), and Functional Test Procedures (pages 238219.2-1 thru 238219.2-2) to the end of this Section.

22. SECTION 238220 CHILLED BEAM UNITS: Add the accompanying Prefunctional Checklist (pages 238220.1-1 thru 238220.1-12), and Functional Test Procedures (pages 238220.2-1 thru 238220.2-8) to the end of this Section.

23. SECTION 238236 FINNED TUBE RADIATION: Add the accompanying Prefunctional Checklist (pages 238236.1-1 thru 238236.1-2), and Functional Test Procedures (pages 238236.2-1 thru 238236.2-2) to the end of this Section.

24. SECTION 238239 UNIT HEATERS: Add the accompanying Prefunctional Checklist (pages 238239.1-1 thru 238239.1-9), and Functional Test Procedures (pages 238239.2-1 thru 238239.2-8) to the end of this Section.

PLUMBING WORK SPECIFICATIONS

25. SECTION 213000 FIRE PUMP SYSTEM: Add the accompanying Prefunctional Checklist (pages 213000.1-1 thru 213000.1-3), and Functional Test Procedures (pages 213000.2-1 thru 213000.2-2) to the end of this Section.

26. SECTION 221123 PUMPS: Add the accompanying Prefunctional Checklist (pages 221123.1-1 thru 221123.1-3), and Functional Test Procedures (pages 221123.2-1 thru 221123.2-2) to the end of this Section.

ELECTRICAL WORK SPECIFICATIONS

27. SECTION 033001 CAST-IN-PLACE CONCRETE: Add the accompanying Section (pages 033001-1 thru 033001-4) to the Project Manual.

28. SECTION 260923 DISTRIBUTED DIGITAL LIGHTING CONTROL SYSTEM: Discard the Section bound in the Project Manual and substitute the accompanying Section (pages 260923-1 thru 260923-11) noted "REVISED 9/22/16".

29. SECTION 260925 OCCUPANCY SENSORS FOR LIGHTING CONTROLS: Add the accompanying Prefuntional Checklist (pages 260925.1-1 thru 260925.1-2), and Functional Test Procedures (pages 260925.2-1 thru 260925.2-2) to the end of this Section.

31. SECTION 260943 NETWORK LIGHTING CONTROLS: Add the accompanying Prefunctional Checklist (pages 260943.1-1 thru 260943.1-4), and Functional Test Procedures (pages 260943.2-1 thru 260943.2-4) to the end of this Section.

32. SECTION 265110 LIGHTING FIXTURES: Discard the Section bound in the Project Manual and substitute the accompanying Section (pages 265110-1 thru 265110-7) noted "REVISED 9/22/16".

33. Page 262729-1, Paragraph 1.03 A.: Change “078413” to read “078400”.

34. Page 271524-1, ARTICLE 1.01 DEFINITIONS: Change “014200” to read “014216” in the Note.

COMMON G DRAWINGS

35. Drawing No. G-001A, LIST OF DRAWINGS: Add the following Reference Drawings: 60-2003, 62-2013, and 76-354.

36. Drawing No. G-002A, LIST OF DRAWINGS: Add the following Electrical Work Drawing: E-343 FIRE ALARM PENTHOUSE PLAN C

CONSTRUCTION WORK DRAWINGS

37. Drawing No. A-104, PLAN 2: Change the Note, “1 inch Deep Galv Stl Grating with 60% Free Area” to read “1 inch Deep Galv Stl Grating with 70% Free Area”.

38. Drawing No. A-112, FIRST FLOOR CONSTRUCTION PLAN B:
    a. Add note “3-SIDED 37 ¼” HIGH PIPE ENCLOSURE (MT-5) W/ REMOVABLE TOP” referring to rectangles shown in plan along column line A between column lines 14 and 15.
    b. Lobby 100: Change 30 feet of partition from type 1A3 to 1A6. Increase stud size to accommodate Mechanical piping for perimeter heating.

39. Drawing No. A-122, SECOND FLOOR CONSTRUCTION PLAN B:
    a. Add elevation tag 6/A-514 for interior storefront along column line 11 between column lines C and D. Make storefront continuous between column lines C and D with no interruptions at the column enclosures.
    b. Add 2-foot long partition type A6 near column 11/C.

40. Drawing No. A-132, THIRD FLOOR CONSTRUCTION PLAN B:
    a. Delete glass door 318A at column line 11/C. Shift door locations in Break Room 318 and add door tags 318 and 318B to these doors.
    b. Add elevation tag 6/A-514 for interior storefront along column line 11 between column lines C and D and add (4) vertical mullions.
    c. Add 2-foot long partition type A6 near column 11/C.

41. Drawing No. A-141,
    a. Change the Note, “1 inch Deep Galv Stl Grating with 60% Free Area” to read “1 inch Deep Galv Stl Grating with 70% Free Area”.
    b. Increase plenum floor opening size by approximately 15 sq. ft. along column line B between column line 10 and 11.

42. Drawing No. A 329, TYPICAL VESTIBULE PLANS, SECTIONS, ELEVATIONS, AND DETAILS:
    a. DETAIL 1: Add note “3-SIDED 37 ¼” HIGH PIPE ENCLOSURE (MT-5) W/ REMOVABLE TOP” referring to rectangles shown in plan along column lines B1 and C. Add dimensions 2’-6” x 8” to rectangular pipe enclosures shown in plan along column lines B1 and C.

b. DETAIL 5: Add stainless steel bollard door opener to elevation which is already shown in plan on dwgs. A-111 and A-113.

c. Detail 5: Add detail keys 1/A-324 at curtain wall system CW-2 and detail key 3/A-325 at entrance door side lite.

43. Drawing No. A-403: ELEVATION 4: Adjust HVAC supply diffuser and linear return grille locations as shown on Revised HVAC Drawings issued with Addendum No. 1.

44. Drawing No. A-513, DETAIL 3:

a. Change the Note, "3-SIDED REMOVABLE 16 GA PTD SHEET STEEL ENCLOSURE. HEIGHT TO MATCH ADJACENT RADIATOR ENCLOSURE" to read 3-SIDED 37 ¼" HIGH PIPE ENCLOSURE (MT-5) W/ REMOVABLE TOP". The note refers to rectangular pipe enclosure shown parallel to partition. Revise dimension of rectangular pipe enclosures to 2'-6" x 8".

b. Add (2) layers of 5/8" gypsum board to end of partition where it meets curtain wall mullion.

45. Drawing No. A-601, DOOR SCHEDULE:

a. DOOR SCHEDULE FIRST FLOOR:

1) Demountable Doors 103, 105, 107and 109:

a) Door Material: Change "HM" to read "Glass".

b) Jamb Detail: Change "9/A-504" to read "8/A-504".

c) Head Detail: Change "3/A-504" to read "2/A-504".

b. DOOR SCHEDULE SECOND FLOOR:

1) Demountable Doors 201A and 201B:

a) Door Material: Change "HM" to read "Wood".

46. Drawing Nos. FF-101, FF-102, and FF-103, GENERAL NOTE: Delete this Note in its entirety and replace with the following:
"FURNITURE FURNISHED BY THE STATE, AND INSTALLED BY THE CONSTRUCTION WORK CONTRACTOR. THE CONSTRUCTION WORK CONTRACTOR SHALL OFF LOAD FURNITURE FROM TRAILERS LOCATED AT THE BUILDING LOADING DOCK AND MOVE TO APPROPRIATE FLOOR AS REQUIRED

47. Drawing No. S-102, NOTES:

a. Note 5: Delete this Note in its entirety and replace with the following:

"5. SEE PLUMBING DRAWINGS P-112, P-113 AND P-503 FOR SANITARY PIPES PLACED WITHIN CONCRETE TOPPING. THE PLUMBING CONTRACTOR (NOT PART OF THIS CONTRACT) TO PROVIDE THE DIRECTOR'S REPRESENTATIVE AND PLUMBING ENGINEER OF RECORD WITH DETAILED SKETCH OF EXISTING VERTICAL AND PROPOSED HORIZONTAL PIPES NEAR COLUMNS. THE PLUMBING CONTRACTOR (NOT PART OF THIS CONTRACT) TO SURVEY EXISTING REBARS NEAR PIPE CONNECTIONS TO EXISTING VERTICAL PIPES. THE PLUMBING CONTRACTOR (NOT PART OF THIS CONTRACT) SHALL SCAN REBARS WITH GROUND PENETRATING RADAR AND PROVIDE THE DIRECTOR"S REPRESENTATIVE WITH FIELD SKETCH OF REBAR LOCATIONS ALONG THE PROPOSED PIPE RUNS.ALL CONCRETE FIELD WORK AROUND INSTALLATION OF THE PROPOSED PIPES, SUCH AS CUTTING OF CONCRETE MAT AROUND REBARS, WHERE PIPES PENETRATE CONCRETE MAT, AND CONCRETE PATCHING SHALL BE PART OF THIS CONTRACT. CONTRACTOR TO PROVIDE THE DIRECTOR'S REPRESENTATIVE WITH SKETCH OF PROPOSED CONCRETE REMOVALS PRIOR TO ANY FIELD WORK.EXISTING CONCRETE OR REBARS AT

COLUMNS SHALL NOT BE REMOVED WITHOUT DIRECTOR'S REPRESENTATIVE'S APPROVAL".

b. Add the following Note:
"14. See referenced Details on Drawing No. S-600 for locations and dimensions for the exterior concrete pads."

48. Drawing No. S-404, SCREENWALL PLAN PART 1:
a. Rotate concrete pad located near column line D/10 90 degrees.
b. Change "10'-0" x 5'-0" pad dimension to read "5'-0" x 9'-8".

49. Drawing No. S-407, PENTHOUSE PLENUM: Increase plenum floor opening size by approximately 15 sq. ft. along column line B between column line 10 and 11.

50. Drawing No. S-504, SECTIONS AND DETAILS:
a. Detail 1: Add shims at edge of slab.
b. Detail 4: Add shims at edge of slab.
c. Detail 5: Add shims at edge of slab.

51. Drawing S-600, DETAIL 6:
a. Delete 24'x6' dimensions. Add 2'-6" dimension for depth of concrete pad and added chamfered edges.
b. Change the Note, "FOR LOCATION OF GENERATOR PAD SEE CIVIL AND ARCHITECTURE DRAWINGS" to read "FOR LOCATION OF GENERATOR PAD AND ACC-S UNIT PAD SEE ELECTRICAL AND HVAC DRAWINGS".

52. Revised Drawings:
a. Drawing Nos. A-012, A-512, and A-514 noted "REVISED DRAWING 9/15/16" accompany this Addendum and supersede the same numbered originally issued drawings.

HVAC WORK DRAWINGS

53. Drawing No. M-111, HVAC FIRST FLOOR DUCTWORK PLAN A: At Column Line 6A/C, add the following return inlet size to the Plan: "50 x 14 RA, 5000 cfm".

54. Drawing No. M-113, HVAC FIRST FLOOR DUCTWORK PLAN C: At Column Line 15/C, add the following return inlet size to the Plan: "60 x 12 RA".

55. Drawing No. M-121, HVAC SECOND FLOOR DUCTWORK PLAN A:
a. At Column Line 6/Ca, add the following return inlet size to the Plan: "50 x 14 RA, 5000 cfm".
b. At Column Line 6/Cb, add CD-1 diffuser to Room 207.

56. Drawing No. M-122, HVAC SECOND FLOOR DUCTWORK PLAN B:
a. At Column Line 12-14/C-D, add the following Note for all exhaust grilles at toilet: "EAG-1, 150 cfm".
b. At Column Line 12/Ca, add the following return inlet size to the Plan: "50 x14 RA, 5000 cfm".

57. Drawing No. M-123, HVAC SECOND FLOOR DUCTWORK PLAN C:
    a. At Column Line 15/C, add the following return inlet size to the Plan: "60 x 12 RA, 5000 cfm".

58. Drawing No. M-131, HVAC THIRD FLOOR DUCTWORK PLAN A:
    a. At Column Line 6/Ca, add the following return inlet size to the Plan: "50 x 14 RA, 5000 cfm".

59. Drawing No. M-132, HVAC THIRD FLOOR DUCTWORK PLAN B:
    a. At Column Line 6/C, add the following Note to the Riser: "6 x 12 EA from below to GEF-1".
    b. At Column Line 12/Ca, add the following return inlet size to the Plan: "50 x 14 RA, 5000 cfm".
    c. At Column Line 12-13/Cb, add the following Note to the Riser: "12 x 16 EA from below to TEF-2".
    d. At Column Line 14/C, add the following ductwork size to the Plan: "8 x 8 EA".

60. Drawing No. M-141, HVAC PENTHOUSE DUCTWORK PLAN :
    a. At Column Line 6/C, add the following Note to the Riser: "10 x 10 EA from below to GEF-1".
    b. At Column Line 9/Ca, add temperature sensor to 18 x 16 SA duct.

61. Drawing No. M-142, HVAC ROOF PLAN A:
    a. At Column Line 6/C, add riser for chilled water from air cooled chiller with the following Note: "6 inch dia. PGS & 6 inch dia. PGR DN/UP from level below. Refer to Dwg. No. M-235 for continuation".
    b. At Column Line 4/B, Delete the Note which reads "6 inch dia. PGS & 6 inch dia. PGR DN/UP from level below. Refer to Dwg. No. M-235 for continuation".
    c. At Column Line 6 (bottom of page): Add "M-241" as a second page reference at match line.

62. Drawing No. M-143, HVAC ROOF PLAN B: At Column Line 10/Ca, add temperature sensor to elevator machine room.

63. Drawing No. M-144, HVAC ROOF PLAN C: At Column Line 15/C, add motorized dampers to supply and return ductwork of AHU-5.

64. Drawing No. M-211, HVAC FIRST FLOOR HW PIPING PLAN A: For the FTR piping at building perimeter, Change the five "(HWR)" designations to read "HOT WATER SUPPLY (HWS)".

65. Drawing No. M-213, HVAC FIRST FLOOR HW PIPING PLAN C: For the FTR piping at building perimeter, Change the four "(HWR)" designations to read "HOT WATER SUPPLY (HWS)".

66. Drawing No. M-215, HVAC FIRST FLOOR CHW & REFRIGERANT PIPING PLAN B: Relocate AC S-2 and BSB S-2 from Storage Room 125 to CBVH Store.

67. Drawing No. M-221, HVAC SECOND FLOOR HW PIPING PLAN A:
    a. For the FTR piping at building perimeter, Change the seven "(HWR)" designations to read "HOT WATER SUPPLY (HWS)".
    b. For the FTR piping at building perimeter, Add three expansion loops the HWR, and delete three expansion loops from the HWS.

68. Drawing No. M-223, HVAC FIRST FLOOR HW PIPING PLAN C: For the FTR piping at building perimeter, Change the eight "(HWR)" designations to read "HOT WATER SUPPLY (HWS)".

69. Drawing No. M-231, HVAC SECOND FLOOR HW PIPING PLAN A:
    a. For the FTR piping at building perimeter, Change the eight "(HWR)" designations to read "HOT WATER SUPPLY (HWS)".
    b. For the FTR piping at building perimeter, Add three expansion loops the HWR, and delete three expansion loops from the HWS.

70. Drawing No. M-241, HVAC PENTHOUSE HW & CHW PIPING PLAN: At Column Line 6/C, Add riser for chilled water from air cooled chiller.

71. Drawing No. M-301, AHU-1 Section 1: At Column Line 8, Change the Note, "4 inch concrete pad by Structure" to read "4 inch concrete pad".

72. Drawing No. M-302, AHU-2 SECTIONS 1, 2, and 3: Change the Note, "4 inch concrete pad by Structure" to read "4 inch concrete pad".

73. Drawing No. M-303, AHU-3 SECTIONS 1, 2, and 3: Change the Note, "4 inch concrete pad by Structure" to read "4 inch concrete pad".

74. Drawing No. M-604, 1ST FLOOR PLAN FLOW DIAGRAM: Add FCU-1 and FCU-2 to diagram.

75. Drawing No. M-802, AIR INLETS/OUTLETS SCHEDULE, LD-3:
    a. Nominal Diffuser Width: Change "6-9/16" to read "8".
    b. Min-Max (CFM): Change "40 cfm/ft" to read " 200 cfm/ft".
    c. Max NC : Change "<20" to read "<23".
    d. Material: Change "Steel" to read "Aluminum".
    e. Remarks: Add "15 degree Deflection".

76. Revised Drawings:
    a. Drawing Nos. M-002, M-112, M-133, M-212, M-222, M-232, M-233, M-401, M-502, M-511, M-602, M-609, M-703, M-707, M-801, M-803, and M-804 noted "REVISED DRAWING 9/15/16" accompany this Addendum and supersede the same numbered originally issued drawings.

PLUMBING WORK DRAWINGS

77. Drawing No. P-503, DETAIL 5: Add the following Note to this Detail:
"Plumbing Contractor shall be responsible for the rebar scanning with ground penetration radar for the installation of sanitary pipes installed within concrete topping. Provide the Director's Representative with detailed sketch of existing vertical and proposed horizontal pipes near columns. Also provide field sketch of bar locations to the Director's Representative. Coordinate with the Construction Work contractor on rebar and concrete work required. Coordinate with the Director's Representative on all field investigations."

78. Drawing Nos. F-112, F-132, and F-142: Add the following Note:
"Plumbing Work Contractor shall include fire sprinklers for all elevator shafts at the top of shaft and bottom of pit."

ELECTRICAL WORK DRAWINGS

79. Revised Drawings:
    a. Drawing Nos. E-001, E-111, E-112, E-113, E-121, E-122, E-123, E-131, E-132, E-133, E-212, E-222, E-312, E-322, E-601, E-602, E-604, and E-702 noted "REVISED DRAWING 9/15/16" accompany this Addendum and supersede the same numbered originally issued drawings.

END OF ADDENDUM

Margaret F. Larkin
Executive Director
Design and Construction

JRC:jc

SECTION 033001

CAST-IN-PLACE CONCRETE

PART 1 GENERAL

1.01 REFERENCES

A. Except as shown or specified otherwise, the Work of this Section shall conform to the requirements of Specifications for Structural Concrete for Buildings ACI 301-05 of the American Concrete Institute.

1.02 DEFINITIONS (Amendments to ACI 301, Section 1.2):

A. Exposed Construction: Exposed to view.

1.03 SUBMITTALS

A. Submittals Package: Submit product data for design mix(es) and materials for concrete specified below at the same time as a package.

B. Shop Drawings: Placing drawings for bar reinforcement.

C. Product Data:
1. Concrete design mix(es) with name and location of batching plant.
2. Portland Cement: Brand and manufacturer's name.
3. Fly Ash: Name and location of source, and DOT test numbers.
4. Air-entraining Admixture: Brand and manufacturer's name.
5. Water-reducing Admixture: Brand and manufacturer's name.
6. Aggregates: Name and location of source, and DOT test numbers.

D. Quality Control Submittals:
1. Certificates: Affidavit required under Quality Assurance Article.

1.04 QUALITY ASSURANCE

A. Concrete batching plant shall be currently approved as a concrete supplier by the New York State Department of Transportation.

B. Fly ash supplier shall be currently approved as a fly ash supplier by the New York State Department of Transportation.

C. Certifications: Affidavit by the bar reinforcement manufacturer certifying that bar material meets the contract requirements.

D. Source Quality Control: The Director reserves the right to inspect and approve the following items, at his own discretion, either with his own forces or with a designated inspection agency:

1. Batching and mixing facilities and equipment.
2. Sources of materials.

1.05 STORAGE

A. Store materials so as to insure the preservation of their quality and fitness for the Work. Materials, even though accepted prior to storage, are subject to inspection and shall meet the requirements of the Contract before their use in the Work.

PART 2 PRODUCTS

2.01 MATERIALS (Amendments to ACI 301, Section 4, for Normal Weight Concrete and Section 7, for Lightweight Concrete):

A. Water-reducing Admixture: ASTM C 494, Type A, and on the New York State Department of Transportation's current "Approved List".

B. Fly Ash: ASTM C 618, including Table 1A (except for footnote A), Class F except that loss on ignition shall not exceed 4.0 percent.

C. Type 1 Expansion Joint Filler: Preformed, resilient, non-extruding cork units; ASTM D 1752, Type II.

D. Chamfer Strips: Wood, metal, PVC or rubber; one inch chamfer.

2.02 PROPORTIONING (Amendments to ACI 301, Sections 4 & 7):

A. Compressive Strength: Minimum 3000 psi.

B. Weight: Normal.

C. Durability: Concrete shall be air-entrained. Design air content shall be 6 percent by volume, with an allowable tolerance of plus or minus 1.5 percent for total air content. Entrained air shall be provided by use of an approved air-entraining admixture. Air-entrained cement shall not be used.

D. Slump:
1. 3000 psi Normal Weight Concrete: Between 2 inches and 4 inches.

E. Admixtures: Do not use admixtures in concrete unless specified or approved in writing by the Director.

F. Selection of Proportions: Concrete proportions shall be established on the basis of previous field experience or laboratory trial batches, unless otherwise approved in writing by the Director. Proportion mix with a minimum cement content of 564 pounds per cubic yard for 3000 psi concrete.

1. Optional Material: Fly ash may be substituted for (Portland) cement in normal weight concrete up to a maximum of 15 percent by weight of the

required minimum (Portland) cement. If fly ash is incorporated in a concrete design mix, make necessary adjustments to the design mix to compensate for the use of fly ash as a partial replacement for (Portland) cement.

a. Adjustments shall include the required increase in air-entraining admixture to provide the specified air content.

b. Lower early strength of the concrete shall be considered in deciding when to remove formwork.

2.03 REINFORCEMENT (Amendments to ACI 301, Section 3):

A. Bar Reinforcement: ASTM A 615, Grade 60, deformed steel bars.

B. Fabric Reinforcement: ASTM A 185, welded wire fabric, fabricated into flat sheets unless otherwise indicated.

C. Bar Supports: Galvanized steel or AISI Type 430 stainless steel, and without plastic tips.

D. Tie Wire: Black annealed wire, 16-1/2 gage or heavier.

2.04 PRODUCTION (Amendments to ACI 301, Section 5):

A. Provide ready-mixed concrete, either central-mixed or truck-mixed.

PART 3 EXECUTION

3.01 EXAMINATION AND PREPARATION

A. Do not use items of aluminum for mixing, chuting, conveying, forming or finishing concrete, except magnesium alloy tools may be used for finishing.

B. Keep excavations free of water. Do not deposit concrete in water.

C. Hardened concrete, reinforcement, forms, and earth which will be in contact with fresh concrete shall be free from frost at the time of concrete placement.

D. Prior to placement of concrete, remove all hardened concrete spillage and foreign materials from the space to be occupied by the concrete.

3.02 PLACING REINFORCEMENT (Amendments to ACI 301, Section 3):

A. At the time concrete is placed, reinforcement shall be free of mud, oil, loose rust, loose mill scale, and other materials or coatings that may adversely affect or reduce the bond.

3.03 PLACING CONCRETE (Amendments to ACI 301, Section 5):

A. Operation of truck mixers and agitators and discharge limitations shall conform to the requirements of ASTM C 94.

B. Do not allow concrete to free fall more than 4 feet.

3.04 FINISHING FORMED SURFACES (Amendments to ACI 301, Section 5.3.3):

A. Finish Schedule: Provide the finishes below:
   1. Rough Form Finish for concrete surfaces not exposed to view.
   2. Smooth Form Finish for concrete surfaces exposed to view.

3.05 CURING AND PROTECTION (Amendments to ACI 301, Section 5.3.6):

A. Maintain concrete surfaces in a moist condition for at least 7 days after placing, except where otherwise indicated. Do not use curing compound.

END OF SECTION

SECTION 087100

FINISH HARDWARE

1.01 RELATED WORK IN OTHER SECTIONS

A. Access Door Hardware: Section 083113 - Access Doors, except cylinders.
B. Locking Hardware: Section 083323 – Rolling Doors
C. Installation of Door Hardware: Section 081116 – Aluminum Doors and Frames
D. Installation of Door Hardware: Section 084413 – Glazed Aluminum Curtain Walls
E. Installation of Door Hardware: Section 102219 – Demountable Partitions
F. Low-Voltage Wiring: see Electrical Work Contract
G. Connection to Security Access Control Systems: see Electrical Work Contract
H. Connection to Building Fire Alarm Systems: see Electrical Work Contract

1.02 REFERENCES

A. NFPA 80 Fire Doors and Windows (2007).
B. NFPA 101 Life Safety Code (2006).
C. Building Code of New York State (2010).
D. ICC/ANSI A117.1-2003 Accessible and Usable Buildings and Facilities.
E. ANSI/BHMA Standard A156.1 Butts and Hinges (2006).
F. ANSI/BHMA Standard A156.4 Door Controls – Closers (2008).
G. ANSI/BHMA Standard A156.6 Architectural Door Trim (2005).
H. ANSI/BHMA Standard A156.7 Template Hinge Dimensions (2009).
I. ANSI/BHMA Standard A156.8 Door Controls – Overhead Stops and Holders (2005).
J. ANSI/BHMA Standard A156.13 Mortise Locks and Latches Series 1000 (2005).
K. ANSI/BHMA Standard A156.16 Auxiliary Hardware (2008).
L. ANSI/BHMA Standard A156.18 Materials and Finishes (2006).
M. ANSI/BHMA Standard A156.22 Door Gasketing Systems (2005).
N. ANSI/BHMA Standard A156.26 Continuous Hinges (2006).
O. DHI - Door and Hardware Institute.
P. NAAM Standard HMMA 800-96- Hollow Metal Manufacturers Association.
Q. NAAM Standard HMMA 831-97 Recommended Hardware Locations for Custom Hollow Metal Doors and Frames.
R. 2010 Standards for State and Local Government Facilities: Title II.

1.03 DEFINITIONS

A. Architectural Hardware Consultant (AHC): A Door and Hardware Institute certified expert in complex architectural openings requiring advanced knowledge of model building codes and safety standards, ADA requirements, access control knowledge and installation expertise.

B. Architectural Hardware Distributor: A company that regularly purchases architectural hardware from manufacturers and specializes in the sale, service and support of that hardware to contractors and/or end users.

C. Company Field Advisor(s): Hardware manufacturers' representatives who are certified in writing by manufacturer to be technically qualified in design, installation, and servicing of products.

D. Installation Supervisor: Designated supervisor/installer, who has a minimum three years experience in finish hardware installation, and is qualified and responsible to ensure approved finish hardware is installed, adjusted, and operates properly.

E. Benchmark: Finish hardware installed on full size door and frame assembly that is constructed on-site. Benchmarks are constructed to verify qualities of materials and execution; to review coordination between frames, doors, and architectural hardware; to show interface between partitions and frames; and to demonstrate compliance with specified installation tolerances. Benchmarks are not samples. Unless otherwise indicated, approved benchmarks establish the standard by which the Work will be judged. The approved benchmark may be incorporated into the work of this section.

1.04 SUBMITTALS

A. Waiver of Submittals: The Waiver of Certain Submittal Requirements in Section 013300 does not apply to this Section.

B. Re-Evaluation Fee: In accordance with the General Conditions 07213 Article 4.7.

C. Submittal Package Cover Sheets: The Hardware Distributor shall provide a cover sheet, which identifies each package by:
1. OGS project number.
2. Project name.
3. Facility name and location.
4. Submittal Package name.
5. Specification section name and number.
6. Construction Contractor's company name, address, e-mail address, and telephone number.
7. Finish Hardware Distributor's company name, address, e-mail address, and telephone number.
8. Certified Architectural Hardware Consultant's name, company name, address, e-mail address, and telephone number.
9. Submittal Date.

D. Submittal Packages
1. Quality Control Package: Do not submit balance of packages until this package is approved.
   a. Architectural Hardware Consultant Data:
      1) Provide name, business address, and telephone number of DHI certified Architectural Hardware Consultant.
      2) Submit photocopy of Door and Hardware Institute's certificate demonstrating individual is an Architectural Hardware Consultant.

b. Company Field Advisor Data:
   1) Provide name, business address, and telephone number of Company Field Advisor(s) for continuous hinges, door bolts, locksets, overhead stops, door closers, and gaskets.
   2) List services and products for which company field advisor(s) is/are certified by manufacturer. Provide written certifications.

c. Hardware Distributor's Qualification Data:
   1) Provide the Finish Hardware Distributor's company name, address, e-mail address, and telephone number.
   2) Provide the hardware distributor's company history, including number of years in the hardware distribution business, the number of AHC's employed, and the number of employees. Describe the distributor's major market.
   3) Include the names and contact information of physical plant managers for 3 facilities, similar to this project, for which the distributor has furnished architectural hardware within the past 2 years.

d. Supervisor's/Installer's Qualification Data:
   1) Name of Supervisor and each installer performing Work, and employer's name, business address and telephone number.
   2) Names and addresses, and contact information of physical plant managers for 3 facilities, similar to this project, on which each installer has worked on during past 2 years.

2. Finish Hardware Package:

a. Finish Hardware Schedule: Use vertical format and indicate finish hardware items, both mechanical and electrical in one document, required to complete Work of this section. Submit Hardware Schedule that includes complete hardware sets for each door and frame shown on Door Schedule.
   1) Preface schedule with following:
      a) Certified Architectural Hardware Consultant's statement of preparation of/or certification of, Finish Hardware Schedule.
      b) Index.
      c) List of manufacturers.
      d) List of finishes.
      e) Explanation of abbreviations.
      f) Keying instructions and key schedule.
   2) Create hardware groups, each group consisting of similar doors and hardware. Do not combine labeled and non-labeled openings. Do not combine doors and frames with dissimilar door sizes and/or materials.
   3) For each opening include the following:
      a) Door and frame materials and dimensions.
      b) Fire rating.
      c) Door number, location and handing.

d) Degree of opening required for closer and/or overhead stop.
e) Installation and detailing notes.

4) Under each group heading, list hardware items in detail, required for ordering. For each hardware item include:
a) Type (Hinges).
b) Quantity (Hinges 3ea).
c) Manufacturers' name (Hinges 3ea Stanley).
d) Catalog number (Hinges 3ea Stanley FBB199).
e) Size (Hinges 3ea Stanley FBB199 4 ½ x 4 ½).
f) Options or accessories (Hinges HTFBB199 4 ½ x 4 ½).
g) Finish (Hinges HTFBB199 4 ½ x 4 ½ x 630).
h) Fasteners (Hinges HTFBB199 4 ½ x 4 ½ x 630 x torx with center security pin).
i) Indicate location of protection plates: Push side or pull side.
j) Installation Notes, as written in this section, for each hardware group.

5) Use a separate hardware group in Hardware Schedule that lists attic stock hardware items, key cabinets, key control system, special tools required to install hardware, lubricants, and Operations and Maintenance Manuals.

b. Product Data: Furnish six copies of manufacturers' catalog sheets, specifications, sizing charts, and installation instructions, for each item specified. Highlight information pertaining specifically to product (s) submitted.

c. Submit samples as requested.

3. Closeout Submittals Package: Submit as a complete package.

a. Operation and Maintenance Manuals: Furnish 2 hardcover three ring binders with the project name and number displayed on the front cover and spine. Include:
1) List of Manufacturers.
2) Approved Finish Hardware Schedule.
3) Approved Manufacturers' Product Data Sheets.
4) Manufacturer's operation, installation, maintenance, and repair instructions for each type of hardware furnished.
5) Templates for kind of hardware furnished.
6) Parts List for each type of finish hardware furnished.
7) Manufacturers' dated written warranty for each type of finish hardware furnished.
8) Certifications: Written certification from Company Field Advisors that their products are installed according to manufacturers' printed installation instructions, are operating properly, and manufacturers' written warranty will be in effect upon physical completion of the Work.
9) Special Tools: List of special tools required to install hardware, and their purpose.

b. Special Tools:
1) At conclusion of finish hardware installation, turn over to Director's Representative 2 of each special tool

required to install hardware together with a list of these tools and their purpose.

1.05 TEMPLATES

A. After receipt of approved submittals, furnish templates to affected trades, to enable fabricators to make provision for finish hardware without delaying the Work of the Project.

1.06 DELIVERY AND STORAGE

A. Coordinate delivery to avoid delay.

B. Clearly label each item for identification and installation location as it corresponds to the approved Finish Hardware Schedule and subsequent information bulletins.

C. Deliver hardware to the jobsite in the manufacturers' original packages complete with fasteners, parts, installation instructions, and templates required for proper installation.

D. Inventory hardware at jobsite to identify shortages or backorders. Resolve delivery shortages and damaged items prior to installing hardware.

E. Store finish hardware where directed by Director's Representative. Provide locked, dry storage for finish hardware.

1.07 QUALITY ASSURANCE

A. Hardware Distributor's Qualification:
   1. Hardware Distributor who has been in the business of furnishing, and/ or installing finish hardware for a minimum of three years.
   2. Hardware Distributor shall have the DHI certified Architectural Hardware Consultant prepare or certify the Finish Hardware Submittal meets specification requirements, and the schedule is written accurately and in accordance with DHI recommendations, and requirements of this specification.

B. Company Field Advisors: Employ advisor(s) for continuous hinges, door bolts, mortise locksets, surface overhead stops, door closers, and gaskets.

C. Installation Supervisor: Employ a qualified Installation Supervisor who will be responsible to ensure approved finished hardware is installed, adjusted and operates properly.

D. Installers: Employ experienced finish hardware installers who have been regularly employed by a Company installing finish hardware for a minimum of 5 years.

E. Pre-submittal Conference: Before Finish Hardware Submittals are written for submission, the Director's Representative will call a teleconference to review

Finish Hardware Submittal requirements including but not limited to format, cover sheet, headings, hardware sets, level of detail, installation notes, description of operation, keying, and product data sheets. The Contractor, the Finish Hardware Distributor, the Finish Hardware Detailer, and consulting hardware designer, and OGS Designers shall attend. The OGS Finish Hardware Reviewer shall conduct the conference.

F. On Site Pre-installation Conference: Before finish hardware installation begins, the Director's Representative will call a conference at the site to review Finish Hardware Specifications, approved Finish Hardware Submittals, and to discuss requirements for the Work including:
   1. Hardware delivery and storage.
   2. Hardware labeling by door number.
   3. Hardware locations.
   4. Potential location conflicts.
   5. Hardware installation sequence and responsibility.
   6. Required accessories and fasteners.
   7. Continuous hinge installation.
   8. Surface overhead stops and closer template and adjustments.
   9. Special tools and maintenance items.
   10. Hardware Closeout requirements.
   11. Hardware Warranties.

G. Pre-installation Conference Attendance: The Construction Contractor, Company Field Advisors, authorized Finish Hardware Installers, and the Finish Hardware Distributor's Architectural Hardware Consultant shall attend the conference. OGS's Finish Hardware Reviewer conducts the meeting. OGS designers and facility personnel may attend. The Company Field Advisors will present installation instruction and advice.

H. Pre-Benchmark-Construction Meeting: Prior to the construction of the mock-up, a meeting will be held at the site to review the requirements, and discuss the intent of the mock-up. The meeting will be scheduled by the Director's Representative and conducted by the Hardware Designer. The meeting shall be attended by the Director's Representative, the Hardware Designer, the Contractor's onsite foreman, the person supervising this phase of the Work (if different), and the person (people) who will be performing the work.

I. Mockups: Build mockups to verify selections made under Sample submittals and to demonstrate aesthetic effects and set quality standards for materials and execution.
   1. Build mockup of Hardware Groups #3, #29 and #30 containing all components and connections including those to security and fire alarm systems.

   2. Approved mockups may become part of the completed Work if undisturbed at time of Substantial Completion.

J. Construction of Benchmark: Before installing portions of the Work requiring benchmarks, install benchmarks for each form of construction required to

comply with the following requirements, using materials indicated for the completed Work.

1. Build hardware benchmark in door and frame assembly, specified in section 081102, in locations as directed, and include continuous hinge, lockset, closer, surface overhead stop and gaskets.
2. Notify the Director's Representative in advance of dates and times when benchmark will be constructed.
3. Install benchmark with supervisor oversight and workers who will be employed during the construction of the Work.
4. Construct benchmarks using the exact materials, products, methods, and workmanship that were approved for the Work.
5. Obtain Director's Representative's approval of benchmarks before starting work, fabrication, or construction.
6. Maintain benchmarks during construction in an undisturbed condition as a standard for judging the completed Work.
7. Failure to maintain this standard of quality will be cause for rejection of the Work.
8. Benchmark may be used in the Work unless otherwise indicated.

K. Uniformity of Hardware and Single Source Responsibility: For each kind of hardware provide product(s) of a single manufacturer.

L. Size Variations: Manufacturers' products may vary slightly from sizes specified except where minimum size or thickness is specified.

1.08 WARRANTY

A. Manufacturer's Warranty: Ten year minimum warranty for door closers.

B. Manufacturer's Warranty: Three year minimum for locksets.

1.09 MAINTENANCE

A. Special Tools: At the conclusion of finish hardware installation, turn over to Owner's Representative 2 sets of each special tools required for proper installation and adjustment of hardware, together with a list of these tools and their purpose.

B. Lubricants: Provide manufacturer's recommended lubricants for locksets and closers sufficient for 1 year of maintenance. Turn over to Director's Representative.

PART 2 PRODUCTS

2.01 ACCESSORIES

A. Provide brackets, plates, arms, spacers, and special templates to mount door closers in combination with overhead stops and coordinators, on narrow top rails and for special ceiling and jamb conditions.

B. Provide curved lip strikes, with wrought boxes, specific to individual lock functions. Universal strikes that fit a variety of lock functions are not acceptable.

2.02 FASTENINGS

A. Provide fasteners that harmonize with finish hardware material and finish.

B. Provide torx center pin security fasteners for exposed hardware, including full mortise hinges.

C. Provide machine screws for hardware secured to metal; and machine screws and metal expansion shields for attachment to masonry substrates. Self-tapping or self-drilling screws are not acceptable.

D. Provide undercut shallow head torx center pin security fasteners where necessary for proper seating.

E. Attach door closers and overhead stops with sex bolts.

2.03 MATERIALS AND FINISHES

A. General: Requirements for design, grade, function, finish, size, and other distinctive qualities of each type of finish hardware are indicated in this section and in the Hardware Groups.

B. Continuous Hinges
   1. Full height barrel-type manufactured from 14-gauge 304 stainless steel.
   2. .25” diameter stainless steel pins.
   3. Provide hinges without covers.

C. Locks, Latches and Bolts
   1. Comply with UL requirements for throw of bolts and latch bolts on rated fire openings.
   2. Provide 3/4” minimum throw on other latch bolts.
   3. Provide 1” minimum throw deadbolts.

D. Closers and Door Control Devices
   1. Closer bodies: Provide closer bodies with the same hole template pattern regardless of type or application.
   2. Closer arms: Non-handed forged steel.
   3. Closer size: Provide sized closers.
   4. Provide all-weather fluid to eliminate seasonal adjustment of closer speed.
   5. Powder coat closer body, arm, and adapter plate or pre-treat closer body, arm, and adapter plate with rust-inhibiting coating before painted finish is applied.

2.04 FINISH HARDWARE

A. GROUP # 1 EXTERIOR DOORS (100A, 100C)

1. TOP POWER TRANSFER PIVOT: 2 EA – DORMA E80624 x 626
2. EXIT DEVICE: 2EA - VON DUPRIN QEL RX 3547L x 24VDCx626
3. CONCEALED DOOR CLOSER: 2 EA - DORMA BTS80Gx689
4. DOOR PULLS: 2 EA IVES 9264x84”xFlat-Tipx630
5. DOOR POSITION SWITCH: GE 1078D
6. POWER SUPPLY: 1 EA – VON DUPRIN 902-2RSx GRY
7. WEATHERSTRIP AND THRESHOLD BY DOOR SUPPLIER
8. ELEVATION AND POINT TO POINT DRAWINGS

DOORS ARE NORMALLY LOCKED AND CLOSED. DOORS ARE UNLOCKED BY THE ACCESS CONTROL SYSTEM SOFTWARE AND CARD READER. FREE EGRESS AT ALL TIMES.

B. GROUP # 2 VESTIBULE DOORS (100B, 100D)

1. TOP POWER TRANSFER PIVOT: 2 EA – DORMA E80624 x 626
2. EXIT DEVICE: 2EA - VON DUPRIN QEL RX 3547L x 24VDCx 626
3. CONCEALED DOOR OPERATOR: 2 EA - DORMA ED400-IG x AL
4. HC ACTUATORS: 2 EA – LCN 8310-856 x 630
5. HC ACTUATOR BOLLARD: 1 EA – LCN 8310-3836T x 630
6. DOOR PULLS: 2 EA – IVES 9264x84”xFlat-Tip x 630
7. DOOR POSITION SWITCH: 2 EA – GE 1078D
8. POWER SUPPLY: 1 EA – VON DUPRIN 902-2RS x GRY
9. WEATHERSTRIP AND THRESHOLD BY DOOR SUPPLIER
10. ELEVATION AND POINT TO POINT DRAWINGS

DOORS ARE NORMALLY LOCKED AND CLOSED. DOORS ARE UNLOCKED BY THE ACCESS CONTROL SYSTEM SOFTWARE AND CARD READER. ACTUATORS ONLY FUNCTION FROM THE OUTSIDE WITH A CARD READER. INSIDE ACTUATORS WORK AT ALL TIMES.

C. GROUP # 3 VESTIBULE DOORS (140B, 146D, 147A, 147B)

1. TOP POWER TRANSFER PIVOT: 2 EA – DORMA E80624 x 626
2. EXIT DEVICE: 2 EA – VON DUPRIN QEL RX 3547L x 24VDC x 626
3. CONCEALED DOOR OPERATOR: 1 EA - DORMA ED400-IG x AL
4. HC ACTUATORS: 1 EA – LCN 8310-856 x 630
5. HC ACTUATOR BOLLARD: 1 EA – LCN 8310-3836T x 630
6. DOOR PULLS: 2 EA – IVES 9264x36”xFlat-Tip x 630
7. DOOR POSITION SWITCH: 2 EA – GE 1078D
8. POWER SUPPLY: 1 EA – VON DUPRIN 902-2RS x GRY
9. WEATHERSTRIP AND THRESHOLD BY DOOR SUPPLIER
10. SET ELEVATION AND POINT TO POINT DRAWINGS

DOORS ARE NORMALLY LOCKED AND CLOSED. DOORS ARE UNLOCKED BY THE ACCESS CONTROL SYSTEM SOFTWARE AND CARD READER. ACTUATORS ONLY FUNCTION FROM THE OUTSIDE WITH A CARD READER. INSIDE ACTUATORS WORK AT ALL TIMES.

D. GROUP # 3A VESTIBULE DOORS (140A, 147A)

1. TOP POWER TRANSFER PIVOT: 2 EA – DORMA E80624 x 626
2. EXIT DEVICE: 2 EA – VON DUPRIN QEL RX 3547L x 24VDC x 626
3. CONCEALED DOOR OPERATOR: 1 EA - DORMA ED400-IG x AL
4. HC ACTUATORS: 1 EA – LCN 8310-856 x 630
5. DOOR PULLS: 2 EA – IVES 9264x36”xFlat-Tip x 630
6. DOOR POSITION SWITCH: 2 EA – GE 1078D
7. POWER SUPPLY: 1 EA – VON DUPRIN 902-2RS x GRY
8. WEATHERSTRIP AND THRESHOLD BY DOOR SUPPLIER
9. SET ELEVATION AND POINT TO POINT DRAWINGS

DOORS ARE NORMALLY LOCKED AND CLOSED. DOORS ARE UNLOCKED BY THE ACCESS CONTROL SYSTEM SOFTWARE AND CARD READER. ACTUATORS ONLY FUNCTION FROM THE OUTSIDE WITH A CARD READER. INSIDE ACTUATORS WORK AT ALL TIMES.

E. GROUP # 4 EXTERIOR DOORS (144)

1. CONT HINGE: 2 EA – MARKER FM300 EPT x 32D
2. POWER TRANSFERS: 2 EA – VON DUPRIN EPT-1024 x 626
3. EXIT DEVICE: 2 EA – VON DUPRIN QEL RX 3547L x 24VDC x 626
4. TRIM: 2 EA – VON DUPRIN 360NL x 626
5. CYLINDERS: 2 EA – SCHLAGE TO SUIT x 626
6. DOOR CLOSER: 2 EA – LCN 4041XP AVB x 689
7. DOOR POSITION SWITCH: 2 EA – GE 1078D
8. POWER SUPPLY: 1 EA – VON DUPRIN PS902-2RS x GRY
9. WEATHERSTRIP: 2 SET – ZERO 188S x GRY
10. THRESHOLD: 1 EA - ZERO 626A
11. ELEVATION AND POINT TO POINT DRAWINGS

DOORS ARE NORMALLY LOCKED AND CLOSED. DOORS ARE UNLOCKED BY THE ACCESS CONTROL SYSTEM SOFTWARE AND CARD READER. FREE EXIT AT ALL TIMES

F. GROUP # 5 EXTERIOR ELECTRICAL RM DOORS (119B)

1. CONT HINGE: 2 EA – MARKER FM300 x 32D
2. EXIT DEVICE: 2 EA – VON DUPRIN 3547-L x 626
3. TRIM: 2 EA – VON DUPRIN 360NL x 626
4. CYLINDERS: 2 EA – SCHLAGE TO SUIT x 626
5. DOOR CLOSER: 2 EA – VON DUPRIN 4041XP AVB x 689
6. WALL STOP: 2 EA – IVES WS406 CVX x 630
7. DOOR POSITION SWITCH: 2 EA – GE 1078D
8. WEATHERSTRIP: 1 SET – ZERO 188S x GRY
9. THRESHOLD: 1 EA - ZERO 626A

G. GROUP # 6 CENTRAL FILES – NON RATED (113A, 113B, 126)

1. HINGE: 5 EA – HAGAR AB800 4-/1/2” x 4-1/2” NRP x 32D
2. TRANSFER HINGE: 1 EA – HAGAR BB1199 ETW-6 4-/1/2” x 4-1/2” x 32D

3. ELEC LOCKSET: 1 EA – SCHLAGE L9080 EU RX x 24VDC-M51 x 630
4. TRIM: 1 EA - SCHLAGE L9176-M51 X 10-091x 630
5. MANUAL FLUSH BOLT: 1 EA – IVES 262 x 26D
6. DOOR POSITION SWITCH: 2 EA – GE 1078D
7. POWER SUPPLY: 1 EA – VON DUPRIN PS902 x GRY
8. WALL STOP: 2 EA – IVES WS406 CVX x 630
9. ELEVATION AND POINT TO POINT DRAWINGS

DOORS ARE NORMALLY LOCKED AND CLOSED. DOORS ARE UNLOCKED BY THE ACCESS CONTROL SYSTEM SOFTWARE AND CARD READER. FREE EXIT AT ALL TIMES

H. GROUP # 7 STORAGE (301A, 301C, 327A, 331B)

1. HINGE: 3 EA – HAGAR AB800 4-/1/2" x 4-1/2" NRP x 32D
2. STOREROOM LOCKSET: 1 EA – SCHLAGE L9080-M51 x 630
3. WALL STOP: 1 EA – IVES WS406 CVX x 630

I. GROUP # 7A STORAGE (406, 407, 408, 409, 410, 411, 412, 413, 414, 415)

4. HINGE: 3 EA – HAGAR AB800 4-/1/2" x 4-1/2" NRP x 32D
5. STOREROOM LOCKSET: 1 EA – SCHLAGE L9080-M51 x 630
6. OVERHEAD STOP: 1 EA – GLYNN JOHNSON GJ100 SERIES x 630

J. GROUP # 8 CORRIDOR DOORS-RATED (100F, 100G, 100H, 146A, 146B)

1. HINGE: 4 EA – HAGAR AB850 4-/1/2" x 4-1/2" NRP x 32D
2. TRANSFER HINGE: 2 EA – HAGAR AB850 ETW-6 4-/1/2" x 4-1/2" x 32D
3. EXIT DEVICE: 2 EA – VON DUPRIN QEL 9847L-F x 24VDC x 626
4. TRIMS: 2 EA – VON DUPRIN 996NL x 626
5. CYLINDERS: 2 EA – SCHLAGE TO SUIT x 626
6. DOOR CLOSER: 2 EA – LCN 4041XP AVB x 689
7. WALL STOP: 2 EA – IVES WS406 CVX x 630
8. KICK PLATE: 2 EA – IVES 8400 8" X 1.5" LDW x 32D
9. DOOR POSITION SWITCH: 2 EA – GE 1078D
10. POWER SUPPLY: 1 EA – VON DUPRIN PS902-2RS x GRY
11. PERIMETER GASKET: 1 SET – ZERO 188S x BLK
12. ELEVATION AND POINT TO POINT DRAWINGS

DOORS ARE NORMALLY LOCKED AND CLOSED. DOORS ARE UNLOCKED BY THE ACCESS CONTROL SYSTEM SOFTWARE AND CARD READER. FREE EXIT AT ALL TIMES

K. GROUP # 9 CORRIDOR DOORS-RATED (141A, 141C)

1. HINGE: 6 EA – HAGAR AB850 4-/1/2" x 4-1/2" NRP x 32D

2. EXIT DEVICE: 2 EA – VON DUPRIN 9847L-F x 626
3. TRIMS: 2 EA – VON DUPRIN 996NL x 626
4. CYLINDERS: 2 EA – SCHLAGE TO SUIT x 626
5. DOOR CLOSER: 2 EA – LCN 4041XP AVB x 689
6. WALL STOP: 2 EA – IVES WS406 CVX x 630
7. KICK PLATE: 2 EA – IVES 8400 8" X 1.5" LDW x 32D
8. PERIMETER GASKET: 1 SET - ZERO 188S x GRY

L. GROUP # 10 OFFICE/INTERVIEW – NON RATED (101,102,104,106,108,110,134, 136B, 139B, 201A, 201B, 207, 300A, 300B, 300C, 300D, 300E, 300F, 301 301B, 302, 329A, 329B, 329C, 330, 330A, 330B, 331, 331C, 332)

1. HINGE: 3 EA – HAGAR AB800 4-/1/2" x 4-1/2" x 32D
2. CLASSROOM LOCKSET: 1 EA – SCHLAGE L9053-M51x 630
3. WALL STOP: 1 EA – IVES WS406 CVX x 630
4. SILENCERS: 3 EA – GLYNN JOHNSON GJ64 x GRY

M. GROUP # 11 DOORS-RATED (100E, 133)

1. HINGE: 2 EA – HAGAR AB800 4-/1/2" x 4-1/2" NRP x 32D
2. TRANSFER HINGE: 1 EA – HAGAR AB800 ETW-6 4-/1/2" x 4-1/2" x 32D
3. ELEC LOCKSET: 1 EA – SCHLAGE L9080 EU RX x 24VDC-M51 x 630
4. DOOR CLOSER: 1 EA – LCN 4041XP AVB x 689
5. DOOR POSITION SWITCH: 1 EA GE 1078D
6. POWER SUPPLY: 1 EA – VON DUPRIN PS902 x GRY
7. KICK PLATE: 1 EA – IVES 8400 8" X 1.5" LDW x 32D
8. WALL STOP: 1 EA – IVES WS406 CVX x 630
9. PERIMETER GASKET: 1 SET - ZERO 188S x GRY
10. ELEVATION AND POINT TO POINT DRAWINGS

DOORS ARE NORMALLY LOCKED AND CLOSED. DOORS ARE UNLOCKED BY THE ACCESS CONTROL SYSTEM SOFTWARE AND CARD READER. FREE EXIT AT ALL TIMES

N. GROUP # 12 GANG TOILET-NON RATED (114, 118, 128, 132, 208, 212, 215, 219, 310, 314, 319, 323)

1. HINGES: 3 EA – HAGAR AB850 4-/1/2" x 4-1/2" x 32D
2. DOOR CLOSER: 1 EA – LCN 4041XP AVB x 689
3. DOOR PULL: 1 EA – IVES 8103 X 12" x 630
4. PUSH PLATE: 1 EA – IVES 8200 3 ½ x 15" x 630
5. KICK PLATE: 1 EA – IVES 8400 8" X 1.5" LDW x 32D
6. WALL STOP: 1 EA – IVES WS406 CVX x 26D
7. DOOR SILENCERS: 3 EA – GLYNN JOHNSON GJ64 x GRY

O. GROUP # 13 STOREROOM/JANITOR – NON RATED (115, 116, 116A, 117, 123A, 125, 127, 127A, 127B, 129, 130, 130A, 131, 209, 210, 210A, 211, 216, 217, 217A, 218, 311, 312, 312A, 313, 320, 321, 321A, 322)

1. HINGES: 3 EA – HAGAR AB800 4-/1/2" x 4-1/2" NRP x 32D
2. STOREROOM LOCKSET: 1 EA – SCHALAGE L9080-M51x 630
3. KICK PLATE: 1 EA – IVES 8400 8" X 1.5" LDW x 32D

4. WALL STOP: 1 EA – IVES WS406 CVX x 26D
5. DOOR SILENCERS: 3 EA – GLYNN JOHNSON GJ64 x GRY

P. GROUP # 14 MECHANICAL–RATED (400)

1. HINGES: 3 EA – HAGAR AB800 4-/1/2" x 4-1/2" NRP x 32D
2. STOREROOM LOCKSET: 1 EA – SCHLAGE L9080-M51x 630
3. DOOR CLOSER: 1 EA – LCN 4041XP AVB x 689
4. KICK PLATE: 1 EA – IVES 8400 8" X 1.5" LDW x 32D
5. WALL STOP: GLYNN JOHNSON WS406 CVX x 26D
6. PERIMETER GASKET: 1 SET - ZERO 188S x BLK

Q. GROUP # 15 STOREROOM/JANITOR –RATED (119)

1. HINGES: 6 EA – HAGAR AB800 4-/1/2" x 4-1/2" x 630
2. EXIT DEVICE: 2 EA – VON DUPRIN 9847L-F x 626
3. TRIM: 2 EA – VON DUPRIN 996NL VD x 626
4. CYLINDERS: 2 EA – SCHLAGE TO SUIT x 626
5. DOOR CLOSER: 2 EA – LCN 4041XP AVB x 689
6. KICK PLATE: 2 EA – IVES 8400 8" X 1.5" LDW x 32D
7. PERIMETER GASKET: 1 SET - ZERO 188S x BLK

R. GROUP # 16 UTILITY –RATED (119A, 122A, 122B)

1. HINGES: 3 EA – HAGAR AB800 4-/1/2" x 4-1/2" NRP x 32D
2. EXIT DEVICE: 1 EA – VON DUPRIN 98L-F x 626
3. TRIM: 1 EA - VON DUPRIN 996NL x 626
4. CYLINDERS: 1 EA – SCHLAGE TO SUIT x 626
5. DOOR CLOSER: 1 EA – LCN 4041XP AVB x 689
6. KICK PLATE: 1 EA – IVES 8400 8" X 1.5" LDW x 32D
7. PERIMETER GASKET: 1 SET - ZERO 188S x BLK

S. GROUP # 17 UTILITY/STORAGE –NON RATED (120A, 120B, 120C, 122, 213A, 315)

1. HINGES: 6 EA – HAGAR AB800 4-/1/2" x 4-1/2" NRP x 32D
2. STOREROOM LOCKSET: 1 EA – SCHALGE L9080-M51x 630
3. TRIM: 1 EA – SCHLAGE L9176-M51 x 10-091 x 630
4. DOOR CLOSER: 2 EA – LCN 4041XP AVB x 689
5. MANUAL FLUSH BOLT: 1 EA – IVES 262 x 626
6. KICK PLATE: 2 EA – IVES 8400 8" X 1.5" LDW x 32D

T. GROUP # 18 STORE –NON RATED (123)

1. HINGE: 3 EA - PROVIDED BY WALL SYSTEM MANUFACTURER
2. LOCKSET: 1 EA – PROVIDED BY WALL SYSTEM MANUFACTURER
3. PULL: 2 EA - PROVIDED BY WALL SYSTEM MANUFACTURER

U. GROUP # 19 TOILET/SHOWER - NON RATED (124, 302A, 328A, 331A)

1. HINGES: 6 EA – HAGAR AB800 4-/1/2" x 4-1/2" x 32D
2. PRIVACY LOCKSET: 1 EA – SCHLAGE L9040-M51 x 630
3. WALL STOP: 1 EA – IVES WS406 CVX x 26D
4. PERIMETER GASKET: 1 SET - ZERO 188S x GRY

V. GROUP # 20 – NOT USED

W. GROUP # 21 EXTERIOR MECHANICAL ROOM –NON RATED (401)

1. HINGES: 6 EA – HAGAR AB800 4-/1/2" x 4-1/2" NRP x 32D
2. STOREROOM LOCKSET: 1 EA – SCHALGE L9080-M51x 630
3. TRIM: 1 EA – SCHLAGE L9176-M51 x 10-091 x 630
4. DOOR CLOSER: 2 EA – LCN 4041XP AVB x 689
5. MANUAL FLUSH BOLT: 1 EA – IVES 262 x 626
6. KICK PLATE: 2 EA – IVES 8400 8" X 1.5" LDW x 32D
7. THRESHOLD: 1 EA – ZERO 656B
8. PERIMETER GASKET: 1 SET - ZERO 188S x BLK

X. GROUP # 22 STAIR –RATED (141B, 146C, 200A, 200C, 334A, 334B, 403, 404)

1. HINGES: 3 EA – HAGAR AB850 4-/1/2" x 4-1/2" NRP x 32D
2. EXIT DEVICE: 1 EA – VON DUPRIN 98L-F x 626
3. TRIM: 1 EA – VON DUPRIN 996NL x 626
4. CYLINDERS: 1 EA – SCHLAGE TO SUIT x 626
5. DOOR CLOSER: LCN 4041XP AVB x 689
6. KICK PLATE: 1 EA IVES 8400 8" X 1.5" LDW x 32D
7. PERIMETER GASKET: 1 SET - ZERO 188S x GRY

Y. GROUP # 23 DOOR –NON RATED (139A, 143A)

1. HINGES: 6 EA – HAGAR AB800 4-/1/2" x 4-1/2" x 32D
2. PASSAGE LOCKSET: 1 EA – SCHLAGE L9010-M51 x 630
3. WALL STOP: 1 EA – IVES WS406 CVX x 630
4. DOOR SILENCERS: 3 EA – GLYNN JOHNSON GJ64 x GRY

Z. GROUP # 24 SECURE DOORS – NON RATED (111A, 111B, 111C, 111D, 111E, 111F, 111G, 133A, 135, 136, 136C, 138, 138A, 139, 139D, 300G, 300F, 301, 328)

1. HINGE: 2 EA – HAGAR AB800 4-/1/2" x 4-1/2" NRP x 32D
2. TRANSFER HINGE: 1 EA – HAGAR AB800 ETW-6 4-/1/2" x 4-1/2"x 32D
3. ELEC LOCKSET: 1 EA – SCHLAGE L9080 EU RX x 24VDC-M51x 630
4. DOOR CLOSER: 1 EA – LCN 4041XP AVB x 689
5. DOOR POSITION SWITCH: 1 EA – GE 1078D
6. KICK PLATE: 1 EA – IVES 8400 8" X 1.5" LDW x 32D
7. WALL STOP: 1 EA – IVES WS406 CVX x 630
8. DOOR SILENCERS: 3 EA – GLYNN JOHNSON GJ64 x GRY

DOORS ARE NORMALLY LOCKED AND CLOSED. DOORS ARE UNLOCKED BY THE ACCESS CONTROL SYSTEM SOFTWARE AND CARD READER. FREE EXIT AT ALL TIMES

AA. GROUP #25 EXTERIOR MECHANICAL (402)

1. HINGES: 3 EA – HAGAR AB800 4-/1/2" x 4-1/2" NRP x 32D
2. STOREROOM LOCKSET: 1 EA – SCHALGE L9080-M51x 630
3. DOOR CLOSER: 1 EA – LCN 4041XP AVB x 689
4. KICK PLATE: 1 EA – IVES 8400 8" X 1.5" LDW x 32D
5. THRESHOLD: 1 EA – ZERO 656A
6. PERIMETER GASKET: 1 SET - ZERO 188S x BLK

EE. GROUP #26 ACCESS DOORS

1. CYLINDER: 1 EA – SCHLAGE TO SUIT x 626

II. GROUP #27 SECURE FILES AND CONFERENCE (221, 303, 333A, 333B)

1. HINGE: 3 EA - PROVIDED BY WALL SYSTEM MANUFACTURER
2. ELEC LOCKSET: 1 EA – SCHLAGE L9080 EU RX x 24VDC-M51x 630
3. FLOOR STOP: 1 EA – IVES FS410 x 26D
4. SILENCERS: 3 EA – PROVIDED BY WALL SYSTEM MANUFACTURER

JJ. GROUP #28 STAIR DOORS- RATED (100J)

1. HINGE: 6 EA – HAGAR AB850 4-/1/2" x 4-1/2" NRP x 32D
2. EXIT DEVICE: 2 EA – VON DUPRIN 9847L-F x 626
3. TRIM: 2 EA – VON DUPRIN 996NL x 626
4. CYLINDERS: 2 EA – SCHLAGE TO SUIT x 626
5. HOLD OPEN/RELEASE: 2 EA – RIXON 996 x 120VAC x 689
6. DOOR CLOSER: 2 EA – LCN 4041XP AVB x 689
7. WALL STOP: 2 EA – IVES WS406 CVX x 630
8. KICK PLATE: 2 EA – IVES 8400 8" X 1.5" LDW x 32D
9. PERIMETER GASKET: 1 SET - ZERO 188S x GRY

KK. GROUP # 29 OFFICE (101,102,103,104,106,108,110,134, 136B, 139B, 202, 205, 222, 224, 304, 305, 306, 308, 308A, 325, 325A, 326, 333, 334, 335, 336, 337, 338, 339, 340, 341, 342,343, 344, 345, 346, 347, 348, 349, 350, 351, 352, 353, 354)

1. HINGE: 3 EA - PROVIDED BY WALL SYSTEM MANUFACTURER
2. OFFICE LOCKSET: 1 EA – SCHLAGE L9053-M51 x 630
3. FLOOR STOP: 1 EA – IVES FS410 x 26D
4. SILENCERS: 3 EA - PROVIDED BY WALL SYSTEM MANUFACTURER

LL. GROUP # 30 GLASS DOORS (134A, 204, 204A, 214, 214A, 223, 223A, 307, 307A, 318, 318B, 333B)

1. HINGE: 3 EA - PROVIDED BY WALL SYSTEM MANUFACTURER
2. OFFICE LOCKSET: 1 EA – BY WALL SYSTEM MANUFACTURER x 630
3. LEVER TRIM: 1EA – SCHLAGE M51 x 630

4. CYLINDER: 1 EA – SCHLAGE TO SUIT
5. FLOOR STOP: 1 EA – IVES FS410 x 26D
6. SILENCERS: 3 EA - PROVIDED BY WALL SYSTEM MANUFACTURER

MM. GROUP # 31 MOTHERS NURSING - NON RATED (137, 213, 316)

1.	3	EA	HINGE	AB800 4-/1/2" x 4-1/2" NRP	HA	32D
2.	1	EA	KEYPAD LOCKSET	KP8278	DO	626
3.	1	EA	WALL STOP	WS406 CVX	IV	26D

NN. GROUP # 32 VESTIBULE DOORS (141D)

1. PIVOT HINGE: 1 EA – DORMA BTS8062 x 32D
2. INTERMEDIATE HINGE: 1 EA - DORMA BTS8062 x 32D
3. EXIT DEVICE: 1 EA – VON DUPRIN 3547L x 24VDC x 626
4. TRIM: 2 EA – VON DUPRIN 360NL x 626
5. CYLINDERS: 2 EA – SCHLAGE TO SUIT x 626
6. DOOR PULLS: 2 EA – IVES 9264x36"xFlat-Tip x 630
7. DOOR POSITION SWITCH: 2 EA – GE 1078D
8. WEATHERSTRIP AND THRESHOLD BY DOOR SUPPLIER
9. ELEVATION AND POINT TO POINT DRAWINGS

OO. GROUP #33 STAIR DOORS- RATED (200B)

1. HINGES: 3 EA – HAGAR AB850 4-/1/2" x 4-1/2" NRP x 32D
2. EXIT DEVICE: 1 EA – VON DUPRIN 98L-F x 626
3. TRIM: 1 EA – VON DUPRIN 996NL x 626
4. CYLINDER: 1 EA – SCHLAGE TO SUIT x 626
5. DOOR CLOSER: 1 EA – LCN 4041XP AVB x 689
6. WALL STOP: 1 EA – IVES WS406 CVX x 630
7. KICK PLATE: 1 EA – IVES 8400 8" X 1.5" LDW x 32D
8. PERIMETER GASKET: 1 SET - ZERO 188S x GRY

PP. GROUP #34 LOBBY GATE (100)

1. HINGE: PROVIDED BY GATE SYSTEM MANUFACTURER
2. MORTISE PASSAGE LOCKSET: 1 EA – BY GATE SYSTEM MANUFACTURER x 630
3. LEVER TRIM: 1EA – SCHLAGE M51 x 630
4. ELECTRIC STRIKE: 1 EA – VON DUPRIN 4200
5. REQUEST TO EXIT: 1 EA –HEYCE IR
6. POWER SUPPLY: 1 EA - POWER SUPPLY: 1 EA – VON DUPRIN PS902-2RS x GR

DOORS ARE NORMALLY LOCKED AND CLOSED. DOORS ARE UNLOCKED BY THE ACCESS CONTROL SYSTEM SOFTWARE AND CARD READER. EGRESS VIA REQUEST TO EXIT. FREE EXIT AT ALL TIMES AT FIRE ALARM AND/OR POWER FAILURE

2.05 KEYING

A. Continue existing Grand Master key system established for Facility.
   1. Stamp key symbol on one side of key, and "Do Not Duplicate" on other side of key.
   3. Furnish one copy of factory bitting list to facility.

4. Factory key cylinders.
5. Furnish 3 cut keys for each master key.
6. Furnish 7 cut keys for each keyed lockset.
7. These cut key quantities are for bidding purposes only. Actual number of cut keys required will be determined at keying meeting.
8. When lockset and cylinder are by different manufacturers, identify and furnish correct cylinder cam to operate lockset.
9. Provide compression rings and spacers to achieve proper spacing relationship between cylinder and face of door.

B. Keying Conference
1. Immediately following contract award, Director's Representative will schedule a keying conference to develop a written key schedule that reflects Facility's specific keying requirements. Facility Representative(s), Hardware Distributor, Consulting Hardware Designer, and OGS's Hardware Designer will attend.
2. Incorporate this schedule in Finish Hardware Submittals for approval.

PART 3 EXECUTION

3.01 EXAMINATION

A. Examine doors and frames and related items for conditions such as, but not limited to, incorrect handing, hardware preparation, misaligned lock and strike preparations, that would prevent proper application of finish hardware. Do not proceed until defects are corrected.

B. Report conditions or hardware applications that are incorrect to the Director's Representative.

3.02 INSTALLATION

A. Do not proceed with installation of finish hardware prior to attending referenced pre-installation conference.

B. Installation Sequence: Use proper installation sequence, i.e., install coordinators, and overhead stops and holders before surface mounted door closers.

C. Install hardware in accordance with manufacturer's printed installation instructions, and adjust for smooth operation, free of sticking, binding or rattling.
1. Template surface overhead stops and holders for proper operation
2. Template and adjust closers for proper operation.

D. Use proper tools and methods to prevent scratches, burrs or other defacement.

E. Boxed Power Supplies: Locate power supplies as indicated or, if not indicated, in equipment room. Verify location with Architect

F. Threshold Installation:

1. Drill holes 3 inches from each end of threshold and intermediate holes 12 inches maximum o.c. for required fasteners. Prepare holes for countersunk fasteners.
2. Level and align thresholds with frames and doors. Where required, use non-corrosive shims.
3. Exterior Doors: Set thresholds in a solid bed of Type 3 sealant.
4. Secure thresholds to substrate with countersunk fasteners.

G. Door Bottom Installation:
1. Mount sweep type door bottom protection/drip caps on exterior side of doors.
2. Before mounting apply Type 2 sealant on the back side of bearing surface. Secure to door with required fasteners.

H. Gasket Installation:
1. Install continuous stripping at each opening without unnecessary interruptions.
2. Where fasteners are required, secure fasteners for stripping and seals so they will not work loose during door operation. Exposed heads of fasteners shall be free of sharp edges.
3. Coordinate meeting stile gasket with hardware before installation.
4. Install units plumb and level at the optimum location to maintain a permanent effective seal.

I. After installation, cover and protect hardware to prevent damage during remaining construction. Remove protection upon completion of construction.

3.03 LOCATIONS

A. Locate hardware as follows:
1. Door Closers: Template for maximum door swing allowed by wall placement and jamb conditions. Where overhead stop prevents door from swinging to wall, template the closer to exceed degree of opening allowed by overhead stop.
2. Protection Plates: 1/8 inch from door bottom.
3. Wall Stops: Centerline of bumper to match centerline of locking trim.

3.04 FIELD QUALITY CONTROL

A. Post Installation Review: After hardware is adjusted for proper operation, Director's Representative will hold a Post-Installation Review with the Contractor, Hardware Designer, Company Field Advisors, Hardware Distributor and Hardware Installers.
1. Physically inspect to verify proper application, installation, adjustment and operation of finish hardware, and in particular that:
   a) Latches engage freely without binding. Filing of strike plates to relieve latch bind is not acceptable.
   b) Closers are adjusted for proper spring power; sweep speed, latching speed; and hydraulic back check.

c) Locations and proper attachment of installed protective hardware are as specified.
d) There is no field modification of fasteners.
e) Damaged fasteners are replaced.

2. Defective hardware is repaired or replaced.
3. Hardware is to be left clean and free from disfigurement.

B. Turn referenced Operations and Maintenance Manuals over to Facility through Director's Representative.

END OF SECTION

SECTION 093013

CERAMIC TILE

PART 1 GENERAL

1.01 RELATED WORK SPECIFIED

A. Resilient Flooring: Section 096517

1.02 REFERENCES

A. Tile Manufacturing Standard: Comply with the requirements of ANSI "American National Standard Specifications for Ceramic Tile" (ANSI A137.1)

B. Installation Standards: Comply with the requirements of ANSI "American Standard Specifications for the Installation of Ceramic Tile" (ANSI A108, A118 and A136), and correlating Tile Council of America (TCA) details except as shown or specified otherwise.

1.03 SUBMITTALS

A. Product Data: Catalog sheets, specifications, and installation instructions for each of the following:
   1. Tile and trim units.
   2. Setting materials, except reinforcement, membrane, and primer.
   3. Grouting materials.
   4. Marble door threshold.
   5. Metal edge strips including metal nosing at stair treads.
   6. Installers' Qualification Data:
      a. Name of each person who will be performing the work and their employer's name, business address, and telephone number.
      b. Names and addresses of 3 similar projects that each person has worked on during the past 5 years

B. Samples:
   1. Tile and Grout: Each type and color required; 12 x 12 inch samples with tile mounted on braced cement backer board and grouted.
   2. Trim Units: Each type and shape required.
   3. Color Samples:
      a. Tile manufacturer's standard range of colors and textures for each tile type required.
      b. Grout manufacturer's standard range of colors for each grout type required.
   4. Marble door threshold – 6" length.
   5. Metal edge strips – 6" length.

C. Quality Control Submittals:
   1. Tile Grade Certificates: Furnish tile manufacturer's Master Grade Certificate bearing the manufacturer's certification for each shipment, type and composition of tile.

1.04 QUALITY ASSURANCE

A. Manufacturer:
   1. Obtain each color, grade, finish, type, composition, and variety of tile from one source with resources to provide products from the same production run for each contiguous area of consistent quality in appearance and physical properties without delaying the Work.
   2. Obtain ingredients of a uniform quality for each mortar, waterproof membrane, adhesive, and grout component from a single manufacturer and each aggregate from one source or producer.

B. Certifications:
   1. Tile manufacturer's Master Grade Certification for each shipment of tile.

C. Installers' Qualifications: The persons installing the work of this Section and their Supervisor shall be personally experienced in ceramic tile installation and shall have been regularly employed by a Company installing ceramic tile for a minimum of 5 years.

D. Pre-installation Conference: Before the work of this Section is scheduled to begin, a conference will be called by the Director's Representative at the site for the purpose of reviewing the Drawing and the Specifications and discussing requirements for the Work. The conference shall be attended by the Contractor, the ceramic tile installers, and if needed the ceramic tile distributor.
   1. Review requirements in ANSI A108.01 for substrates and for preparation by other trades.
   2. Installer to confirm substrate meets flatness criteria as per the TCA Handbook and per manufacturer's installation requirements.

E. Performance Criteria:
   1. The following criteria are required for products included in this section:
      a. All ceramic flooring must be certified as compliant with the FloorScore standard by an independent third-party.
      b. Tile setting adhesives and grout must not exceed the volatile organic compound (VOC) content limits established in South Coast Air Quality Management District (SCAQMD) Rule 1168.

F. Mockups: Build mockups to verify selections made under sample submittals and to demonstrate aesthetic effects and set quality standards for materials and execution.
   1. Build mockup of each type of floor tile installation in location as coordinated with Director's Representative.
   2. Build mockup of each type of wall tile installation in location as coordinated with Director's Representative.

3. Approved mockups may become part of the completed Work if undisturbed at time of Substantial Completion.

1.05 DELIVERY, STORAGE AND HANDLING

A. Deliver and store packaged materials in original containers with seals unbroken and labels intact until time of use. Comply with requirement of ANSI A137.1 for labeling sealed tile packages.

B. Prevent damage or contamination to materials by water, freezing, foreign matter, and other causes.

1.06 PROJECT CONDITIONS

A. Environmental Requirements: Do not install tile until construction in spaces is completed. Set and grout tile when ambient temperature is 50 degrees F (10 degrees C) or higher and humidity conditions are being maintained. Substrate must be free of ice. All work to meet material manufacturer's recommendations.

1.07 MAINTENANCE

A. Extra Materials: Furnish extra tile, equal to 3 percent of the tile installed, of each type, composition, pattern, size and color of tile required. Also, furnish a proportionate number of trim units. Place extra materials packaged with protective covering in storage at the site where directed.

PART 2 PRODUCTS

2.01 TILE

A. Basis of Design Product: Subject to compliance with requirements, provide tiles as indicated below, as manufactured by: Casal Grande Padana, ProSpec, Mannington

1. Porcelain Tile, Series Pietre Etrusche, Color: Manciano, Size: 24" x 24", Finish: Matte, Semi-Polished. Casal Grande Padana, **(PT-1)**
2. Porcelain Tile; Series Cemento, Color: Cemenot Cassero Bianco, Size: 24" w/ Varying Length. Casal Grande Padana, **(PT-4)**
3. Ceramic Tile; Pro Modular Tile System, Color: Pure White, Finish: Glazed, Size: 4" x 12". ProSpec, LLC, **(CT-1)**
4. Ceramic Tile; Pro Modular Tile System, Color: Pure White, Finish: Glazed, Size: 4" x 8". ProSpec, LLC **(CT-2)**
5. Porcelain Wall Tile; MOSA, Terra Tones Pattern PT2589, Colors 216Y, 216XV and 216 ZV, Sizes: 2"x24", 4"x24" and 6"x24", Mannington **(PWT-1)**
6. Porcelain Wall Tile; Series Pietre Etrusche, Color: Capalbio, Size: 6" x 24", Finish: Matte, Semi-Polished. Casal Grande Padana, **(PB-1)**
7. Porcelain Wall Tile; Series Pietre Etrusche, Color: Capalbio, Size: 4" x 24", Finish: Matte, Semi-Polished. Casal Grande Padana, **(PB-2)**

8. Porcelain Wall Tile; Series Pietre Etrusche, Color: Manciano, Size: 6” x 24”, Finish: Matte, Semi-Polished. Casal Grande Padana, **(PB-3)**

B. Acceptable Manufacturers: Subject to compliance with requirements, available manufacturers offering products that may be incorporated into the Work include the following:
   1. Casal Grande Padana, Via Statale, 467, 73, 42013 Casalgrande RE, Italy+39 0522 9901, www.casalgrandepadana.com
   2. ProSpec, LLC, 230 East 7th Street, Mount Vernon NY 10550 • Tel: 914.665.0654, www.ProSpecjllc.com
   3. Mannington Mills, Inc, Calhoun, GA 30703, (800) 241-2262 www.mannington.com. Basis of Design

C. Ceramic porcelain floor tile as follows:
   1. Manufactured in a two-layer process that results in a tile that is dense, impervious, fine-grained, directional pattern, unglazed, rectified modular, for installation in patterns as indicated
   2. Floor tiles size(s): 12”x24”, 30cm x 60cm (median actual size 297mm x 597mm), square edges, smooth matt texture
   3. Colors: As noted under 2.01 TYPES
   4. Weight: 5.69 lbs/ft^2
   5. Slip Resistance: COF: 0.89 (dry)/0.77 (wet); DCOF: 0.76

D. Physical Characteristics: Floor tile shall have the following physical characteristics when tested by an independent testing agency in accordance with the referenced testing procedure:

Property		ASTM Test	Results
Water absorption		C373	Surface < 0.05% Body < 0.3%
Abrasive wear		C1243	88m^3
Breaking strength		C648	> 470kg
Bond strength		C482	1696 kPa
Freeze/thaw cycle		C1026	Frost proof
Mohs scale		C1026	8
Modulus of rupture		C674	52.74 MPa
Coefficient of friction (smooth matte)		C1028	0.89 (dry); 0.77 (wet)
Dynamic coefficient of friction		BOT 3000	0.76
Dimensional tolerances:			
	Face dimension (range)	C499	+/- 0.19%
	Thickness (range)	C499	+/- 0.48mm
Warpage:			
	Rectified edge:	C485	-0.12% < x < -0.02%
	Rectified diagonal:	C485	-0.14% < x < -0.02%
	Rectified wedging:	C485	-0.14% < x < -0.16%

2.02 SETTING MATERIALS

A. Portland Cement Mortar: Complying with ANSI A 108.1, or ANSI A 108.5 in combination with ANSI A 108.1.
   1. Portland Cement: ASTM C 150, Type 1.
   2. Sand: ASTM C 144.
   3. Hydrated Lime: ASTM C 206 or ASTM C 207, Type S.
   4. Water: Clean and potable.
   5. Reinforcement:
      a. Walls: 2.5 pound flat expanded metal lath.
         1) Interior Work: ASTM C 847, except steel need not be copper-bearing and may have a paint finish.
         2) Exterior Work: ASTM C 847, galvanized, copper-bearing steel.
      b. Floors: Wire fabric; 2 by 2 inch, 16/16 gage, galvanized welded steel wire mesh unless otherwise shown.
   6. Cleavage Membrane: Asphalt felt, ASTM D 226, Type I (No. 15), or polyethylene sheeting ASTM D 4397, 4.0 mils thick.
   7. Latex additive (water emulsion) described below, serving as replacement for part or all of gaging water, of type specifically recommended by latex additive manufacturer for use with job-mixed portland cement and aggregate mortar bed.
      a. Latex Additive: Manufacturer's standard.

B. Dry-Set Mortar: Complying with ANSI A 118.1, and meeting the requirements for setting the particular type of tile to be set with the mortar.

C. Latex-Portland Cement Mortar: Complying with ANSI A 118.4.

E. Epoxy Mortar: Complying with ANSI A 118.3, chemical resistant, and water cleanable before setting.

F. Epoxy Adhesive: Complying with ANSI A 118.3, and water cleanable before setting.

G. Organic Adhesive: Complying with ANSI A 136.1, Type 1. Adhesive shall be recommended by the manufacturer for the application indicated.

H. Primer: As recommended by the mortar/adhesive manufacturer.

2.03 GROUTING MATERIALS

A. Commercial Portland Cement Grout: Compound of Portland cement and additives, factory blended to decrease shrinkage and increase moisture resistance, and complying with ANSI A 118.6.

B. Dry-Set Grout: Compound of Portland cement and additives, factory blended for the type of tile to be grouted, and complying with ANSI A 118.6.

C. Latex-Portland Cement Grout: Compound of Portland cement grout with latex additive, complying with ANSI A 118.6.

1. Factory-Prepared, Dry-Grout Mixture: Factory-prepared mixture of portland cement; dry, redispersible, ethylene vinyl acetate additive; and other ingredients to produce the following:
   a. Unsanded grout mixture for joints 1/8 inch and narrower.

D. Colors:
1. Unless otherwise indicated, wall type grout shall be white and floor type grout shall be gray.
2. As selected by the Director from grout manufacturer's standard range of colors.

2.04 WATERPROOFING

A. General: Manufacturer's standard product that complies with ANSI A118.10 and is recommended by the manufacturer for the application indicated. Include reinforcement and accessories recommended by manufacturer.

B. Polyethylene Sheet: Polyethylene faced on both sides with fleece webbing; 0.008-inch nominal thickness.

1. Products: Subject to compliance with requirements, available products that may be incorporated into the Work include, but are not limited to, the following:

   a. Schluter Systems L.P.; KERDI.

2.05 MISCELLANEOUS MATERIALS

A. Metal Edge Strips: White zinc-alloy terrazzo strips, 1/8 inch wide at top edge with integral provision for anchorage to mortar bed or substrate, unless otherwise indicated.

B. Expansion Joint Materials:
1. Sealants:
   a. Traffic Areas: Polyurethane sealant with a Shore A hardness greater than 35; Federal Specification TT-S-00227 or TT-S-00230, Type I.
   b. Interior Wet Surfaces and Exterior Vertical Surfaces: Silicone sealant; Federal Specification TT-S-001543, Class A or TT-S-00230, Type I or Type II (Class A) as applicable.
   c. Other Surfaces: Polysulfide or polyurethane sealant; Federal Specification TT-S-00227 or TT-S-00230, Type I or Type II (Class A) as applicable.
2. Back-up Strip: Non-staining, flexible and compressible type of closed cell foam polyethylene or butyl rubber compatible with sealants used.

C. Trowelable Underlayments and Patching Compounds: Latex-modified, portland-cement-based formulation provided or approved by manufacturer of tile-setting materials for installations indicated.

2.06 TRENCH DRAIN

A. 16 gauge 304 Stainless Steel grate and channel.

1. Basis of Design: FFSG 6560 as manufactured by ID Infinity Drain, 18 Secatoag Avenue, Port Washington, NY 11050. Phone: 516.767.6786.

PART 3 EXECUTION

3.01 EXAMINATION

A. Examine substrates, areas, and conditions where tile will be installed, with Installer present, for compliance with requirements for installation tolerances and other conditions affecting performance of installed tile.

B. Do not proceed with installation until unsatisfactory conditions have been corrected.

3.02 PREPARATION

A. Provide concrete substrates for tile floors installed with dry-set or latex-portland cement mortars that comply with flatness tolerances specified in referenced ANSI A 108 series of tile installation standards for installations indicated.
   1. Use trowelable leveling and patching compounds per tile-setting material manufacturer's written instructions to fill cracks, holes, and depressions.
   2. Remove protrusions, bumps, and ridges by sanding or grinding.

B. Protection: Protect adjacent surfaces before tilework begins.

C. Cleaning: Clean substrate surfaces in accordance with applicable reference standards and manufacturer's installation instructions.

3.03 INSTALLATION

A. Install ceramic tile in accordance with ANSI A 108.1 thru ANSI A 108.7, as applicable for type of tile and method of installation, and in accordance with the printed installation instructions of the tile and setting material manufacturers.
   1. Neutralize and seal substrate as required by the mortar/adhesive manufacturer's instructions.
   2. Mix and apply proprietary setting and grouting materials in compliance with the manufacturer's instructions.

B. Setting Beds:
   1. Walls: Portland cement mortar.
   2. Walls: Dry-set mortar.
      a. Concrete Unit Masonry Walls: Apply a leveling coat of latex-Portland cement mortar, or an underpayment material recommended by the setting material manufacturer, to form true planes for thin-bed setting material prior to setting tile.

3. Walls: Latex-Portland cement mortar.
4. Walls: Organic adhesive.
5. Floors: Portland cement mortar.
6. Floors: Dry-set mortar.
7. Floors: Latex-Portland cement mortar.
8. Stairs: Portland cement mortar.

C. Joint Pattern: Install tile in grid pattern with 1/16 inch joint width, unless otherwise indicated.

D. Layout tilework on principal walls, with tilework field centered in both directions on the floor and lengthwise on walls in each space, so that no tile less than one-half full size will occur, unless otherwise approved to suit the features of the space. Align joints when adjoining tiles are the same size. Maintain uniform joint width.

E. Extend tilework into recesses and under equipment and fixtures, to form a complete covering without interruptions, except as otherwise shown. Terminate tilework neatly at obstructions, edges, and corners without disruption of pattern or joint alignments.

F. Accurately form intersections and returns. Perform cutting and drilling of tile without marring visible surfaces. Carefully grind cut edges of tile abutting trim, finish, or built-in items for straight aligned joints. Fit tile closely to electrical outlets, piping, fixtures, and other penetrations so plates, collars, or covers overlap tile.

G. Expansion and Control Joints: Comply with preparation, joint depths and widths, and installation requirements in the ANSI installation specifications. Keep expansion and control joints free of setting and grouting materials. Do not saw-cut joints after installing tiles.
1. Install continuous expansion joint at perimeter of floor/wall juncture.
2. Install sealants in accordance with manufacturer's printed instructions.

H. Edge Strips:
1. Install metal edge strips at edge of tile meeting other types of flooring, unless otherwise indicated.
2. Install metal nosing strips at stair treads and risers.

I. Grouting: Comply with ANSI A 108.10 or 108.6, as applicable for type of grout, and manufacturer's installation instructions. Make joints watertight, and without voids, cracks and excess grout. Damp cure in accordance with reference standards and manufacturer's instructions when applicable.

J. Install waterproofing to comply with waterproofing manufacturer's written instructions.
1. Do not install tile over waterproofing until waterproofing has cured and been tested to determine that it is watertight.

3.04 WATERPROOFING INSTALLATION

A. Install waterproofing to comply with ANSI A108.13 and manufacturer's written instructions to produce waterproof membrane of uniform thickness and bonded securely to substrate.

B. Do not install tile or setting materials over waterproofing until waterproofing has cured and been flood tested to determine that it is watertight.

3.05 TRENCH DRAIN INSTALLATION

A. Install trench drain to comply with manufacturer's written instructions.

3.05 ADJUSTING

A. Check the tilework installation. Remove defective tile and retile. Leave finished installation free of cracked, chipped, broken, unbonded, and otherwise defective tilework.

3.06 CLEANING

A. On completion of placement and grouting, clean all ceramic tile surfaces so they are free of foreign matter. Comply with grouting specifications and with grout manufacturer’s printed instructions for materials and method.

1. Remove latex-portland cement grout residue from tile as soon as possible.
2. Unglazed tile may be cleaned with acid solutions only when permitted by tile and grout manufacturer’s written instructions, but no sooner than 10 days after installation. Protect metal surfaces, cast iron, and vitreous plumbing fixtures from effects of acid cleaning. Flush surface with clean water before and after cleaning.

B. Clean and polish marble door thresholds. Remove stains and other defacement.

3.07 PROTECTION

A. Apply heavy kraft paper, or other approved heavy protective covering, masked in place over tilework to prevent staining, damage, and wear.

B. Prohibit foot and wheel traffic on newly tiled areas for seven days after completion of installation unless otherwise approved by the Director’s Representative.

C. Before final inspection, remove protective coverings and rinse neutral cleaner from tile surfaces.

END OF SECTION

Pre-Functional Checklist

Project: OGS SOB Building #4 – OGS #45124

Project No. 11123671

SECTION: 142100

ELEVATOR

1. Submittal / Approvals

Submittal: The above equipment and systems integral to them are complete and ready for functional testing. The checklist items are complete and have been checked off only by parties having direct knowledge of the event, as marked below, respective to each responsible contractor. This pre-functional checklist is submitted for approval, subject to an attached list of outstanding items yet to be completed. A Statement of Correction will be submitted upon completion of any outstanding areas. None of the outstanding items preclude safe and reliable functional tests being performed.
___ List attached.

_____ _____
Elevator Work Contractor Date

Pre-functional checklist items are to be completed as part of startup & initial checkout, preparatory to functional testing.

- This checklist does not take the place of the manufacturer's recommended checkout and startup procedures or report.
- Items that do not apply shall be noted with the reasons on this form (N/A = not applicable, BO = by others).
- Contractor's assigned responsibility for sections of the checklist shall be responsible to see that checklist items by their suppliers and vendors are completed and checked off.

Approvals: This filled-out checklist has been reviewed. Its completion is approved with the exceptions noted below.

_____ _____ _____ _____
Commissioning Agent Date Owner's Representative Date

2. Requested Documentation Submitted

Equipment No.--->	Included
Item	**Yes/No**
Manufacturer's data sheets	

3. Elevator Work

ITEM		7	7A	8
3.1	**Visual Inspection**			
3.1.1	Verify equipment nameplate in accordance with contract documents.			
3.1.2	Check clearances around equipment.			
3.1.3	Check physical condition of elevator equipment and components for any damage.			
3.1.4	Verify anchorage and correct alignment.			
3.1.5	Check proper equipment grounding.			
3.1.6	Clean elevator controllers.			
3.1.7	Clean elevator hoist equipment.			
3.1.8	Clean elevator car, inside and outside.			
3.1.9	Verify that equipment size and types correspond to approved shop drawings.			
3.1.10	Verify tightness of accessible bolted electrical connections by calibrated torque-wrench method.			
3.1.11	Verify installation complies with ASME 17.1.			
3.1.12	Check incoming line connections to main bus and proper phase rotation.			
3.1.13	Check all required calibration of instruments in accordance with contract documents and testing standards.			
3.1.14	Check control fuses, wiring, terminal strip identification per manufacturer’s certified documentation.			
3.1.15	Verify each adjustable relay, time delay, control module, and adjustable component is calibrated and tested in accordance with manufacturer’s instructions.			
3.1.16	Check that all controller filters and vents are clean and free of construction material.			
3.1.17	Verify correct operation of indicating lights, meters, gauges, etc.			

3.1.18	Check that all required labeling is provided.			
3.1.19	Verify that cut openings are patched and properly finished.			
3.1.20	Verify firestops are properly installed and complete.			
3.1.21	Verify equipment enclosures, structures, hoist machines and parts are properly painted and free from finish defects.			
3.1.22	Verify all tests required per ASME A17.1 latest issue Safety Code for Elevators and Escalators are ready for functional testing (all functional tests must be witnessed by a qualified elevator inspector (QEI)).			
3.1.23	Clean elevator work of dust, dirt, grease, and foreign materials.			
3.1.24	Remove articles of tools and material from shafts and machine rooms not necessary for maintenance and operation of elevator.			
3.1.25	Inspect, adjust, and test hoisting machine.			
3.1.26	Inspect and clean elevator car sling and platform. • Align car and adjust. • Examine car enclosure for structural soundness. Determine if car enclosure is securely fastened to car platform. • Examine for capacity plates. • Verify that top exit panels are in place. • Examine lighting fixtures to determine if they are securely fastened, have required protection, provide sufficient illumination, and battery backup functions. • Verify that telephones and alarms function. • Verify each call button has proper tactile pressure.			
3.1.27	Inspect door operators and system for proper and smooth operation, and verify components in door system are neatly and securely installed and aligned.			
3.1.28	Check infrared scanning devices (door protective devices) to confirm that device detects penetration of scanned curtain within specified range.			
3.1.29	Set drive isolation transformer taps to achieve correct voltage to elevator controller.			
3.1.30	Set and test settings on elevator drive microprocessor.			
3.1.31	Verify function and display on machine room video monitor, printer, and keyboard.			
3.1.32	Turn over to Owner portable keyboards and diagnostic tools. Have materials on hand for functional testing.			
3.1.33	Verify function of fault protection system; verify voltages and test phase loss to system.			

3.1.34	Power Off: Inspect control equipment for dirt, dust, grease or other foreign material that would prevent proper operation.			
3.1.35	Power On: • Run elevator up and down shaft, stopping at each floor. Check for accurate landings and smooth stops and starts under all load conditions. • With elevator running, inspect control equipment for excessive arcing, heating of coils, misalignment of relays, contactors or switches. • Inspect hoist motor for smooth operation (no excessive noise or vibration).			
3.1.36	Individually verify each component for compliance with its specified function and operation. Demonstrate that elevators perform in accordance with required type of operation.			
3.1.37	Verify that car and counterweight guide rails are clean, aligned, free of dirt, grease, and rust.			
3.1.38	Verify rope identification per ASME A17.1.			
3.1.39	Verify terminal stopping devices for function and operation.			
3.1.40	Verify emergency terminal stopping devices.			
3.1.41	Verify final terminal stopping device to open power circuit to drive motor.			
3.1.42	Verify elevator hoist way access door, switch, interlocks, and unlocking device.			
3.1.43	Verify speed governor calibration and setting.			
3.1.44	Verify emergency brake for pump unit function and safe controlled operation.			
3.1.45	Verify landing signal equipment at each floor. Verify that, • Hall buttons, register light, and equipment are properly and neatly installed. • Test each button for tactile and functional operation. • Test each lamp for proper illumination. • Test chime for proper sound. • Verify that position indicator matches actual car position.			

3.1.46	Verify elevator emergency operation and signal devices • Elevator intercom system. • Operation of battery powered emergency illumination. • Operation of alarm bell from normal and battery source. • Verify floor numbers in hoist way shaft are observable from restricted opening limit of car doors.			
3.1.47	Verify that all specified signage is in place and is complete.			
3.1.48	Verify function of synthesized voice announcer and that programmed vocabulary is clear, pleasant and complete.			
3.1.49	Verify battery capacity and recharge time on one (1) emergency alarm system.			
3.1.50	Perform the following tests when all elevators in a bank of elevators are complete and ready for pre-functional testing. • Firefighters emergency operation (key operated switches, test for compliance with ASME A17.1 Rule 2.27.3) • Emergency in-car operation (key operated switches and wiring from smoke detector). Test for compliance with ASME A17.1, Rule 2.27.3.3. • Verify function of elevator in response to loss of normal power to facility, and start of emergency generators. • Verify that, following automatic dispatch sequence, one elevator from each group will operate on emergency power.			

END OF CHECKLIST

Functional Test

Project: OGS SOB Building #4 – OGS #45124

Project No. 11123671

SECTION: 142100

ELEVATOR

1. Submittal / Approvals

Submittal: The above equipment and systems integral to them are complete and ready for functional testing. The checklist items are complete and have been checked off only by parties having direct knowledge of the event, as marked below, respective to each responsible contractor. This pre-functional checklist is submitted for approval, subject to an attached list of outstanding items yet to be completed. A Statement of Correction will be submitted upon completion of any outstanding areas. None of the outstanding items preclude safe and reliable functional tests being performed.

_____ _____
Elevator Work Contractor Date

Approvals: This filled-out checklist has been reviewed. Its completion is approved with the exceptions noted below.

_____ _____ _____ _____
Fire Dept. Representative Date ASME QEI-1 Certified Elevator Inspector Date

_____ _____ _____ _____
Commissioning Agent Date Owner's Representative Date

1. Prerequisite Checklist.

a. ____ The following have been started up and startup reports and pre-functional checklists submitted and approved ready for functional testing:
b. ____ All control system functions for this and all interlocking systems are programmed and operable per Contract Documents, including adjustable settings. Instruments and device calibrations completed.
c. ____ All punchlist items for this equipment and related systems have been corrected.
d. ____ These functional test procedures have been reviewed and approved by installing elevator contractor and vendors, and by the certified elevator inspector.
e. ____ Safeties and operating ranges reviewed.
f. ____ Test requirements and sequences of operation have been reviewed, coordinated.
g. ____ Other miscellaneous checks of the pre-functional checklist and startup reports have been completed successfully.

2. Testing Procedures and Record.

Item	Documentation and Testing Requirement(s)	7	7A	7B
2.1	Documentation • Installation and checkout manual and plan • Written copy of all parameters, settings and setpoints • O&M manuals • Performance data • Completed as constructed drawings • Factory test results • Warranty certificate			
2.2	Perform approved manufacturer's prepared test procedure in compliance with ASME 17.1 and specified requirements.			
2.3	Provide and have on site, ready to use, calibrated, and of high quality test instruments and devices so test may be conducted in an orderly and efficient manner. • Properly marked test weights • Digital voltmeters, amp probes • Thermometers and digital thermal measuring equipment. • Tachometers • Megohm meters, meggers, and similar devices. • Vibration meters • Sound meters • Light meters • Stop watches, internal timers • Recording devices • Related testing apparatus, though not mentioned herein. • Communication devices for those present.			
2.4	Notify Fire Department officials of date and time for functional testing. Department official may desire to witness test.			
2.5	Certain items of the pre-functional check list, though, not listed below, may require re-testing or re-verification if requested by certified elevator inspector, commissioning authority, or elevator contractor, or owner. Verify in advance to aid in sequencing testing work.			

3. Elevator Work

ITEM		7	7a	8
3.1	**Visual Inspection**			
3.1	Perform all tests required per ASME A17.1 latest issue Safety Code for Elevators and Escalators. All tests must be witnessed by a qualified elevator inspector (QEI).			
3.2	Perform tests in presence of Director's Representative and QEI. Sign completed ASME Elevator Test Report, submit to OGS, CxA and as called for in specifications. Include documents in O&M manual.			
3.3	Buffer Test: Test oil buffers in accordance with ASME code.			
3.4	Normal Operation Test: Run car, in both up and down direction, by normal operation devices, with full load, stopping at each floor served, in both directions of travel.			
3.5	Speed Test: • Determine actual speed of elevator car in both directions of travel with full load and no load in car. • Determine speed of car by use of tachometer. • Perform speed tests before and after normal operation tests.			
3.6	Limit Switches: Test limit switches (car should not move).			
3.7	Safety Tests: • Perform tests on all safety equipment to determine that they function properly. Tests are to be in accordance with the best practices of the trade. Document each safety device. • Test car safety and governor in			

ITEM		7	7a	8
	accordance with ASME Code. • File off any safety marks on guide rails after tests have been completed.			
3.8	Balance Relationship Between Car and Counterweight: Prior to load safety test, perform a balance test. Add or remove filler weights from counterweight to reestablish original manufacturer's recommended balance relationship.			
3.9	Static Balance Test (Car): Perform a balance test to determine that car is properly balanced on frame. Add or remove weights to underside of platform to reestablish correct balance relationship.			
3.10	Test all items of elevator to assure entire elevator system is operating properly.			
3.11	Before safeties are reset check if: • Any part of the equipment has broken or is out of order. • Ropes are in respective sheave grooves. • The machine brake is applied. • The governor jaws, and car releasing carrier, if any, have been reset to their normal running position. • The car platform is out of level more than 3/8 inches per foot in any direction.			
3.12	Verify that power door operator data plate is secured and contains information called for in ASME A17.1.			
3.13	Check infrared scanning devices (door protective devices) to confirm that device detects penetration of scanned curtain within specified range.			
3.14	Test the following for compliance with specified and required			

ITEM		7	7a	8
	operation. 1. Top of car operating device 2. Stop switch in elevator pit and secondary machine space 3. Automatic leveling; test at each landing to be within tolerance 4. Independent service, selected by key switch 5. Priority capture function 6. Load weighing device 7. Anti-nuisance function 8. Cross cancellation panel, and deactivation of same 9. Motion control function 10. Position selection function 11. Emergency dispatch function 12. Machine room video monitor and printer			
3.15	Individually test each component for compliance with its specified function and operation. Demonstrate that elevators perform in accordance with required type of operation.			
3.16	Test oil buffers per ASME 17.1, Check buffer oil level and verify that there is no leakage.			
3.17	Test terminal stopping devices for function and operation.			
3.18	Test emergency terminal stopping devices.			
3.19	Test final terminal stopping device to open power circuit to drive motor.			
3.20	Test elevator hoist way access door, switch, interlocks, and unlocking device.			
3.21	Test speed governor calibration and setting.			
3.22	Test emergency brake for pump unit function and safe controlled operation.			
3.23	Test landing signal equipment at each floor. Verify:			

ITEM		7	7a	8
	• Hall buttons, register light, and equipment are properly and neatly installed. • Test each button for tactile and functional operation. • Test each lamp for proper illumination. • Test chime for proper sound. • Verify that position indicator matches actual car position.			
3.24	Test elevator emergency operation and signal devices • Elevator intercom system. • Firefighters emergency operation (key operated switches, test for compliance with ASME A17.1 Rule 2.2.7.3) • Emergency in-car operation (key operated switches and wiring from smoke detector). Test for compliance with ASME A17.1, Rule 2.27.3.3. • Operation of battery powered emergency illumination. • Operation of alarm bell from normal and battery source. • Verify floor numbers in hoist way shaft are observable from restricted opening limit of car doors.			

END OF CHECKLIST

Pre-Functional Checklist

Project: OGS SOB Building #4 – OGS #45124

Project No. 11123671

SECTION: 213000

FIRE PUMP

1. Submittal / Approvals

Submittal. The above equipment and systems integral to them are complete and ready for functional testing. This pre-functional checklist is submitted for approval, subject to an attached list of outstanding items yet to be completed. A Statement of Correction will be submitted upon completion of any outstanding areas. None of the outstanding items preclude safe and reliable functional tests being performed.

Fire Protection Contractor	Date	Construction Contractor	Date

Pre-functional checklist items are to be completed as part of startup & initial checkout, preparatory to functional testing.

- This checklist does not take the place of the manufacturer's recommended checkout and startup procedures or report
- If this form is not used for documenting, one of similar rigor shall be used
- Contractors assigned responsibility for sections of the checklist shall be responsible to see that checklist items by their subcontractors are completed and checked off

Approvals. This filled-out checklist has been reviewed. Its completion is approved with the exceptions noted below.

Commissioning Agent	Date	Director's Representative	Date

2. Requested Documentation Submitted

Equipment Tag--->	FP-1	JP-1
Manufacturer's cut sheets		
O&M Manuals		
Performance data		

3. Model Verification

Equipment Tag--->	FP-1	JP-1
Manufacturer		
Model No.		
Serial No.		
Volts / Ph. / Hz		
Amps		
Motor Efficiency		
HP		
RPM		
GPM		
Head-ft		

4. Physical Installation Checks

Check	FP-1	JP-1
General Installation		
Label permanently affixed		
Pumps in place and level		
Factory alignment appears correct		
Field alignment, if required, completed		
Sump is clean and piping free of debris		
Pump lubricated		
Valves installed as per drawing		

Check	FP-1	JP-1
Piping		
Pipe fittings complete and pipes properly supported		
Flow control valve adjusted		
Piping system properly flushed		
Valves properly tagged		
Electrical and Controls		
Power disconnects in place and labeled		
All electric connections tight		
Proper grounding installed for components and unit		
Motor safeties in place and operable		
Control system interlocks hooked up and functional		
All control devices, and wiring complete		

5. Operational Checks

Check	FP-1	JP-1
Pump rotation verified correct		
No unusual noise or vibration		
No leaking apparent around fittings		

END OF CHECKLIST

Functional Test

Project: OGS SOB Building #4 – OGS #45124

Project No. 11123671

SECTION: 213000

FIRE PUMP

1. Submittal / Approvals

Submittal: The equipment and systems integral have undergone functional testing. The checklist items are complete and have been checked off only by parties having direct knowledge of the event, as marked below, respective to each responsible contractor. This functional checklist is submitted for approval, subject to an attached list of outstanding items yet to be completed. A Statement of Correction will be submitted upon completion of any outstanding areas.

Fire Protection Contractor	Date	Construction Contractor	Date

Approvals: This filled-out checklist has been reviewed. Its completion is approved with exceptions noted below.

Commissioning Agent	Date	Director's Representative	Date

1. Prerequisite Checklist

a. ____ The Pre-functional checklist is complete and the unit is ready for functional testing.

b. ____ All A/E punchlist items for this equipment are corrected.

c. ____ Sufficient clearance around equipment for servicing.

d. ____ O&M Manuals provided.

2. Testing Procedures and Record

a. _____ Manufacturer's representative has satisfactorily tested the Fire Pump System.

END OF TEST

Pre-Functional Checklist

Project: OGS SOB Building #4 – OGS #45124

Project No. 11123671

SECTION: 221123

DOMESTIC WATER CIRCULATING PUMP

1. Submittal / Approvals

Submittal. The above equipment and systems integral to them are complete and ready for functional testing. This pre-functional checklist is submitted for approval, subject to an attached list of outstanding items yet to be completed. A Statement of Correction will be submitted upon completion of any outstanding areas. None of the outstanding items preclude safe and reliable functional tests being performed.

Plumbing Contractor	Date	Construction Manager	Date

Pre-functional checklist items are to be completed as part of startup & initial checkout, preparatory to functional testing.

- This checklist does not take the place of the manufacturer's recommended checkout and startup procedures or report
- If this form is not used for documenting, one of similar rigor shall be used
- Contractors assigned responsibility for sections of the checklist shall be responsible to see that checklist items by their subcontractors are completed and checked off

Approvals. This filled-out checklist has been reviewed. Its completion is approved with the exceptions noted below.

Commissioning Authority	Date	Owner's Representative	Date

2. Model verification

Equip Tag->	CP-1A	CP-1B
Manufacturer		
Model No.		
Volts / Ph. / Hz		
Amps		
HP		
RPM		

3. Physical Installation Check

	Equip Tag->	CP – 1A	CP-1B
1	Aquastat provided		
2	Mounting/support system and vibration isolation		
3	Freedom of rotation		
4	Lubrication		
5	Disconnect switch (tested)		
6	Pressure gauge installed		
7	Shut off valves installed		
8	Balance valve and shut off valve installed		
9	Unions before & after pumps		
10	Pump labeled		
11	Field alignment complete and installed on horizontal piping run		

12	Temperature gauges installed		
13	Piping complete		
14	Piping insulated		

4. Operational Checks

	Equip Tag->	**CP-1A**	**CP-1B**
1	Direction of rotation		
2	Electrical interlocks - start / stop		
3	Vibration & noise level acceptable		

END OF CHECKLIST

Project: OGS SOB Building #4 – OGS #45124

Project No. 11123671

SECTION: 221123

DOMESTIC WATER CIRCULATING PUMP

1. Submittal / Approvals

Submittal: The equipment and systems integral have undergone functional testing. The checklist items are complete and have been checked off only by parties having direct knowledge of the event, as marked below, respective to each responsible contractor. This functional checklist is submitted for approval, subject to an attached list of outstanding items yet to be completed. A Statement of Correction will be submitted upon completion of any outstanding areas.

_____	_____	_____	_____
Plumbing Contractor	Date	Construction Manager	Date

Approvals: This filled-out checklist has been reviewed. Its completion is approved with exceptions noted below.

_____	_____	_____	_____
Commissioning Authority	Date	Owner's Representative	Date

1. Prerequisite Checklist

a. ____ The following have been started up and pre-functional checklists submitted and approved ready for functional testing

b. ____ All control system functions for this systems are programmed and operable per Contract Documents

c. ____ ll A/E punchlist items for this equipment corrected

d. ____ These functional test procedures reviewed and approved by installing contractor

e. ____ The Pre-functional checklist is complete and the unit is ready for functional testing

f. ____ Sufficient clearance around equipment for servicing

2. Testing Procedures and Record

No.	Testing Procedure	Expected Response	Pass
1	**CP – 1A**		
2	Pump will maintain domestic water supply loop setpoint (____°F) for the general building area		
3	Provide On / Off switch Hand control from a manual switch	Pump will turn On/Off	
4	Signal provided to BMS of pump status		

No.	Testing Procedure	Expected Response	Pass
1	**CP-1B**		
2	Pump will maintain domestic water supply loop setpoint (____°F) for the general building area		
3	Provide On / Off switch Hand control from a manual switch	Pump will turn On/Off	
4	Signal provided to BMS of pump status		

END OF TEST

Pre-Functional Checklist

Project: OGS SOB Building #4 – OGS #45124

Project No. 11123671

SECTION: 230923

DIRECT DIGITAL BUILDING CONTROL SYSTEM

1. Submittal / Approvals

Submittal The above equipment and systems integral to them are complete and ready for functional testing. This pre-functional checklist is submitted for approval, subject to an attached list of outstanding items yet to be completed. A Statement of Correction will be submitted upon completion of any outstanding areas. None of the outstanding items preclude safe and reliable functional tests being performed.

Pre-functional checklist items are to be completed as part of startup & initial checkout, preparatory to functional testing.

- This checklist does not take the place of the manufacturer's recommended checkout and startup procedures or report.
- If this form is not used for documenting, one of similar rigor shall be used.
- Contractors assigned responsibility for sections of the checklist shall be responsible to see that checklist items by their subcontractors are completed and checked off.

Approvals: This filled-out checklist has been reviewed and its completion is approved.

Commissioning Agent	Date	Director's Representative	Date

2. Documentation

Equipment Tag--->	
Manufacturer's cut sheets	
O&M Manual	
Performance data	

3. Model verification

Manufacturer	
Model No.	
Serial No.	
CPU	
Monitor	

4. Initial Setup and Checkout

Check	
General appearance good, no apparent damage	
Equipment labels affixed	
Layout and location of control panels matches drawings	
Areas or equipment panels serve clear in control drawings	
Wiring labeled inside panels (to controlled components)	
Controlled components labeled/tagged	
BAS connection made to labeled terminal(s) as shown on drawings	
Shielded wiring used on electronic sensors	
Provide graphics for each major piece of equipment and floor plans	
110 volt AC power available to panel	
Panels properly grounded	
Environmental conditions according to manufacturer’s requirements	
Date and time correct	

END OF CHECKLIST

Functional Test

Project: OGS SOB Building #4 – OGS #45124

Project No. 11123671

SECTION: 230923

DIRECT DIGITAL BUILDING CONTROL SYSTEM

1. Submittal / Approvals

Submittal: The equipment and systems integral have undergone functional testing. This functional checklist is submitted for approval, subject to an attached list of outstanding items yet to be completed. A Statement of Correction will be submitted upon completion of any outstanding areas.

Approvals. This filled-out checklist has been reviewed. Its completion is approved with the exceptions noted below.

Commissioning Agent	Date	Director's Representative	Date

1. Prerequisite Checklist

_____ Building Automation Systems Pre-Functional Checklist has been completed and signed off

2. Procedure and Record

_____ Copy of Building Automation Systems approved submittal attached

3. Testing Procedure

Check	
Operator graphical interface is installed and functional.	
All graphics screens are viewable.	
Operator graphical interface is able to monitor and supervise control of all points.	
Operator graphical interface allows operator to add new points and edit the system database.	
Operator graphical interface allows operator to enter programmed start/stop time schedule.	
Operator graphical interface allows operator to view all alarms and messages.	
Operator graphical interface allows operator to modify existing control programs in all control units.	
Operator graphical interface allows operator to upload/download programs, databases, etc.	

END OF TEST

SECTION 230993

SEQUENCE OF OPERATIONS

PART 1 - GENERAL

1.01 RELATED DOCUMENTS

A. Drawings and general provisions of the Contract, including General and Supplementary Conditions and Division 1 Specification Sections, apply to this Section.

1.02 SUMMARY

A. This Section includes control sequences for HVAC systems, subsystems and equipment.

1. Metering/trending
2. Chilled water System, low and high temperature
3. Heating hot water System
4. Air handling unit system with total energy recovery wheel and passive dehumidification wheel (AHU-1 to 3)
5. Air handling unit system with total energy recovery wheel (AHU-5)
6. Chilled beams and Variable Volume Box (VAV)
7. Demand controlled ventilation
8. Lobby
9. Training Room
10. Main electrical switchroom
11. Emergency switchroom, IT/Electrical closets
12. Elevator machine rooms
13. Unit heaters
14. Finned tube radiators
15. Command center – VRF
16. Miscellaneous exhaust fans

1.03 DEFINITIONS

A. AHU: Air Handling Unit.

B. AI: Analog Input.

C. AO: Analog output.

D. BMS: Building Management System.

E. CAV: Constant Air Volume.

F. CFM: Cubic Feet per Minute.

G. DDC: Direct-digital controls.

H. DI: Digital Input.

I. DO: Digital Output.

J. FAS: Fire Alarm System.

K. HVAC: Heating, Ventilating and Air Conditioning.

L. MER: Mechanical Equipment Room.

M. PDT: Pressure Differential Transmitter

N. PID: Proportional Integral Derivative.

O. VAV: Variable air volume.

P. VFD: Variable Frequency Drive.

1.04 GENERAL

A. All safety devices shall be hardwired to the starter and shall have a second contact for monitoring via the BMS.

B. A failure alarm, as included in the point list, shall indicate the type of equipment that has failed (pump, fan, valve, etc.) including the specific designation of the piece of equipment (e.g., supply fan SF-1). It is not acceptable to generate a general failure alarm. A failure alarm shall be setup for each motor being commanded and monitored by the BMS.

C. Alarming devices such as freezestats, pressure safeties, etc. shall be wired so the contacts open in the alarm condition. All alarm points shall be annunciated at the BMS audibly and visually. All alarm points associated with varying values shall be provided with adjustable alarm limits.

D. All setpoints including setpoints internal to control algorithms shall be adjustable from all BMS operator interfaces. All commands shall be overrideable from all BMS operator

interfaces. All control points shall be adjustable or overrideable from the same graphic page that displays the points.

E. All points for a specific mechanical system shall be connected to and controlled by the same DDC controller unless otherwise specified. For example, it is not acceptable to control a supply fan with one (1) DDC controller and to have the remote static pressure sensor connected to a different controller.

F. All points required by the sequence of operation including, but not limited to, the points listed in the sequences of operation below, as well as all of the points' associated values, shall be connected to the BMS and available to the BMS operators on all operator workstations and all operator interface devices as part of a graphical display that depicts the mechanical system controlled.

G. All valves, dampers, controllers, control devices, etc. exposed to outside air conditions shall be specifically designed for outside air conditions including, but not limited to, NEMA 4X enclosures, weatherproof enclosures and all other weather precautions recommended by the manufacturer.

H. The BMS shall monitor a contact provided by FA for combination fire smoke damper at return opening at AHU as indicated on the drawings.

I. All alarms associated with equipment that is disabled shall be inhibited.

J. All initial field settings applied shall be saved as the default values. These values shall be downloaded to the controller such that they are the default value if the controller loses power. A printed copy shall also be provided to the Director's Representative as part of the O & M manuals.

K. Motors shall only be controlled by the BMS when the starter is in the auto position or the VFD is in the inverter position.

L. Freezestats, pressure safeties, interlocked dampers, etc. shall be wired to shutdown motors when the starter/VFD is in both the hand and auto/inverter positions. It shall not be possible to override these or any other safety devices or any fire alarm system control functions, except in the case of an engineered smoke control system in which case freeze protection safeties shall be overridden.

M. All supply, return, and exhaust fans shall be hardwired interlocked with their respective intake and discharge dampers such that when a fan is called to start, the fan shall be prevented from starting until its intake or discharge damper is fully open. A damper limit switch shall be hardwired to the fan starter/VFD to allow the fan to start when the damper is fully open.

N. Where fans and dampers are to be hardwire interlocked, provide hardwire interlocks between the motor terminal strip and dampers such that the damper shall be driven open when the motor is required to start. Motor start-up shall not occur until the damper end switch indicates the damper is in the full open position. Where fans and dampers are hardwire interlocked, the interlocks shall apply in both the "hand" and "auto/inverter" positions of the starter or VFD.

O. Refer to the Control Diagrams included in the mechanical drawings for additional information to facilitate the interpretation of the sequences of operation as defined herein. The Control Diagrams are for reference only. All points included herein or required by the sequence of operation are required regardless of whether they are shown in the Control Diagrams.

P. Automatic restart of fans after an equipment or life safety system shutdown trip shall be software prohibited through the deenergization of the remote start/stop contact. Fan restart shall be manually initiated by the operator either locally or remotely through the DDC system operator workstation

1.05 OUTSIDE AIR MONITORING

A. Provide an outside air monitoring station for building 4. Each outside air station shall monitor outside air temperature, outside air humidity and outside air carbon dioxide level. The outside air monitoring stations shall be installed on the roof on the north side of penthouse, away from all intakes and exhausts.

B. Outside air temperature and humidity shall be displayed on BMS graphic. Outside air carbon dioxide and enthalpy shall be displayed on applicable BMS graphics.

1.06 METERING/TRENDING

A. Trending of Air Economizer Modes

1. The BMS shall contain a trending program which shall monitor each outdoor air economizer air conditioning system to determine if the system is operating in the air economizer mode.

2. The BMS shall contain all required trending software program to trend the daily, weekly, monthly and yearly hours of outdoor air economizer operation. The BMS shall be furnished with the above-listed trend programs installed, set up and operational. The BMS shall be programmed to automatically issue a report at a frequency rate determined by the Director’s Representative.

B. Trending of Electric Meters

1. The BMS shall contain a trending program which shall monitor each electric meter.

2. The BMS shall contain all required trending software program to trend the daily, weekly, monthly and yearly consumption of each electric meter in terms of usage and demand. The BMS shall be furnished with the above-listed trend programs installed, set up and operational. The BMS shall be programmed to automatically issue a report at a frequency rate determined by the Director’s Representative.

3. Refer to electrical plans for locations of all required meters.

C. Trending of HVAC Water Flow Meters

1. The BMS shall contain a trending program which shall monitor each water flow meter. BTU shall be calculated.

2. The BMS shall contain all required trending software program to trend the daily, weekly, monthly and yearly consumption of each water meter in terms of flow and energy. The BMS shall be furnished with the above-listed trend programs installed, set up and operational. The BMS shall be programmed to automatically issue a report at a frequency rate determined by the Director's Representative.

3. Refer to mechanical plans for locations of all required meters.

D. Trending of Main Steam Meter

1. Provide a steam meter in the main steam line entering each building. The steam meter shall provide an input to The BMS. The BMS shall contain a trending program which shall monitor main steam meter.

2. The BMS shall contain all required trending software program to trend the daily, weekly, monthly and yearly consumption of the meter. The BMS shall be furnished with the above-listed trend programs installed, set up and operational. The BMS shall be programmed to automatically issue a report at a frequency rate determined by the Director's Representative.

E. Trending of Main Domestic Water Meter

1. The Plumbing Contractor shall provide a water meter in the main domestic water line entering each building. The water meter shall provide an input to The BMS. The BMS shall contain a trending program which shall monitor main water meter.

2. The BMS shall contain all required trending software program to trend the daily, weekly, monthly and yearly consumption of the meter. The BMS shall be furnished with the above-listed trend programs installed, set up and operational. The BMS shall be programmed to automatically issue a report at a frequency rate determined by the Director's Representative.

F. Trending of Air Side Duct Static Pressure Transmitters, Supply and Return Fan System Air Flow Rates and Outdoor Air Flow Rates

1. 1. The BMS shall contain a trending program which shall monitor all:

   a. Duct static pressure transmitters.

   b. Supply fan air flow measuring stations.

   c. Return fan air flow measuring stations.

   d. Outdoor air flow measuring stations.

2. The BMS shall contain all required trending software programs to trend each of the above variables based on a daily, weekly, monthly and yearly schedule. The BMS shall be furnished with the above-listed trend programs installed, set up and operational. The BMS shall be programmed to automatically issue a report at a frequency rate determined by the Director's Representative.

1.07 CHILLED WATER SYSTEM

A. General

1. Campus chilled water is available from mid April to mid November, at 44°F supply, 56°F return, manual open/close valves at the building 4 entry. Two heat exchangers, each at 100% capacity arranged as duty/standby provide break between the campus chilled water loop and building chilled water loop.

2. Building 4 has two (2) secondary chilled water systems. Low temperature system, at 46°F supply, 58°F return, serves AHUs and FCUs. High temperature system, at 57°F supply, 61°F return, serves chilled beams. The high temperature chilled water system is set by a mixing valve, mixing return chilled water with supply to achieve the set supply temperature at 57°F.

3. A roof mounted air cooled chiller provides chilled water via a heat exchanger from mid November to mid April for chilled beam system. Automatic changeover valves shown on the drawing shall receive open/close command via BMS to divert chilled beam water to the corresponding cooling source available at the time. The air cooled chiller system shall be enabled and operate at set temperatures before the changeover from campus chilled water system. The air cooled chiller system shall be disabled after the campus chilled water system is available and operate at set temperatures.

4. Alarms: Alarm shall be generated at BMS if water temperature are ±2°F(adj.) of its setpoint.

5. Valve Monitoring

   a. Individual open and close limit switches on each two-position valve shall provide positive valve position open and close indication to the BMS.

   b. The BMS shall monitor the automatic control valve operation and indicate an alarm upon valve failure. When the valve status does not equal BMS command after a time delay, a "valve failure" alarm shall be generated at the front end.

6. Pumps

   a. The differential pressure sensor controlling a pump or set of pumps shall be wired directly to the same control panel controlling the speed of the pumps.

B. System Enable/Disable

1. The campus chilled water system shall be enabled and disabled by manual turn on/off the isolation valves.

2. When the system is enabled, the valve on the duty heat exchanger shall open. When the valve is proven open, the lead chilled water pumps for both high and low temperature chilled water systems shall start unloaded and slowly ramp up to speed.

3. When the system is disabled, the low temperature chilled water pump shall stop and all automatic control and isolation valves shall close, while the high temperature chilled water pump shall continue to operate via the heat exchanger connected to the air cooled chiller.

4. The high temperature chilled water system shall run continuously during the changeover period. The air cooled chiller system shall be enabled and operate at set temperatures before the changeover from campus chilled water system in November. The air cooled chiller system shall be disabled after the campus chilled water system is available and operate at set temperatures in April.

C. 3-Way Mixing Temperature Control Valve – High temperature chilled water loop serving chilled beams

1. The 3-way mixing control valve shall modulate as necessary to maintain the chilled water supply temperature setpoint at 57 ºF (adj.).

2. Chilled Beam Loop Temperature Reset

   a. The BMS shall monitor each space calculated dew point temperature and select the highest reading. The program shall reset the chilled beam supply water temperature setpoint such that the supply temperature is minimum 1 ºF (adj.) above the highest space dew point temperature. On sensing any space dew point temperature which is within ±2°F of the chilled water supply temperature, an alarm shall be activated at the workstation. The setpoint shall be programmed with user adjustable high and low limits.

   b. Alarm shall be generated at BMS if the supply water temperature is above 59ºF (adj.).

D. Chilled Water Pump Control – Typical for low temperature chilled water (46/58 ºF) serving AHUs & FCUs and high temperature chilled water (57/61 ºF) serving Chilled Beams

1. The BMS shall modulate the speed of the lead chilled water pump to maintain the chilled water differential pressure setpoint. The differential pressure setpoint shall start at a preset value determined during balancing. The differential pressure setpoint shall be reset based on chilled water control valve position. If no control valve in the loop served by the pumps is greater than 80% (adj.) open, decrease the differential pressure setpoint until at least one valve is greater than 90% (adj.) open. If any valve is greater than 95% (adj.) open, increase the differential pressure setpoint until all valves are below 95% (adj.) open. Time delays shall be present between setpoint adjustments to allow the

system to stabilize. The setpoint shall not be reset more than once every 10 minutes (adj.).

2. If only one chilled water pump is operating and it is at minimum speed, the differential pressure bypass valve shall open as required to maintain the system differential pressure. The bypass valve shall remain closed whenever the pump is above minimum speed. The bypass valve shall be fully closed before the pump speed increases above minimum.

3. After a pump is commanded on, there shall be a 30 second (adj.) delay before a pump alarm is issued. During normal operation the BMS shall wait 30 seconds (adj.) to monitor the pump status change before indicating a pump failure alarm. Upon indication of a pump failure alarm, the failed pump shall be commanded off and the standby pump shall be commanded on.

4. The pumps shall run in a lead/lag configuration. The BMS shall totalize run time of each pump and rotate the lead pump to equalize runtime (adj.).

E. Air Cooled Chillers (including chiller and fluid cooler modules)

1. System Enable/Disable shall be via BMS command manually, before campus chilled water to be disconnected.

2. Microprocessor controller shall be fully interfaced to BMS via BACnet card furnished by equipment manufacturers, providing compressor and pump information and chilled water temperatures.

3. Once the chiller is called to run, it shall provide chilled water at 52 ºF supply (adj.).

4. Common alarm shall be generated at BMS

F. Heat Exchanger for High Temperature Chilled Water System Control

1. Once the chiller is commanded to run via BMS by BMS staff, and operate at set temperature, the heat exchanger automatic isolation valves (changeover cooling source) shall open via BMS command, by BMS staff.

2. When the chiller is disabled, heat exchange isolation valve shall close, via BMS command, by BMS staff.

G. Campus and Building Chilled Water Heat Exchanger Control

1. Two heat exchangers, each at 100% capacity in a duty/standby configuration under design condition, provide break between the campus chilled water loop and building chilled water loop. BMS shall automatically rotate and index the designation of “duty” and “standby” heat exchanger.

2. When the campus chilled water system is enabled, the automatic isolation valve on the duty heat exchanger shall open. When the campus chilled water system is disabled, the isolation valve shall close.

3. Should the chilled water supply temperature be greater than 3 ºF (adj.). (adj) above setpoint for more than 20 minutes (adj) the standby heat exchanger shall be enabled.

4. If two heat exchangers are in operation and the chilled water load falls below the maximum capacity of one heat exchanger, the second heat exchanger shall be disabled. The heat exchanger control valves and isolation valve shall close and remain closed.

1.08 HOT WATER SYSTEM

A. Campus steam is available at 60 psig in summer and 95 psig in winter. It shall be reduced to 15 psig for domestic hot water systems and heating hot water system via heat exchangers.

B. Building 4 uses hot water for heating systems, at 190°F supply, 170°F return, serves AHUs, FCUs, FTRs and unit heaters.

C. Alarms: Alarm shall be generated at BMS if water temperature are ±5°F(adj.) of its setpoint.

D. General

1. Valve Monitoring

a. Individual open and close limit switches on each two-position valve shall provide positive valve position open and close indication to the BMS.

b. The BMS shall monitor the automatic control valve operation and indicate an alarm upon valve failure. When the valve status does not equal BMS command after a time delay, a “valve failure” alarm shall be generated at the front end.

2. Pumps

a. The differential pressure sensor controlling a pump or set of pumps shall be wired directly to the same control panel controlling the speed of the pumps.

E. Steam Pressure Reducing Valves (PRV)

1. The BMS shall monitor pressure for each stage of steam PRV, and generate an alarm if the pressure is 5 psig higher than its setpoint.

2. The BMS shall monitor a common alarm contact from the air compressor serving the PRVs.

F. Condensate Pumps (steam)

1. The BMS shall monitor the status (via current switch) and common alarm (via contact from manufacturer provided controls) for each condensate pump.

G. System Start/Stop

1. The system shall be enabled based upon system demand or manual command.

2. When the system is enabled, the lead heat exchanger isolation valves shall open. When the valve proves open, the lead hot water pump shall start unloaded and slowly ramp up to speed.

3. When the system is disabled, hot water pumps shall stop and all heat exchanger control and isolation valves shall close.

H. Steam/Hot Water Heat Exchanger Control

1. Each heat exchanger shall be sized at 110% of total load in a duty/standby configuration under design condition. Each heat exchange shall have 1/3 and 2/3 steam control valves.

2. During heating season, the automatic isolation valve on the duty heat exchanger shall remain open. Hot water pump shall run only when the isolation valve is proven open, then the steam control valves shall be allowed to operate. The BMS shall control the lead heat exchanger steam valves to maintain the hot water supply water temperature setpoint.

3. The BMS shall modulate the 1/3 valve initially to maintain the hot water supply temperature setpoint. If setpoint cannot be maintained when 1/3 valve is fully open, BMS shall close the 1/3 valve fully and modulate 2/3 valve to maintain hot water supply setpoint. If setpoint cannot be maintained when 2/3 valve is fully open, BMS shall modulate 1/3 valve to open to maintain hot water supply setpoint. All valves shall modulate in unison to maintain the hot water supply temperature setpoint.

4. If the hot water supply temperature setpoint cannot be met with the duty heat exchanger in 100% operation, the second heat exchanger isolation valve shall open and when the valve proves open, the second heat exchanger shall be enabled. When enabled, the second heat exchanger steam control valves shall modulate necessary to maintain the hot water supply temperature setpoint.

5. If two heat exchangers are in operation and the hot water load falls below the maximum capacity of one heat exchanger, the second heat exchanger shall be disabled. The heat exchanger control valves and isolation valve shall close and remain closed.

6. The heat exchangers shall run in a duty/standby configuration. The BMS shall totalize operation time of each heat exchanger and rotate the duty heat exchanger to equalize operation time (adj.).

7. If an operating heat exchanger fails, the heat exchanger shall be disabled and an alarm shall be generated at the BMS. The next heat exchanger in sequence shall be enabled to operate in place of the failed heat exchanger. A heat exchanger shall be considered failed if any of the following occur:

   a. An isolation valve fails to reach the commanded position after a sufficient time delay for full travel.

   b. The heat exchanger secondary hot water temperature is 5 °F (adj.) above or below setpoint.

8. Hot water setpoint shall linearly reset based on outdoor air temperature. Provide adjustable reset schedule as follows:

   a. OAT: 20 °F (adj.) or lower HW Setpoint: 190 °F (adj.)

   b. OAT: 60 °F (adj.) or lower HW Setpoint: 140 °F (adj.)

I. Hot Water Pump Control

1. The BMS shall modulate the speed of the lead hot water pump to maintain the hot water differential pressure setpoint. The differential pressure setpoint shall start at a preset value determined during balancing. The differential pressure setpoint shall be reset based on hot water control valve position. If no control valve in the loop served by the pumps is greater than 80% (adj.) open, decrease the differential pressure setpoint until at least one valve is greater than 90% (adj.) open. If any valve is greater than 95% (adj.) open, increase the differential pressure setpoint until all valves are below 95% (adj.) open. Time delays shall be present between setpoint adjustments to allow the system to stabilize. The setpoint shall not be reset more than once every 10 minutes (adj.).

2. If only one hot water pump is operating and it is at minimum speed, the differential pressure bypass valve shall open as required to maintain the system differential pressure. The bypass valve shall remain closed whenever the pump is above minimum speed. The bypass valve shall be fully closed before the pump speed increases above minimum.

3. After a pump is commanded on, there shall be a 30 second (adj.) delay before a pump alarm is issued. During normal operation the BMS shall wait 30 seconds (adj.) to monitor the pump status change before indicating a pump failure alarm. Upon indication of a pump failure alarm, the failed pump shall be commanded off and the standby pump shall be commanded on.

4. The pumps shall run in a lead/lag configuration. The BMS shall totalize run time of each pump and rotate the lead pump to equalize runtime (adj.).

1.09 AIR HANDLING UNIT EQUIPPED WITH TOTAL ENERGY RECOVERY AND PASSIVE DEHUMIDIFICATION WHEEL (AHU-1,2,3)

A. AHU-1,2,3 serve both internal and external zones on multiple floors. They shall not be scheduled off. Their operation shall be based on the demand at setpoint.

B. Furnish and install AHUs control system with the following scope of work associated with the units:

1. Equipment DDC controller

2. Furnish, install and wire all sensors, safties as shown on the control diagrams.

3. Hardwire interlock all associated smoke dampers to the unit fan VFDs.

4. All information, points, alarms, etc available via the interface shall be displayed on the BMS operator workstation. All setpoints and control points shall also be adjustable via the BMS operator workstation.

C. Safeties

1. Supply dampers shall be hardwire interlocked with the supply fan and return dampers shall be interlocked with the return fan.

2. A smoke dampers directly upstream of a fan shall be hardwire interlocked to the associated fan starter such that the fan cannot start until the dampers prove open. The BMS shall monitor the open/closed position of each smoke dampers.

3. High/low static pressure for supply/return fans, with manual reset

4. Low temperature switch (Freezestat), with manual reset

5. All safeties shall generate alarm at BMS.

D. Sequence of Operation: General

1. The unit is to be commanded occupied or unoccupied by BMS or the unit DDC controller.

E. System Off: All valves, dampers shall be in their normal position, except the heating control valve and freeze protection pump which shall modulate and rum to maintain a plenum temperature of minimum 50 °F. The AHU associated unit mounted smoke isolation dampers shall be closed.

F. Startup Sequence: When the system is commanded on, the following sequences occur;

1. The AHU startup shall be as scheduled or via BMS command.

2. The smoke dampers at inlet of the unit shall start to open to full.

3. The exhaust, outside air dampers shall slowly open.

4. After an adjustable time delay and the damper position switches at the unit prove all damper positions, the supply fan and return fan shall start in unison and slowly ramp up. Supply fans shall modulate to maintain the duct mounted air pressure setpoint (adj.) sensed by PDT.

5. The supply, return fan and outside air CFM shall be monitored via air flow measure stations. Return air shall be calculated by BMS: supply airflow minus associated exhaust air systems.

G. Normal Occupied Mode: The unit shall provide discharge air dew point control, economizer control, and discharge air temperature control.

1. Dew Point Control shall be used when outside air dew point is above discharge dew point 44°F (adj.).

    a. Enthalpy wheel speed at 20 RPM

    b. Passive wheel speed at 0.25 RPM

    c. Wheel bypass dampers closed

    d. Supply air heating valve closed

    e. Cooling coil valve modulates to meet supply air dew point set point 44°F (adj.) and maximum supply air temperature set point of 60°F (adj.).

    f. Return heating coil valve to modulate to fully open if supply air dew point is 5°F above set point to boost dehumidification

    g. Supply fan to run on static pressure set point

    h. Exhaust fan to run based on CFM feedback from supply air duct

2. Economizer control shall be used when the outdoor air dew point is equal to or below the supply air dew point set point and the outdoor air temperature is 35°F (adj.) and higher.

    a. Enthalpy wheel speed to be 0.25 RPM

    b. Passive wheel speed to be 0.25 RPM

    c. Both wheel bypass dampers open

    d. Supply air heating valve to modulate to maintain 60°F discharge set point (adj.)

    e. Cooling coil valve closed

    f. Return heating coil valve closed

    g. Supply fan to run on static pressure set point

    h. Exhaust fan to run based on CFM feedback from supply air duct.

3. Discharge air temperature control shall be used when the outdoor air temperature is below 35°F (adj.)

    a. Enthalpy wheel speed to be reset with VFD to meet 60°F leaving air temperature set point (adj.)

    b. Passive wheel speed to be 0.25 RPM

    c. Wheel by pass dampers closed on enthalpy wheel

    d. Wheel by pass dampers open on passive wheel

e. Supply air heating valve modules as second stage heat to maintain 60°F leaving air set point (adj.).

f. Cooling coil valve closed

g. Command heating coil control valve to fully open if supply air temperature drops below 60°F and if wheel frosting occurs on enthalpy wheel.

h. Supply fan to run on static pressure set point

i. Exhaust fan to run based on CFM feedback from supply air duct.

j. Unit to shut down when supply air temperature is below 40°F (adj.) for more than 5 minutes (adj.).

H. Scheduled Unoccupied Cooling Mode: The unit shall provide discharge air dew point control, and discharge air temperature control to maintain room setback set point.

1. Unoccupied dehumidification Mode (cooling):

a. Return and supply dampers open. Exhaust air and outside air dampers closed. Recirculating bypass damper open. Exhaust fan off. Supply fan on.

b. VAV serving internal zones closed. VAV serving external zones shall open. VAV to modulate to meet room set point, after the zone chilled water valve closed.

c. Supply fan to modulate to maintain duct static pressure

d. Passive wheel to rotate to maintain lowest possible leaving air dew point

e. Chilled water valve to modulate to meet discharge dew point.

f. Return air heating valve to modulate to fully open if supply air dew point is 5°F above set point to boost dehumidification

g. Space dew points shall maintain under 55°F in unoccupied mode.

I. Scheduled Unoccupied Heating Mode:

a. All dampers closed. All fans off. No ventilation required during unoccupied

J. Filter Monitoring

1. An alarm shall be generated when the pressure drop across filter is higher than the set point, as per equipment schedule. Replace filter.

K. Freeze Protection Pump

1. The freeze protection pump shall be connected to and controlled by the associated AHU controller.

2. The freeze protection pump shall run whenever the outside air temperature falls below 38°F (adj.).

3. The BMS shall monitor each pump via a current sensor. There shall be a 30 second (adj.) delay before a pump alarm is issued.

1.10 AIR HANDLING UNIT EQUIPPED WITH TOTAL ENERGY RECOVERY WHEEL (AHU-5)

A. AHU-5 provides outside air to the air conditioning units serving The Command Center. It shall run only during occupied hours, off unoccupied hours.

B. Furnish and install AHU control system with the following scope of work associated with the units:

1. Equipment DDC controller

2. Furnish, install and wire all sensors, safeties as shown on the control diagrams.

3. Provide interface between the unit DDC controllers and BMS via BACnet/IP protocol. All information, points, alarms, etc available via the interface shall be displayed on the BMS operator workstation. All setpoints and control points shall also be adjustable via the BMS operator workstation.

C. Safeties

1. Supply dampers shall be hardwire interlocked with the supply fan and return dampers shall be interlocked with the return fan.

2. High/low static pressure for supply/return fans, with manual reset

3. Low temperature switch (Freezestat), with manual reset

4. All safeties shall generate alarm at BMS.

D. Sequence of Operation: General

1. The unit is to be commanded occupied or unoccupied by BMS or the unit DDC controller.

E. System Off: All dampers shall be in their normal position. All fans shall be off.

F. Startup Sequence: When the system is commanded on, the following sequences occur;

1. The exhaust, outside air dampers shall slowly open.

2. After an adjustable time delay and the damper position switches at the unit prove all damper positions, the supply fan and return fan shall start in unison and slowly ramp up.

Supply fans shall modulate to maintain the duct mounted air pressure setpoint (adj.) sensed by PDT.

3. The supply, return fan and outside air CFM shall be monitored via air flow measure stations. Return air shall be calculated by BMS: supply airflow minus associated exhaust air systems.

G. Normal Occupied Mode: The unit shall achieve the maximum energy exchange efficiency and provide the lowest possible discharge air temperature in cooling mode, and highest temperature in heating mode.

1. Cooling mode: when hot water heating valves serving the same zones are not open. Lowest possible discharge temperature shall be provided.

   a. Enthalpy wheel speed at 20 RPM

   b. Wheel bypass dampers closed

   c. Supply fan to run on static pressure set point

   d. Exhaust fan to run based on CFM feedback from supply air duct

2. Economizer control shall be used when the outdoor air dew point is equal to or below the supply air dew point set point and the outdoor air temperature is 35°F (adj.) and higher.

   a. Enthalpy wheel speed to be 0.25 RPM

   b. Wheel bypass dampers open

   c. Supply fan to run on static pressure set point

   d. Exhaust fan to run based on CFM feedback from supply air duct.

3. Heating mode: when hot water heating valves serving the same zones are open. Highest possible discharge temperature shall be provided.

   a. Enthalpy wheel speed to modulate up to 20 RPM to provide the highest possible discharge air temperature

   b. Wheel bypass dampers closed on enthalpy wheel

   c. Supply air heating valve modules as second stage heat to maintain 60°F leaving air set point (adj.).

   d. Supply fan to run on static pressure set point

   e. Exhaust fan to run based on CFM feedback from supply air duct.

   f. Unit to shut down when supply air temperature is below 40°F (adj.) for more than 5 minutes (adj.).

H. Scheduled Unoccupied Cooling Mode: All dampers shall be in their normal position. All fans shall be off.

1. Filter Monitoring

2. An alarm shall be generated when the pressure drop across filter is higher than the set point, as per equipment schedule. Replace filter.

1.11 CHILLED BEAMS AND VAV CONTROLS (COOLING)

A. General:

1. Occupied hours set point: Summer design 75°F 50%RH, Winter 72° heating. Cooling between 76°F to 73°F, heating between 72°F to 70°F. Unoccupied hours set point: summer 84°F, winter 60°F. All set points shall be adjustable.

2. Occupied hours space: Chilled water shall modulate when space temperature between 76°F (adj.) to 73°F (adj.) in the summer, and hot water shall modulate when space temperature between 72°F (adj.) to 70°F (adj.) in the winter.

3. A condensate sensor shall be provided to the chilled water supply line in each zone. Upon the activation of the condensate sensor, the chilled water control valve serving the zone shall be closed. An alarm shall be generated at BMS.

4. When space temperature is ±5°F (adj.) of set point for more than 10 minutes (adj.), an alarm shall be generated at BMS.

B. Chilled beams serving internal zones – All spaces:

1. Unoccupied Hours: Both VAV and chilled water control valve shall be off.

2. Occupied Hours: VAV at design CFM, chilled water control valve modulating to maintain space temperature.

3. A condensate sensor shall be provided to the chilled water supply line in each zone. Upon the activation of the condensate sensor, the chilled water control valve serving the zone shall be closed. An alarm shall be generated at BMS.

C. Chilled beams serving external zones - Office Space:

1. Occupied Hours: Primary supply air via VAV shall remain the same. The chilled water zone control valve shall modulate from design GPM to close to maintain the zone space temperature below the set point 76°F (adj.).

2. Unoccupied Hours: The chilled water zone control valve shall modulate from design GPM to close to maintain the zone space temperature below the set point, while zone VAV at design CFM. When chilled water zone control valve is closed, and zone space

temperature is still below set point, primary supply air shall modulate from design CFM to close to maintain the zone space temperature below the set point 84°F (adj.).

D. Chilled beams serving external zones - high density occupied space (Conference Rooms, breakrooms):

1. Occupied Hours: Zone VAV shall start at minimum CFM, chilled water zone control valve shall modulate to open to the design GPM to maintain the zone space temperature below the set point. When chilled water is at design GPM, zone space temperature is above set point, zone VAV shall modulate to open, up to the design CFM.

2. Unoccupied Hours: The chilled water zone control valve shall modulate from design GPM to close to maintain the zone space temperature below the set point, while primary supply air at design CFM. When chilled water zone control valve is closed, and zone space temperature is still below set point, primary supply air shall modulate to close.

1.12 DEMAND VENTILATION – Conference Rooms, Breakrooms, Training Room

A. When space CO2 sensor is above its set point, VAV shall modulate to open to the design CFM. If VAV is fully open for 10 minutes (adj.) and CO2 level still above set point, an alarm shall be generated at BMS.

1.13 LOBBY COOLING AND HEATING – Served by FCU HW+CHW

A. Occupied hours space: Summer design 75°F 50%RH, Winter 72°. Chilled water shall modulate when space temperature between 76°F (adj.) to 73°F (adj.) in the summer, and hot water shall modulate when space temperature between 72°F (adj.) to 70°F (adj.) in the winter.

B. Primary air delivered by VAV at design CFM at all time

C. Chilled and hot water control valve modulating to maintain the zone space temperature at set point.

D. When space temperature is ±5°F (adj.) of set point for more than 10 minutes (adj.), an alarm shall be generated at BMS.

1.14 MAIN ELECTRICAL SWITCHROOM COOLING & HEATING – Served by AHU-4, EH-4

A. Room Set point: Maximum 90°F (adj.), minimum 60°F (adj.). The room temperature shall not exceed 94°F.

B. When outside air temperature is above 90°F (adj.), outside air and exhaust air dampers shall close, return air damper shall open, AHU fan shall run, chilled water control valve shall modulate to maintain the space set point below 90°F (adj.).

C. When outside air temperature is between 40°F (adj.) and 90°F (adj.), outside air and exhaust air dampers shall open, return air damper shall close, AHU fan shall run, chilled water control valve shall modulate to maintain the space set point below 90°F (adj.). If room temperature falls below 60°F, AHU fan shall reduce speed to maintain room temperature at 60°F minimum. If room temperature falls below 60°F at minimum fan speed, fan shall stop, and all dampers shall close.

D. When outside air temperature is below 40°F (adj.), and room temperature is above set point 90°F (adj.), exhaust air dampers shall open, outside air damper and return air damper shall modulate to maintain minimum supply air temperature of 50°F (adj.). Fan shall start at the minimum cfm and increase as required. If room temperature is lower than 60°F (adj.), no cooling is required, fan shall stop, all dampers shall close.

E. When room temperature is below 50°F (adj.), EH-4 shall come on to maintain room temperature at 58°F (adj.).

F. When space temperature is ±5°F (adj.) of set point for more than 10 minutes (adj.), an alarm shall be generated at BMS.

1.15 ELEVATOR MACHINE ROOM COOLING & HEATING – Served by

A. Room Set point: Maximum 94°F (adj.), minimum 60°F (adj.). The room temperature shall not exceed 104°F or below 55°F.

B. When outside air temperature is above 94°F (adj.), outside air damper shall close, return air damper shall open, air conditioning unit fan shall run, chilled water control valve shall modulate to maintain the space set point below 94°F (adj.).

C. When outside air temperature is between 45°F (adj.) and 90°F (adj.), outside air damper shall open, return air damper shall close, air conditioning unit fan shall run, chilled water control valve shall modulate to maintain the space set point below 94°F (adj.). If room temperature falls below 55°F, fan shall stop, and all dampers shall close.

D. When outside air temperature is below 45°F (adj.), outside air damper shall close, return air damper shall open. If room temperature is lower than 60°F (adj.), electrical heater shall modulate to maintain the space above set point 60°F (adj.).

E. When outside air temperature is below 45°F (adj.), indoor temperature is higher than 90°F (adj.), outside air and return air damper shall modulate to the ensure the mixed supply air temperature is 45°F (adj.) minimum.

F. When space temperature is ±5°F (adj.) of set point for more than 10 minutes (adj.), an alarm shall be generated at BMS.

1.16 IT/ELECTRICAL CLOSET, MDF COOLING SYSTEM – Served by computer room AC system

A. Room Set point: Maximum 84°F (adj.), minimum 60°F (adj.). The room temperature shall not exceed 94°F.

B. Each in room AC shall run to maintain the space it serves below set point 84°F (adj.).

C. MDF room is served by duty/standby unit.

D. Each room controller with BACNet communication card shall provide BMS interface. Each room shall be monitored and controllable on BMS.

E. Alarm: High room temperature and humidity, condensate overflow.

F. Remote Dry cooler pump alarm, and glycol water temperature monitoring.

1.17 UNIT HEATER

A. Occupied Spaces: Occupied hours set point: 72°F (adj.). Unoccupied hours set point: 60°F (adj.).

B. Unoccupied Spaces: set point: 60°F (adj.).

C. Modulate hot water control valve to maintain the space temperature above set point.

D. Aquastat to prevent fan operation at low temperature.

E. Alarm: Space temperature below set point more than 10 minutes when hot water control valve is 100% open.

1.18 FINNED TUBE RADIATORS

A. Occupied hours set point: winter design 72°F (adj.). Unoccupied hours set point: winter 60°F (adj.).

B. Turn hot water control valve on/off to maintain the zone space temperature above set point.

C. Alarm: Space temperature below set point more than 10 minutes when zone hot water control valve is 100% open.

1.19 COMMAND CENTER – Served by Split system, variable refrigerant flow (VRF) with heat recovery

A. Occupied hours space: Summer design 75°F 50%RH, Winter 72°. Chilled water shall modulate when space temperature between 76°F (adj.) to 73°F (adj.) in the summer, and hot water shall modulate when space temperature between 72°F (adj.) to 70°F (adj.) in the winter.

B. Pre-treated outside air provided by AHU-5 at design CFM during occupied hours only.

C. Each AC unit shall run to maintain the space it serves below its set point. AC units are capable of providing cooling and heating simultaneously.

D. Finned tube radiator shall open/close the hot water control valve to maintain the space it serves above 72°F (adj.).

E. During emergency, when normal power is out, each AC unit shall run to maintain space temperature between 72°F (adj.) to 75°F (adj.). No outside air shall be provided during emergency.

F. Alarm: Space temperature 5°F (adj.) outside space set point more than 10 minutes, while hot/chilled water control valve is 100% open

1.20 EXHAUST FANS

A. Safeties: All exhaust air dampers shall be hardwire interlocked to open/close with the exhaust fan starter or VFD. If a damper position switch prevents fan from operating, an alarm shall be generated at BMS. If high/low pressure is sensed, fans shall be shut down and an alarm shall be generated.

B. Mechanical Equipment Room 122 and 122A

1. Room temperature shall be control between 60°F (adj.) to 95 °F (adj.), with maximum 100 °F. If 100 °F lasts more than 10 minutes (adj.), an alarm shall be generated at BMS.

2. Exhaust fans shall be controlled by the respective room temperature sensor.

3. Outside air, exhaust and return damper positions shall be proven open before the fan to operate.

4. When outside air temperature is higher than room temperature, exhaust fans shall not run.

5. When room temperature is between 60°F (adj.) to 85°F (adj.), exhaust fan shall not run.

6. When outside air temperature is below room temperature and above 40 °F (adj.), if room temperature is above set point 85°F (adj.), exhaust fans shall start at minimum to maintain room temperature at 85°F (adj.). After 10 minutes if 85°F (adj.) cannot be maintained, exhaust fan shall increase speed, up to 100%.

7. When room temperature is below 58°F (adj.), the unit heater shall run.

8. When room temperature is above set point 85°F (adj.), and outdoor air temperature is below 40°F (adj.), the exhaust fan shall run, the return air and outside air dampers shall modulating to achieve the minimum supply air temperature of 50°F (adj.),

C. Fan Operation

1. Exhaust fan shall start/stop through the BMS based on a time of day schedule.

2. Damper position shall be proven open before the fan to operate.

3. All exhaust systems shall run at 100% capacity during scheduled operating time.

1.21 ELECTRICAL EQUIPMENT MONITORING

A. General

1. Refer to electrical drawings for quantities and locations of all types of equipment. Refer to electrical drawings and specs for additional information.

B. ATS

1. The BMS shall interface to each ATS via hardwired points. The following points shall be displayed on the BMS operator workstation. Coordinate with the equipment manufacturer.

   a. Connected to Normal Power

   b. Connected to Emergency Power

   c. Normal Source Available

   d. Emergency Source Available

C. Switchgear

1. The BMS shall interface to the switchgear via Modbus. All information, points, alarms, etc available via the interface shall be displayed on the BMS operator workstation. Coordinate with the equipment manufacturer to ensure that all available points are picked up by the BMS.

D. Switchgear Room Primary Transformers

1. The BMS shall interface to each ATS via hardwired points. The following points shall be displayed on the BMS operator workstation. Coordinate with the equipment manufacturer.

   a. High temperature alarm

1.22 PLUMBING INTERFACE

A. General

1. Plumbing contractor shall provide control sensor and devices and installation. Wiring provisions on control panels shall be made for the control points required or terminal strip for BMS interfacing. Refer to plumbing drawings for quantities and locations of all types of equipment. Refer to plumbing drawings and specs for additional information. Coordinate with the equipment manufacturer.

B. Domestic Water Booster Pumps, room 122, BP-1

1. BMS shall provide monitoring and alarm to the following equipment and points, and record time, duration of alarms.
2. Pump status
3. Common alarm

C. Domestic Hot Water Heaters, room 122, HWH-1

1. Two (2) circulator pumps status
2. Discharge water temperature, high/low, alarm

D. Elevator Sump Pumps, room 101, SP-1, SP-2

1. Two (2) circulator pumps status
2. Water level for each sump pit (2) and generate an alarm if a high level is reached.

E. Building water meter, room 122

1. Building main water meter consumption, record and trending.

PART 2 - PRODUCTS (NOT USED)

PART 3 - EXECUTION (NOT USED)

END OF SECTION

Pre-Functional Checklist

Project: OGS SOB Building #4 – OGS #45124

Project No. 11123671

SECTION: 232123

PUMPS

1. Submittal / Approvals

Submittal. The above equipment and systems integral to them are complete and ready for functional testing. This pre-functional checklist is submitted for approval, subject to an attached list of outstanding items yet to be completed. A Statement of Correction will be submitted upon completion of any outstanding areas. None of the outstanding items preclude safe and reliable functional tests being performed.

HVAC Contractor	Date	Construction Contractor	Date

Pre-functional checklist items are to be completed as part of startup & initial checkout, preparatory to functional testing.

- This checklist does not take the place of the manufacturer's recommended checkout and startup procedures or report
- If this form is not used for documenting, one of similar rigor shall be used
- Contractors assigned responsibility for sections of the checklist shall be responsible to see that checklist items by their subcontractors are completed and checked off

Approvals. This filled-out checklist has been reviewed. Its completion is approved with the exceptions noted below.

Commissioning Agent	Date	Director's Representative	Date

CIRCULATING WATER PUMPS

1. Requested Documentation Submitted

Equipment Tag-->	DC-P	CHWP-1	CHWP-2	CHWP-3	CHWP-4	FPWP-1	FPWP-2	FPWP-3	HWP-1	HWP-2
Manufacturer's cut sheets										
O&M Manuals										
Performance data										

2. Model Verification

Equipment Tag-->	DC-P	CHWP-1	CHWP-2	CHWP-3	CHWP-4	FPWP-1	FPWP-2	FPWP-3	HWP-1	HWP-2
Manufacturer										
Model No.										
Serial No.										
Volts / Ph. / Hz										
Amps										
Motor Efficiency										
HP										
RPM										
GPM										
Head-ft										

3. Physical Installation Check

Equipment Tag-->	DC-P	CHWP-1	CHWP-2	CHWP-3	CHWP-4	FPWP-1	FPWP-2	FPWP-3	HWP-1	HWP-2
Seismic Restraints										
Mounting/support system and vibration isolation										
Freedom of rotation										
Lubrication										
Electric wiring complete										
Disconnect switch (tested)										
Control system – point to point checks complete										
Pressure manifold & gauge installed										
Shut off valves installed										
Triple duty valve or balance valve and shut off valve installed										
Concrete pad installed										
Flex connectors installed										
Pump labeled										
Strainer installed and clean										
Field alignment complete										
Temperature gauges installed										
Flow gauges installed										
Pump casing insulated										

Equipment Tag-->	DC-P	CHWP-1	CHWP-2	CHWP-3	CHWP-4	FPWP-1	FPWP-2	FPWP-3	HWP-1	HWP-2
Piping complete										
Piping insulated										

4. Operational Checks

Equipment Tag-->	DC-P	CHWP-1	CHWP-2	CHWP-3	CHWP-4	FPWP-1	FPWP-2	FPWP-3	HWP-1	HWP-2
Direction of rotation										
Electrical interlocks start / stop										
Vibration & noise level acceptable										

CONDENSATE PUMPS

1. Requested Documentation Submitted

Equipment Tag--->	SCP –1	CP-1
Manufacturer's cut sheets		
O&M Manuals		
Performance data		

2. Model Verification

Equipment Tag--->	SCP – 1	CP-1
Manufacturer		
Model No.		
Serial No.		
Volts / Ph. / Hz		
Amps		
Motor Efficiency		
HP		
RPM		
GPM		
Head-ft		

3. Physical Installation Check

Equipment Tag--->	SCP – 1	CP-1
Mounting/support system and vibration isolation		
Freedom of rotation		
Lubrication		
Electric wiring complete		
Disconnect switch (tested)		

Equipment Tag--->	SCP – 1	CP-1
Control system – point to point checks complete		
Shut off valves installed		
Flex connector installed		
Pump labeled		
Strainer installed and clean		
Piping complete		
Piping insulated		

4. Operational Checks

Equipment Tag--->	SCP – 1	CP-1
Electrical interlocks start / stop		
Vibration & noise level acceptable		

END OF CHECKLIST

Functional Test

Project: OGS SOB Building #4 – OGS #45124

Project No. 11123671

SECTION: 232123

PUMPS

1. Submittal / Approvals

Submittal: The equipment and systems integral have undergone functional testing. The checklist items are complete and have been checked off only by parties having direct knowledge of the event, as marked below, respective to each responsible contractor. This functional checklist is submitted for approval, subject to an attached list of outstanding items yet to be completed. A Statement of Correction will be submitted upon completion of any outstanding areas.

HVAC Contractor	Date	Construction Contractor	Date

Approvals: This filled-out checklist has been reviewed. Its completion is approved with exceptions noted below.

Commissioning Agent	Date	Director's Representative	Date

1. Prerequisite Checklist

a. ____ The Pre-functional checklist is complete and the pumps are ready for functional testing

b. ____ All A/E punchlist items for this equipment are corrected

c. ____ Safeties and operating ranges reviewed

d. ____ Sufficient clearance around equipment for servicing

e. ____ O&M Manuals provided

f. ____ These functional test procedures reviewed and approved

2. Testing Procedures and Record

No	Req. ID	Testing Procedure		Pass Y/N
1	**DC-P**	Start pump. Check the amperage, flow, static pressure and water temperature at the circulating pump.	Amperage should be less than the rated amps. Rated = _____ Amps [_____ Amps] [_____ GPM] [_____ ft. head] [_____ °F]	
2		Change the schedule so the pump turns OFF.	Pump turns OFF. Standby pump turns ON	
3		Schedule the pump to be ON. Return schedule to normal.	Pump turns ON. Schedule returned to normal.	

No	Req. ID	Testing Procedure		Pass Y/N
1	CHWP	The campus chilled water system shall be enabled and disabled by manual turn on/off the isolation valves.		
2		The BMS shall modulate the speed of the lead chilled water pump to maintain the chilled water differential pressure setpoint. The differential pressure setpoint shall start at a preset value determined during balancing. The differential pressure setpoint shall be reset based on chilled water control valve position. If no control valve in the loop served by the pumps is greater than 80% (adj.) open, decrease the differential pressure setpoint until at least one valve is greater than 90% (adj.) open. If any valve is greater than 95% (adj.) open, increase the differential pressure setpoint until all valves are below 95% (adj.) open. Time delays shall be present between setpoint adjustments to allow the system to stabilize. The setpoint shall not be reset more than once every 10 minutes (adj.). If only one chilled water pump is operating and it is at minimum speed, the differential pressure bypass valve shall open as required to maintain the system differential pressure. The bypass valve shall remain closed whenever the pump is above minimum speed. The bypass valve shall be fully closed before the pump speed increases above minimum.		
3		When the system is enabled, the lead chilled water pumps for both high and low temperature chilled water systems shall start unloaded and slowly ramp up to speed. When the system is disabled, the low temperature chilled water pump shall stop and all automatic control and isolation valves shall close, while the high temperature chilled water pump shall continue to operate via the heat exchanger connected to the air cooled chiller.		
4		After a pump is commanded on, there shall be a 30 second (adj.) delay before a pump alarm is issued. During normal operation the BMS shall wait 30 seconds (adj.) to monitor the pump status change before indicating a pump failure alarm. Upon indication of a pump failure alarm, the failed pump shall be commanded off and the standby pump shall be commanded on.		
5		The pumps shall run in a lead/lag configuration. The BMS shall totalize run time of each pump and rotate the lead pump to equalize runtime (adj.).		
6	CHWP–1	Start pump. Check the amperage, flow, static pressure and water temperature at the circulating pump.	Amperage should be less than the rated amps. Rated = _____ Amps [_____ Amps] [_____ GPM] [_____ ft. head] [_____ °F]	

7	**CHWP–2**	Start pump. Check the amperage, flow, static pressure and water temperature at the circulating pump.	Amperage should be less than the rated amps. Rated = _____ Amps [_____ Amps] [_____ GPM] [_____ ft. head] [_____ °F]	
8	**CHWP–3**	Start pump. Check the amperage, flow, static pressure and water temperature at the circulating pump.	Amperage should be less than the rated amps. Rated = _____ Amps [_____ Amps] [_____ GPM] [_____ ft. head] [_____ °F]	
9	**CHWP–4**	Start pump. Check the amperage, flow, static pressure and water temperature at the circulating pump.	Amperage should be less than the rated amps. Rated = _____ Amps [_____ Amps] [_____ GPM] [_____ ft. head] [_____ °F]	

No	Req. ID	Testing Procedure		Pass Y/N
1		The freeze protection pump shall be connected to and controlled by the associated AHU controller.		
2		The freeze protection pump shall run whenever the outside air temperature falls below 38°F (adj.).		
3		The BMS shall monitor each pump via a current sensor. There shall be a 30 second (adj.) delay before a pump alarm is issued.		
4	**FPWP–1**	Start pump. Check the amperage, flow, static pressure and water temperature at the circulating pump.	Amperage should be less than the rated amps. Rated = _____ Amps [_____ Amps] [_____ GPM] [_____ ft. head] [_____ °F]	

5	**FPWP–2**	Start pump. Check the amperage, flow, static pressure and water temperature at the circulating pump.	Amperage should be less than the rated amps. Rated = _____ Amps [_____ Amps] [_____ GPM] [_____ ft. head] [_____ °F]	
6	**FPWP–3**	Start pump. Check the amperage, flow, static pressure and water temperature at the circulating pump.	Amperage should be less than the rated amps. Rated = _____ Amps [_____ Amps] [_____ GPM] [_____ ft. head] [_____ °F]	

No	Req. ID	Testing Procedure	Pass Y/N
1	**HWP**	The system shall be enabled based upon system demand or manual command. When the system is enabled, the lead heat exchanger isolation valves shall open. When the valve proves open, the lead hot water pump shall start unloaded and slowly ramp up to speed. When the system is disabled, hot water pumps shall stop and all heat exchanger control and isolation valves shall close.	
2		When a pump proves on, the steam control valves shall be allowed to operate. The BMS shall control the lead heat exchanger steam valves to maintain the hot water supply water temperature setpoint.	
3		The BMS shall modulate the speed of the lead hot water pump to maintain the hot water differential pressure setpoint. The differential pressure setpoint shall start at a preset value determined during balancing. The differential pressure setpoint shall be reset based on hot water control valve position. If no control valve in the loop served by the pumps is greater than 80% (adj.) open, decrease the differential pressure setpoint until at least one valve is greater than 90% (adj.) open. If any valve is greater than 95% (adj.) open, increase the differential pressure setpoint until all valves are below 95% (adj.) open. Time delays shall be present between setpoint adjustments to allow the system to stabilize. The setpoint shall not be reset more than once every 10 minutes (adj.).	

4		If only one hot water pump is operating and it is at minimum speed, the differential pressure bypass valve shall open as required to maintain the system differential pressure. The bypass valve shall remain closed whenever the pump is above minimum speed. The bypass valve shall be fully closed before the pump speed increases above minimum.		
5		After a pump is commanded on, there shall be a 30 second (adj.) delay before a pump alarm is issued. During normal operation the BMS shall wait 30 seconds (adj.) to monitor the pump status change before indicating a pump failure alarm. Upon indication of a pump failure alarm, the failed pump shall be commanded off and the standby pump shall be commanded on.		
6		The pumps shall run in a lead/lag configuration. The BMS shall totalize run time of each pump and rotate the lead pump to equalize runtime (adj.).		
7	**HWP–1**	Start pump. Check the amperage, flow, static pressure and water temperature at the circulating pump.	Amperage should be less than the rated amps. Rated = _____ Amps [_____ Amps] [_____ GPM] [_____ ft. head] [_____ °F]	
8	**HWP–2**	Start pump. Check the amperage, flow, static pressure and water temperature at the circulating pump.	Amperage should be less than the rated amps. Rated = _____ Amps [_____ Amps] [_____ GPM] [_____ ft. head] [_____ °F]	

No	Req. ID	Testing Procedure		Pass Y/N
1	**SCP-1**	Start pump. Check the amperage, flow, and static pressure at the pump.	Amperage should be less than the rated amps. Rated = _____ Amps [_____ Amps] [_____ GPM] [_____ ft. head]	

2	**CP-1**	Start pump. Check the amperage, flow, and static pressure at the pump. The BMS shall monitor the status (via current switch) and common alarm (via contact from manufacturer provided controls) for condensate pump.	Amperage should be less than the rated amps. Rated = _____ Amps [_____ Amps] [_____ GPM] [_____ ft. head]	

END OF TEST

Pre-Functional Checklist

Project: OGS SOB Building #4 – OGS #45124

Project No. 11123671

SECTION: 233415

CENTRIFUGAL IN-LINE FANS

1. Submittal / Approvals

Submittal. The above equipment and systems integral to them are complete and ready for functional testing. This pre-functional checklist is submitted for approval, subject to an attached list of outstanding items yet to be completed. A Statement of Correction will be submitted upon completion of any outstanding areas. None of the outstanding items preclude safe and reliable functional tests being performed.

HVAC Contractor	Date	Construction Contractor	Date

Pre-functional checklist items are to be completed as part of startup & initial checkout, preparatory to functional testing.

- This checklist does not take the place of the manufacturer's recommended checkout and startup procedures or report
- If this form is not used for documenting, one of similar rigor shall be used
- Contractors assigned responsibility for sections of the checklist shall be responsible to see that checklist items by their subcontractors are completed and checked off

Approvals. This filled-out checklist has been reviewed. Its completion is approved with the exceptions noted below.

Commissioning Agent	Date	Director's Representative	Date

2. Requested Documentation Submitted

Equipment Tag--->	EF	GEF	TEF
Manufacturer's cut sheets			
Performance data			
O&M manuals			

3. Model Verification

Equipment Tag	EF – 1	EF – 2	EF – 3	GEF-1
Service				
Manufacturer				
Model No.				
Serial No.				
CFM				
Motor Manufacturer				
Motor Model No.				
Volt / Ph / Hz				
Amps				
HP				
RPM				
Motor Efficiency				

Equipment Tag	GEF-2	TEF-1	TEF-2
Service			
Manufacturer			
Model No.			
Serial No.			
CFM			
Motor Manufacturer			
Motor Model No.			
Volt / Ph / Hz			
Amps			
HP			
RPM			
Motor Efficiency			

4. Physical Installation Check

Equipment Tag--->	EF-1	EF-2	EF-3	GEF-1	GEF-2	TEF-1	TEF-2
Mounting/support system and vibration isolation							
Flexible connections							
Seismic restraints							
Equipment guards							
Alignment correct							
Freedom of rotation							
Lubrication							
Plenum/volute clean							
Duct system tested and cleaned							
Fire & smoke dampers opened; access doors installed							
Exhaust louvers tested (gravity or motorized)							
Building & fan room cleanliness							
Electrical wiring complete							
Motor rated for VFD service							
Overload protection sized correctly							
Disconnect switch tested							
Labels installed on fan starter							
Casing good condition							
Duct system complete							

5. Operational Checks

Equipment Tag--->	EF-1	EF-2	EF-3	GEF-1	GEF-2	TEF-1	TEF-2
Direction of rotation							
Electrical interlocks – stop/start							
Local air leakage acceptable							
Vibration & noise level acceptable							

END OF CHECKLIST

Functional Test

Project: OGS SOB Building #4 – OGS #45124

Project No. 11123671

SECTION: 233415

CENTRIFUGAL FANS

1. Submittal / Approvals

Submittal: The equipment and systems integral have undergone functional testing. The checklist items are complete and have been checked off only by parties having direct knowledge of the event, as marked below, respective to each responsible contractor. This functional checklist is submitted for approval, subject to an attached list of outstanding items yet to be completed. A Statement of Correction will be submitted upon completion of any outstanding areas.

HVAC Contractor	Date	Construction Contractor	Date

Approvals: This filled-out checklist has been reviewed. Its completion is approved with exceptions noted below.

Commissioning Agent	Date	Director's Representative	Date

1. Prerequisite Checklist

a. ____ The Pre-functional checklist is complete and the unit is ready for functional testing
b. ____ All A/E punchlist items for this equipment are corrected
c. ____ Safeties and operating ranges reviewed
d. ____ Sufficient clearance around equipment for servicing
e. ____ O&M Manuals provided
f. ____ These functional test procedures reviewed and approved by installing contractor and vendors

2. Testing Procedures and Record

No.	Req. ID No.	Testing Procedure	Pass Y/N
	EF – 1		
1		Exhaust fans shall be controlled by the respective room temperature sensor. Room temperature shall be control between 60°F (adj.) to 95 °F, with maximum 100 °F. Outside air and exhaust air damper positions shall be proven open before the fan to operate. Exhaust fans shall run at 10% minimum between 60°F (adj.) to 85°F (adj.); increase capacity 10% to maintain 85°F (adj.) every 10 minutes if 85°F (adj.) cannot be maintained, up to 100%. Exhaust fans shall stop when room temperature below 60°F (adj.)	
2		Automatic restart of fan after an equipment or life safety system shutdown trip shall be software prohibited through the deenergization of the remote start/stop contact. Fan restart shall be manually initiated by the operator either locally or remotely through the DDC system operator workstation.	
3		All exhaust air dampers shall be hardwire interlocked to open/close with the exhaust fan starter or VFD. If a damper position switch prevents fan from operating, an alarm shall be generated at BMS. If high/low pressure is sensed, fans shall be shut down and an alarm shall be generated.	
	EF – 2		
1		Exhaust fans shall be controlled by the respective room temperature sensor. Room temperature shall be control between 60°F (adj.) to 95 °F, with maximum 100 °F. Outside air and exhaust air damper positions shall be proven open before the fan to operate. Exhaust fans shall run at 10% minimum between 60°F (adj.) to 85°F (adj.); increase capacity 10% to maintain 85°F (adj.) every 10 minutes if 85°F (adj.) cannot be maintained, up to 100%. Exhaust fans shall stop when room temperature below 60°F (adj.)	
2		Automatic restart of fan after an equipment or life safety system shutdown trip shall be software prohibited through the deenergization of the remote start/stop contact. Fan restart shall be manually initiated by the operator either locally or remotely through the DDC system operator workstation.	

3		All exhaust air dampers shall be hardwire interlocked to open/close with the exhaust fan starter or VFD. If a damper position switch prevents fan from operating, an alarm shall be generated at BMS. If high/low pressure is sensed, fans shall be shut down and an alarm shall be generated.	
	EF – 3		
1		A. Exhaust fan shall start/stop through the BMS based on a time schedule. B. Damper position shall be proven open before the fan to operate. C. Exhaust system shall run at 100% capacity during scheduled operating time.	
2		Automatic restart of fan after an equipment or life safety system shutdown trip shall be software prohibited through the deenergization of the remote start/stop contact. Fan restart shall be manually initiated by the operator either locally or remotely through the DDC system operator workstation.	
3		All exhaust air dampers shall be hardwire interlocked to open/close with the exhaust fan starter or VFD. If a damper position switch prevents fan from operating, an alarm shall be generated at BMS. If high/low pressure is sensed, fans shall be shut down and an alarm shall be generated.	
	GEF – 1		
1		A. Exhaust fan shall start/stop through the BMS based on a time schedule. B. Damper position shall be proven open before the fan to operate. C. Exhaust system shall run at 100% capacity during scheduled operating time.	
2		Automatic restart of fan after an equipment or life safety system shutdown trip shall be software prohibited through the deenergization of the remote start/stop contact. Fan restart shall be manually initiated by the operator either locally or remotely through the DDC system operator workstation.	
3		All exhaust air dampers shall be hardwire interlocked to open/close with the exhaust fan starter or VFD. If a damper position switch prevents fan from operating, an alarm shall be generated at BMS. If high/low pressure is sensed, fans shall be shut down and an alarm shall be generated.	
	GEF – 2		
1		A. Exhaust fan shall start/stop through the BMS based on a time schedule. B. Damper position shall be proven open before the fan to operate. C. Exhaust system shall run at 100% capacity during scheduled operating time.	
2		Automatic restart of fan after an equipment or life safety system shutdown trip shall be software prohibited through the deenergization of the remote start/stop contact. Fan restart shall be manually initiated by the operator either locally or remotely through the DDC system operator workstation.	
3		All exhaust air dampers shall be hardwire interlocked to open/close with the exhaust fan starter or VFD. If a damper position switch prevents fan from operating, an alarm shall be generated at BMS. If high/low pressure is sensed, fans shall be shut down and an alarm shall be generated.	
	TEF – 1		
1		A. Exhaust fan shall start/stop through the BMS based on a time schedule. B. Damper position shall be proven open before the fan to operate. C. Exhaust system shall run at 100% capacity during scheduled operating time.	

2		Automatic restart of fan after an equipment or life safety system shutdown trip shall be software prohibited through the deenergization of the remote start/stop contact. Fan restart shall be manually initiated by the operator either locally or remotely through the DDC system operator workstation.	
3		All exhaust air dampers shall be hardwire interlocked to open/close with the exhaust fan starter or VFD. If a damper position switch prevents fan from operating, an alarm shall be generated at BMS. If high/low pressure is sensed, fans shall be shut down and an alarm shall be generated.	
	TEF – 2		
1		A. Exhaust fan shall start/stop through the BMS based on a time schedule. B. Damper position shall be proven open before the fan to operate. C. Exhaust system shall run at 100% capacity during scheduled operating time.	
2		Automatic restart of fan after an equipment or life safety system shutdown trip shall be software prohibited through the deenergization of the remote start/stop contact. Fan restart shall be manually initiated by the operator either locally or remotely through the DDC system operator workstation.	
3		All exhaust air dampers shall be hardwire interlocked to open/close with the exhaust fan starter or VFD. If a damper position switch prevents fan from operating, an alarm shall be generated at BMS. If high/low pressure is sensed, fans shall be shut down and an alarm shall be generated.	

END OF TEST

Pre-Functional Checklist

Project: OGS SOB Building #4 – OGS #45124

Project No. 11123671

SECTION: 233600

AIR TERMINAL UNITS

1. Submittal / Approvals

Submittal. The above equipment and systems integral to them are complete and ready for functional testing. This pre-functional checklist is submitted for approval, subject to an attached list of outstanding items yet to be completed. A Statement of Correction will be submitted upon completion of any outstanding areas. None of the outstanding items preclude safe and reliable functional tests being performed.

HVAC Contractor	Date	Construction Contractor	Date

Pre-functional checklist items are to be completed as part of startup & initial checkout, preparatory to functional testing.

- This checklist does not take the place of the manufacturer's recommended checkout and startup procedures or report
- If this form is not used for documenting, one of similar rigor shall be used
- Contractors assigned responsibility for sections of the checklist shall be responsible to see that checklist items by their subcontractors are completed and checked off

Approvals. This filled-out checklist has been reviewed. Its completion is approved with the exceptions noted below.

Commissioning Agent	Date	Director's Representative	Date

2. Model verification – First Floor

VAV Box	Service	Manufacturer	Model #	Serial #	CFM		Inlet Size	MBH	GPM
					Min	Max			
VAV-1-1	First Floor								
VAV-1-4	First Floor								
VAV-1-8	First Floor								
VAV-1-12	First Floor								
VAV-1-16	First Floor								
VAV-1-19	First Floor								
VAV-1-22	First Floor								
VAV-1-25	First Floor								
VAV-1-28	First Floor								
VAV-1-31	First Floor								
VAV-1-34	First Floor								
VAV-1-37	First Floor								
VAV-1-41	First Floor								
VAV-1-44	First Floor								

Model verification – Second Floor

VAV Box	Service	Manufacturer	Model #	Serial #	CFM		Inlet Size	MBH	GPM
					Min	Max			
VAV-2-1	Second Floor								
VAV-2-4	Second Floor								
VAV-2-6	Second Floor								
VAV-2-9	Second Floor								
VAV-2-12	Second Floor								
VAV-2-15	Second Floor								

VAV-2-17B	Second Floor								
VAV-2-20	Second Floor								
VAV-2-23	Second Floor								
VAV-2-26	Second Floor								
VAV-2-29	Second Floor								
VAV-2-32	Second Floor								
VAV-2-37	Second Floor								
VAV-2-41	Second Floor								
VAV-2-44	Second Floor								

Model verification – Third Floor

VAV Box	Service	Manufacturer	Model #	Serial #	CFM		Inlet Size	MBH	GPM
					Min	Max			
VAV-3-8	Third Floor								
VAV-3-11	Third Floor								
VAV-3-14	Third Floor								
VAV-3-16A	Third Floor								
VAV-3-18	Third Floor								
VAV-3-21	Third Floor								
VAV-3-24	Third Floor								
VAV-3-27	Third Floor								
VAV-3-31	Third Floor								
VAV-3-34	Third Floor								
VAV-3-37	Third Floor								
VAV-3-40	Third Floor								
VAV-3-43	Third Floor								

3. Installation Checks

	VAV																							
General Installation	**1-1**	**1-2**	**1-3**	**1-4**	**1-5**	**1-7**	**1-8**	**1-10**	**1-11**	**1-12**	**1-13**	**1-15**	**1-16**	**1-17**	**1-18**	**1-19**	**1-20**	**1-21**	**1-22**	**1-23**	**1-24**	**1-25**	**1-26**	**1-27**
Permanent labels affixed																								
Casing condition good																								
Access doors close tightly																								
Maintenance access acceptable																								
Instrumentation installed																								
Clean up of equipment completed																								
Pipes properly insulated and supported																								
Valves/Pipes properly labeled																								
Strainers in place and clean																								
System properly flushed																								
No leaking around fittings																								
All coils/fins are clean and in good condition																								
Control valves installed																								
Dampers installed w/ minimum play																								
Turning vanes in square elbows																								
Pressure leakage tests completed as per SMACNA HVAC Air Duct Leakage Test																								
Install temporary closures on open ductwork to prevent dust from entering ductwork																								
Ducts cleaned as per spec's																								
All wiring complete																								

Installation Checks (continued)

	VAV																							
General Installation	**1-28**	**1-29**	**1-30**	**1-31**	**1-32**	**1-33**	**1-34**	**1-35**	**1-36**	**1-37**	**1-38**	**1-39**	**1-41**	**1-42**	**1-43**	**1-44**	**1-45**	**1-46**	**2-1**	**2-2**	**2-3**	**2-4**	**2-5A**	**2-5B**
Permanent labels affixed																								
Casing condition good																								
Access doors close tightly																								
Maintenance access acceptable																								
Instrumentation installed																								
Clean up of equipment completed																								
Pipes properly insulated and supported																								
Valves/Pipes properly labeled																								
Strainers in place and clean																								
System properly flushed																								
No leaking around fittings																								
All coils/fins are clean and in good condition																								
Control valves installed																								
Dampers installed w/ minimum play																								
Turning vanes in square elbows																								
Pressure leakage tests completed as per SMACNA HVAC Air Duct Leakage Test																								
Install temporary closures on open ductwork to prevent dust from entering ductwork																								
Ducts cleaned as per spec's																								
All wiring complete																								

Installation Checks (continued)

	VAV																							
General Installation	**2-6**	**2-7**	**2-8**	**2-9**	**2-10**	**2-11**	**2-12**	**2-13**	**2-14**	**2-15**	**2-16**	**2-17 A**	**2-17 B**	**2-18**	**2-19**	**2-20**	**2-21**	**2-22**	**2-23**	**2-24**	**2-25**	**2-26**	**2-27**	**2-28**
Permanent labels affixed																								
Casing condition good																								
Access doors close tightly																								
Maintenance access acceptable																								
Instrumentation installed																								
Clean up of equipment completed																								
Pipes properly insulated and supported																								
Valves/Pipes properly labeled																								
Strainers in place and clean																								
System properly flushed																								
No leaking around fittings																								
All coils/fins are clean and in good condition																								
Control valves installed																								
Dampers installed w/ minimum play																								
Turning vanes in square elbows																								
Pressure leakage tests completed as per SMACNA HVAC Air Duct Leakage Test																								
Install temporary closures on open ductwork to prevent dust from entering ductwork																								
Ducts cleaned as per spec's																								
All wiring complete																								

Installation Checks (continued)

	VAV																							
General Installation	**2-29**	**2-30**	**2-31**	**2-32**	**2-33**	**2-34**	**2-35**	**2-36**	**2-37**	**2-38**	**2-39**	**2-40**	**2-41**	**2-42**	**2-43**	**2-44**	**2-45**	**2-46**	**2-47**	**3-1A**	**3-1B**	**3-8**	**3-9**	**3-10**
Permanent labels affixed																								
Casing condition good																								
Access doors close tightly																								
Maintenance access acceptable																								
Instrumentation installed																								
Clean up of equipment completed																								
Pipes properly insulated and supported																								
Valves/Pipes properly labeled																								
Strainers in place and clean																								
System properly flushed																								
No leaking around fittings																								
All coils/fins are clean and in good condition																								
Control valves installed																								
Dampers installed w/ minimum play																								
Turning vanes in square elbows																								
Pressure leakage tests completed as per SMACNA HVAC Air Duct Leakage Test																								
Install temporary closures on open ductwork to prevent dust from entering ductwork																								
Ducts cleaned as per spec's																								
All wiring complete																								

Installation Checks (continued)

	VAV																							
General Installation	**3-11**	**3-12**	**3-13**	**3-14**	**3-15 A**	**3-15 B**	**3-16 A**	**3-16-B**	**3-17**	**3-18**	**3-19**	**3-20**	**3-21**	**3-22**	**3-23**	**3-24**	**3-25**	**3-26**	**3-27**	**3-28, 29**	**3-30**	**3-31**	**3-32**	**3-33**
Permanent labels affixed																								
Casing condition good																								
Access doors close tightly																								
Maintenance access acceptable																								
Instrumentation installed																								
Clean up of equipment completed																								
Pipes properly insulated and supported																								
Valves/Pipes properly labeled																								
Strainers in place and clean																								
System properly flushed																								
No leaking around fittings																								
All coils/fins are clean and in good condition																								
Control valves installed																								
Dampers installed w/ minimum play																								
Turning vanes in square elbows																								
Pressure leakage tests completed as per SMACNA HVAC Air Duct Leakage Test																								
Install temporary closures on open ductwork to prevent dust from entering ductwork																								
Ducts cleaned as per spec's																								
All wiring complete																								

Installation Checks (continued)

	VAV																							
General Installation	**3-34**	**3-35**	**3-36**	**3-37**	**3-38**	**3-39**	**3-40**	**3-41**	**3-42**	**3-43**														
Permanent labels affixed																								
Casing condition good																								
Access doors close tightly																								
Maintenance access acceptable																								
Instrumentation installed																								
Clean up of equipment completed																								
Pipes properly insulated and supported																								
Valves/Pipes properly labeled																								
Strainers in place and clean																								
System properly flushed																								
No leaking around fittings																								
All coils/fins are clean and in good condition																								
Control valves installed																								
Dampers installed w/ minimum play																								
Turning vanes in square elbows																								
Pressure leakage tests completed as per SMACNA HVAC Air Duct Leakage Test																								
Install temporary closures on open ductwork to prevent dust from entering ductwork																								
Ducts cleaned as per spec's																								
All wiring complete																								

4. Operational Checks

	VAV																							
General Installation	**1-1**	**1-2**	**1-3**	**1-4**	**1-5**	**1-7**	**1-8**	**1-10**	**1-11**	**1-12**	**1-13**	**1-15**	**1-16**	**1-17**	**1-18**	**1-19**	**1-20**	**1-21**	**1-22**	**1-23**	**1-24**	**1-25**	**1-26**	**1-27**
All dampers stroke fully without binding and spans calibrated																								
Valves stroke fully and easily																								
Valves verified to not be leaking through coils when closed at normal operating pressure																								
Variable air volume terminals for connection to central air system with DDC controls and hot water heating coils																								
Specified sequences of operation and operating schedules have been implemented with all variations documented																								
Specified point-to-point checks have been completed and documentation record submitted for this system																								

Operational Checks (continued)

	VAV																							
General Installation	**1-28**	**1-29**	**1-30**	**1-31**	**1-32**	**1-33**	**1-34**	**1-35**	**1-36**	**1-37**	**1-38**	**1-39**	**1-41**	**1-42**	**1-43**	**1-44**	**1-45**	**1-46**	**2-1**	**2-2**	**2-3**	**2-4**	**2-5A**	**2-5B**
All dampers stroke fully without binding and spans calibrated																								
Valves stroke fully and easily																								
Valves verified to not be leaking through coils when closed at normal operating pressure																								
Variable air volume terminals for connection to central air system with DDC controls and hot water heating coils																								
Specified sequences of operation and operating schedules have been implemented with all variations documented																								
Specified point-to-point checks have been completed and documentation record submitted for this system																								

Operational Checks (continued)

	VAV																							
General Installation	**2-6**	**2-7**	**2-8**	**2-9**	**2-10**	**2-11**	**2-12**	**2-13**	**2-14**	**2-15**	**2-16**	**2-17 A**	**2-17 B**	**2-18**	**2-19**	**2-20**	**2-21**	**2-22**	**2-23**	**2-24**	**2-25**	**2-26**	**2-27**	**2-28**
All dampers stroke fully without binding and spans calibrated																								
Valves stroke fully and easily																								
Valves verified to not be leaking through coils when closed at normal operating pressure																								
Variable air volume terminals for connection to central air system with DDC controls and hot water heating coils																								
Specified sequences of operation and operating schedules have been implemented with all variations documented																								
Specified point-to-point checks have been completed and documentation record submitted for this system																								

Operational Checks (continued)

	VAV																							
General Installation	**2-29**	**2-30**	**2-31**	**2-32**	**2-33**	**2-34**	**2-35**	**2-36**	**2-37**	**2-38**	**2-39**	**2-40**	**2-41**	**2-42**	**2-43**	**2-44**	**2-45**	**2-46**	**2-47**	**3-1A**	**3-1B**	**3-8**	**3-9**	**3-10**
All dampers stroke fully without binding and spans calibrated																								
Valves stroke fully and easily																								
Valves verified to not be leaking through coils when closed at normal operating pressure																								
Variable air volume terminals for connection to central air system with DDC controls and hot water heating coils																								
Specified sequences of operation and operating schedules have been implemented with all variations documented																								
Specified point-to-point checks have been completed and documentation record submitted for this system																								

Operational Checks (continued)

	VAV																							
General Installation	**3-11**	**3-12**	**3-13**	**3-14**	**3-15 A**	**3-15 B**	**3-16 A**	**3-16 B**	**3-17**	**3-18**	**3-19**	**3-20**	**3-21**	**3-22**	**3-23**	**3-24**	**3-25**	**3-26**	**3-27**	**3-28, 29**	**3-30**	**3-31**	**3-32**	**3-33**
All dampers stroke fully without binding and spans calibrated																								
Valves stroke fully and easily																								
Valves verified to not be leaking through coils when closed at normal operating pressure																								
Variable air volume terminals for connection to central air system with DDC controls and hot water heating coils																								
Specified sequences of operation and operating schedules have been implemented with all variations documented																								
Specified point-to-point checks have been completed and documentation record submitted for this system																								

Operational Checks (continued)

	VAV																							
General Installation	**3-34**	**3-35**	**3-36**	**3-37**	**3-38**	**3-39**	**3-40**	**3-41**	**3-42**	**3-43**														
All dampers stroke fully without binding and spans calibrated																								
Valves stroke fully and easily																								
Valves verified to not be leaking through coils when closed at normal operating pressure																								
Variable air volume terminals for connection to central air system with DDC controls and hot water heating coils																								
Specified sequences of operation and operating schedules have been implemented with all variations documented																								
Specified point-to-point checks have been completed and documentation record submitted for this system																								

END OF CHECKLIST

Functional Test

Project: OGS SOB Building #4 – OGS #45124

Project No. 11123671

SECTION: 233600

AIR TERMINAL UNITS

1. Submittal / Approvals

Submittal: The equipment and systems integral have undergone functional testing. The checklist items are complete and have been checked off only by parties having direct knowledge of the event, as marked below, respective to each responsible contractor. This functional checklist is submitted for approval, subject to an attached list of outstanding items yet to be completed. A Statement of Correction will be submitted upon completion of any outstanding areas.

HVAC Contractor	Date	Construction Contractor	Date

Approvals. This filled-out checklist has been reviewed. Its completion is approved with the exceptions noted below.

Commissioning Agent	Date	Director's Representative	Date

2. Testing Procedures and Record

No	Sequence of Operation	VAVs							
		1-1	1-4	1-8	1-12	1-16	1-19	1-22	1-25
	Occupancy								
1	CO^2 sensor continuously monitors space and enables outside air flow to maintain CO^2 parts per million below ___ PPM.								
	Room Temperature								
2	Heating Mode: Room thermostat senses space temperature and modulates damper to maintain temperature. Heating demand signal shall be sent when space temperature drops below ____°F.								
3	Cooling Mode: Whenever space temperature rises above ____° F, the chilled water control valve shall modulate to maintain room temperature setpoint								
4	Sequence damper from full open to minimum position.								
	Display								
	Room/Area Served Room Occupied/Unoccupied Room temperature indication Room temperature setpoint Room temperature setpoint, occupied Room temperature setpoint, unoccupied Air damper position as percent open								

2. Testing Procedures and Record (continued)

No	Sequence of Operation	VAVs							
		1-28	1-31	1-34	1-37	1-41	1-44	2-1	2-4
	Occupancy								
1	CO^2 sensor continuously monitors space and enables outside air flow to maintain CO^2 parts per million below ___ PPM.								
	Room Temperature								
2	Heating Mode: Room thermostat senses space temperature and modulates damper to maintain temperature. Heating demand signal shall be sent when space temperature drops below ____°F.								
3	Cooling Mode: Whenever space temperature rises above ____° F, the chilled water control valve shall modulate to maintain room temperature setpoint								
4	Sequence damper from full open to minimum position.								
	Display								
	Room/Area Served Room Occupied/Unoccupied Room temperature indication Room temperature setpoint Room temperature setpoint, occupied Room temperature setpoint, unoccupied Air damper position as percent open								

2. Testing Procedures and Record (continued)

No	Sequence of Operation	VAVs							
		2-6	2-9	2-12	2-15	2-17B	2-20	2-23	2-26
	Occupancy								
1	CO^2 sensor continuously monitors space and enables outside air flow to maintain CO^2 parts per million below ___ PPM.								
	Room Temperature								
2	Heating Mode: Room thermostat senses space temperature and modulates damper to maintain temperature. Heating demand signal shall be sent when space temperature drops below ____°F.								
3	Cooling Mode: Whenever space temperature rises above ____° F, the chilled water control valve shall modulate to maintain room temperature setpoint								
4	Sequence damper from full open to minimum position.								
	Display								
	Room/Area Served Room Occupied/Unoccupied Room temperature indication Room temperature setpoint Room temperature setpoint, occupied Room temperature setpoint, unoccupied Air damper position as percent open								

2. Testing Procedures and Record (continued)

No	Sequence of Operation	VAVs							
		2-29	2-32	2-37	2-41	2-44	3-8	3-11	3-14
	Occupancy								
1	CO^2 sensor continuously monitors space and enables outside air flow to maintain CO^2 parts per million below ___ PPM.								
	Room Temperature								
2	Heating Mode: Room thermostat senses space temperature and modulates damper to maintain temperature. Heating demand signal shall be sent when space temperature drops below ____°F.								
3	Cooling Mode: Whenever space temperature rises above ____° F, the chilled water control valve shall modulate to maintain room temperature setpoint								
4	Sequence damper from full open to minimum position.								
	Display								
	Room/Area Served Room Occupied/Unoccupied Room temperature indication Room temperature setpoint Room temperature setpoint, occupied Room temperature setpoint, unoccupied Air damper position as percent open								

2. Testing Procedures and Record (continued)

No	Sequence of Operation	VAVs							
		3-16A	3-18	3-21	3-24	3-27	3-31	3-34	3-37
	Occupancy								
1	CO^2 sensor continuously monitors space and enables outside air flow to maintain CO^2 parts per million below ___ PPM.								
	Room Temperature								
2	Heating Mode: Room thermostat senses space temperature and modulates damper to maintain temperature. Heating demand signal shall be sent when space temperature drops below ____°F.								
3	Cooling Mode: Whenever space temperature rises above ____° F, the chilled water control valve shall modulate to maintain room temperature setpoint								
4	Sequence damper from full open to minimum position.								
	Display								
	Room/Area Served Room Occupied/Unoccupied Room temperature indication Room temperature setpoint Room temperature setpoint, occupied Room temperature setpoint, unoccupied Air damper position as percent open								

No	Sequence of Operation	VAVs	
		3-40	3-43
	Occupancy		
1	CO^2 sensor continuously monitors space and enables outside air flow to maintain CO^2 parts per million below ___ PPM.		
	Room Temperature		
2	Heating Mode: Room thermostat senses space temperature and modulates damper to maintain temperature. Heating demand signal shall be sent when space temperature drops below ____°F.		
3	Cooling Mode: Whenever space temperature rises above ____° F, the chilled water control valve shall modulate to maintain room temperature setpoint		
4	Sequence damper from full open to minimum position.		
	Display		
	Room/Area Served Room Occupied/Unoccupied Room temperature indication Room temperature setpoint Room temperature setpoint, occupied Room temperature setpoint, unoccupied Air damper position as percent open		

END OF TEST

Pre-Functional Checklist

Project: OGS SOB Building #4 – OGS #45124

Project No. 11123671

SECTION: 235415

ELECTRIC HEATERS CABINET TYPE

1. Submittal / Approvals

Submittal. The above equipment and systems integral to them are complete and ready for functional testing. This pre-functional checklist is submitted for approval, subject to an attached list of outstanding items yet to be completed. A Statement of Correction will be submitted upon completion of any outstanding areas. None of the outstanding items preclude safe and reliable functional tests being performed.

Mechanical Contractor	Date	Construction Manager	Date

Pre-functional checklist items are to be completed as part of startup & initial checkout, preparatory to functional testing.

- This checklist does not take the place of the manufacturer's recommended checkout and startup procedures or report.
- If this form is not used for documenting, one of similar rigor shall be used.
- Contractors assigned responsibility for sections of the checklist shall be responsible to see that checklist items by their subcontractors are completed and checked off.

Approvals. This filled-out checklist has been reviewed. Its completion is approved with the exceptions noted below.

Commissioning Authority	Date	Owner's Representative	Date

2. Requested documentation submitted

EQUIPMENT TAG ->	EH-1	EH-2	EH-3	EH-4
Manufacturer's cut sheet				
Performance data				
O & M Manuals				

3. Model verification

EQUIPMENT TAG	EH-1	EH-2	EH-3	EH-4
Location				
Manufacturer				
Model				
Serial #				
Supply CFM				
Capacity (MBH)				
Volts / Ph. / Hz				
Amps				
HP / W				

4. Installation Checks

No.	EQUIPMENT TAG --->	EH-1	EH-2	EH-3	EH-4
	General Installation				
1	Permanent labels affixed, including for fans.				
2	Casing condition is good: no dents.				
3	Heating coils are in good condition.				
4	Maintenance access is acceptable for unit and components.				
5	Thermostats are installed.				
6	Instrumentation is installed according to specification.				
7	Cleanup of equipment is completed per contract documents.				
	Fans				
8	Fan area is clean.				
9	Fan and motor is properly lubricated.				
10	Fan has no unusual noise or vibration.				
	Electrical and Controls				
11	Power disconnects are in place and labeled.				
12	All electric connections are tight.				
13	Proper grounding is installed for components and unit.				
14	Safeties are in place and operable.				
15	Control system interlocks are hooked up and functional.				
16	All control devices and wiring is complete.				

END OF CHECKLIST

Functional Test

Project: OGS SOB Building #4 – OGS #45124

Project No. 11123671

SECTION: 235415

ELECTRIC UNIT HEATERS

1. Submittal / Approvals

Submittal: The equipment and systems integral have undergone functional testing. The checklist items are complete and have been checked off only by parties having direct knowledge of the event, as marked below, respective to each responsible contractor. This functional checklist is submitted for approval, subject to an attached list of outstanding items yet to be completed. A Statement of Correction will be submitted upon completion of any outstanding areas.

_____	_____	_____	_____
Mechanical Contractor	Date	Construction Manager	Date

Approvals: This filled-out checklist has been reviewed. Its completion is approved with exceptions noted below.

_____	_____	_____	_____
Commissioning Authority	Date	Owner's Representative	Date

1. Prerequisite Checklist.

a. ____ All control system functions for this systems are programmed and operable per Contract Documents.

b. ____ Testing, Adjusting & Balance (TAB) is complete and approved for the hydronic system.

c. ____ All A/E punchlist items for this equipment are corrected.

d. ____ These functional test procedures have been reviewed and approved by installing contractor.

e. ____ O&M manuals provided.

f. ____ There is sufficient clearance around equipment for servicing.

2. Testing Procedures and Record

No	Sequence of Operation	Pass Y/N
A.	**EH-1**	
	Shut-Down: The unit heater fans shall be de-energized under the following conditions:	
1	The unit heater fan is OFF through the EMS.	
2	The unit heater fan is OFF via electrical disconnect.	
	Start Up: The unit heater fans shall be energized under the following conditions.	
3	The unit heater fan is ON through the EMS.	
4	The unit heater fan is powered via electrical disconnect.	
	Temperature Control:	
5	Temperature Sensing: Temperature sensors shall be provided, installed and wiring on the air inlet rear of each unit heater.	
6	Temperature Setpoints: Each cabinet heater shall be assigned an occupied temperature setpoint and throttling range. a. Whenever the space temperature drops below setpoint, the fan shall be energized. b. Whenever the space temperature rises above setpoint, the fan shall be de-energized.	
B.	**EH-2**	
	Shut-Down: The unit heater fans shall be de-energized under the following conditions:	
1	The unit heater fan is OFF through the EMS.	
2	The unit heater fan is OFF via electrical disconnect.	
	Start Up: The unit heater fans shall be energized under the following conditions.	
3	The unit heater fan is ON through the EMS.	
4	The unit heater fan is powered via electrical disconnect.	
	Temperature Control:	
5	Temperature Sensing: Temperature sensors shall be provided, installed and wiring on the air inlet rear of each unit heater.	
6	Temperature Setpoints: Each cabinet heater shall be assigned an occupied temperature setpoint and throttling range. a. Whenever the space temperature drops below setpoint, the fan shall be energized. b. Whenever the space temperature rises above setpoint, the fan shall be de-energized.	

No	Sequence of Operation	Pass Y/N
C.	**EH-3**	
	Shut-Down: The unit heater fans shall be de-energized under the following conditions:	
1	The unit heater fan is OFF through the EMS.	
2	The unit heater fan is OFF via electrical disconnect.	
	Start Up: The unit heater fans shall be energized under the following conditions.	
3	The unit heater fan is ON through the EMS.	
4	The unit heater fan is powered via electrical disconnect.	
	Temperature Control:	
5	Temperature Sensing: Temperature sensors shall be provided, installed and wiring on the air inlet rear of each unit heater.	
6	Temperature Setpoints: Each cabinet heater shall be assigned an occupied temperature setpoint and throttling range. a. Whenever the space temperature drops below setpoint, the fan shall be energized. b. Whenever the space temperature rises above setpoint, the fan shall be de-energized.	
D.	**EH-4**	
	Shut-Down: The unit heater fans shall be de-energized under the following conditions:	
1	The unit heater fan is OFF through the EMS.	
2	The unit heater fan is OFF via electrical disconnect.	
	Start Up: The unit heater fans shall be energized under the following conditions.	
3	The unit heater fan is ON through the EMS.	
4	The unit heater fan is powered via electrical disconnect.	
	Temperature Control:	
5	Temperature Sensing: Temperature sensors shall be provided, installed and wiring on the air inlet rear of each unit heater.	
6	Temperature Setpoints: Each cabinet heater shall be assigned an occupied temperature setpoint and throttling range. a. Whenever the space temperature drops below setpoint, the fan shall be energized. b. Whenever the space temperature rises above setpoint, the fan shall be de-energized.	

END OF TEST

Pre-Functional Checklist

Project: OGS SOB Building #4 – OGS #45124

Project No. 11123671

SECTION: 235700

HEAT EXCHANGERS

1. Submittal / Approvals

Submittal. The above equipment and systems integral to them are complete and ready for functional testing. This pre-functional checklist is submitted for approval, subject to an attached list of outstanding items yet to be completed. A Statement of Correction will be submitted upon completion of any outstanding areas. None of the outstanding items preclude safe and reliable functional tests being performed.

HVAC Contractor	Date	Construction Contractor	Date

Pre-functional checklist items are to be completed as part of startup & initial checkout, preparatory to functional testing.

- This checklist does not take the place of the manufacturer's recommended checkout and startup procedures or report
- If this form is not used for documenting, one of similar rigor shall be used
- Contractors assigned responsibility for sections of the checklist shall be responsible to see that checklist items by their subcontractors are completed and checked off

Approvals. This filled-out checklist has been reviewed. Its completion is approved with the exceptions noted below.

Commissioning Agent	Date	Director's Representative	Date

2. Requested documentation submitted

Equip Tag->	HX-1	HX-2 and HX-3
Manufacturer's cut sheets		
Performance data		
O&M manuals		

3. Model verification

Equip Tag--->	HX – 1
Manufacturer	
Model #	
Serial #	
Total MBH	
Primary Side	
Flow (gpm)	
Entering Water Temp °F	
Leaving Water Temp °F	
Maximum Pressure Drop (FT-H_2O)	
Secondary Side	
Flow (gpm)	
Entering Water Temp °F	
Leaving Water Temp °F	
Maximum Pressure Drop (FT-H_2O)	

Equip Tag--->	HX – 2	HX – 3
Manufacturer		
Model #		
Serial #		
Total MBH		
Steam (Shell) Side		
Flow (LBS/HR)		
Inlet Pressure (PSIG)		
Water (Tube) Side		
Flow (gpm)		
Entering Water Temp °F		
Leaving Water Temp °F		
Maximum Pressure Drop (FT-H_2O)		

4. Physical Installation Checks

Equip Tag->			
	HX-1	HX-2	HX-3
General Installation			
General appearance good, no apparent damage			
Site sufficiently clean for testing			
Equipment labels affixed			
Service space adequate			
Pressure and temperature relief valves installed			
System filled			
Pressure gages installed			
Thermometers installed			
Control system interlocks hooked up and functional			
All control devices, and wiring complete			

Equip Tag->			
	HX-1	HX-2	HX-3
Heat Exchanger is properly anchored and supported			
Insulation and jacket complete			
Piping			
Piping complete, including, makeup water piping and safety relief valves			
Hydronic system flushing complete			
Isolation valves and balancing valves installed			
Pipe fittings and accessories complete			
Piping type and flow direction labeled on piping			
ASME pressure vessel data sheet or certification tag posted and inspection complete for each expansion tank			
Expansion tanks verified to not be air bound and system completely full of water			
Air vents and bleeds at high points of systems functional			
Glycol Fill Station operational			

5. Operational Checks (These augment mfr's list. This is not the functional performance testing).

Equip Tag->	HX		
	HX-1	HX-2	HX-3
Pumps, Controls and Safety Relief valves energized and tested			
Specified sequences of operation and operating schedules have been implemented with all variations documented			

END OF CHECKLIST

Functional Test

Project: OGS SOB Building #4 – OGS #45124

Project No. 11123671

SECTION: 235700

HEAT EXCHANGERS

1. Submittal / Approvals

Submittal: The equipment and systems integral have undergone functional testing. The checklist items are complete and have been checked off only by parties having direct knowledge of the event, as marked below, respective to each responsible contractor. This functional checklist is submitted for approval, subject to an attached list of outstanding items yet to be completed. A Statement of Correction will be submitted upon completion of any outstanding areas.

HVAC Contractor	Date	Construction Contractor	Date

Approvals: This filled-out checklist has been reviewed. Its completion is approved with exceptions noted below.

Commissioning Agent	Date	Director's Representative	Date

1. Prerequisite Checklist

a. ____ The Pre-functional checklist is complete and the unit is ready for functional testing
b. ____ All A/E punchlist items for this equipment are corrected
c. ____ Safeties and operating ranges reviewed
d. ____ Sufficient clearance around equipment for servicing
e. ____ O&M Manuals provided
f. ____ These functional test procedures reviewed and approved by installing contractor and vendors

2. Testing Procedures and Record

No		Testing Procedure	
	HX – 1		
1		Once the chiller is commanded to run via BMS by BMS staff, and operate at set temperature, the heat exchanger automatic isolation valves (changeover cooling source) shall open via BMS command, by BMS staff.	
2		When the chiller is disabled, heat exchange isolation valve shall close, via BMS command, by BMS staff.	
3		When the campus chilled water system is disabled, the low temperature chilled water pump shall stop and all automatic control and isolation valves shall close, while the high temperature chilled water pump shall continue to operate via the heat exchanger connected to the air cooled chiller.	
4		Campus CHW Supply Temp °F	
5		Campus CHW Return Temp °F	
6		Building CHW Supply Temp °F	
7		Building CHW Return Temp °F	

No		Testing Procedure	
	HX – 2		
1		When the system is enabled, the lead heat exchanger isolation valves shall open. When the valve proves open, the lead hot water pump shall start unloaded and slowly ramp up to speed.	
2		When the system is disabled, hot water pumps shall stop and all heat exchanger control and isolation valves shall close.	
3		The BMS shall modulate the 1/3 valve initially to maintain the hot water supply temperature setpoint. If setpoint cannot be maintained when 1/3 valve is fully open, BMS shall close the 1/3 valve fully and modulate 2/3 valve to maintain hot water supply setpoint. If setpoint cannot be maintained when 2/3 valve is fully open, BMS shall modulate 1/3 valve to open to maintain hot water supply setpoint. All valves shall modulate in unison to maintain the hot water supply temperature setpoint.	

4		If the hot water supply temperature setpoint cannot be met with the lead heat exchanger in 100% operation, the second heat exchanger isolation valve shall open and when the valve proves open, the second heat exchanger shall be enabled. When enabled, the second heat exchanger steam control valves shall modulate necessary to maintain the hot water supply temperature setpoint.	
5		If two heat exchangers are in operation and the hot water load falls below the maximum capacity of one heat exchanger, the second heat exchanger shall be disabled. The heat exchanger control valves and isolation valve shall close and remain closed.	
6		The heat exchangers shall run in a lead/lag configuration. The BMS shall totalize operation time of each heat exchanger and rotate the lead heat exchanger to equalize operation time (adj.).	
7		If an operating heat exchanger fails, the heat exchanger shall be disabled and an alarm shall be generated at the BMS. The next heat exchanger in sequence shall be enabled to operate in place of the failed heat exchanger. A heat exchanger shall be considered failed if any of the following occur: a. An isolation valve fails to reach the commanded position after a sufficient time delay for full travel. b. The heat exchanger secondary hot water temperature is 5 °F (adj.) above or below setpoint.	
8		Hot water setpoint shall linearly reset based on outdoor air temperature. Provide adjustable reset schedule as follows: a. OAT: 20 °F (adj.) or lower HW Setpoint: 190 °F (adj.) b. OAT: 60 °F (adj.) or lower HW Setpoint: 140 °F (adj.)	

No		**Testing Procedure**	
	HX – 3		
1		When the system is enabled, the lead heat exchanger isolation valves shall open. When the valve proves open, the lead hot water pump shall start unloaded and slowly ramp up to speed.	
2		When the system is disabled, hot water pumps shall stop and all heat exchanger control and isolation valves shall close.	
3		The BMS shall modulate the 1/3 valve initially to maintain the hot water supply temperature setpoint. If setpoint cannot be maintained when 1/3 valve is fully open, BMS shall close the 1/3 valve fully and modulate 2/3 valve to maintain hot water supply setpoint. If setpoint cannot be maintained when 2/3 valve is fully open, BMS shall modulate 1/3 valve to open to maintain hot water supply setpoint. All valves shall modulate in unison to maintain the hot water supply temperature setpoint.	
4		If the hot water supply temperature setpoint cannot be met with the lead heat exchanger in 100% operation, the second heat exchanger isolation valve shall open and when the valve proves open, the second heat exchanger shall be enabled. When enabled, the second heat exchanger steam control valves shall modulate necessary to maintain the hot water supply temperature setpoint.	
5		If two heat exchangers are in operation and the hot water load falls below the maximum capacity of one heat exchanger, the second heat exchanger shall be disabled. The heat exchanger control valves and isolation valve shall close and remain closed.	

6		The heat exchangers shall run in a lead/lag configuration. The BMS shall totalize operation time of each heat exchanger and rotate the lead heat exchanger to equalize operation time (adj.).	
7		If an operating heat exchanger fails, the heat exchanger shall be disabled and an alarm shall be generated at the BMS. The next heat exchanger in sequence shall be enabled to operate in place of the failed heat exchanger. A heat exchanger shall be considered failed if any of the following occur: a. An isolation valve fails to reach the commanded position after a sufficient time delay for full travel. b. The heat exchanger secondary hot water temperature is 5 °F (adj.) above or below setpoint.	
8		Hot water setpoint shall linearly reset based on outdoor air temperature. Provide adjustable reset schedule as follows: a. OAT: 20 °F (adj.) or lower HW Setpoint: 190 °F (adj.) b. OAT: 60 °F (adj.) or lower HW Setpoint: 140 °F (adj.)	

END OF TEST

Functional Test

Project: OGS SOB Building #4 – OGS #45124

Project No. 11123671

SECTION: 236424

AIR COOLED MODULAR CHILLER

1. Submittal / Approvals

Submittal: The equipment and systems integral have undergone functional testing. The checklist items are complete and have been checked off only by parties having direct knowledge of the event, as marked below, respective to each responsible contractor. This functional checklist is submitted for approval, subject to an attached list of outstanding items yet to be completed. A Statement of Correction will be submitted upon completion of any outstanding areas.

HVAC Contractor	Date	Construction Contractor	Date

Approvals: This filled-out checklist has been reviewed. Its completion is approved with exceptions noted below.

Commissioning Agent	Date	Director's Representative	Date

1. Prerequisite Checklist

a. ____ The Pre-functional checklist is complete and approved ready for functional testing.
b. ____ All A/E punchlist items for this equipment are corrected.
c. ____ Safeties and operating ranges reviewed.
d. ____ Sufficient clearance around equipment for servicing.
e. ____ O&M Manuals provided.
f. ____ These functional test procedures reviewed and approved by installing contractor and vendors.

2. Testing Procedures and Record.

Equipment Tag--->	**CH-1**
1. Chilled Water Flow	
2. DP Set point	
3. Chilled Water DP	
4. Voltage	
5. Amps	
6. Phase	
7. KW	
8. CHWS Temperature Set Point	

No	Test Procedure	Pass Y/N
1	Air cooled chiller provides chilled water via a heat exchanger from mid-November to mid-April for chilled beam system. Automatic changeover valves shown on the drawing shall receive open/close command via BMS to divert chilled beam water to the corresponding cooling source available at the time.	
2	The air cooled chiller system shall be enabled and operate at set temperatures before the changeover from campus chilled water system.	
3	The air cooled chiller system shall be disabled after the campus chilled water system is available and operate at set temperatures.	
4	System Enable/Disable shall be via BMS command manually, before campus chilled water to be disconnected.	
5	Microprocessor controller shall be fully interfaced to BMS via BACnet card furnished by equipment manufacturers, providing compressor and pump information and chilled water temperatures.	
6	Once the chiller is called to run, it shall provide chilled water at 52 ºF supply (adj.).	

7	Common alarm shall be generated at BMS Alarm shall be generated at BMS if water temperature are ±2°F(adj.) of its setpoint.	
8	Once the chiller is commanded to run via BMS by BMS staff, and operate at set temperature, the heat exchanger automatic isolation valves (changeover cooling source) shall open via BMS command, by BMS staff.	
9	When the chiller is disabled, heat exchange isolation valve shall close, via BMS command, by BMS staff.	

END OF TEST

Pre-Functional Checklist

Project: OGS SOB Building #4 – OGS #45124

Project No. 11123671

SECTION: 237313

AIR HANDLING UNITS

1. Submittal / Approvals

Submittal. The above equipment and systems integral to them are complete and ready for functional testing. This pre-functional checklist is submitted for approval, subject to an attached list of outstanding items yet to be completed. A Statement of Correction will be submitted upon completion of any outstanding areas. None of the outstanding items preclude safe and reliable functional tests being performed.

HVAC Contractor	Date	Construction Contractor	Date

Pre-functional checklist items are to be completed as part of startup & initial checkout, preparatory to functional testing.

- This checklist does not take the place of the manufacturer's recommended checkout and startup procedures or report
- If this form is not used for documenting, one of similar rigor shall be used
- Contractors assigned responsibility for sections of the checklist shall be responsible to see that checklist items by their subcontractors are completed and checked off

Approvals. This filled-out checklist has been reviewed. Its completion is approved with the exceptions noted below.

Commissioning Agent	Date	Director's Representative	Date

2. Requested documentation submitted

Equip Tag--->	AHU–1	AHU–2	AHU-3	AHU-4	AHU-5
Manufacturer's cut sheets					
Performance data (fan curves, coil data, etc.)					
O&M manuals					

3. Model verification

Equip Tag--->	AHU – 1	AHU – 2
Manufacturer		
Model		
Serial #		
Heating Capacity (MBH)		
Cooling Capacity (MBH)		
Air Filter Type (MERV)		
Supply Fan		
Manufacturer		
Model		
Volts/Ph/Hz		
Amps		
HP		
RPM		
CFM		
Efficiency		
VFD		
Manufacturer		
Model		
HP rating		
Voltage rating		

Equip Tag--->	AHU – 3	AHU – 4
Manufacturer		
Model		
Serial #		
Exhaust Fan		
Manufacturer		
Model		
Volts/Ph/Hz		
Amps		
HP		
RPM		
Return CFM		
Exhaust CFM		
Efficiency		
VFD		
Manufacturer		
Model		
HP rating		
Voltage rating		

Equip Tag--->	AHU – 5
Manufacturer	
Model	
Serial #	

Exhaust Fan	
Manufacturer	
Model	
Volts/Ph/Hz	
Amps	
HP	
RPM	
Return CFM	
Exhaust CFM	
Efficiency	
VFD	
Manufacturer	
Model	
HP rating	
Voltage rating	

4. Installation Checks

Equip Tag--->	AHU – 1	AHU – 2	AHU – 3	AHU – 4	AHU – 5
Cabinet and General Installation					
Permanent labels affixed, including for fans					
Casing condition good: no dents, leaks,					
Door gaskets installed and in good condition					
Access doors close tightly - no leaks					
Boot between duct and unit tight and in good condition					
Vibration isolation equipment installed & released from shipping locks					
Maintenance access acceptable for unit and components					
Sound attenuation installed					

Equip Tag--->	AHU – 1	AHU – 2	AHU – 3	AHU – 4	AHU – 5
Instrumentation installed according to specification (thermometers, pressure gages, flow meters, etc.)					
Clean up of equipment completed per contract documents					
Filters installed and replacement type and efficiency permanently affixed to housing--construction filters removed					
Valves, Piping and Coils					
Pipe fittings complete and pipes properly supported					
Pipes properly labeled					
Pipes properly insulated					
Strainers in place and clean					
Piping system properly flushed					
No leaking apparent around fittings					
All coils are clean and fins are in good condition					
All condensate drain pans clean and slope to drain					
Valves properly labeled					
Valves installed in proper direction					
OSAT, MAT, SAT, RAT, sensors properly located and secure (related OSAT sensor shielded)					
Motors: Premium efficiency verified, if spec'd?					
Pressure and temperature gauges installed per drawings					
Isolation valves installed per drawings					
Fans and Dampers					
Supply fan and motor alignment correct					
Supply fan belt tension and condition good, correct number of belts					
Supply fan protective shrouds for belts in place and secure					
Supply fan area clean					
Supply fan and motor properly lubricated					
Exhaust fan and motor alignment correct					

Equip Tag--->	AHU – 1	AHU – 2	AHU – 3	AHU – 4	AHU – 5
Exhaust fan belt tension and condition good, correct number of belts					
Exhaust fan protective shrouds for belts in place and secure					
Exhaust fan area clean					
Exhaust fan and motor properly lubricated					
Filters clean and tight fitting					
Filter pressure differential measuring device installed and functional (magnahelic, inclined manometer, etc.)					
Smoke and fire dampers installed properly per contract docs (proper location, access doors)					
All damper linkages have minimum play					
All dampers close tightly					
Low limit freeze stat sensor located to deal with stratification & bypass					
Ducts					
Sound attenuators installed					
Duct joint sealant properly installed					
No apparent severe duct restrictions					
Turning vanes in square elbows as per drawings					
Balancing dampers installed as per drawings					
OSA intakes located away from pollutant sources & exhaust outlets					
Pressure leakage tests completed					
Branch duct control dampers operable					
Ducts cleaned as per spec's					
Electrical and Controls					
Pilot lights are functioning					
Power disconnects in place and labeled					
All electric connections tight					
Proper grounding installed for components and unit					
Safeties in place and operable					

Equip Tag--->	AHU – 1	AHU – 2	AHU – 3	AHU – 4	AHU – 5
Starter overload breakers installed and correct size					
Control system interlocks hooked up and functional					
All control devices, pneumatic tubing and wiring complete					
VFD					
VFD powered (wired to controlled equipment)					
VFD interlocked to control system					
Static pressure or other controlling sensor properly located and per drawings and calibrated					
Static pressure or other controlling sensor calibrated					
Drive location not subject to excessive temperatures					
Drive location not subject to excessive moisture or dirt					
Drive size matches motor sizes					
TAB					
Installation of system and balancing devices allowed balancing to be completed following specified NEBB or AABC procedures and contract documents					
Final					
Smoke and fire dampers and unpowered TU's are open					
Startup report completed with this checklist attached					
Safeties installed and safe operating ranges for this equipment provided to the commissioning agent					
If unit is started and will be running during construction: have quality filters on RA grills, etc. to minimize dirt in the ductwork and coils and in any finished areas. Verify moisture migration is not a problem, due to improper pressures between spaces.					

5. Operational Checks

Equip Tag--->	AHU – 1	AHU – 2	AHU – 3	AHU – 4	AHU – 5
Supply fan rotation correct					
Supply fan has no unusual noise or vibration					
Exhaust fan rotation correct					
Exhaust fan has no unusual noise or vibration					
All dampers (OSA, RA, EA, etc.) stroke fully without binding and spans calibrated and BAS reading site verified (follow procedure in Calibration and Leak-by Test Procedures)					
Valves stroke fully and easily and spanning is calibrated (follow procedure in Calibration and Leak-by Test Procedures).					
Valves verified to not be leaking through coils when closed at normal operating pressure (follow procedure in Calibration and Leak-by Test Procedures).					
The HOA switch properly activates and deactivates the unit					
Specified sequences of operation and operating schedules have been implemented with all variations documented					
Specified point-to-point checks have been completed and documentation record submitted for this system					

END OF CHECKLIST

Functional Test

Project: OGS SOB Building #4 – OGS #45124

Project No. 11123671

SECTION: 237313

AIR HANDLING UNITS

1. Submittal / Approvals

Submittal: The equipment and systems integral have undergone functional testing. The checklist items are complete and have been checked off only by parties having direct knowledge of the event, as marked below, respective to each responsible contractor. This functional checklist is submitted for approval, subject to an attached list of outstanding items yet to be completed. A Statement of Correction will be submitted upon completion of any outstanding areas.

HVAC Contractor	Date	Construction Contractor	Date

Approvals: This filled-out checklist has been reviewed. Its completion is approved with exceptions noted below.

Commissioning Agent	Date	Director's Representative	Date

1. Prerequisite Checklist

a. ____ The Pre-functional checklist is complete and the unit is ready for functional testing.
b. ____ All A/E punchlist items for this equipment are corrected.
c. ____ Safeties and operating ranges reviewed.
d. ____ Sufficient clearance around equipment for servicing.
e. ____ O&M Manuals provided.
f. ____ These functional test procedures reviewed and approved by installing contractor and vendors.

Parameter	Pre-Test Values
Discharge air static pressure	
Discharge air temperature	
Discharge air reset schedule	
Building static pressure	
Dirty filter differential pressure	
Outside air CFM	

Sensor	Location	Gage or BAS Value	Instrument Measured Value
DAT			
RAT			
OAT			
Discharge SP			

2. Functional Testing Record

	AHU - 1	Pass Yes/No
A.	**General**	
1	When system is off: All valves, dampers shall be in their normal position, except the heating control valve and freeze protection pump which shall modulate and run to maintain a plenum temperature of minimum 50 °F. The AHU associated unit mounted smoke isolation dampers shall be closed.	
2	When the system is commanded on, the following sequences occur:	
	a. The AHU startup shall be as scheduled or via BMS command.	

	b. The smoke dampers at in/outlet of the unit shall start to open to full.	
	c. The exhaust, outside air dampers shall slowly open.	
	d. After an adjustable time delay and the damper position switches at the unit prove all damper positions, the supply fan and return fan shall start in unison and slowly ramp up. Supply fans shall modulate to maintain the duct mounted air pressure setpoint (adj.) sensed by PDT.	
	e. The supply, return fan and outside air CFM shall be monitored via air flow measure stations. Return air shall be calculated by BMS: supply airflow minus associated exhaust air systems.	
B.	**Normal Occupied Mode**	
1	Dew Point Control shall be used when outside air dew point is above discharge dew point 44°F (adj.).	
	a. Enthalpy wheel speed at 20 RPM b. Passive wheel speed at 0.25 RPM c. Wheel bypass dampers closed d. Supply air heating valve closed e. Cooling coil valve modulates to meet supply air dew point set point 44°F (adj.) and maximum supply air temperature set point of 60°F (adj.). f. Return heating coil valve to modulate to fully open if supply air dew point is 5°F above set point to boost dehumidification. g. Supply fan to run on static pressure set point h. Exhaust fan to run based on CFM feedback from supply air duct.	
2	Economizer control shall be used when the outdoor air dew point is equal to or below the supply air dew point set point and the outdoor air temperature is 35°F (adj.) and higher.	
	a. Enthalpy wheel speed to be 0.25 RPM b. Passive wheel speed to be 0.25 RPM c. Both wheel bypass dampers open d. Supply air heating valve to modulate to maintain 60°F discharge set point (adj.) e. Cooling coil valve closed f. Return heating coil valve closed g. Supply fan to run on static pressure set point h. Exhaust fan to run based on CFM feedback from supply air duct.	
3	Discharge air temperature control shall be used when the outdoor air temperature is below 35°F (adj.)	
	a. Enthalpy wheel speed to be reset with VFD to meet 60°F leaving air temperature set point (adj.) b. Passive wheel speed to be 0.25 RPM c. Wheel by pass dampers closed on enthalpy wheel d. Wheel by pass dampers open on passive wheel e. Supply air heating valve modules as second stage heat to maintain 60°F leaving air set point (adj.). f. Cooling coil valve closed	

	g. Command heating coil control valve to fully open if supply air temperature drops below 60°F and if wheel frosting occurs on enthalpy wheel. h. Supply fan to run on static pressure set point i. Exhaust fan to run based on CFM feedback from supply air duct. j. Unit to shut down when supply air temperature is below 40°F (adj.) for more than 5 minutes (adj.)	
C.	**Scheduled Unoccupied Cooling Mode**	
1	a. Return and supply dampers open. Exhaust air and outside air dampers closed. Recirculating bypass damper open. Exhaust fan off. Supply fan on. b. VAV serving internal zones closed. VAV serving external zones shall open. VAV to modulate to meet room set point, after the zone chilled water valve closed. c. Supply fan to modulate to maintain duct static pressure d. Passive wheel to rotate to maintain lowest possible leaving air dew point e. Chilled water valve to modulate to meet discharge dew point. f. Return air heating valve to modulate to fully open if supply air dew point is 5°F above set point to boost dehumidification g. Space dew points shall maintain under 55°F in unoccupied mode.	
D.	**Scheduled Unoccupied Heating Mode**	
1	All dampers closed. All fans off. No ventilation required during unoccupied.	

	AHU - 2	**Pass Yes/No**
A.	**General**	
1	When system is off: All valves, dampers shall be in their normal position, except the heating control valve and freeze protection pump which shall modulate and run to maintain a plenum temperature of minimum 50 °F. The AHU associated unit mounted smoke isolation dampers shall be closed.	
2	When the system is commanded on, the following sequences occur:	
	a. The AHU startup shall be as scheduled or via BMS command.	
	b. The smoke dampers at in/outlet of the unit shall start to open to full.	
	c. The exhaust, outside air dampers shall slowly open.	
	d. After an adjustable time delay and the damper position switches at the unit prove all damper positions, the supply fan and return fan shall start in unison and slowly ramp up. Supply fans shall modulate to maintain the duct mounted air pressure setpoint (adj.) sensed by PDT.	
	e. The supply, return fan and outside air CFM shall be monitored via air flow measure stations. Return air shall be calculated by BMS: supply airflow minus associated exhaust air systems.	

B.	Normal Occupied Mode	
1	Dew Point Control shall be used when outside air dew point is above discharge dew point 44°F (adj.).	
	a. Enthalpy wheel speed at 20 RPM b. Passive wheel speed at 0.25 RPM c. Wheel bypass dampers closed d. Supply air heating valve closed e. Cooling coil valve modulates to meet supply air dew point set point 44°F (adj.) and maximum supply air temperature set point of 60°F (adj.). f. Return heating coil valve to modulate to fully open if supply air dew point is 5°F above set point to boost dehumidification g. Supply fan to run on static pressure set point h. Exhaust fan to run based on CFM feedback from supply air duct	
2	Economizer control shall be used when the outdoor air dew point is equal to or below the supply air dew point set point and the outdoor air temperature is 35°F (adj.) and higher.	
	a. Enthalpy wheel speed to be 0.25 RPM b. Passive wheel speed to be 0.25 RPM c. Both wheel bypass dampers open d. Supply air heating valve to modulate to maintain 60°F discharge set point (adj.) e. Cooling coil valve closed f. Return heating coil valve closed g. Supply fan to run on static pressure set point h. Exhaust fan to run based on CFM feedback from supply air duct.	
3	Discharge air temperature control shall be used when the outdoor air temperature is below 35°F (adj.)	
	a. Enthalpy wheel speed to be reset with VFD to meet 60°F leaving air temperature set point (adj.) b. Passive wheel speed to be 0.25 RPM c. Wheel by pass dampers closed on enthalpy wheel d. Wheel by pass dampers open on passive wheel e. Supply air heating valve modules as second stage heat to maintain 60°F leaving air set point (adj.). f. Cooling coil valve closed g. Command heating coil control valve to fully open if supply air temperature drops below 60°F and if wheel frosting occurs on enthalpy wheel. h. Supply fan to run on static pressure set point i. Exhaust fan to run based on CFM feedback from supply air duct. j. Unit to shut down when supply air temperature is below 40°F (adj.) for more than 5 minutes (adj.)	

C.	**Scheduled Unoccupied Cooling Mode**	
1	a. Return and supply dampers open. Exhaust air and outside air dampers closed. Recirculating bypass damper open. Exhaust fan off. Supply fan on. b. VAV serving internal zones closed. VAV serving external zones shall open. VAV to modulate to meet room set point, after the zone chilled water valve closed. c. Supply fan to modulate to maintain duct static pressure d. Passive wheel to rotate to maintain lowest possible leaving air dew point e. Chilled water valve to modulate to meet discharge dew point. f. Return air heating valve to modulate to fully open if supply air dew point is 5°F above set point to boost dehumidification g. Space dew points shall maintain under 55°F in unoccupied mode.	
D.	**Scheduled Unoccupied Heating Mode**	
1	All dampers closed. All fans off. No ventilation required during unoccupied mode.	

	AHU - 3	**Pass Yes/No**
A.	**General**	
1	When system is off: All valves, dampers shall be in their normal position, except the heating control valve and freeze protection pump which shall modulate and run to maintain a plenum temperature of minimum 50 °F. The AHU associated unit mounted smoke isolation dampers shall be closed.	
2	When the system is commanded on, the following sequences occur:	
	a. The AHU startup shall be as scheduled or via BMS command.	
	b. The smoke dampers at in/outlet of the unit shall start to open to full.	
	c. The exhaust, outside air dampers shall slowly open.	
	d. After an adjustable time delay and the damper position switches at the unit prove all damper positions, the supply fan and return fan shall start in unison and slowly ramp up. Supply fans shall modulate to maintain the duct mounted air pressure setpoint (adj.) sensed by PDT.	
	e. The supply, return fan and outside air CFM shall be monitored via air flow measure stations. Return air shall be calculated by BMS: supply airflow minus associated exhaust air systems.	
B.	**Normal Occupied Mode**	
1	Dew Point Control shall be used when outside air dew point is above discharge dew point 44°F (adj.).	

	a. Enthalpy wheel speed at 20 RPM b. Passive wheel speed at 0.25 RPM c. Wheel bypass dampers closed d. Supply air heating valve closed e. Cooling coil valve modulates to meet supply air dew point set point 44°F (adj.) and maximum supply air temperature set point of 60°F (adj.). f. Return heating coil valve to modulate to fully open if supply air dew point is 5°F above set point to boost dehumidification g. Supply fan to run on static pressure set point h. Exhaust fan to run based on CFM feedback from supply air duct	
2	Economizer control shall be used when the outdoor air dew point is equal to or below the supply air dew point set point and the outdoor air temperature is 35°F (adj.) and higher.	
	a. Enthalpy wheel speed to be 0.25 RPM b. Passive wheel speed to be 0.25 RPM c. Both wheel bypass dampers open d. Supply air heating valve to modulate to maintain 60°F discharge set point (adj.) e. Cooling coil valve closed f. Return heating coil valve closed g. Supply fan to run on static pressure set point h. Exhaust fan to run based on CFM feedback from supply air duct.	
3	Discharge air temperature control shall be used when the outdoor air temperature is below 35°F (adj.)	
	a. Enthalpy wheel speed to be reset with VFD to meet 60°F leaving air temperature set point (adj.) b. Passive wheel speed to be 0.25 RPM c. Wheel by pass dampers closed on enthalpy wheel d. Wheel by pass dampers open on passive wheel e. Supply air heating valve modules as second stage heat to maintain 60°F leaving air set point (adj.). f. Cooling coil valve closed g. Command heating coil control valve to fully open if supply air temperature drops below 60°F and if wheel frosting occurs on enthalpy wheel. h. Supply fan to run on static pressure set point i. Exhaust fan to run based on CFM feedback from supply air duct. j. Unit to shut down when supply air temperature is below 40°F (adj.) for more than 5 minutes (adj.)	
C.	**Scheduled Unoccupied Cooling Mode**	
1	a. Return and supply dampers open. Exhaust air and outside air dampers closed. Recirculating bypass damper open. Exhaust fan off. Supply fan on. b. VAV serving internal zones closed. VAV serving external zones shall open. VAV to modulate to meet room set point, after the zone chilled water valve closed. c. Supply fan to modulate to maintain duct static pressure d. Passive wheel to rotate to maintain lowest possible leaving air dew point e. Chilled water valve to modulate to meet discharge dew point. f. Return air heating valve to modulate to fully open if supply air dew point is 5°F above set point to boost dehumidification g. Space dew points shall maintain under 55°F in unoccupied mode.	

D.	**Scheduled Unoccupied Heating Mode**	
1	All dampers closed. All fans off. No ventilation required during unoccupied mode.	

	AHU - 4	**Pass Yes/No**
A.	**General**	
1	When system is off: All valves, dampers shall be in their normal position, except the heating control valve and freeze protection pump which shall modulate and run to maintain a plenum temperature of minimum 50 °F. The AHU associated unit mounted smoke isolation dampers shall be closed.	
2	When the system is commanded on, the following sequences occur:	
	a. The AHU startup shall be as scheduled or via BMS command.	
	b. The smoke dampers at in/outlet of the unit shall start to open to full.	
	c. The exhaust, outside air dampers shall slowly open.	
	d. After an adjustable time delay and the damper position switches at the unit prove all damper positions, the supply fan and return fan shall start in unison and slowly ramp up. Supply fans shall modulate to maintain the duct mounted air pressure setpoint (adj.) sensed by PDT.	
	e. The supply, return fan and outside air CFM shall be monitored via air flow measure stations. Return air shall be calculated by BMS: supply airflow minus associated exhaust air systems.	
B.	**Normal Occupied Mode**	
1	Dew Point Control shall be used when outside air dew point is above discharge dew point 44°F (adj.).	
	a. Enthalpy wheel speed at 20 RPM b. Passive wheel speed at 0.25 RPM c. Wheel bypass dampers closed d. Supply air heating valve closed e. Cooling coil valve modulates to meet supply air dew point set point 44°F (adj.) and maximum supply air temperature set point of 60°F (adj.). f. Return heating coil valve to modulate to fully open if supply air dew point is 5°F above set point to boost dehumidification g. Supply fan to run on static pressure set point h. Exhaust fan to run based on CFM feedback from supply air duct	

2	Economizer control shall be used when the outdoor air dew point is equal to or below the supply air dew point set point and the outdoor air temperature is 35°F (adj.) and higher.	
	a. Enthalpy wheel speed to be 0.25 RPM b. Passive wheel speed to be 0.25 RPM c. Both wheel bypass dampers open d. Supply air heating valve to modulate to maintain 60°F discharge set point (adj.) e. Cooling coil valve closed f. Return heating coil valve closed g. Supply fan to run on static pressure set point h. Exhaust fan to run based on CFM feedback from supply air duct.	
3	Discharge air temperature control shall be used when the outdoor air temperature is below 35°F (adj.)	
	a. Enthalpy wheel speed to be reset with VFD to meet 60°F leaving air temperature set point (adj.) b. Passive wheel speed to be 0.25 RPM c. Wheel by pass dampers closed on enthalpy wheel d. Wheel by pass dampers open on passive wheel e. Supply air heating valve modules as second stage heat to maintain 60°F leaving air set point (adj.). f. Cooling coil valve closed g. Command heating coil control valve to fully open if supply air temperature drops below 60°F and if wheel frosting occurs on enthalpy wheel. h. Supply fan to run on static pressure set point i. Exhaust fan to run based on CFM feedback from supply air duct. j. Unit to shut down when supply air temperature is below 40°F (adj.) for more than 5 minutes (adj.)	
C.	**Scheduled Unoccupied Cooling Mode**	
1	a. Return and supply dampers open. Exhaust air and outside air dampers closed. Recirculating bypass damper open. Exhaust fan off. Supply fan on. b. VAV serving internal zones closed. VAV serving external zones shall open. VAV to modulate to meet room set point, after the zone chilled water valve closed. c. Supply fan to modulate to maintain duct static pressure d. Passive wheel to rotate to maintain lowest possible leaving air dew point e. Chilled water valve to modulate to meet discharge dew point. f. Return air heating valve to modulate to fully open if supply air dew point is 5°F above set point to boost dehumidification g. Space dew points shall maintain under 55°F in unoccupied mode.	
D.	**Scheduled Unoccupied Heating Mode**	
1	All dampers closed. All fans off. No ventilation required during unoccupied mode.	

	AHU – 5	Pass Yes/No
A.	**General**	
1	When system is off: All valves, dampers shall be in their normal position, except the heating control valve and freeze protection pump which shall modulate and run to maintain a plenum temperature of minimum 50 °F. The AHU associated unit mounted smoke isolation dampers shall be closed.	
2	When the system is commanded on, the following sequences occur:	
	a. The AHU startup shall be as scheduled or via BMS command.	
	b. The smoke dampers at in/outlet of the unit shall start to open to full.	
	c. The exhaust, outside air dampers shall slowly open.	
	d. After an adjustable time delay and the damper position switches at the unit prove all damper positions, the supply fan and return fan shall start in unison and slowly ramp up. Supply fans shall modulate to maintain the duct mounted air pressure setpoint (adj.) sensed by PDT.	
	e. The supply, return fan and outside air CFM shall be monitored via air flow measure stations. Return air shall be calculated by BMS: supply airflow minus associated exhaust air systems.	
B.	**Normal Occupied Mode**	
1	Dew Point Control shall be used when outside air dew point is above discharge dew point 44°F (adj.).	
	a. Enthalpy wheel speed at 20 RPM b. Passive wheel speed at 0.25 RPM c. Wheel bypass dampers closed d. Supply air heating valve closed e. Cooling coil valve modulates to meet supply air dew point set point 44°F (adj.) and maximum supply air temperature set point of 60°F (adj.). f. Return heating coil valve to modulate to fully open if supply air dew point is 5°F above set point to boost dehumidification g. Supply fan to run on static pressure set point h. Exhaust fan to run based on CFM feedback from supply air duct	
2	Economizer control shall be used when the outdoor air dew point is equal to or below the supply air dew point set point and the outdoor air temperature is 35°F (adj.) and higher.	

	a. Enthalpy wheel speed to be 0.25 RPM b. Passive wheel speed to be 0.25 RPM c. Both wheel bypass dampers open d. Supply air heating valve to modulate to maintain 60°F discharge set point (adj.) e. Cooling coil valve closed f. Return heating coil valve closed g. Supply fan to run on static pressure set point h. Exhaust fan to run based on CFM feedback from supply air duct.	
3	Discharge air temperature control shall be used when the outdoor air temperature is below 35°F (adj.)	
	a. Enthalpy wheel speed to be reset with VFD to meet 60°F leaving air temperature set point (adj.) b. Passive wheel speed to be 0.25 RPM c. Wheel by pass dampers closed on enthalpy wheel d. Wheel by pass dampers open on passive wheel e. Supply air heating valve modules as second stage heat to maintain 60°F leaving air set point (adj.). f. Cooling coil valve closed g. Command heating coil control valve to fully open if supply air temperature drops below 60°F and if wheel frosting occurs on enthalpy wheel. h. Supply fan to run on static pressure set point i. Exhaust fan to run based on CFM feedback from supply air duct. j. Unit to shut down when supply air temperature is below 40°F (adj.) for more than 5 minutes (adj.)	
C.	**Scheduled Unoccupied Cooling Mode**	
1	a. Return and supply dampers open. Exhaust air and outside air dampers closed. Recirculating bypass damper open. Exhaust fan off. Supply fan on. b. VAV serving internal zones closed. VAV serving external zones shall open. VAV to modulate to meet room set point, after the zone chilled water valve closed. c. Supply fan to modulate to maintain duct static pressure d. Passive wheel to rotate to maintain lowest possible leaving air dew point e. Chilled water valve to modulate to meet discharge dew point. f. Return air heating valve to modulate to fully open if supply air dew point is 5°F above set point to boost dehumidification g. Space dew points shall maintain under 55°F in unoccupied mode.	
D.	**Scheduled Unoccupied Heating Mode**	
1	All dampers closed. All fans off. No ventilation required during unoccupied mode.	

END OF TEST

Pre-Functional Checklist

Project: OGS SOB Building #4 – OGS #45124

Project No. 11123671

SECTION: 237413

AIR CONDITIONERS

1. Submittal / Approvals

Submittal. The above equipment and systems integral to them are complete and ready for functional testing. This pre-functional checklist is submitted for approval, subject to an attached list of outstanding items yet to be completed. A Statement of Correction will be submitted upon completion of any outstanding areas. None of the outstanding items preclude safe and reliable functional tests being performed.

HVAC Contractor	Date	Construction Contractor	Date

Pre-functional checklist items are to be completed as part of startup & initial checkout, preparatory to functional testing.

- This checklist does not take the place of the manufacturer's recommended checkout and startup procedures or report
- If this form is not used for documenting, one of similar rigor shall be used
- Contractors assigned responsibility for sections of the checklist shall be responsible to see that checklist items by their subcontractors are completed and checked off

Approvals. This filled-out checklist has been reviewed. Its completion is approved with the exceptions noted below.

Commissioning Agent	Date	Director's Representative	Date

2. Requested documentation submitted

Equip Tag--->	ACU–1	ACU–2
Manufacturer's cut sheets		
Performance data (fan curves, coil data, etc.)		
O&M manuals		

3. Model verification

Equip Tag--->	ACU – 1	ACU – 2
Manufacturer		
Model		
Serial #		
Heating Capacity (MBH)		
Cooling Capacity (MBH)		
Air Filter Type (MERV)		
Supply Fan		
Manufacturer		
Model		
Volts/Ph/Hz		
Amps		
HP		
RPM		
CFM		
Efficiency		
VFD		
Manufacturer		
Model		
HP rating		
Voltage rating		

4. Installation Checks

Equip Tag--->	ACU – 1	ACU – 2
Cabinet and General Installation		
Permanent labels affixed, including for fans		
Casing condition good: no dents, leaks,		
Door gaskets installed and in good condition		
Access doors close tightly - no leaks		
Boot between duct and unit tight and in good condition		
Vibration isolation equipment installed & released from shipping locks		
Maintenance access acceptable for unit and components		
Sound attenuation installed		
Instrumentation installed according to specification (thermometers, pressure gages, flow meters, etc.)		
Clean up of equipment completed per contract documents		
Filters installed and replacement type and efficiency permanently affixed to housing--construction filters removed		
Valves, Piping and Coils		
No leaking apparent around fittings		
All coils are clean and fins are in good condition		
All condensate drain pans clean and slope to drain		
Sensors properly located and secure		
Motors: Premium efficiency verified, if spec'd?		
Pressure and temperature gauges installed per drawings		
Fans and Dampers		
Supply fan and motor alignment correct		
Supply fan belt tension and condition good, correct number of belts		
Supply fan protective shrouds for belts in place and secure		
Supply fan area clean		

Equip Tag--->	ACU – 1	ACU – 2
Supply fan and motor properly lubricated		
Filters clean and tight fitting		
Filter pressure differential measuring device installed and functional (magnahelic, inclined manometer, etc.)		
Smoke and fire dampers installed properly per contract docs (proper location, access doors)		
All damper linkages have minimum play		
All dampers close tightly		
Low limit freeze stat sensor located to deal with stratification & bypass		
Ducts		
Duct joint sealant properly installed		
No apparent severe duct restrictions		
Turning vanes in square elbows as per drawings		
Balancing dampers installed as per drawings		
Any OSA intakes located away from pollutant sources & exhaust outlets		
Pressure leakage tests completed		
Branch duct control dampers operable		
Ducts cleaned as per spec's		
Electrical and Controls		
Power disconnects in place and labeled		
All electric connections tight		
Proper grounding installed for components and unit		
Safeties in place and operable		
Starter overload breakers installed and correct size		
Control system interlocks hooked up and functional		
All control devices, pneumatic tubing and wiring complete		
VFD		
VFD powered (wired to controlled equipment)		
VFD interlocked to control system		

Equip Tag--->	ACU – 1	ACU – 2
Static pressure or other controlling sensor properly located and per drawings and calibrated		
Static pressure or other controlling sensor calibrated		
Drive location not subject to excessive temperatures		
Drive location not subject to excessive moisture or dirt		
Drive size matches motor sizes		
TAB		
Installation of system and balancing devices allowed balancing to be completed following specified NEBB or AABC procedures and contract documents		
Final		
Smoke and fire dampers and unpowered TU's are open		
Startup report completed with this checklist attached		
Safeties installed and safe operating ranges for this equipment provided to the commissioning agent		
If unit is started and will be running during construction: have quality filters on RA grills, etc. to minimize dirt in the ductwork and coils and in any finished areas. Verify moisture migration is not a problem, due to improper pressures between spaces.		

5. Operational Checks

Equip Tag--->	ACU – 1	ACU – 2
Supply fan rotation correct		
Supply fan has no unusual noise or vibration		
All dampers stroke fully without binding and spans calibrated and BAS reading site verified (follow procedure in Calibration and Leak-by Test Procedures)		
Valves stroke fully and easily and spanning is calibrated (follow procedure in Calibration and Leak-by Test Procedures).		
Valves verified to not be leaking through coils when closed at normal operating pressure (follow procedure in Calibration and Leak-by Test Procedures).		
The HOA switch properly activates and deactivates the unit		
Specified sequences of operation and operating schedules have been implemented with all variations documented		
Specified point-to-point checks have been completed and documentation record submitted for this system		

END OF CHECKLIST

Functional Test

Project: OGS SOB Building #4 – OGS #45124

Project No. 11123671

SECTION: 237413

AIR CONDITIONERS

1. Submittal / Approvals

Submittal: The equipment and systems integral have undergone functional testing. The checklist items are complete and have been checked off only by parties having direct knowledge of the event, as marked below, respective to each responsible contractor. This functional checklist is submitted for approval, subject to an attached list of outstanding items yet to be completed. A Statement of Correction will be submitted upon completion of any outstanding areas.

HVAC Contractor	Date	Construction Contractor	Date

Approvals: This filled-out checklist has been reviewed. Its completion is approved with exceptions noted below.

Commissioning Agent	Date	Director's Representative	Date

1. Prerequisite Checklist

a. ____ The Pre-functional checklist is complete and the unit is ready for functional testing
b. ____ All A/E punchlist items for this equipment are corrected
c. ____ Safeties and operating ranges reviewed
d. ____ Sufficient clearance around equipment for servicing
e. ____ O&M Manuals provided
f. ____ These functional test procedures reviewed and approved by installing contractor and vendors

Parameter	ACU-1 Pre-Test Values	ACU-2 Pre-Test Values
Discharge air static pressure		
Discharge air temperature		
Discharge air reset schedule		
Building static pressure		
Dirty filter differential pressure		
Outside air CFM		

Sensor	Location	Gage or BAS Value	Instrument Measured Value
DAT			
RAT			
OAT			
Discharge SP			

2. Functional Testing Record

	ACU- 1	Pass Yes/No
A.	**General**	
1	a. The AHU startup shall be as scheduled or via BMS command. b. The smoke dampers at in/outlet of the unit shall start to open to full. c. The exhaust, outside air dampers shall slowly open. d. After an adjustable time delay and the damper position switches at the unit prove all damper positions, the supply fan and return fan shall start in unison and slowly ramp up. Supply fans shall modulate to maintain the duct mounted air pressure setpoint (adj.) sensed by PDT. e. The supply, return fan and outside air CFM shall be monitored via air flow measure stations. Return air shall be calculated by BMS: supply airflow minus associated exhaust air systems.	
2	Room Set point: Maximum 94°F (adj.), minimum 60°F (adj.). The room temperature shall not exceed 104°F or below 55°F	
3	When outside air temperature is above 94°F (adj.), outside air damper shall close, return air damper shall open, air conditioning unit fan shall run, chilled water control valve shall modulate to maintain the space set point below 94°F (adj.).	
4	When outside air temperature is between 45°F (adj.) and 90°F (adj.), outside air damper shall open, return air damper shall close, air conditioning unit fan shall run, chilled water control valve shall modulate to maintain the space set point below 94°F (adj.). If room temperature falls below 55°F, fan shall stop, and all dampers shall close.	
5	When outside air temperature is below 45°F (adj.), outside air damper shall close, return air damper shall open. If room temperature is lower than 60°F (adj.), electrical heater shall modulate to maintain the space above set point 60°F (adj.).	
6	When outside air temperature is below 45°F (adj.), indoor temperature is higher than 90°F (adj.), outside air and return air damper shall modulate to the ensure the mixed supply air temperature is 45°F (adj.) minimum.	
7	When space temperature is ±5°F (adj.) of set point for more than 10 minutes (adj.), an alarm shall be generated at BMS.	

	ACU-2	Pass Yes/No
A.	**General**	
1	a. The AHU startup shall be as scheduled or via BMS command. b. The smoke dampers at in/outlet of the unit shall start to open to full. c. The exhaust, outside air dampers shall slowly open. d. After an adjustable time delay and the damper position switches at the unit prove all damper positions, the supply fan and return fan shall start in unison and slowly ramp up. Supply fans shall modulate to maintain the duct mounted air pressure setpoint (adj.) sensed by PDT. e. The supply, return fan and outside air CFM shall be monitored via air flow measure stations. Return air shall be calculated by BMS: supply airflow minus associated exhaust air systems.	
2	Room Set point: Maximum 94°F (adj.), minimum 60°F (adj.). The room temperature shall not exceed 104°F or below 55°F	
3	When outside air temperature is above 94°F (adj.), outside air damper shall close, return air damper shall open, air conditioning unit fan shall run, chilled water control valve shall modulate to maintain the space set point below 94°F (adj.).	
4	When outside air temperature is between 45°F (adj.) and 90°F (adj.), outside air damper shall open, return air damper shall close, air conditioning unit fan shall run, chilled water control valve shall modulate to maintain the space set point below 94°F (adj.). If room temperature falls below 55°F, fan shall stop, and all dampers shall close.	
5	When outside air temperature is below 45°F (adj.), outside air damper shall close, return air damper shall open. If room temperature is lower than 60°F (adj.), electrical heater shall modulate to maintain the space above set point 60°F (adj.).	
6	When outside air temperature is below 45°F (adj.), indoor temperature is higher than 90°F (adj.), outside air and return air damper shall modulate to the ensure the mixed supply air temperature is 45°F (adj.) minimum.	
7	When space temperature is ±5°F (adj.) of set point for more than 10 minutes (adj.), an alarm shall be generated at BMS.	

END OF TEST

Pre-Functional Checklist

Project: OGS SOB Building #4 – OGS #45124

Project No. 11123671

SECTION: 238113

AIR CONDITIONERS-DATA AND ELECTRICAL CLOSETS

1. Submittal / Approvals

Submittal. The above equipment and systems integral to them are complete and ready for functional testing. This pre-functional checklist is submitted for approval, subject to an attached list of outstanding items yet to be completed. A Statement of Correction will be submitted upon completion of any outstanding areas. None of the outstanding items preclude safe and reliable functional tests being performed.

Mechanical Contractor	Date	Construction Manager	Date

Pre-functional checklist items are to be completed as part of startup & initial checkout, preparatory to functional testing.

- This checklist does not take the place of the manufacturer's recommended checkout and startup procedures or report
- If this form is not used for documenting, one of similar rigor shall be used
- Contractors assigned responsibility for sections of the checklist shall be responsible to see that checklist items by their subcontractors are completed and checked off

Approvals. This filled-out checklist has been reviewed. Its completion is approved with the exceptions noted below.

Commissioning Authority	Date	Owner's Representative	Date

2. Requested Documentation Submitted

Equipment No.--->	AC Units (Indoor)	DC-1 Unit (Outdoor)
Manufacturer's cut sheets		
Performance data		
O&M manuals		

3. Model Verification

Indoor Unit	AC-1-1	AC-1-2	AC-1-3	AC-1-4	AC-1-5
Location					
Manufacturer					
Model No.					
Serial No.					
Volts / Ph / Hz					
Amps					
CFM					

Indoor Unit	AC-1-6	AC-1-7	AC-2-1	AC-2-2	AC-2-3
Location					
Manufacturer					
Model No.					
Serial No.					
Volts / Ph / Hz					
Amps					
CFM					

Indoor Unit	AC-2-4	AC-3-1	AC-3-2	AC-3-3	AC-3-4
Location					
Manufacturer					
Model No.					
Serial No.					
Volts / Ph / Hz					
Amps					
CFM					

Outdoor Unit	DC-1
Location	
Manufacturer	
Model No.	
Serial No.	
Volts / Ph / Hz	
Amps	
SEER	
Capacity (Tons)	
Glycol %	

4. Physical Installation Check

No.	Equipment No.--->	AC							
		1-1	1-2	1-3	1-4	1-5	1-6	1-7	2-1
	General Installation								
1	General appearance good; no apparent damage								
2	Access door close tightly								
3	Equipment labels affixed								
4	Service and access space adequate								
5	Insulation: Insulate interior surfaces of casing panels with 1/2 inch glass fiber meeting NFPA 90A requirements								
6	Mounting/support system and vibration isolation								
7	Freedom of rotation								
8	Remote controller available								
9	New filters installed with replacement type & efficiency affixed to housing								
10	Power failure auto restart								
11	Clean up of equipment completed as per contract documents								
	Piping and Coils								
12	Piping complete								
13	System has been leak tested, no leaking apparent around fittings								
14	Piping insulated								
15	All coils are clean and fins are in good condition								
16	Condensate pump installed								

No.	Equipment No.--->	AC							
		1-1	1-2	1-3	1-4	1-5	1-6	1-7	2-1
	Electrical and Controls								
17	Electric wiring complete								
18	All electrical connections tight								
19	Proper grounding installed for components and unit								
20	Wiring not in touch with the refrigerant tubing, compressor or any moving parts of the fan								
21	Disconnect switch (tested) and labeled								
22	Circuit breaker with overcurrent protection is provided								
23	Instrumentation and controls are installed according to spec's								
24	Unit mounted line voltage thermostats, and unit mounted speed controller with off position								
25	Control system – point-to-point checks complete								

No.	Equipment No.--->	AC							
		2-2	2-3	2-4	3-1	3-2	3-3	3-4	
	General Installation								
1	General appearance good; no apparent damage								
2	Access door close tightly								
3	Equipment labels affixed								
4	Service and access space adequate								
5	Insulation: Insulate interior surfaces of casing panels with 1/2 inch glass fiber meeting NFPA 90A requirements								
6	Mounting/support system and vibration isolation								

No.	Equipment No.--->	AC							
		2-2	2-3	2-4	3-1	3-2	3-3	3-4	
7	Freedom of rotation								
8	Remote controller available								
9	New filters installed with replacement type & efficiency affixed to housing								
10	Power failure auto restart								
11	Clean up of equipment completed as per contract documents								
	Piping and Coils								
12	Piping complete								
13	System has been leak tested, no leaking apparent around fittings								
14	Piping insulated								
15	All coils are clean and fins are in good condition								
16	Condensate pump installed								
	Electrical and Controls								
17	Electric wiring complete								
18	All electrical connections tight								
19	Proper grounding installed for components and unit								
20	Wiring not in touch with the refrigerant tubing, compressor or any moving parts of the fan								
21	Disconnect switch (tested) and labeled								
22	Circuit breaker with overcurrent protection is provided								
23	Instrumentation and controls are installed according to spec's								

No.	Equipment No.--->	AC							
		2-2	2-3	2-4	3-1	3-2	3-3	3-4	
24	Unit mounted line voltage thermostats, and unit mounted speed controller with off position								
25	Control system – point-to-point checks complete								

No.	Equipment No.--->	DC-1							
	General Installation								
1	General appearance good; no apparent damage								
2	Access panel close tightly								
3	Equipment labels affixed								
4	Service and access space adequate								
5	Mounting/support system and vibration isolation								
6	Freedom of rotation								
7	Concrete pad or roof curb installed; unit secured to base.								
8	System has been leak tested								
9	New filters installed with replacement type & efficiency affixed to housing								
10	Power failure auto restart								
11	Clean up of equipment completed as per contract documents								
12	Low sound level, anti-corrosion coating								
	Piping and Coils								
13	Piping complete and glycol added								

No.	Equipment No.--->	DC-1							
14	No leaking apparent around fittings								
15	Piping insulated								
16	All coils are clean and fins are in good condition								
	Electrical and Controls								
17	Electric wiring complete								
18	Disconnect switch (tested) and labeled								
19	All electrical connections tight								
20	Proper grounding installed for components and unit								
21	Safeties in place and operable								
22	Instrumentation and controls are installed according to spec's								
23	Control system – point-to-point checks complete								

5. Operational Checks

No.	AC Unit Equipment No.--->	1-1	1-2	1-3	1-4	1-5	1-6
1	Electrical interlocks - Start / Stop						
2	Vibration & noise level acceptable						

No.	AC Unit Equipment No.--->	1-7	2-1	2-2	2-3	2-4	3-1
1	Electrical interlocks - Start / Stop						
2	Vibration & noise level acceptable						

No.	AC Unit Equipment No.--->	3-1	3-3	3-4
1	Electrical interlocks - Start / Stop			
2	Vibration & noise level acceptable			

END OF CHECKLIST

Functional Test

Project: OGS SOB Building #4 – OGS #45124

Project No. 11123671

SECTION: 238113

AIR CONDITIONERS-DATA AND ELECTRICAL CLOSETS

1. Submittal / Approvals

Submittal: The equipment and systems integral have undergone functional testing. The checklist items are complete and have been checked off only by parties having direct knowledge of the event, as marked below, respective to each responsible contractor. This functional checklist is submitted for approval, subject to an attached list of outstanding items yet to be completed. A Statement of Correction will be submitted upon completion of any outstanding areas.

_____	_____	_____	_____
Mechanical Contractor	Date	Construction Manager	Date

Approvals: This filled-out checklist has been reviewed. Its completion is approved with exceptions noted below.

_____	_____	_____	_____
Commissioning Authority	Date	Owner's Representative	Date

1. Prerequisite Checklist

a. _____ All control system functions for this systems are programmed and operable per Contract Documents

b. _____ Piping system flushing complete

c. _____ Water treatment system is complete and operational

d. _____ Testing, Adjusting & Balance (TAB) complete and approved for the hydronic system

e. _____ All A/E punchlist items for this equipment corrected

f. _____ These functional test procedures reviewed and approved by installing contractor

g. _____ O&M manuals provided

h. _____ Sufficient clearance around equipment for servicing

2. Testing Procedures and Records

Indoor Units

No	Test Procedure	Pass Y/N
A	**AC-1-1**	
1	Unit controls cycles fan and sequences cooling.	
2	Room Set point: Maximum 84°F (adj.), minimum 60°F (adj.). The room temperature shall not exceed 94°F.	
3	Each room controller with BACNet communication card shall provide BMS interface. Each room shall be monitored and controllable on BMS.	
4	Alarm: High room temperature and humidity, condensate overflow.	
B	**AC-1-2**	
1	Unit controls cycles fan and sequences cooling.	
2	Room Set point: Maximum 84°F (adj.), minimum 60°F (adj.). The room temperature shall not exceed 94°F.	
3	Each room controller with BACNet communication card shall provide BMS interface. Each room shall be monitored and controllable on BMS.	
4	Alarm: High room temperature and humidity, condensate overflow.	
C	**AC-1-3**	
1	Unit controls cycles fan and sequences cooling.	
2	Room Set point: Maximum 84°F (adj.), minimum 60°F (adj.). The room temperature shall not exceed 94°F.	
3	Each room controller with BACNet communication card shall provide BMS interface. Each room shall be monitored and controllable on BMS.	
4	Alarm: High room temperature and humidity, condensate overflow.	
D	**AC-1-4**	
1	Unit controls cycles fan and sequences cooling.	
2	Room Set point: Maximum 84°F (adj.), minimum 60°F (adj.). The room temperature shall not exceed 94°F.	
3	Each room controller with BACNet communication card shall provide BMS interface. Each room shall be monitored and controllable on BMS.	
4	Alarm: High room temperature and humidity, condensate overflow.	
E	**AC-1-5**	
1	Unit controls cycles fan and sequences cooling.	
2	Room Set point: Maximum 84°F (adj.), minimum 60°F (adj.). The room temperature shall not exceed 94°F.	

No	Test Procedure	Pass Y/N
3	Each room controller with BACNet communication card shall provide BMS interface. Each room shall be monitored and controllable on BMS.	
4	Alarm: High room temperature and humidity, condensate overflow.	
F	**AC-1-6 (Duty)**	
1	MDF room is served by duty/standby unit.	
2	Unit controls cycles fan and sequences cooling.	
3	Room Set point: Maximum 84°F (adj.), minimum 60°F (adj.). The room temperature shall not exceed 94°F.	
4	Each room controller with BACNet communication card shall provide BMS interface. Each room shall be monitored and controllable on BMS.	
5	Alarm: High room temperature and humidity, condensate overflow.	
G	**AC-1-7 (Standby)**	
1	MDF room is served by duty/standby unit.	
2	Unit controls cycles fan and sequences cooling.	
3	Room Set point: Maximum 84°F (adj.), minimum 60°F (adj.). The room temperature shall not exceed 94°F.	
4	Each room controller with BACNet communication card shall provide BMS interface. Each room shall be monitored and controllable on BMS.	
5	Alarm: High room temperature and humidity, condensate overflow.	
H	**AC-2-1**	
1	Unit controls cycles fan and sequences cooling.	
2	Room Set point: Maximum 84°F (adj.), minimum 60°F (adj.). The room temperature shall not exceed 94°F.	
3	Each room controller with BACNet communication card shall provide BMS interface. Each room shall be monitored and controllable on BMS.	
4	Alarm: High room temperature and humidity, condensate overflow.	
I	**AC-2-2**	
1	Unit controls cycles fan and sequences cooling.	
2	Room Set point: Maximum 84°F (adj.), minimum 60°F (adj.). The room temperature shall not exceed 94°F.	
3	Each room controller with BACNet communication card shall provide BMS interface. Each room shall be monitored and controllable on BMS.	
4	Alarm: High room temperature and humidity, condensate overflow.	

No	Test Procedure	Pass Y/N
J	**AC-2-3**	
1	Unit controls cycles fan and sequences cooling.	
2	Room Set point: Maximum 84°F (adj.), minimum 60°F (adj.). The room temperature shall not exceed 94°F.	
3	Each room controller with BACNet communication card shall provide BMS interface. Each room shall be monitored and controllable on BMS.	
4	Alarm: High room temperature and humidity, condensate overflow.	
K	**AC-2-4**	
1	Unit controls cycles fan and sequences cooling.	
2	Room Set point: Maximum 84°F (adj.), minimum 60°F (adj.). The room temperature shall not exceed 94°F.	
3	Each room controller with BACNet communication card shall provide BMS interface. Each room shall be monitored and controllable on BMS.	
4	Alarm: High room temperature and humidity, condensate overflow.	
L	**AC-3-1**	
1	Unit controls cycles fan and sequences cooling.	
2	Room Set point: Maximum 84°F (adj.), minimum 60°F (adj.). The room temperature shall not exceed 94°F.	
3	Each room controller with BACNet communication card shall provide BMS interface. Each room shall be monitored and controllable on BMS.	
4	Alarm: High room temperature and humidity, condensate overflow.	
M	**AC-3-2**	
1	Unit controls cycles fan and sequences cooling.	
2	Room Set point: Maximum 84°F (adj.), minimum 60°F (adj.). The room temperature shall not exceed 94°F.	
3	Each room controller with BACNet communication card shall provide BMS interface. Each room shall be monitored and controllable on BMS.	
4	Alarm: High room temperature and humidity, condensate overflow.	
N	**AC-3-3**	
1	Unit controls cycles fan and sequences cooling.	
2	Room Set point: Maximum 84°F (adj.), minimum 60°F (adj.). The room temperature shall not exceed 94°F.	
3	Each room controller with BACNet communication card shall provide BMS interface. Each room shall be monitored and controllable on BMS.	

No	Test Procedure	Pass Y/N
4	Alarm: High room temperature and humidity, condensate overflow.	
O	**AC-3-4**	
1	Unit controls cycles fan and sequences cooling.	
2	Room Set point: Maximum 84°F (adj.), minimum 60°F (adj.). The room temperature shall not exceed 94°F.	
3	Each room controller with BACNet communication card shall provide BMS interface. Each room shall be monitored and controllable on BMS.	
4	Alarm: High room temperature and humidity, condensate overflow.	

Outdoor Unit

No	Test Procedure	Pass Y/N
A	**DC-1**	
1	Unit controls cycles fan and sequences cooling.	
2	Alarms: Remote Dry cooler pump alarm, and glycol water temperature monitoring.	

END OF TEST

Pre-Functional Checklist

Project: OGS SOB Building #4 – OGS #45124

Project No. 11123671

SECTION: 238126

SPLIT SYSTEM AIR CONDITIONERS

1. Submittal / Approvals

Submittal. The above equipment and systems integral to them are complete and ready for functional testing. This pre-functional checklist is submitted for approval, subject to an attached list of outstanding items yet to be completed. A Statement of Correction will be submitted upon completion of any outstanding areas. None of the outstanding items preclude safe and reliable functional tests being performed.

Mechanical Contractor	Date	Construction Manager	Date

Pre-functional checklist items are to be completed as part of startup & initial checkout, preparatory to functional testing.

- This checklist does not take the place of the manufacturer's recommended checkout and startup procedures or report
- If this form is not used for documenting, one of similar rigor shall be used
- Contractors assigned responsibility for sections of the checklist shall be responsible to see that checklist items by their subcontractors are completed and checked off

Approvals. This filled-out checklist has been reviewed. Its completion is approved with the exceptions noted below.

Commissioning Authority	Date	Owner's Representative	Date

2. Requested Documentation Submitted

Equipment No.--->	AC-C Units (Indoor)	AC-S Units (Indoor)	ACC Units (Outdoor)
Manufacturer's cut sheets			
Performance data			
O&M manuals			

3. Model Verification

Indoor Unit	AC-C-1	AC-C-2	AC-C-3	AC-C-4	AC-C-5	AC-C-6
Location Served						
Manufacturer						
Model No.						
Serial No.						
Volts / Ph / Hz						
Amps						
CFM						

3. Model Verification (Continued)

Indoor Unit	AC-C-7	AC-C-8	AC-C-9	AC-C-10	AC-C-11	AC-C-12
Location Served						
Manufacturer						
Model No.						
Serial No.						
Volts / Ph / Hz						
Amps						
CFM						

3. Model Verification (Continued)

Indoor Unit	AC-C-13	AC-C-14	AC-C-15	AC-C-16	AC-C-17	AC-C-18
Location Served						
Manufacturer						
Model No.						
Serial No.						
Volts / Ph / Hz						
Amps						
CFM						

3. Model Verification (Continued)

Indoor Unit	AC-C-19	AC-C-20	AC-C-21	AC-C-22	AC-C-23	AC-C-24
Location Served						
Manufacturer						
Model No.						
Serial No.						
Volts / Ph / Hz						
Amps						
CFM						

3. Model Verification (Continued)

Indoor Unit	AC-C-25	AC-S-1	AC-S-2
Location Served			
Manufacturer			
Model No.			
Serial No.			
Volts / Ph / Hz			
Amps			
CFM			

3. Model Verification (Continued)

Outdoor Unit	ACC-C-1	ACC-C-2	ACC-S
Location / Service			
Manufacturer			
Model No.			
Serial No.			
Volts / Ph / Hz			
Amps			
SEER			
Cooling / Heating Capacity (Tons)	/	/	/
Refrigerant			

4. Physical Installation Check

No.	Equipment No.--->	VRV System							
		AC-C-1	AC-C-2	AC-C-3	AC-C-3	AC-C-4	AC-C-5	AC-C-6	AC-C-7
	General Installation								
1	General appearance good; no apparent damage								
2	Access door close tightly								
3	Equipment labels affixed								
4	Service and access space adequate								
5	Insulation: Insulate interior surfaces of casing panels with 1/2 inch glass fiber meeting NFPA 90A requirements								
6	Mounting/support system and vibration isolation								
7	Freedom of rotation								
8	Remote controller available								
9	New filters installed with replacement type & efficiency affixed to housing								
10	Power failure auto restart								
11	Clean up of equipment completed as per contract documents								
	Piping and Coils								
12	Refrigerant piping complete and charged								
13	System has been leak tested, no leaking apparent around fittings								
14	Piping insulated								

No.	Equipment No.--->	VRV System							
		AC-C-1	AC-C-2	AC-C-3	AC-C-3	AC-C-4	AC-C-5	AC-C-6	AC-C-7
15	All coils are clean and fins are in good condition								
16	Condensate pump installed								
	Electrical and Controls								
17	Electric wiring complete								
18	All electrical connections tight								
19	Proper grounding installed for components and unit								
20	Wiring not in touch with the refrigerant tubing, compressor or any moving parts of the fan								
21	Disconnect switch (tested) and labeled								
22	Circuit breaker with overcurrent protection is provided								
23	Instrumentation and controls are installed according to spec's								
24	Unit mounted line voltage thermostats, and unit mounted speed controller with off position								
25	Control system – point-to-point checks complete								

4. Physical Installation Check Continued

No.	Equipment No.--->	VRV System							
		AC-C-8	AC-C-9	AC-C-10	AC-C-11	AC-C-12	AC-C-13	AC-C-14	AC-C-15
	General Installation								
1	General appearance good; no apparent damage								
2	Access door close tightly								
3	Equipment labels affixed								

No.	Equipment No.--->	VRV System							
		AC-C-8	AC-C-9	AC-C-10	AC-C-11	AC-C-12	AC-C-13	AC-C-14	AC-C-15
4	Service and access space adequate								
5	Insulation: Insulate interior surfaces of casing panels with 1/2 inch glass fiber meeting NFPA 90A requirements								
6	Mounting/support system and vibration isolation								
7	Freedom of rotation								
8	Remote controller available								
9	New filters installed with replacement type & efficiency affixed to housing								
10	Power failure auto restart								
11	Clean up of equipment completed as per contract documents								
	Piping and Coils								
12	Refrigerant piping complete and charged								
13	System has been leak tested, no leaking apparent around fittings								
14	Piping insulated								
15	All coils are clean and fins are in good condition								
16	Condensate pump installed								
	Electrical and Controls								
17	Electric wiring complete								
18	All electrical connections tight								
19	Proper grounding installed for components and unit								

No.	Equipment No.--->	VRV System							
		AC-C-8	AC-C-9	AC-C-10	AC-C-11	AC-C-12	AC-C-13	AC-C-14	AC-C-15
20	Wiring not in touch with the refrigerant tubing, compressor or any moving parts of the fan								
21	Disconnect switch (tested) and labeled								
22	Circuit breaker with overcurrent protection is provided								
23	Instrumentation and controls are installed according to spec's								
24	Unit mounted line voltage thermostats, and unit mounted speed controller with off position								
25	Control system – point-to-point checks complete								

4. Physical Installation Check Continued

No.	Equipment No.--->	VRV System							
		AC-C-16	AC-C-17	AC-C-18	AC-C-19	AC-C-20	AC-C-21	AC-C-22	AC-C-23
	General Installation								
1	General appearance good; no apparent damage								
2	Access door close tightly								
3	Equipment labels affixed								
4	Service and access space adequate								
5	Insulation: Insulate interior surfaces of casing panels with 1/2 inch glass fiber meeting NFPA 90A requirements								
6	Mounting/support system and vibration isolation								
7	Freedom of rotation								
8	Remote controller available								

No.	Equipment No.--->	VRV System							
		AC-C-16	AC-C-17	AC-C-18	AC-C-19	AC-C-20	AC-C-21	AC-C-22	AC-C-23
9	New filters installed with replacement type & efficiency affixed to housing								
10	Power failure auto restart								
11	Clean up of equipment completed as per contract documents								
	Piping and Coils								
12	Refrigerant piping complete and charged								
13	System has been leak tested, no leaking apparent around fittings								
14	Piping insulated								
15	All coils are clean and fins are in good condition								
16	Condensate pump installed								
	Electrical and Controls								
17	Electric wiring complete								
18	All electrical connections tight								
19	Proper grounding installed for components and unit								
20	Wiring not in touch with the refrigerant tubing, compressor or any moving parts of the fan								
21	Disconnect switch (tested) and labeled								
22	Circuit breaker with overcurrent protection is provided								
23	Instrumentation and controls are installed according to spec's								

24	Unit mounted line voltage thermostats, and unit mounted speed controller with off position								
25	Control system – point-to-point checks complete								

4. Physical Installation Check Continued

No.	**Equipment No.--->**	**VRV System**						
		AC-C-24	**AC-C-25**	**AC-S-1**	**AC-S-2**	**ACC-C-1**	**ACC-C-2**	**ACC-S**
	General Installation							
1	General appearance good; no apparent damage							
2	Access door close tightly							
3	Equipment labels affixed							
4	Service and access space adequate							
5	Insulation: Insulate interior surfaces of casing panels with 1/2 inch glass fiber meeting NFPA 90A requirements							
6	Mounting/support system and vibration isolation							
7	Freedom of rotation							
8	Remote controller available							
9	New filters installed with replacement type & efficiency affixed to housing							
10	Power failure auto restart							
11	Clean up of equipment completed as per contract documents							

	Piping and Coils							
12	Refrigerant piping complete and charged							
13	System has been leak tested, no leaking apparent around fittings							
14	Piping insulated							
15	All coils are clean and fins are in good condition							
16	Condensate pump installed							
	Electrical and Controls							
17	Electric wiring complete							
18	All electrical connections tight							
19	Proper grounding installed for components and unit							
20	Wiring not in touch with the refrigerant tubing, compressor or any moving parts of the fan							
21	Disconnect switch (tested) and labeled							
22	Circuit breaker with overcurrent protection is provided							
23	Instrumentation and controls are installed according to spec's							
24	Unit mounted line voltage thermostats, and unit mounted speed controller with off position							
25	Control system – point-to-point checks complete							

5. Operational Checks

No.	Equipment No.--->	AC-C-1	AC-C-2	AC-C-3	AC-C-4	AC-C-5	AC-C-6
	Associated ACC Unit --->	ACC-C-1	ACC-C-1	ACC-C-2	ACC-C-2	ACC-C-2	ACC-C-1
1	The power has been supplied to the unit for at least 12 hours before starting the compressor in order to energize the crank case heater The bottom of the compressor should be warm to the touch and the crankcase heater around the feet of the compressor should be hot to the touch.						
2	Electrical interlocks - Start / Stop						
3	Vibration & noise level acceptable						

No.	Equipment No.--->	AC-C-7	AC-C-8	AC-C-9	AC-C-10	AC-C-11	AC-C-12
	Associated ACC Unit --->	ACC-C-2	ACC-C-2	ACC-C-1	ACC-C-1	ACC-C-2	ACC-C-2
1	The power has been supplied to the unit for at least 12 hours before starting the compressor in order to energize the crank case heater The bottom of the compressor should be warm to the touch and the crankcase heater around the feet of the compressor should be hot to the touch.						
2	Electrical interlocks - Start / Stop						
3	Vibration & noise level acceptable						

No.	Equipment No.--->	AC-C-13	AC-C-14	AC-C-15	AC-C-16	AC-C-17	AC-C-18
	Associated ACC Unit --->	ACC-C-2	ACC-C-2	ACC-C-2	ACC-C-2	ACC-C-2	ACC-C-1
1	The power has been supplied to the unit for at least 12 hours before starting the compressor in order to energize the crank case heater The bottom of the compressor should be warm to the touch and the crankcase heater around the feet of the compressor should be hot to the touch.						
2	Electrical interlocks - Start / Stop						
3	Vibration & noise level acceptable						

No.	Equipment No.--->	AC-C-19	AC-C-20	AC-C-21	AC-C-22	AC-C-23	AC-C-24
	Associated ACC Unit --->	ACC-C-1	ACC-C-1	ACC-C-1	ACC-C-2	ACC-C-2	ACC-C-2
1	The power has been supplied to the unit for at least 12 hours before starting the compressor in order to energize the crank case heater The bottom of the compressor should be warm to the touch and the crankcase heater around the feet of the compressor should be hot to the touch.						
2	Electrical interlocks - Start / Stop						
3	Vibration & noise level acceptable						

No.	Equipment No.---> Associated ACC Unit --->	AC-C-25 ACC-C-2	AC-S-1 ACC-S	AC-S-2 ACC-S
1	The power has been supplied to the unit for at least 12 hours before starting the compressor in order to energize the crank case heater The bottom of the compressor should be warm to the touch and the crankcase heater around the feet of the compressor should be hot to the touch.			
2	Electrical interlocks - Start / Stop			
3	Vibration & noise level acceptable			

END OF CHECKLIST

Functional Test

Project: OGS SOB Building #4 – OGS #45124

Project No. 11123671

SECTION: 238126

SPLIT-SYSTEM AIR CONDITIONERS

1. Submittal / Approvals

Submittal: The equipment and systems integral have undergone functional testing. The checklist items are complete and have been checked off only by parties having direct knowledge of the event, as marked below, respective to each responsible contractor. This functional checklist is submitted for approval, subject to an attached list of outstanding items yet to be completed. A Statement of Correction will be submitted upon completion of any outstanding areas.

_____	_____	_____	_____
Mechanical Contractor	Date	Construction Manager	Date

Approvals: This filled-out checklist has been reviewed. Its completion is approved with exceptions noted below.

_____	_____	_____	_____
Commissioning Authority	Date	Owner's Representative	Date

1. Prerequisite Checklist

a. _____ All control system functions for this systems are programmed and operable per Contract Documents

b. _____ Piping system flushing complete

c. _____ Water treatment system is complete and operational

d. _____ Testing, Adjusting & Balance (TAB) complete and approved for the hydronic system

e. _____ All A/E punchlist items for this equipment corrected

f. _____ These functional test procedures reviewed and approved by installing contractor

g. _____ O&M manuals provided

h. _____ Sufficient clearance around equipment for servicing

2. Testing Procedures and Records

Indoor Units

No	Test Procedure	Pass Y/N
A	**AC-C-1**	
1	Unit controls cycles fan and sequences cooling.	
2	Occupied hours space: Summer design 75°F 50%RH, Winter 72°. Chilled water shall modulate when space temperature between 76°F (adj.) to 73°F (adj.) in the summer, and hot water shall modulate when space temperature between 72°F (adj.) to 70°F (adj.) in the winter.	
3	Pre-treated outside air provided by AHU-5 at design CFM during occupied hours only.	
4	Each AC unit shall run to maintain the space it serves below its set point. AC units are capable of providing cooling and heating simultaneously.	
5	Finned tube radiator shall open/close the hot water control valve to maintain the space it serves above 72°F (adj.).	
6	During emergency, when normal power is out, each AC unit shall run to maintain space temperature between 72°F (adj.) to 75°F (adj.). No outside air shall be provided during emergency.	
7	Alarm: Space temperature 5°F (adj.) outside space set point more than 10 minutes, while hot/chilled water control valve is 100% open	
B	**AC-C-2**	
1	Unit controls cycles fan and sequences cooling.	
2	Occupied hours space: Summer design 75°F 50%RH, Winter 72°. Chilled water shall modulate when space temperature between 76°F (adj.) to 73°F (adj.) in the summer, and hot water shall modulate when space temperature between 72°F (adj.) to 70°F (adj.) in the winter.	
3	Each AC unit shall run to maintain the space it serves below its set point. AC units are capable of providing cooling and heating simultaneously.	
4	Finned tube radiator shall open/close the hot water control valve to maintain the space it serves above 72°F (adj.).	
5	During emergency, when normal power is out, each AC unit shall run to maintain space temperature between 72°F (adj.) to 75°F (adj.). No outside air shall be provided during emergency.	
6	Alarm: Space temperature 5°F (adj.) outside space set point more than 10 minutes, while hot/chilled water control valve is 100% open	
C	**AC-C-3**	
1	Unit controls cycles fan and sequences cooling.	
2	Occupied hours space: Summer design 75°F 50%RH, Winter 72°. Chilled water shall modulate when space temperature between 76°F (adj.) to 73°F (adj.) in the summer, and hot water shall modulate when space temperature between 72°F (adj.) to 70°F (adj.) in the winter.	
3	Each AC unit shall run to maintain the space it serves below its set point. AC units are capable of providing cooling and heating simultaneously.	
4	Finned tube radiator shall open/close the hot water control valve to maintain the space it serves above 72°F (adj.).	

No	Test Procedure	Pass Y/N
5	During emergency, when normal power is out, each AC unit shall run to maintain space temperature between 72°F (adj.) to 75°F (adj.). No outside air shall be provided during emergency.	
6	Alarm: Space temperature 5°F (adj.) outside space set point more than 10 minutes, while hot/chilled water control valve is 100% open	
D	**AC-C-4**	
1	Unit controls cycles fan and sequences cooling.	
2	Occupied hours space: Summer design 75°F 50%RH, Winter 72°. Chilled water shall modulate when space temperature between 76°F (adj.) to 73°F (adj.) in the summer, and hot water shall modulate when space temperature between 72°F (adj.) to 70°F (adj.) in the winter.	
3	Each AC unit shall run to maintain the space it serves below its set point. AC units are capable of providing cooling and heating simultaneously.	
4	Finned tube radiator shall open/close the hot water control valve to maintain the space it serves above 72°F (adj.).	
5	During emergency, when normal power is out, each AC unit shall run to maintain space temperature between 72°F (adj.) to 75°F (adj.). No outside air shall be provided during emergency.	
6	Alarm: Space temperature 5°F (adj.) outside space set point more than 10 minutes, while hot/chilled water control valve is 100% open	
E	**AC-C-5**	
1	Unit controls cycles fan and sequences cooling.	
2	Occupied hours space: Summer design 75°F 50%RH, Winter 72°. Chilled water shall modulate when space temperature between 76°F (adj.) to 73°F (adj.) in the summer, and hot water shall modulate when space temperature between 72°F (adj.) to 70°F (adj.) in the winter.	
3	Each AC unit shall run to maintain the space it serves below its set point. AC units are capable of providing cooling and heating simultaneously.	
4	Finned tube radiator shall open/close the hot water control valve to maintain the space it serves above 72°F (adj.).	
5	During emergency, when normal power is out, each AC unit shall run to maintain space temperature between 72°F (adj.) to 75°F (adj.). No outside air shall be provided during emergency.	
6	Alarm: Space temperature 5°F (adj.) outside space set point more than 10 minutes, while hot/chilled water control valve is 100% open	
F	**AC-C-6**	
1	Unit controls cycles fan and sequences cooling.	
2	Occupied hours space: Summer design 75°F 50%RH, Winter 72°. Chilled water shall modulate when space temperature between 76°F (adj.) to 73°F (adj.) in the summer, and hot water shall modulate when space temperature between 72°F (adj.) to 70°F (adj.) in the winter.	
3	Each AC unit shall run to maintain the space it serves below its set point. AC units are capable of providing cooling and heating simultaneously.	
4	Finned tube radiator shall open/close the hot water control valve to maintain the space it serves above 72°F (adj.).	

No	Test Procedure	Pass Y/N
5	During emergency, when normal power is out, each AC unit shall run to maintain space temperature between 72°F (adj.) to 75°F (adj.). No outside air shall be provided during emergency.	
6	Alarm: Space temperature 5°F (adj.) outside space set point more than 10 minutes, while hot/chilled water control valve is 100% open	
G	**AC-C-7**	
1	Unit controls cycles fan and sequences cooling.	
2	Occupied hours space: Summer design 75°F 50%RH, Winter 72°. Chilled water shall modulate when space temperature between 76°F (adj.) to 73°F (adj.) in the summer, and hot water shall modulate when space temperature between 72°F (adj.) to 70°F (adj.) in the winter.	
3	Each AC unit shall run to maintain the space it serves below its set point. AC units are capable of providing cooling and heating simultaneously.	
4	Finned tube radiator shall open/close the hot water control valve to maintain the space it serves above 72°F (adj.).	
5	During emergency, when normal power is out, each AC unit shall run to maintain space temperature between 72°F (adj.) to 75°F (adj.). No outside air shall be provided during emergency.	
6	Alarm: Space temperature 5°F (adj.) outside space set point more than 10 minutes, while hot/chilled water control valve is 100% open	
H	**AC-C-8**	
1	Unit controls cycles fan and sequences cooling.	
2	Occupied hours space: Summer design 75°F 50%RH, Winter 72°. Chilled water shall modulate when space temperature between 76°F (adj.) to 73°F (adj.) in the summer, and hot water shall modulate when space temperature between 72°F (adj.) to 70°F (adj.) in the winter.	
3	Each AC unit shall run to maintain the space it serves below its set point. AC units are capable of providing cooling and heating simultaneously.	
4	Finned tube radiator shall open/close the hot water control valve to maintain the space it serves above 72°F (adj.).	
5	During emergency, when normal power is out, each AC unit shall run to maintain space temperature between 72°F (adj.) to 75°F (adj.). No outside air shall be provided during emergency.	
6	Alarm: Space temperature 5°F (adj.) outside space set point more than 10 minutes, while hot/chilled water control valve is 100% open	
I	**AC-C-9**	
1	Unit controls cycles fan and sequences cooling.	
2	Occupied hours space: Summer design 75°F 50%RH, Winter 72°. Chilled water shall modulate when space temperature between 76°F (adj.) to 73°F (adj.) in the summer, and hot water shall modulate when space temperature between 72°F (adj.) to 70°F (adj.) in the winter.	
3	Each AC unit shall run to maintain the space it serves below its set point. AC units are capable of providing cooling and heating simultaneously.	
4	Finned tube radiator shall open/close the hot water control valve to maintain the space it serves above 72°F (adj.).	

No	Test Procedure	Pass Y/N
5	During emergency, when normal power is out, each AC unit shall run to maintain space temperature between 72°F (adj.) to 75°F (adj.). No outside air shall be provided during emergency.	
6	Alarm: Space temperature 5°F (adj.) outside space set point more than 10 minutes, while hot/chilled water control valve is 100% open	
J	**AC-C-10**	
1	Unit controls cycles fan and sequences cooling.	
2	Occupied hours space: Summer design 75°F 50%RH, Winter 72°. Chilled water shall modulate when space temperature between 76°F (adj.) to 73°F (adj.) in the summer, and hot water shall modulate when space temperature between 72°F (adj.) to 70°F (adj.) in the winter.	
3	Each AC unit shall run to maintain the space it serves below its set point. AC units are capable of providing cooling and heating simultaneously.	
4	Finned tube radiator shall open/close the hot water control valve to maintain the space it serves above 72°F (adj.).	
5	During emergency, when normal power is out, each AC unit shall run to maintain space temperature between 72°F (adj.) to 75°F (adj.). No outside air shall be provided during emergency.	
6	Alarm: Space temperature 5°F (adj.) outside space set point more than 10 minutes, while hot/chilled water control valve is 100% open	
K	**AC-C-11**	
1	Unit controls cycles fan and sequences cooling.	
2	Occupied hours space: Summer design 75°F 50%RH, Winter 72°. Chilled water shall modulate when space temperature between 76°F (adj.) to 73°F (adj.) in the summer, and hot water shall modulate when space temperature between 72°F (adj.) to 70°F (adj.) in the winter.	
3	Each AC unit shall run to maintain the space it serves below its set point. AC units are capable of providing cooling and heating simultaneously.	
4	Finned tube radiator shall open/close the hot water control valve to maintain the space it serves above 72°F (adj.).	
5	During emergency, when normal power is out, each AC unit shall run to maintain space temperature between 72°F (adj.) to 75°F (adj.). No outside air shall be provided during emergency.	
6	Alarm: Space temperature 5°F (adj.) outside space set point more than 10 minutes, while hot/chilled water control valve is 100% open	
L	**AC-C-12**	
1	Unit controls cycles fan and sequences cooling.	
2	Occupied hours space: Summer design 75°F 50%RH, Winter 72°. Chilled water shall modulate when space temperature between 76°F (adj.) to 73°F (adj.) in the summer, and hot water shall modulate when space temperature between 72°F (adj.) to 70°F (adj.) in the winter.	
3	Each AC unit shall run to maintain the space it serves below its set point. AC units are capable of providing cooling and heating simultaneously.	
4	Finned tube radiator shall open/close the hot water control valve to maintain the space it serves above 72°F (adj.).	

No	Test Procedure	Pass Y/N
5	During emergency, when normal power is out, each AC unit shall run to maintain space temperature between 72°F (adj.) to 75°F (adj.). No outside air shall be provided during emergency.	
6	Alarm: Space temperature 5°F (adj.) outside space set point more than 10 minutes, while hot/chilled water control valve is 100% open	
M	**AC-C-13**	
1	Unit controls cycles fan and sequences cooling.	
2	Occupied hours space: Summer design 75°F 50%RH, Winter 72°. Chilled water shall modulate when space temperature between 76°F (adj.) to 73°F (adj.) in the summer, and hot water shall modulate when space temperature between 72°F (adj.) to 70°F (adj.) in the winter.	
3	Each AC unit shall run to maintain the space it serves below its set point. AC units are capable of providing cooling and heating simultaneously.	
4	Finned tube radiator shall open/close the hot water control valve to maintain the space it serves above 72°F (adj.).	
5	During emergency, when normal power is out, each AC unit shall run to maintain space temperature between 72°F (adj.) to 75°F (adj.). No outside air shall be provided during emergency.	
6	Alarm: Space temperature 5°F (adj.) outside space set point more than 10 minutes, while hot/chilled water control valve is 100% open	
N	**AC-C-14**	
1	Unit controls cycles fan and sequences cooling.	
2	Occupied hours space: Summer design 75°F 50%RH, Winter 72°. Chilled water shall modulate when space temperature between 76°F (adj.) to 73°F (adj.) in the summer, and hot water shall modulate when space temperature between 72°F (adj.) to 70°F (adj.) in the winter.	
3	Each AC unit shall run to maintain the space it serves below its set point. AC units are capable of providing cooling and heating simultaneously.	
4	Finned tube radiator shall open/close the hot water control valve to maintain the space it serves above 72°F (adj.).	
5	During emergency, when normal power is out, each AC unit shall run to maintain space temperature between 72°F (adj.) to 75°F (adj.). No outside air shall be provided during emergency.	
6	Alarm: Space temperature 5°F (adj.) outside space set point more than 10 minutes, while hot/chilled water control valve is 100% open	
O	**AC-C-15**	
1	Unit controls cycles fan and sequences cooling.	
2	Occupied hours space: Summer design 75°F 50%RH, Winter 72°. Chilled water shall modulate when space temperature between 76°F (adj.) to 73°F (adj.) in the summer, and hot water shall modulate when space temperature between 72°F (adj.) to 70°F (adj.) in the winter.	
3	Each AC unit shall run to maintain the space it serves below its set point. AC units are capable of providing cooling and heating simultaneously.	
4	Finned tube radiator shall open/close the hot water control valve to maintain the space it serves above 72°F (adj.).	

No	Test Procedure	Pass Y/N
5	During emergency, when normal power is out, each AC unit shall run to maintain space temperature between 72°F (adj.) to 75°F (adj.). No outside air shall be provided during emergency.	
6	Alarm: Space temperature 5°F (adj.) outside space set point more than 10 minutes, while hot/chilled water control valve is 100% open	
P	**AC-C-16**	
1	Unit controls cycles fan and sequences cooling.	
2	Occupied hours space: Summer design 75°F 50%RH, Winter 72°. Chilled water shall modulate when space temperature between 76°F (adj.) to 73°F (adj.) in the summer, and hot water shall modulate when space temperature between 72°F (adj.) to 70°F (adj.) in the winter.	
3	Each AC unit shall run to maintain the space it serves below its set point. AC units are capable of providing cooling and heating simultaneously.	
4	Finned tube radiator shall open/close the hot water control valve to maintain the space it serves above 72°F (adj.).	
5	During emergency, when normal power is out, each AC unit shall run to maintain space temperature between 72°F (adj.) to 75°F (adj.). No outside air shall be provided during emergency.	
6	Alarm: Space temperature 5°F (adj.) outside space set point more than 10 minutes, while hot/chilled water control valve is 100% open	
Q	**AC-C-17**	
1	Unit controls cycles fan and sequences cooling.	
2	Occupied hours space: Summer design 75°F 50%RH, Winter 72°. Chilled water shall modulate when space temperature between 76°F (adj.) to 73°F (adj.) in the summer, and hot water shall modulate when space temperature between 72°F (adj.) to 70°F (adj.) in the winter.	
3	Each AC unit shall run to maintain the space it serves below its set point. AC units are capable of providing cooling and heating simultaneously.	
4	Finned tube radiator shall open/close the hot water control valve to maintain the space it serves above 72°F (adj.).	
5	During emergency, when normal power is out, each AC unit shall run to maintain space temperature between 72°F (adj.) to 75°F (adj.). No outside air shall be provided during emergency.	
6	Alarm: Space temperature 5°F (adj.) outside space set point more than 10 minutes, while hot/chilled water control valve is 100% open	
R	**AC-C-18**	
1	Unit controls cycles fan and sequences cooling.	
2	Occupied hours space: Summer design 75°F 50%RH, Winter 72°. Chilled water shall modulate when space temperature between 76°F (adj.) to 73°F (adj.) in the summer, and hot water shall modulate when space temperature between 72°F (adj.) to 70°F (adj.) in the winter.	
3	Each AC unit shall run to maintain the space it serves below its set point. AC units are capable of providing cooling and heating simultaneously.	
4	Finned tube radiator shall open/close the hot water control valve to maintain the space it serves above 72°F (adj.).	

No	Test Procedure	Pass Y/N
5	During emergency, when normal power is out, each AC unit shall run to maintain space temperature between 72°F (adj.) to 75°F (adj.). No outside air shall be provided during emergency.	
6	Alarm: Space temperature 5°F (adj.) outside space set point more than 10 minutes, while hot/chilled water control valve is 100% open	
S	**AC-C-19**	
1	Unit controls cycles fan and sequences cooling.	
2	Occupied hours space: Summer design 75°F 50%RH, Winter 72°. Chilled water shall modulate when space temperature between 76°F (adj.) to 73°F (adj.) in the summer, and hot water shall modulate when space temperature between 72°F (adj.) to 70°F (adj.) in the winter.	
3	Each AC unit shall run to maintain the space it serves below its set point. AC units are capable of providing cooling and heating simultaneously.	
4	Finned tube radiator shall open/close the hot water control valve to maintain the space it serves above 72°F (adj.).	
5	During emergency, when normal power is out, each AC unit shall run to maintain space temperature between 72°F (adj.) to 75°F (adj.). No outside air shall be provided during emergency.	
6	Alarm: Space temperature 5°F (adj.) outside space set point more than 10 minutes, while hot/chilled water control valve is 100% open	
T	**AC-C-20**	
1	Unit controls cycles fan and sequences cooling.	
2	Occupied hours space: Summer design 75°F 50%RH, Winter 72°. Chilled water shall modulate when space temperature between 76°F (adj.) to 73°F (adj.) in the summer, and hot water shall modulate when space temperature between 72°F (adj.) to 70°F (adj.) in the winter.	
3	Each AC unit shall run to maintain the space it serves below its set point. AC units are capable of providing cooling and heating simultaneously.	
4	Finned tube radiator shall open/close the hot water control valve to maintain the space it serves above 72°F (adj.).	
5	During emergency, when normal power is out, each AC unit shall run to maintain space temperature between 72°F (adj.) to 75°F (adj.). No outside air shall be provided during emergency.	
6	Alarm: Space temperature 5°F (adj.) outside space set point more than 10 minutes, while hot/chilled water control valve is 100% open	
U	**AC-C-21**	
1	Unit controls cycles fan and sequences cooling.	
2	Occupied hours space: Summer design 75°F 50%RH, Winter 72°. Chilled water shall modulate when space temperature between 76°F (adj.) to 73°F (adj.) in the summer, and hot water shall modulate when space temperature between 72°F (adj.) to 70°F (adj.) in the winter.	
3	Each AC unit shall run to maintain the space it serves below its set point. AC units are capable of providing cooling and heating simultaneously.	
4	Finned tube radiator shall open/close the hot water control valve to maintain the space it serves above 72°F (adj.).	

No	Test Procedure	Pass Y/N
5	During emergency, when normal power is out, each AC unit shall run to maintain space temperature between 72°F (adj.) to 75°F (adj.). No outside air shall be provided during emergency.	
6	Alarm: Space temperature 5°F (adj.) outside space set point more than 10 minutes, while hot/chilled water control valve is 100% open	
V	**AC-C-22**	
1	Unit controls cycles fan and sequences cooling.	
2	Occupied hours space: Summer design 75°F 50%RH, Winter 72°. Chilled water shall modulate when space temperature between 76°F (adj.) to 73°F (adj.) in the summer, and hot water shall modulate when space temperature between 72°F (adj.) to 70°F (adj.) in the winter.	
3	Each AC unit shall run to maintain the space it serves below its set point. AC units are capable of providing cooling and heating simultaneously.	
4	Finned tube radiator shall open/close the hot water control valve to maintain the space it serves above 72°F (adj.).	
5	During emergency, when normal power is out, each AC unit shall run to maintain space temperature between 72°F (adj.) to 75°F (adj.). No outside air shall be provided during emergency.	
6	Alarm: Space temperature 5°F (adj.) outside space set point more than 10 minutes, while hot/chilled water control valve is 100% open	
W	**AC-C-23**	
1	Unit controls cycles fan and sequences cooling.	
2	Occupied hours space: Summer design 75°F 50%RH, Winter 72°. Chilled water shall modulate when space temperature between 76°F (adj.) to 73°F (adj.) in the summer, and hot water shall modulate when space temperature between 72°F (adj.) to 70°F (adj.) in the winter.	
3	Each AC unit shall run to maintain the space it serves below its set point. AC units are capable of providing cooling and heating simultaneously.	
4	Finned tube radiator shall open/close the hot water control valve to maintain the space it serves above 72°F (adj.).	
5	During emergency, when normal power is out, each AC unit shall run to maintain space temperature between 72°F (adj.) to 75°F (adj.). No outside air shall be provided during emergency.	
6	Alarm: Space temperature 5°F (adj.) outside space set point more than 10 minutes, while hot/chilled water control valve is 100% open	
X	**AC-C-24**	
1	Unit controls cycles fan and sequences cooling.	
2	Occupied hours space: Summer design 75°F 50%RH, Winter 72°. Chilled water shall modulate when space temperature between 76°F (adj.) to 73°F (adj.) in the summer, and hot water shall modulate when space temperature between 72°F (adj.) to 70°F (adj.) in the winter.	
3	Each AC unit shall run to maintain the space it serves below its set point. AC units are capable of providing cooling and heating simultaneously.	
4	Finned tube radiator shall open/close the hot water control valve to maintain the space it serves above 72°F (adj.).	

No	Test Procedure	Pass Y/N
5	During emergency, when normal power is out, each AC unit shall run to maintain space temperature between 72°F (adj.) to 75°F (adj.). No outside air shall be provided during emergency.	
6	Alarm: Space temperature 5°F (adj.) outside space set point more than 10 minutes, while hot/chilled water control valve is 100% open	
Y	**AC-C-25**	
1	Unit controls cycles fan and sequences cooling.	
2	Occupied hours space: Summer design 75°F 50%RH, Winter 72°. Chilled water shall modulate when space temperature between 76°F (adj.) to 73°F (adj.) in the summer, and hot water shall modulate when space temperature between 72°F (adj.) to 70°F (adj.) in the winter.	
3	Each AC unit shall run to maintain the space it serves below its set point. AC units are capable of providing cooling and heating simultaneously.	
4	Finned tube radiator shall open/close the hot water control valve to maintain the space it serves above 72°F (adj.).	
5	During emergency, when normal power is out, each AC unit shall run to maintain space temperature between 72°F (adj.) to 75°F (adj.). No outside air shall be provided during emergency.	
6	Alarm: Space temperature 5°F (adj.) outside space set point more than 10 minutes, while hot/chilled water control valve is 100% open	
Z	**AC-S-1**	
1	Unit controls cycles fan and sequences cooling.	
2	Occupied hours space: Summer design 75°F 50%RH, Winter 72°. Chilled water shall modulate when space temperature between 76°F (adj.) to 73°F (adj.) in the summer, and hot water shall modulate when space temperature between 72°F (adj.) to 70°F (adj.) in the winter.	
3	Each AC unit shall run to maintain the space it serves below its set point. AC units are capable of providing cooling and heating simultaneously.	
4	Finned tube radiator shall open/close the hot water control valve to maintain the space it serves above 72°F (adj.).	
5	During emergency, when normal power is out, each AC unit shall run to maintain space temperature between 72°F (adj.) to 75°F (adj.). No outside air shall be provided during emergency.	
6	Alarm: Space temperature 5°F (adj.) outside space set point more than 10 minutes, while hot/chilled water control valve is 100% open	
AA	**AC-S-2**	
1	Unit controls cycles fan and sequences cooling.	
2	Occupied hours space: Summer design 75°F 50%RH, Winter 72°. Chilled water shall modulate when space temperature between 76°F (adj.) to 73°F (adj.) in the summer, and hot water shall modulate when space temperature between 72°F (adj.) to 70°F (adj.) in the winter.	
3	Each AC unit shall run to maintain the space it serves below its set point. AC units are capable of providing cooling and heating simultaneously.	
4	Finned tube radiator shall open/close the hot water control valve to maintain the space it serves above 72°F (adj.).	

No	Test Procedure	Pass Y/N
5	During emergency, when normal power is out, each AC unit shall run to maintain space temperature between 72°F (adj.) to 75°F (adj.). No outside air shall be provided during emergency.	
6	Alarm: Space temperature 5°F (adj.) outside space set point more than 10 minutes, while hot/chilled water control valve is 100% open	

Outdoor Units

No	Test Procedure	Pass Y/N
A	**ACC-C-1**	
1	Unit controls cycles fan and sequences cooling based upon demand from associated units.	
2	Refrigerant distribution box connecting outdoor and indoor units. It allows the individual space to be in either the heating or cooling mode whilst not requiring the outdoor unit selecting the mode. It also allows diversification in the overall cooling and/or heating load and greatly increases energy efficiency.	
3	Automatic-reset timer to prevent rapid cycling of compressor.	
B	**ACC-C-2**	
1	Unit controls cycles fan and sequences cooling based upon demand from associated units.	
2	Refrigerant distribution box connecting outdoor and indoor units. It allows the individual space to be in either the heating or cooling mode whilst not requiring the outdoor unit selecting the mode. It also allows diversification in the overall cooling and/or heating load and greatly increases energy efficiency.	
3	Automatic-reset timer to prevent rapid cycling of compressor.	
C	**ACC-S**	
1	Unit controls cycles fan and sequences cooling based upon demand from associated units.	
2	Refrigerant distribution box connecting outdoor and indoor units. It allows the individual space to be in either the heating or cooling mode whilst not requiring the outdoor unit selecting the mode. It also allows diversification in the overall cooling and/or heating load and greatly increases energy efficiency.	
3	Automatic-reset timer to prevent rapid cycling of compressor.	

END OF TEST

Pre-Functional Checklist

Project: OGS SOB Building #4 – OGS #45124

Project No. 11123671

SECTION: 238219

FAN COIL UNITS

1. Submittal / Approvals

Submittal. The above equipment and systems integral to them are complete and ready for functional testing. This pre-functional checklist is submitted for approval, subject to an attached list of outstanding items yet to be completed. A Statement of Correction will be submitted upon completion of any outstanding areas. None of the outstanding items preclude safe and reliable functional tests being performed.

_____ _____
Mechanical Contractor Date

Pre-functional checklist items are to be completed as part of startup & initial checkout, preparatory to functional testing.

- This checklist does not take the place of the manufacturer's recommended checkout and startup procedures or report.
- If this form is not used for documenting, one of similar rigor shall be used.
- Contractors assigned responsibility for sections of the checklist shall be responsible to see that checklist items by their suppliers and venders are completed and checked off.

Approvals: This filled-out checklist has been reviewed. Its completion is approved with the exceptions noted below.

_____ _____ _____ _____
Commissioning Agent Date Owner's Representative Date

2. Requested Documentation Submitted

Equipment Tag--->	FCU-1	FCU-2
Manufacturer's cut sheets		
O&M manuals		
Performance data		

3. Model Verification

Equipment Tag--->	FCU-1	FCU-2
Room Served		
Manufacturer		
Model No.		
Serial No.		
CFM		
Volts / Ph / Hz		
Amps		
Total (MBH)		
Sensible (MBH)		

4. Installation Check

EQUIPMENT TAG --->	FCU-1	FCU-2
General Installation		
General appearance good; no apparent damage		
Permanent labels affixed		
Casing condition good: no dents, leaks		
Maintenance access acceptable for unit and components		
Thermostats installed		
Thermal insulation properly installed		
Instrumentation installed according to specification		
Clean up of equipment completed		

EQUIPMENT TAG --->	FCU-1	FCU-2
Mounting/support system and vibration isolation		
Condensate pump installed		
Valves, Piping and Coils		
Pipe fittings and accessories complete		
Pipes properly supported		
Pipes properly insulated		
Piping type and flow direction properly labeled on piping		
No leaking apparent around fittings		
Coils are clean and fins are in good condition		
Valves properly tagged		
Valves installed in proper direction		
Fans		
Fan and motor alignment are correct		
Fan area clean		
Fan and motor properly lubricated		
Electrical and Controls		
Power disconnects in place, labeled and tested		
Electric wiring complete		
Low voltage wiring provided between indoor and outdoor units		
All electric connections tight		
Overload protection (sized correctly)		
Proper grounding installed for components and unit		
Safeties in place and operable		
Control system interlocks hooked up and functional		
All control devices and wiring complete		

5. Operational Checks

EQUIPMENT TAG >	FCU-1	FCU-2
Direction of rotation		
Vibration & noise level acceptable		
Electrical interlocks - start / stop		

END OF CHECKLIST

Functional Test

Project: OGS SOB Building #4 – OGS #45124

Project No. 11123671

SECTION: 238219

FAN COIL UNITS

1. Submittal / Approvals

Submittal: The equipment and systems integral have undergone functional testing. The checklist items are complete and have been checked off only by parties having direct knowledge of the event, as marked below, respective to each responsible contractor. This functional checklist is submitted for approval, subject to an attached list of outstanding items yet to be completed. A Statement of Correction will be submitted upon completion of any outstanding areas.

_____ _____
Mechanical Contractor Date

Approvals: This filled-out checklist has been reviewed. Its completion is approved with exceptions noted below.

_____ _____ _____ _____
Commissioning Agent Date Owner's Representative Date

1. Prerequisite Checklist.

a. ____ The unit has been started up and startup reports and prefunctional checklists submitted and approved ready for functional testing:
b. ____ All control system functions for this and all interlocking systems are programmed and operable per Contract Documents, including final set points and schedules
c. ____ Testing and balance (TAB) complete.
d. ____ All A/E punchlist items for this equipment corrected
e. ____ These functional test procedures reviewed and approved by installing contractor
f. ____ Safeties and operating ranges reviewed.
g. ____ Sufficient clearance around equipment for servicing.
h. ____ O&M manuals provided.
i. ____ Record made of all values for current setpoints (SP), control parameters, limits, delays, lockouts, schedules, etc. changed to accommodate testing:

2. Functional Testing Record

EQUIPMENT LOCATION/TAG --->	FCU-1	FCU-2
Occupied hours space: Summer design 75°F 50%RH, Winter 72°. Chilled water shall modulate when space temperature between 76°F (adj.) to 73°F (adj.) in the summer. Hot water shall modulate when space temperature between 72°F (adj.) to 70°F (adj.) in the winter.		
Chilled and hot water control valve modulating to maintain the zone space temperature at set point.		
When space temperature is ±5°F (adj.) of set point for more than 10 minutes (adj.), an alarm shall be generated at BMS.		
Unit turns ON/OFF		

END OF CHECKLIST

Pre-Functional Checklist

Project: OGS SOB Building #4 – OGS #45124

Project No. 11123671

SECTION: 238220

CHILLED BEAMS UNITS

1. Submittal / Approvals

Submittal. The above equipment and systems integral to them are complete and ready for functional testing. This pre-functional checklist is submitted for approval, subject to an attached list of outstanding items yet to be completed. A Statement of Correction will be submitted upon completion of any outstanding areas. None of the outstanding items preclude safe and reliable functional tests being performed.

_____	_____	_____	_____
HVAC Contractor	Date	Construction Contractor	Date

Pre-functional checklist items are to be completed as part of startup & initial checkout, preparatory to functional testing.

- This checklist does not take the place of the manufacturer's recommended checkout and startup procedures or report
- If this form is not used for documenting, one of similar rigor shall be used
- Contractors assigned responsibility for sections of the checklist shall be responsible to see that checklist items by their subcontractors are completed and checked off

Approvals. This filled-out checklist has been reviewed. Its completion is approved with the exceptions noted below.

_____	_____	_____	_____
Commissioning Agent	Date	Director's Representative	Date

2. Requested documentation submitted

EQUIPMENT TAG --->	CB 1	CB-2-1	CB-2-2	CB-2-3	CB-2-4	CB-3-1
Manufacturer's cut sheet						
Performance data						
O & M Manuals						

EQUIPMENT TAG --->	CB-3-2	CB-4-1	CB-4-2	CB-5-1	CB-5-2	CB-6-1
Manufacturer's cut sheet						
Performance data						
O & M Manuals						

EQUIPMENT TAG --->	CB-6-2	CB-8-1	CB-8-2	CB-8-3	CB-9-1	CB-9-2
Manufacturer's cut sheet						
Performance data						
O & M Manuals						

EQUIPMENT TAG --->	CB-10-1	CB-10-2	CB-14-1	CB-14-2	CB-15-1	CB-15-2
Manufacturer's cut sheet						
Performance data						
O & M Manuals						

EQUIPMENT TAG --->	CB-16-1	CB-16-2	CB-17-1	CB-17-2	CB-17C-1	CB-17C-2
Manufacturer's cut sheet						
Performance data						
O & M Manuals						

EQUIPMENT TAG --->	CB-18-1	CB-18-2	CB-19-1	CB-19-2	CB-C-1	CB-C-2
Manufacturer's cut sheet						
Performance data						
O & M Manuals						

3. Model verification

EQUIPMENT TAG --->	CB 1	CB-2-1	CB-2-2	CB-2-3	CB-2-4	CB-3-1
Service						
Manufacturer						
Model #						
Serial #						
CFM						
Max. Throw (ft)						
Dimensions						

Width						
Length						
Height						
GPM						
Supply Cooling Power (BTU/HR)						

EQUIPMENT TAG --->	**CB-3-2**	**CB-4-1**	**CB-4-2**	**CB-5-1**	**CB-5-2**	**CB-6-1**
Service						
Manufacturer						
Model #						
Serial #						
CFM						
Max. Throw (ft)						
Dimensions						
Width						
Length						

Height						
GPM						
Supply Cooling Power (BTU/HR)						

EQUIPMENT TAG --->	CB-6-2	CB-8-1	CB-8-2	CB-8-3	CB-9-1	CB-9-2
Service						
Manufacturer						
Model #						
Serial #						
CFM						
Max. Throw (ft)						
Dimensions						
Width						
Length						
Height						
GPM						

Supply Cooling Power (BTU/HR)						

EQUIPMENT TAG --->	CB-10-1	CB-10-2	CB-14-1	CB-14-2	CB-15-1	CB-15-2
Service						
Manufacturer						
Model #						
Serial #						
CFM						
Max. Throw (ft)						
Dimensions						
Width						
Length						
Height						
GPM						
Supply Cooling Power (BTU/HR)						

EQUIPMENT TAG --->	CB-16-1	CB-16-2	CB-17-1	CB-17-2	CB-17C-1	CB-17C-2
Service						
Manufacturer						
Model #						
Serial #						
CFM						
Max. Throw (ft)						
Dimensions						
Width						
Length						
Height						
GPM						
Supply Cooling Power (BTU/HR)						

EQUIPMENT TAG --->	CB-18-1	CB-18-2	CB-19-1	CB-19-2	CB-C-1	CB-C-2
Service						
Manufacturer						
Model #						
Serial #						
CFM						
Max. Throw (ft)						
Dimensions						
Width						
Length						
Height						
GPM						
Supply Cooling Power (BTU/HR)						

4. Installation Checks

EQUIPMENT TAG --->	CB											
	1	2-1	2-2	2-3	2-4	3-1	3-2	4-1	4-2	5-1	5-2	6-1
General Installation												
Permanent labels affixed												
Casing condition good: no dents, leaks												
Maintenance access acceptable for unit and components												
Thermal insulation properly installed and according to specification												
Instrumentation installed according to drawing												
Clean up of equipment completed per contract documents												
Valves, Piping and Coils												
Pipe fittings complete and pipes properly supported												
Pipes properly insulated												
Pipes properly labeled												
Piping system properly flushed												
No leaking apparent around fittings												
All coils are clean and fins are in good condition												
Valves properly tagged												
Valves installed in proper direction												
Safeties in place and operable												
Control system interlocks hooked up and functional												
All control devices and wiring complete												
Control valves installed and operational												

EQUIPMENT TAG --->	CB											
	6-2	8-1	8-2	8-3	9-1	9-2	10-1	10-2	14-1	14-2	15-1	15-2
General Installation												
Permanent labels affixed												
Casing condition good: no dents, leaks												
Maintenance access acceptable for unit and components												
Thermal insulation properly installed and according to specification												
Instrumentation installed according to drawing												
Clean up of equipment completed per contract documents												
Valves, Piping and Coils												
Pipe fittings complete and pipes properly supported												
Pipes properly insulated												
Pipes properly labeled												
Piping system properly flushed												
No leaking apparent around fittings												
All coils are clean and fins are in good condition												
Valves properly tagged												
Valves installed in proper direction												
Safeties in place and operable												
Control system interlocks hooked up and functional												
All control devices and wiring complete												
Control valves installed and operational												

EQUIPMENT TAG --->	CB											
	16-1	16-2	17-1	17-2	17C-1	17C-2	18-1	18-2	19-1	19-2	C-1	C-2
General Installation												
Permanent labels affixed												
Casing condition good: no dents, leaks												
Maintenance access acceptable for unit and components												
Thermal insulation properly installed and according to specification												
Instrumentation installed according to drawing												
Clean up of equipment completed per contract documents												
Valves, Piping and Coils												
Pipe fittings complete and pipes properly supported												
Pipes properly insulated												
Pipes properly labeled												
Piping system properly flushed												
No leaking apparent around fittings												
All coils are clean and fins are in good condition												
Valves properly tagged												
Valves installed in proper direction												
Safeties in place and operable												
Control system interlocks hooked up and functional												
All control devices and wiring complete												

EQUIPMENT TAG --->	CB											
	16-1	16-2	17-1	17-2	17C-1	17C-2	18-1	18-2	19-1	19-2	C-1	C-2
Control valves installed and operational												

5. Operational Checks (These augment mfr's list. This is not the functional performance testing.)

	CB											
EQUIPMENT TAG --->	**1**	**2-1**	**2-2**	**2-3**	**2-4**	**3-1**	**3-2**	**4-1**	**4-2**	**5-1**	**5-2**	**6-1**
Valves stroke fully and easily and are calibrated												
Valves verified to not be leaking through coils when closed at normal operating pressure												

	CB											
EQUIPMENT TAG --->	**6-2**	**8-1**	**8-2**	**8-3**	**9-1**	**9-2**	**10-1**	**10-2**	**14-1**	**14-2**	**15-1**	**15-2**
Valves stroke fully and easily and are calibrated												
Valves verified to not be leaking through coils when closed at normal operating pressure												

	CB											
EQUIPMENT TAG --->	**16-1**	**16-2**	**17-1**	**17-2**	**17C-1**	**17C-2**	**18-1**	**18-2**	**19-1**	**19-2**	**C-1**	**C-2**
Valves stroke fully and easily and are calibrated												
Valves verified to not be leaking through coils when closed at normal operating pressure												

END OF CHECKLIST

Functional Test

Project: OGS SOB Building #4 – OGS #45124

Project No. 11123671

SECTION: 238220

CHILLED BEAM UNITS

1. Submittal / Approvals

Submittal: The equipment and systems integral have undergone functional testing. The checklist items are complete and have been checked off only by parties having direct knowledge of the event, as marked below, respective to each responsible contractor. This functional checklist is submitted for approval, subject to an attached list of outstanding items yet to be completed. A Statement of Correction will be submitted upon completion of any outstanding areas.

HVAC Contractor	Date	Construction Contractor	Date

Approvals: This filled-out checklist has been reviewed. Its completion is approved with exceptions noted below.

Commissioning Agent	Date	Director's Representative	Date

1. Prerequisite Checklist

a. ____ The Pre-functional checklist is complete and the unit is ready for functional testing.
b. ____ All A/E punchlist items for this equipment are corrected.
c. ____ Safeties and operating ranges reviewed.
d. ____ Sufficient clearance around equipment for servicing.
e. ____ O&M Manuals provided.
f. ____ These functional test procedures reviewed and approved by installing contractor and vendors.

2. Testing Procedures and Record

No.	Test Procedure	CB-1	CB-2-1	CB-2-2	CB-2-3	CB-2-4	CB-3-1	CB-3-2	CB-4-1	CB-4-2
1	The BMS shall monitor each space calculated dew point temperature and select the highest reading. The program shall reset the chilled beam supply water temperature setpoint such that the supply temperature is minimum 1 ºF (adj.) above the highest space dew point temperature.									
2	On sensing any space dew point temperature which is within ±2°F of the chilled water supply temperature, an alarm shall be activated at the workstation. The setpoint shall be programmed with user adjustable high and low limits.									
3	Occupied hours set point: Summer design 75°F 50%RH, Winter 72° heating. Cooling between 76°F to 73°F, heating between 72°F to 70°F. Unoccupied hours set point: summer 84°F, winter 60°F. All set points shall be adjustable.									
4	Occupied hours space: Chilled water shall modulate when space temperature between 76°F (adj.) to 73°F (adj.) in the summer, and hot water shall modulate when space temperature between 72°F (adj.) to 70°F (adj.) in the winter.									

No.	Test Procedure	CB-1	CB-2-1	CB-2-2	CB-2-3	CB-2-4	CB-3-1	CB-3-2	CB-4-1	CB-4-2
5	Adjust the setpoint until it is 4°F above the space temp Valves open and cold air delivered									
6	Adjust the setpoint until it is 4°F below the space temp Valves close									
7	Alarm shall be generated at BMS if the supply water temperature is above 59ºF									

2. Testing Procedures and Record (Continued)

No.	Test Procedure	CB-5-1	CB-5-2	CB-6-1	CB-6-2	CB-8-1	CB-8-2	CB-8-3	CB-9-1	CB-9-2
1	The BMS shall monitor each space calculated dew point temperature and select the highest reading. The program shall reset the chilled beam supply water temperature setpoint such that the supply temperature is minimum 1 ºF (adj.) above the highest space dew point temperature.									

No.	Test Procedure	CB-5-1	CB-5-2	CB-6-1	CB-6-2	CB-8-1	CB-8-2	CB-8-3	CB-9-1	CB-9-2
2	On sensing any space dew point temperature which is within ±2°F of the chilled water supply temperature, an alarm shall be activated at the workstation. The setpoint shall be programmed with user adjustable high and low limits.									
3	Occupied hours set point: Summer design 75°F 50%RH, Winter 72° heating. Cooling between 76°F to 73°F, heating between 72°F to 70°F. Unoccupied hours set point: summer 84°F, winter 60°F. All set points shall be adjustable.									
4	Occupied hours space: Chilled water shall modulate when space temperature between 76°F (adj.) to 73°F (adj.) in the summer, and hot water shall modulate when space temperature between 72°F (adj.) to 70°F (adj.) in the winter.									
5	Adjust the setpoint until it is 4°F above the space temp Valves open and cold air delivered									
6	Adjust the setpoint until it is 4°F below the space temp Valves close									

No.	Test Procedure	CB-5-1	CB-5-2	CB-6-1	CB-6-2	CB-8-1	CB-8-2	CB-8-3	CB-9-1	CB-9-2
7	Alarm shall be generated at BMS if the supply water temperature is above 59ºF									

No.	Test Procedure	CB-10-1	CB-10-2	CB-14-1	CB-14-2	CB-15-1	CB-15-2	CB-16-1	CB-16-2	CB-17-1
1	The BMS shall monitor each space calculated dew point temperature and select the highest reading. The program shall reset the chilled beam supply water temperature setpoint such that the supply temperature is minimum 1 ºF (adj.) above the highest space dew point temperature.									
2	On sensing any space dew point temperature which is within ±2°F of the chilled water supply temperature, an alarm shall be activated at the workstation. The setpoint shall be programmed with user adjustable high and low limits.									
3	Occupied hours set point: Summer design 75°F 50%RH, Winter 72° heating. Cooling between 76°F to 73°F, heating between 72°F to 70°F. Unoccupied hours set point: summer 84°F, winter 60°F. All set points shall be adjustable.									

No.	Test Procedure	CB-10-1	CB-10-2	CB-14-1	CB-14-2	CB-15-1	CB-15-2	CB-16-1	CB-16-2	CB-17-1
4	Occupied hours space: Chilled water shall modulate when space temperature between 76°F (adj.) to 73°F (adj.) in the summer, and hot water shall modulate when space temperature between 72°F (adj.) to 70°F (adj.) in the winter.									
5	Adjust the setpoint until it is 4°F above the space temp Valves open and cold air delivered									
6	Adjust the setpoint until it is 4°F below the space temp Valves close									
7	Alarm shall be generated at BMS if the supply water temperature is above 59ºF									

No.	Test Procedure	CB-17-2	CB-17C-1	CB-17C-2	CB-18-1	CB-18-2	CB-19-1	CB-C-1	CB-C-2
1	The BMS shall monitor each space calculated dew point temperature and select the highest reading. The program shall reset the chilled beam supply water temperature setpoint such that the supply temperature is minimum 1 ºF (adj.) above the highest space dew point temperature.								
2	On sensing any space dew point temperature which is within ±2°F of the chilled water supply temperature, an alarm shall be activated at the workstation. The setpoint shall be programmed with user adjustable high and low limits.								
3	Occupied hours set point: Summer design 75°F 50%RH, Winter 72° heating. Cooling between 76°F to 73°F, heating between 72°F to 70°F. Unoccupied hours set point: summer 84°F, winter 60°F. All set points shall be adjustable.								
4	Occupied hours space: Chilled water shall modulate when space temperature between 76°F (adj.) to 73°F (adj.) in the summer, and hot water shall modulate when space temperature between 72°F (adj.) to 70°F (adj.) in the winter.								

No.	Test Procedure	CB-17-2	CB-17C-1	CB-17C-2	CB-18-1	CB-18-2	CB-19-1	CB-C-1	CB-C-2
5	Adjust the setpoint until it is 4°F above the space temp Valves open and cold air delivered								
6	Adjust the setpoint until it is 4°F below the space temp Valves close								
7	Alarm shall be generated at BMS if the supply water temperature is above 59ºF								

END OF TEST

Pre-Functional Checklist

Project: OGS SOB Building #4 – OGS #45124

Project No. 11123671

SECTION: 238236

FINNED TUBE RADIATION

1. Submittal / Approvals

Submittal. The above equipment and systems integral to them are complete and ready for functional testing. This pre-functional checklist is submitted for approval, subject to an attached list of outstanding items yet to be completed. A Statement of Correction will be submitted upon completion of any outstanding areas. None of the outstanding items preclude safe and reliable functional tests being performed.

Mechanical Contractor	Date	Construction Manager	Date

Pre-functional checklist items are to be completed as part of startup & initial checkout, preparatory to functional testing.

- This checklist does not take the place of the manufacturer's recommended checkout and startup procedures or report.
- If this form is not used for documenting, one of similar rigor shall be used.
- Contractors assigned responsibility for sections of the checklist shall be responsible to see that checklist items by their subcontractors are completed and checked off.

Approvals. This filled-out checklist has been reviewed. Its completion is approved with the exceptions noted below.

Commissioning Authority	Date	Owner's Representative	Date

2. Requested documentation submitted

EQUIPMENT TAG ->	FTR
Manufacturer's cut sheet	
Performance data	
O & M Manuals	

3. Model verification

EQUIPMENT TAG	FTR
Location	
Manufacturer	
Model	
Serial #	
Capacity (BTUH/FT)	
Volts / Ph. / Hz	
Amps	

4. Installation Checks

No.	EQUIPMENT TAG --->	FTR
	General Installation	
1	Permanent labels affixed, including for fans.	
2	Casing condition is good: no dents.	
3	Heating coils are in good condition.	
4	Maintenance access is acceptable for unit and components.	
5	Thermostats are installed.	
6	Instrumentation is installed according to specification.	
7	Cleanup of equipment is completed per contract documents.	

END OF CHECKLIST

Functional Test

Project: OGS SOB Building #4 – OGS #45124

Project No. 11123671

SECTION: 238236

FINNED TUBE RADIATION

1. Submittal / Approvals

Submittal: The equipment and systems integral have undergone functional testing. The checklist items are complete and have been checked off only by parties having direct knowledge of the event, as marked below, respective to each responsible contractor. This functional checklist is submitted for approval, subject to an attached list of outstanding items yet to be completed. A Statement of Correction will be submitted upon completion of any outstanding areas.

Mechanical Contractor	Date	Construction Manager	Date

Approvals: This filled-out checklist has been reviewed. Its completion is approved with exceptions noted below.

Commissioning Authority	Date	Owner's Representative	Date

1. Prerequisite Checklist.

a. ____ All control system functions for this systems are programmed and operable per Contract Documents.

b. ____ Testing, Adjusting & Balance (TAB) is complete and approved for the hydronic system.

c. ____ All A/E punchlist items for this equipment are corrected.

d. ____ These functional test procedures have been reviewed and approved by installing contractor.

e. ____ O&M manuals provided.

f. ____ There is sufficient clearance around equipment for servicing.

2. Testing Procedures and Record

No	Sequence of Operation	Pass Y/N
A.	**FTR**	
1	Occupied hours set point: winter design 72°F (adj.). Unoccupied hours set point: winter 60°F (adj.).	
2	Turn hot water control valve on/off to maintain the zone space temperature above set point.	
3	Alarm: Space temperature below set point more than 10 minutes when zone hot water control valve is 100% open.	

END OF TEST

Pre-Functional Checklist

Project: OGS SOB Building #4 – OGS #45124

Project No. 11123671

SECTION: 238239

UNIT HEATERS

1. Submittal / Approvals

Submittal. The above equipment and systems integral to them are complete and ready for functional testing. This pre-functional checklist is submitted for approval, subject to an attached list of outstanding items yet to be completed. A Statement of Correction will be submitted upon completion of any outstanding areas. None of the outstanding items preclude safe and reliable functional tests being performed.

Mechanical Contractor	Date	Construction Manager	Date

Pre-functional checklist items are to be completed as part of startup & initial checkout, preparatory to functional testing.

- This checklist does not take the place of the manufacturer's recommended checkout and startup procedures or report.
- If this form is not used for documenting, one of similar rigor shall be used.
- Contractors assigned responsibility for sections of the checklist shall be responsible to see that checklist items by their subcontractors are completed and checked off.

Approvals. This filled-out checklist has been reviewed. Its completion is approved with the exceptions noted below.

Commissioning Authority	Date	Owner's Representative	Date

2. Requested documentation submitted

EQUIPMENT TAG ->	CUH-1	CUH-2A	CUH-2B	CUH-5A	CUH-5B	CUH-6	CUH-7
Manufacturer's cut sheet							
Performance data							
O & M Manuals							

2. Requested documentation submitted (continued)

EQUIPMENT TAG ->	CUH-8	CUH-9	UH-1	UH-2	UH-3	UH-4	UH-5
Manufacturer's cut sheet							
Performance data							
O & M Manuals							

3. Model verification

EQUIPMENT TAG->	CUH-1	CUH-2A	CUH-2B	CUH-5A	CUH-5B	CUH-6	CUH-7
Location							
Manufacturer							
Model							
Serial #							
Supply CFM							
Capacity (MBH)							
Flow (GPM)							
Volts / Ph. / Hz							
Amps							
HP / W							

3. Model verification (continued)

EQUIPMENT TAG->	CUH-8	CUH-9	UH-1	UH-2	UH-3	UH-4	UH-5
Location							
Manufacturer							
Model							
Serial #							
Supply CFM							
Capacity (MBH)							
Flow (GPM)							
Volts / Ph. / Hz							
Amps							
HP / W							

4. Installation Checks

No.	EQUIPMENT TAG --->	CUH-1	CUH-2A	CUH-2B	CUH-5A	CUH-5B	CUH-6	CUH-7
1	**General Installation**							
2	Permanent labels affixed, including for fans							
3	Casing condition good: no dents							
4	Maintenance access acceptable for unit and components							
5	Thermostats installed							
6	Thermal insulation properly installed							
7	Instrumentation installed according to specification							
8	Clean up of equipment completed per contract documents							
9	**Valves, Piping and Coils**							
10	Pipe fittings complete and pipes properly supported							
11	Pipes properly insulated							
12	Pipes properly labeled							
13	Piping system properly flushed							
14	No leaking apparent around fittings							
15	All coils are clean and fins are in good condition							
16	Valves properly tagged							

No.	EQUIPMENT TAG --->	CUH-1	CUH-2A	CUH-2B	CUH-5A	CUH-5B	CUH-6	CUH-7
17	Valves installed in proper direction							
18	**Fans**							
19	Fan and motor alignment are correct							
20	Fan area clean							
21	Fan and motor properly lubricated							
22	Fan rotation correct							
23	Fan has no unusual noise or vibration							
24	**Electrical and Controls**							
25	Power disconnects in place and labeled							
26	All electric connections tight							
27	Proper grounding installed for components and unit							
28	Safeties in place and operable							
29	Control system interlocks hooked up and functional							
30	All control devices and wiring complete							
31	Control valves installed and operational							

4. Installation Checks (continued)

No.	EQUIPMENT TAG --->	CUH-8	CUH-9	UH-1	UH-2	UH-3	UH-4	UH-5
1	**General Installation**							
2	Permanent labels affixed, including for fans							
3	Casing condition good: no dents							
4	Maintenance access acceptable for unit and components							
5	Thermostats installed							
6	Thermal insulation properly installed							
7	Instrumentation installed according to specification							
8	Clean up of equipment completed per contract documents							
9	**Valves, Piping and Coils**							
10	Pipe fittings complete and pipes properly supported							
11	Pipes properly insulated							
12	Pipes properly labeled							
13	Piping system properly flushed							
14	No leaking apparent around fittings							
15	All coils are clean and fins are in good condition							
16	Valves properly tagged							
17	Valves installed in proper direction							

No.	EQUIPMENT TAG --->	CUH-8	CUH-9	UH-1	UH-2	UH-3	UH-4	UH-5
18	**Fans**							
19	Fan and motor alignment are correct							
20	Fan area clean							
21	Fan and motor properly lubricated							
22	Fan rotation correct							
23	Fan has no unusual noise or vibration							
24	**Electrical and Controls**							
25	Power disconnects in place and labeled							
26	All electric connections tight							
27	Proper grounding installed for components and unit							
28	Safeties in place and operable							
29	Control system interlocks hooked up and functional							
30	All control devices and wiring complete							
31	Control valves installed and operational							

5. Operational Checks (These augment mfr's list. This is not the functional performance testing.)

No.	EQUIPMENT TAG	CUH-1	CUH-2A	CUH-2B	CUH-5A	CUH-5B	CUH-6	CUH-7
1	Fan rotation correct							
2	Fan has no unusual noise or vibration							
3	Valves stroke fully and easily and are calibrated							
4	Valves verified to not be leaking through coils when closed at normal operating pressure							

No.	EQUIPMENT TAG	CUH-8	CUH-9	UH-1	UH-2	UH-3	UH-4	UH-5
1	Fan rotation correct							
2	Fan has no unusual noise or vibration							
3	Valves stroke fully and easily and are calibrated							
4	Valves verified to not be leaking through coils when closed at normal operating pressure							

END OF CHECKLIST

Functional Test

Project: OGS SOB Building #4 – OGS #45124

Project No. 11123671

SECTION: 238239

UNIT HEATERS

1. Submittal / Approvals

Submittal: The equipment and systems integral have undergone functional testing. The checklist items are complete and have been checked off only by parties having direct knowledge of the event, as marked below, respective to each responsible contractor. This functional checklist is submitted for approval, subject to an attached list of outstanding items yet to be completed. A Statement of Correction will be submitted upon completion of any outstanding areas.

Mechanical Contractor	Date	Construction Manager	Date

Approvals: This filled-out checklist has been reviewed. Its completion is approved with exceptions noted below.

Commissioning Authority	Date	Owner's Representative	Date

1. Prerequisite Checklist.

a. ____ All control system functions for this systems are programmed and operable per Contract Documents

b. ____ Piping system flushing complete

c. ____ Water treatment system is complete and operational

d. ____ Testing, Adjusting & Balance (TAB) complete and approved for the hydronic system

e. ____ All A/E punchlist items for this equipment corrected

f. ____ These functional test procedures reviewed and approved by installing contractor

g. ____ O&M manuals provided

h. ____ Sufficient clearance around equipment for servicing

2. Testing Procedures and Record

No	Sequence of Operation	Pass Y/N
A.	**CUH – 1**	
	Room Temperature	
1	Modulate hot water control valve to maintain the space temperature above set point. Occupied Spaces: - Occupied hours set point: 72°F (adj.). - Unoccupied hours set point: 60°F (adj.). Unoccupied Spaces: - Set point: 60°F (adj.).	
	Low Temperature Safety / Alarms	
2	Aquastat to prevent fan operation at low temperature. (Setpoint: ____ F)	
3	Alarm: Space temperature below set point more than 10 minutes when hot water control valve is 100% open.	
	Display	
4	Room temperature indication	
5	Room temperature setpoint	
B.	**CUH – 2A**	
	Room Temperature	
1	Modulate hot water control valve to maintain the space temperature above set point. Occupied Spaces: - Occupied hours set point: 72°F (adj.). - Unoccupied hours set point: 60°F (adj.). Unoccupied Spaces: - Set point: 60°F (adj.).	

No	Sequence of Operation	Pass Y/N
	Low Temperature Safety / Alarms	
2	Aquastat to prevent fan operation at low temperature. (Setpoint: ____ F)	
3	Alarm: Space temperature below set point more than 10 minutes when hot water control valve is 100% open.	
	Display	
4	Room temperature indication	
5	Room temperature setpoint	
C.	**CUH – 2B**	
	Room Temperature	
1	Modulate hot water control valve to maintain the space temperature above set point. Occupied Spaces: - Occupied hours set point: 72°F (adj.). - Unoccupied hours set point: 60°F (adj.). Unoccupied Spaces: - Set point: 60°F (adj.).	
	Low Temperature Safety / Alarms	
2	Aquastat to prevent fan operation at low temperature. (Setpoint: ____ F)	
3	Alarm: Space temperature below set point more than 10 minutes when hot water control valve is 100% open.	
	Display	
4	Room temperature indication	
5	Room temperature setpoint	
D.	**CUH – 5A**	
	Room Temperature	
1	Modulate hot water control valve to maintain the space temperature above set point. Occupied Spaces: - Occupied hours set point: 72°F (adj.). - Unoccupied hours set point: 60°F (adj.). Unoccupied Spaces: - Set point: 60°F (adj.).	
	Low Temperature Safety / Alarms	
2	Aquastat to prevent fan operation at low temperature. (Setpoint: ____ F)	
3	Alarm: Space temperature below set point more than 10 minutes when hot water control valve is 100% open.	

No	Sequence of Operation	Pass Y/N
	Display	
4	Room temperature indication	
5	Room temperature setpoint	
E.	**CUH – 5B**	
	Room Temperature	
1	Modulate hot water control valve to maintain the space temperature above set point. Occupied Spaces: - Occupied hours set point: 72°F (adj.). - Unoccupied hours set point: 60°F (adj.). Unoccupied Spaces: - Set point: 60°F (adj.).	
	Low Temperature Safety / Alarms	
2	Aquastat to prevent fan operation at low temperature. (Setpoint: ____ F)	
3	Alarm: Space temperature below set point more than 10 minutes when hot water control valve is 100% open.	
	Display	
4	Room temperature indication	
5	Room temperature setpoint	
F.	**CUH – 6**	
	Room Temperature	
1	Modulate hot water control valve to maintain the space temperature above set point. Occupied Spaces: - Occupied hours set point: 72°F (adj.). - Unoccupied hours set point: 60°F (adj.). Unoccupied Spaces: - Set point: 60°F (adj.).	
	Low Temperature Safety / Alarms	
2	Aquastat to prevent fan operation at low temperature. (Setpoint: ____ F)	
3	Alarm: Space temperature below set point more than 10 minutes when hot water control valve is 100% open.	
	Display	
4	Room temperature indication	
5	Room temperature setpoint	

No	Sequence of Operation	Pass Y/N
G.	**CUH – 7**	
	Room Temperature	
1	Modulate hot water control valve to maintain the space temperature above set point. Occupied Spaces: - Occupied hours set point: 72°F (adj.). - Unoccupied hours set point: 60°F (adj.). Unoccupied Spaces: - Set point: 60°F (adj.).	
	Low Temperature Safety / Alarms	
2	Aquastat to prevent fan operation at low temperature. (Setpoint: ____ F)	
3	Alarm: Space temperature below set point more than 10 minutes when hot water control valve is 100% open.	
	Display	
4	Room temperature indication	
5	Room temperature setpoint	
H.	**CUH – 8**	
	Room Temperature	
1	Modulate hot water control valve to maintain the space temperature above set point. Occupied Spaces: - Occupied hours set point: 72°F (adj.). - Unoccupied hours set point: 60°F (adj.). Unoccupied Spaces: - Set point: 60°F (adj.).	
	Low Temperature Safety / Alarms	
2	Aquastat to prevent fan operation at low temperature. (Setpoint: ____ F)	
3	Alarm: Space temperature below set point more than 10 minutes when hot water control valve is 100% open.	
	Display	
4	Room temperature indication	
5	Room temperature setpoint	
I.	**CUH – 9**	
	Room Temperature	
1	Modulate hot water control valve to maintain the space temperature above set point. Occupied Spaces:	

No	Sequence of Operation	Pass Y/N
	- Occupied hours set point: 72°F (adj.). - Unoccupied hours set point: 60°F (adj.). Unoccupied Spaces: - Set point: 60°F (adj.).	
	Low Temperature Safety / Alarms	
2	Aquastat to prevent fan operation at low temperature. (Setpoint: ____ F)	
3	Alarm: Space temperature below set point more than 10 minutes when hot water control valve is 100% open.	
	Display	
4	Room temperature indication	
5	Room temperature setpoint	
J.	**UH – 1**	
	Room Temperature	
1	Modulate hot water control valve to maintain the space temperature above set point. Occupied Spaces: - Occupied hours set point: 72°F (adj.). - Unoccupied hours set point: 60°F (adj.). Unoccupied Spaces: - Set point: 60°F (adj.).	
	Low Temperature Safety / Alarms	
2	Aquastat to prevent fan operation at low temperature. (Setpoint: ____ F)	
3	Alarm: Space temperature below set point more than 10 minutes when hot water control valve is 100% open.	
	Display	
4	Room temperature indication	
5	Room temperature setpoint	
K.	**UH – 2**	
	Room Temperature	
1	Modulate hot water control valve to maintain the space temperature above set point. Occupied Spaces: - Occupied hours set point: 72°F (adj.). - Unoccupied hours set point: 60°F (adj.). Unoccupied Spaces: - Set point: 60°F (adj.).	

No	Sequence of Operation	Pass Y/N
	Low Temperature Safety / Alarms	
2	Aquastat to prevent fan operation at low temperature. (Setpoint: ____ F)	
3	Alarm: Space temperature below set point more than 10 minutes when hot water control valve is 100% open.	
	Display	
4	Room temperature indication	
5	Room temperature setpoint	
L.	**UH – 3**	
	Room Temperature	
1	Modulate hot water control valve to maintain the space temperature above set point. Occupied Spaces: - Occupied hours set point: 72°F (adj.). - Unoccupied hours set point: 60°F (adj.). Unoccupied Spaces: - Set point: 60°F (adj.).	
	Low Temperature Safety / Alarms	
2	Aquastat to prevent fan operation at low temperature. (Setpoint: ____ F)	
3	Alarm: Space temperature below set point more than 10 minutes when hot water control valve is 100% open.	
	Display	
4	Room temperature indication	
5	Room temperature setpoint	
M.	**UH – 4**	
	Room Temperature	
1	Modulate hot water control valve to maintain the space temperature above set point. Occupied Spaces: - Occupied hours set point: 72°F (adj.). - Unoccupied hours set point: 60°F (adj.). Unoccupied Spaces: - Set point: 60°F (adj.).	
	Low Temperature Safety / Alarms	
2	Aquastat to prevent fan operation at low temperature. (Setpoint: ____ F)	
3	Alarm: Space temperature below set point more than 10 minutes when hot water control valve is 100% open.	

No	Sequence of Operation	Pass Y/N
	Display	
4	Room temperature indication	
5	Room temperature setpoint	
N.	**UH – 5**	
	Room Temperature	
1	Modulate hot water control valve to maintain the space temperature above set point. Occupied Spaces: - Occupied hours set point: 72°F (adj.). - Unoccupied hours set point: 60°F (adj.). Unoccupied Spaces: - Set point: 60°F (adj.).	
	Low Temperature Safety / Alarms	
2	Aquastat to prevent fan operation at low temperature. (Setpoint: ____ F)	
3	Alarm: Space temperature below set point more than 10 minutes when hot water control valve is 100% open.	
	Display	
4	Room temperature indication	
5	Room temperature setpoint	

END OF TEST

SECTION 260923

DISTRIBUTED DIGITAL LIGHTING CONTROL SYSTEM

PART 1 – GENERAL

1.01 SUMMARY

A. Section Includes:
   1. Digital Lighting Controls

B. Control Intent – Control Intent includes, but is not limited to:
   2. Defaults and initial calibration settings for such items as time delay, sensitivity, fade rates, etc.
   3. Initial sensor and switching zones

1.02 SYSTEM DESCRIPTION & OPERATION

A. The Lighting Control and Automation system as defined under this section covers the following equipment:
   1. Digital Room Controllers – Self-configuring, digitally addressable one, two or three relay plenum-rated controllers for on/off control.
   2. Digital Occupancy Sensors – Self-configuring, digitally addressable, calibrated occupancy sensors with LCD display and two-way active infrared (IR) communications.
   3. Digital Switches – Self-configuring, digitally addressable pushbutton on/off, dimming, and scene switches with two-way active infrared (IR) communications.
   4. Digital Daylighting Sensors – Single-zone closed loop, multi-zone open loop and single-zone dual-loop daylighting sensors with two-way active infrared (IR) communications for daylight harvesting using switching, bi-level, tri-level or dimming control.

1.03 LIGHTING CONTROL APPLICATIONS

A. Unless relevant provisions of the applicable local energy codes are more stringent, provide a minimum application of lighting controls as follows:
   1. Space Control Requirements – Provide occupancy/vacancy sensors with Manual- or Partial-ON functionality in all spaces except toilet rooms, storerooms, library stacks, or other applications where hands-free operation is desirable and Automatic-ON occupancy sensors are more appropriate. Provide Manual-ON occupancy/vacancy sensors for any enclosed office, conference room, meeting room, open plan system and training room. For spaces with multiple occupants, or where line-of-sight may be obscured, provide ceiling- or corner-mounted sensors and Manual-ON switches.
   2. Daylit Areas – Provide daylight-responsive automatic control in all spaces (conditioned or unconditioned) where daylight contribution is available as defined by relevant local building energy code:

a. All luminaires within code-defined daylight zones shall be controlled separately from luminaires outside of daylit zones.
b. Daytime setpoints for total ambient illumination (combined daylight and electric light) levels that initiate dimming shall be programmed in compliance with relevant local building energy codes.
c. Multiple-level switched daylight harvesting controls may be utilized for areas marked on drawings.
d. Provide smooth and continuous daylight dimming for areas marked on drawings. Daylighting control system may be designed to turn off electric lighting when daylight is at or above required lighting levels, only if system functions to turn lamps back on at dimmed level, rather than turning full-on prior to dimming.

1.04 SUBMITTALS

A. Submittals Package: Submit the shop drawings, and the product data specified below at the same time as a package.

B. Shop Drawings:
1. Composite wiring and/or schematic diagram of each control circuit as proposed to be installed.
2. Show exact location of all digital devices, including at minimum sensors, load controllers, and switches for each area on reflected ceiling plans. (Contractor must provide AutoCAD format reflected ceiling plans.)
3. Provide room/area details including products and sequence of operation for each room or area. Illustrate typical acceptable room/area connection topologies.

C. Product Data: Catalog sheets, specifications and installation instructions.

D. Include data for each device which:
1. Indicates where sensor is proposed to be installed.
2. Prove that the sensor is suitable for the proposed application.

1.05 QUALITY ASSURANCE

A. Manufacturer: Minimum 10 years experience in manufacture of lighting controls.

1.06 PROJECT CONDITIONS

A. Do not install equipment until following conditions can be maintained in spaces to receive equipment:
1. Ambient temperature: 0° to 40° C (32° to 104° F).
2. Relative humidity: Maximum 90 percent, non-condensing.

1.07 WARRANTY

A. Provide a five year limited manufacturer’s warranty on all room control devices and panels.

PART 2 – PRODUCTS

2.01 MANUFACTURERS

A. Acceptable Manufacturer:
   1. WattStopper
      a. System: Digital Lighting Management (DLM)
   2. Basis of design product: WattStopper Digital Lighting Management (DLM) or subject to compliance and prior approval with specified requirements of this section, one of the following:
      a. Lutron Electronics.
   3. Hubbell Building Automation
      Substitutions:
      a. All proposed substitutions (clearly delineated as such) must be submitted in writing for approval by the design professional a minimum of 10 working days prior to the bid date and must be made available to all bidders. Proposed substitutes must be accompanied by a review of the specification noting compliance on a line-by-line basis.
      b. By using pre-approved substitutions, the contractor accepts responsibility and associated costs for all required modifications to circuitry, devices, and wiring. The contractor shall provide complete engineered shop drawings (including power and control wiring) with deviations from the original design highlighted for review and approval prior to rough-in

2.02 DIGITAL LOAD CONTROLLERS

A. Digital controllers for lighting automatically bind the room loads to the connected devices in the space without commissioning or the use of any tools. Room controllers shall be provided to match the room lighting control requirements. The controllers will be simple to install, and will not have dip switches or potentiometers, or require special configuration for standard Plug n' Go applications. The control units will include the following features:
   1. Automatic room configuration to the most energy-efficient sequence of operation based upon the devices in the room.
   2. Simple replacement – Using the default automatic configuration capabilities, a room controller may be replaced with an off-the-shelf.
   3. Multiple room controllers connected together in a local network must automatically arbitrate with each other, without requiring any configuration or setup, so that individual load numbers are sequentially assigned using each controller's device ID's from highest to lowest.
   4. Device Status LEDs to indicate:
      a. Data transmission
      b. Device has power
      c. Status for each load
      d. Configuration status
   5. Quick installation features including:
      a. Standard junction box mounting
      b. Quick low voltage connections using standard RJ-45 patch cable

6. Based on individual configuration, each load shall be capable of the following behavior on power up following the loss of normal power:
   a. Turn on to 100%
   b. Turn off
   c. Turn on to last level
7. Each load shall at a minimum be configurable to operate in the following sequences based on occupancy:
   a. Auto-on/Auto-off (Follow on and off)
   b. Manual-on/Auto-off (Follow off only)
8. The polarity of each load output shall be reversible, via digital configuration, so that on is off and off is on.
9. UL 2043 plenum rated
10. Manual override and LED indication for each load
11. Dual voltage (120/277 VAC, 60 Hz), or 347 VAC, 60 Hz (selected models only). 120/277 volt models rated for 20A total load, derating to 16A required for some dimmed loads (forward phase dimming); 347 volt models rated for 15A total load; plug load controllers carry application-specific UL 20 rating for receptacle control.
12. Zero cross circuitry for each load
13. All digital parameter data programmed into an individual room controller or plug load controller shall be retained in non-volatile FLASH memory within the controller itself. Memory shall have an expected life of no less than 10 years.

B. On/Off Room Controllers shall include:
   1. One or two relay configuration
   2. Efficient 150 mA switching power supply
   3. Three RJ-45 DLM local network ports with integral strain relief and dust cover
   4. WattStopper product numbers: LMRC-101, LMRC-102

2.03 DIGITAL WALL OR CEILING MOUNTED OCCUPANCY SENSOR

A. Wall or ceiling mounted (to suit installation) passive infrared (PIR), ultrasonic or dual technology digital (passive infrared and ultrasonic) occupancy sensor.

B. Digital Occupancy Sensors shall provide graphic LCD display for digital calibration and electronic documentation. Features include the following:
   1. Digital calibration and pushbutton configuration for the following variables:
      a. Sensitivity – 0-100% in 10% increments
      b. Time delay – 1-30 minutes in 1 minute increments
      c. Test mode – Five second time delay
      d. Detection technology – PIR, Ultrasonic or Dual Technology activation and/or re-activation.
      e. Walk-through mode
   2. Load parameters including Auto/Manual-ON, blink warning, and daylight enable/disable when photosensors are included in the DLM local network.
   3. Programmable control functionality including:

a. Each sensor may be programmed to control specific loads within a local network.
b. Sensor shall be capable of activating one of 16 user-definable lighting scenes.
c. Adjustable retrigger time period for manual-on loads. Load will retrigger (turn on) automatically within a configurable period of time (default 10 seconds) after turning off.
d. On dual technology sensors, independently configurable trigger modes are available for both Normal (NH) and After Hours (AH) time periods. The retrigger mode can be programmed to use the following technologies:
e. Ultrasonic and Passive Infrared
f. Ultrasonic or Passive Infrared
g. Ultrasonic only
h. Passive Infrared only
i. Independently configurable sensitivity settings for passive infrared and ultrasonic technologies (on dual technology sensors) for both Normal (NH) and After Hour (AH) time periods.

4. One or two RJ-45 port(s) for connection to DLM local network.
5. Two-way infrared (IR) transceiver to allow remote programming through handheld commissioning tool and control by remote personal controls.
6. Device Status LEDs, which may be disabled for selected applications, including:
   a. PIR detection
   b. Ultrasonic detection
   c. Configuration mode
   d. Load binding
7. Assignment of occupancy sensor to a specific load within the room without wiring or special tools.
8. Manual override of controlled loads.
9. All digital parameter data programmed into an individual occupancy sensor shall be retained in non-volatile FLASH memory within the sensor itself. Memory shall have an expected life of no less than 10 years.

C. BACnet object information shall be available for the following objects:
   1. Detection state
   2. Occupancy sensor time delay
   3. Occupancy sensor sensitivity, PIR and Ultrasonic

D. Units shall not have any dip switches or potentiometers for field settings.

E. Multiple occupancy sensors may be installed in a room by simply connecting them to the free topology DLM local network. No additional configuration will be required.

F. WattStopper product numbers: LMPX, LMDX, LMPC, LMUC, LMDC

2.04 DIGITAL WALL SWITCHES

A. Low voltage momentary pushbutton switches in 1, 2, 3, 4, 5 and 8 button configuration. Wall switches shall include the following features:
   1. Two-way infrared (IR) transceiver for use with personal and configuration remote controls.
   2. Removable buttons for field replacement with engraved buttons and/or alternate color buttons. Button replacement may be completed without removing the switch from the wall.
   3. Configuration LED on each switch that blinks to indicate data transmission.
   4. Load/Scene Status LED on each switch button with the following characteristics:
      a. Bi-level LED
      b. Dim locator level indicates power to switch
      c. Bright status level indicates that load or scene is active
      d. Dimming switches shall include seven bi-level LEDs to indicate load levels using 14 steps.
   5. Programmable control functionality including:
      a. Button priority may be configured to any BACnet priority level, from 1-16, corresponding to networked operation allowing local actions to utilize life safety priority
      b. Scene patterns may be saved to any button other than dimming rockers. Once set, buttons may be digitally locked to prevent overwriting of the preset levels.
   6. All digital parameter data programmed into an individual wall switch shall be retained in non-volatile FLASH memory within the wall switch itself. Memory shall have an expected life of no less than 10 years.

B. Two RJ-45 ports for connection to DLM local network.

C. Multiple digital wall switches may be installed in a room by simply connecting them to the free topology DLM local network. No additional configuration shall be required to achieve multi-way switching.

D. The following switch attributes may be changed or selected using a wireless configuration tool:

E. Load and Scene button function may be reconfigured for individual buttons (from Load to Scene, and vice versa).
   1. Individual button function may be configured to Toggle, On only or Off only.
   2. Individual scenes may be locked to prevent unauthorized change.
   3. Fade Up and Fade Down times for individual scenes may be adjusted from 0 seconds to 18 hours.
   4. Ramp rate may be adjusted for each dimmer switch.
   5. Switch buttons may be bound to any load on any load controller or relay panel and are not load type dependant; each button may be bound to multiple loads.
   6. WattStopper product numbers: LMSW-101, LMSW-102. Available in white, light almond, ivory, grey, red and black; compatible with wall plates with decorator opening.

2.05 DIGITAL DAYLIGHTING SENSORS

A. Digital daylighting sensors shall work with load controllers and relay panels to provide automatic switching, bi-level, or tri-level or dimming daylight harvesting capabilities for any load type connected to the controller or panel. Daylighting sensors shall be interchangeable without the need for rewiring.
   1. Closed loop sensors measure the ambient light in the space and control a single lighting zone.
   2. Open loop sensors measure incoming daylight in the space, and are capable of controlling up to three lighting zones.
   3. Dual loop sensors measure both ambient and incoming daylight in the space to insure that proper light levels are maintained as changes to reflective materials are made in a single zone.

B. Digital daylighting sensors shall include the following features:
   1. The sensor's internal photodiode shall only measure lightwaves within the visible spectrum. The photodiode's spectral response curve shall closely match the entire photopic curve. The photodiode shall not measure energy in either the ultraviolet or infrared spectrums. The photocell shall have a sensitivity of less than 5% for any wavelengths less than 400 nanometers or greater than 700 nanometers.
   2. Sensor light level range shall be from 1-6,553 footcandles (fc).
   3. The capability of ON/OFF, bi-level or tri-level switching, or dimming, for each controlled zone, depending on the selection of load controller(s) and load binding to controller(s).
   4. For switching daylight harvesting, the photosensor shall provide a field-selectable deadband, or a separation, between the "ON Setpoint" and the "OFF Setpoint" that will prevent the lights from cycling excessively after they turn off.
   5. For dimming daylight harvesting, the photosensor shall provide the option, when the daylight contribution is sufficient, of turning lights off or dimming lights to a field-selectable minimum level.
   6. Photosensors shall have a digital, independently configurable fade rate for both increasing and decreasing light level in units of percent per second.
   7. Photosensors shall provide adjustable cut-off time. Cut-off time is defined by the number of selected minutes the load is at the minimum output before the load turns off. Selectable range between 0-240 minutes including option to never cut-off.
   8. Optional wall switch override shall allow occupants to reduce lighting level to increase energy savings or, if permitted by system administrator, raise lighting levels for a selectable period of time or cycle of occupancy.
   9. Integral infrared (IR) transceiver for configuration and/or commissioning with a handheld configuration tool, to transmit detected light level to wireless configuration tool, and for communication with personal remote controls.
   10. Configuration LED status light on device that blinks to indicate data transmission.
   11. Status LED indicates test mode, override mode and load binding.
   12. Recessed switch on device to turn controlled load(s) ON and OFF.

13. BACnet object information shall be available for the following daylighting sensor objects, based on the specific photocell's settings:
    a. Light level
    b. Day and night setpoints
    c. Off time delay
    d. On and off setpoints
    e. Up to three zone setpoints
    f. Operating mode – on/off, bi-level, tri-level or dimming
14. One RJ-45 port for connection to DLM local network.
15. A choice of accessories to accommodate multiple mounting methods and building materials. The photosensors may be mounted on a ceiling tile, skylight light well, suspended lighting fixture or backbox. Standard tube photosensors accommodate mounting materials from 0-0.62" thickness (LMLS-400, LMLS-500). Extended tube photosensors accommodate mounting materials from 0.62"-1.25" thickness (LMLS-400-L, LMLS-500-L). Mounting brackets are compatible with J boxes (LMLS-MB1) and wall mounting (LMLS-MB2).
16. Any load or group of loads in the room can be assigned to a daylighting zone
17. Each load within a daylighting zone can be individually enabled or disabled for discrete control (load independence).
18. All digital parameter data programmed into a photosensor shall be retained in non-volatile FLASH memory within the photosensor itself. Memory shall have an expected life of no less than 10 years.

C. Closed loop digital photosensors shall include the following additional features:
    1. An internal photodiode that measures light in a 100-degree angle, cutting off the unwanted light from bright sources outside of this cone.
    2. Automatic self-calibration, initiated from the photosensor, a wireless configuration tool or a PC with appropriate software.
    3. Automatically establishes application-specific setpoints following self-calibration. For switching operation, an adequate deadband between the ON and OFF setpoints shall prevent the lights from cycling; for dimming operation a sliding setpoint control algorithm with separate Day and Night setpoints shall prevent abrupt ramping of loads.
    4. WattStopper Product Number: LMLS-105.

2.06 LIGHTING CONTROL SCHEMATIC WIRING DIAGRAM

A. See the schematic diagram below for the proposed lighting control system design. System shall be from equally reputable manufacturers. The substituted products shall be, as a minimum, of the same quality, type, characteristics, technical features and capabilities, operational flexibility, controllability options etc. All substituted products must be pre-approved by the director prior to the bids. Failure to do so might result in rejection of the product and considered a contract delay.

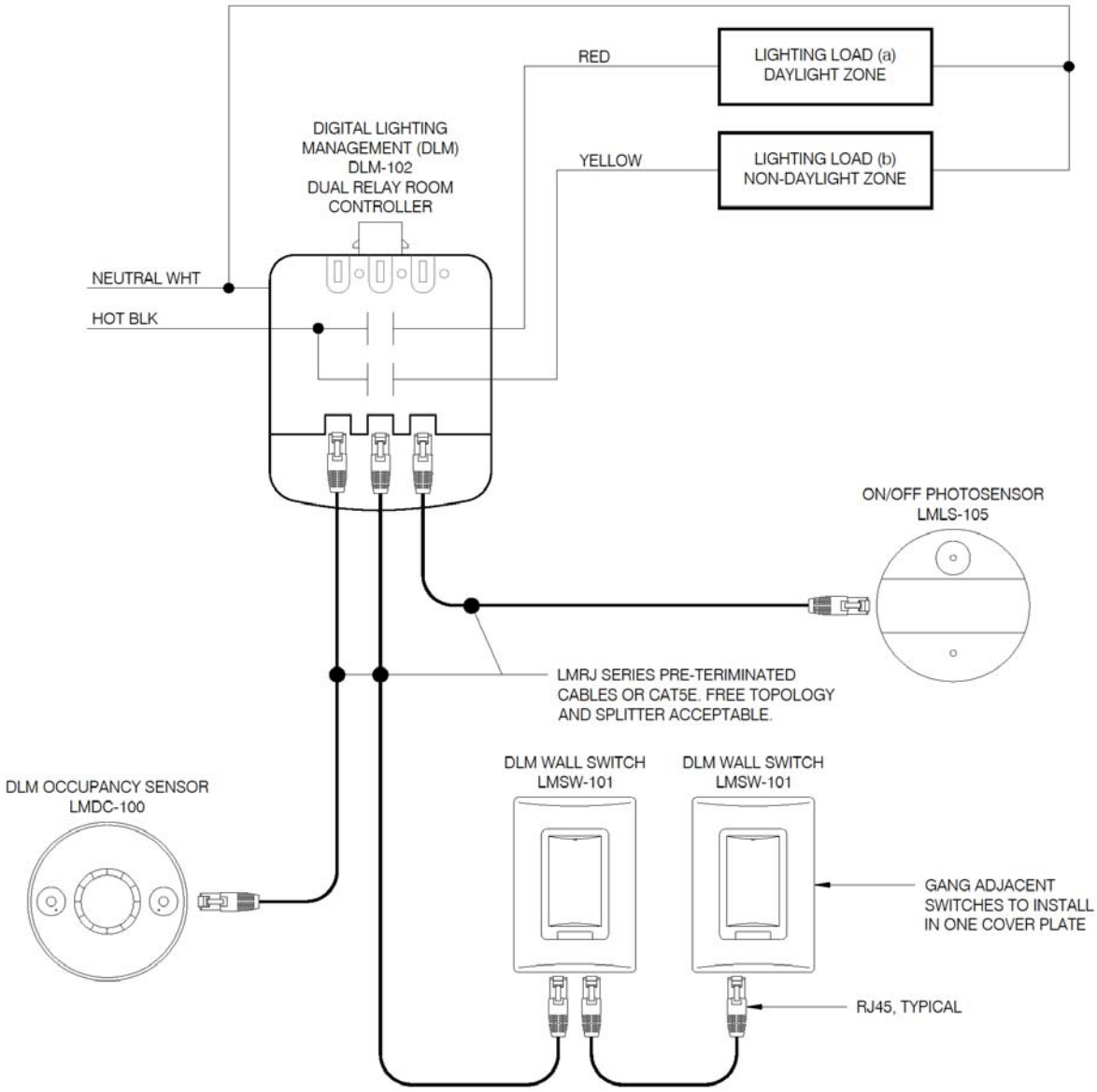

SEQUENCE OF OPERATION:
WHEN AMBIENT LIGHT LEVELS EXCEED THE OFF SET POINT, PHOTOSENSOR LMLS-105 TURNS THE DAYLIGHT ZONE LIGHTING LOAD (a) OFF. IT WILL TURN THE CONNECTED DAYLIGHT ZONE LIGHTING LOAD (a) BACK ON WHEN THE ON SET POINT IS TRIGGERED.

OCCUPANCY SENSOR LMDC-100 TO CONTROL BOTH LIGHTING LOAD (a) AND (b) ZONES FOR AUTOMATIC-ON, AUTOMATIC-OFF OPERATION

COORDINATE WITH MANUFACTURER FOR FULL OPERATIONAL DETAILS, ADJUSTMENTS AND CONNECTION REQUIREMENTS.

PART 3 – EXECUTION

3.01 OPTIONAL PRE-INSTALLATION MEETING

A. A factory authorized manufacturer's representative shall provide the electrical contractor a functional overview of the lighting control system prior to installation. The contractor shall schedule the pre-installation site visit after receipt of approved submittals to review the following:
   1. Confirm the location and mounting of all digital devices, with special attention to placement of occupancy and daylighting sensors.
   2. Review the specifications for low voltage control wiring and termination.
   3. Discuss the functionality and configuration of all products, including sequences of operation, per design requirements.
   4. Discuss requirements for integration with other trades.

3.02 CONTRACTOR INSTALLATION AND SERVICES

A. Contractor to install all devices and wiring in a professional manner. All line voltage connections to be tagged to indicate circuit and switched legs.

B. Contractor to install all room/area devices using manufacturer's factory-tested Cat 5e cable with pre-terminated RJ-45 connectors. If pre-terminated cable is not used for room/area wiring, the contractor is responsible for testing each field-terminated cable following installation, and shall supply the lighting controls manufactuerer with test results. Low voltage wiring topology must comply with manufacturer's specifications. Contractor shall route network wiring as shown in submittal drawings as closely as possible, and shall document final wiring location, routing and topology on as built drawings.

C. Install the work of this Section in accordance with manufacturer's printed instructions unless otherwise indicated. Before start up, contractor shall test all devices to ensure proper communication.

D. Calibrate all sensor time delays and sensitivity to guarantee proper detection of occupants and energy savings.
   1. Adjust time delay so that controlled area remains lighted while occupied.

E. Provide written or computer-generated documentation on the configuration of the system including room by room description including:
   1. Sensor parameters, time delays, sensitivities, and daylighting setpoints.
   2. Sequence of operation, (e.g. manual ON, Auto OFF. etc.)
   3. Load Parameters (e.g. blink warning, etc.)

F. Post start-up tuning – After 30 days from occupancy contractor shall adjust sensor time delays and sensitivities to meet the Owner's requirements. Provide a detailed report to the Architect / Owner of post start-up activit

3.03 OPTIONAL FACTORY SERVICES

A. Upon completion of the installation, the manufacturer's factory authorized representative shall start up and verify a complete fully functional system.

B. The electrical contractor shall provide both the manufacturer and the electrical engineer with three weeks written notice of the system start up and adjustment date.

C. Upon completion of the system start up, the factory-authorized technician shall provide the proper training to the owner's personnel on the adjustment and maintenance of the system.

3.04 OPTIONAL COMMISSIONING SUPPORT SERVICES

A. On this project, a commissioning agent will be hired to verify the installation and programming of all building systems, which includes the lighting control system. Manufacturer should include an extra day of technician’s time to review the functionality and settings of the lighting control hardware with the commissioning agent, including reviewing submittal drawings and ensuring that instructions on how to configure each device are readily available. Manufacturer is NOT responsible for helping the commissioning agent inspect the individual devices. It will be the commissioning agent’s responsibility to create and complete any forms required for the commissioning process, although the manufacturer or contractor may offer spreadsheets and/or printouts to assist the agent with this task.

B. The commissioning agent shall work with the electrical contractor during installation of the lighting control hardware to become familiar with the specific products. The agent may also accompany the manufacturer’s technicians during their start-up work to better understand the process of testing, calibration and configuration of the products. However, the contractor and manufacturer shall ensure that interfacing with the agent does not prevent them from completing the requirements outlined in the contract documents.

END OF SECTION

Pre-Functional Checklist

Project: OGS SOB Building #4 – OGS #45124

Project No. 11123671

SECTION: 260925

OCCUPANCY SENSORS FOR LIGHTING CONTROLS

1. Submittal / Approvals

Submittal. The above equipment and systems integral to them are complete and ready for functional testing. This pre-functional checklist is submitted for approval, subject to an attached list of outstanding items yet to be completed. A Statement of Correction will be submitted upon completion of any outstanding areas. None of the outstanding items preclude safe and reliable functional tests being performed.

Electrical Contractor	Date	Construction Contractor	Date

Pre-functional checklist items are to be completed as part of startup & initial checkout, preparatory to functional testing.

- This checklist does not take the place of the manufacturer's recommended checkout and startup procedures or report
- If this form is not used for documenting, one of similar rigor shall be used
- Contractors assigned responsibility for sections of the checklist shall be responsible to see that checklist items by their subcontractors are completed and checked off

Approvals. This filled-out checklist has been reviewed. Its completion is approved with the exceptions noted below.

Commissioning Agent	Date	Director's Representative	Date

2. Requested documentation submitted

Manufacturer's cut sheets	
Performance data	
O&M manuals	

3. Model verification

Equip Tag--->	
Manufacturer	
Model	

4. Installation Checks

Check	
Installed where indicated and/or where directed in field	
Test all installed wiring for opens and shorts	
Check and verify that AC wiring and low voltage control wiring are installed in separate raceways	
Verify proper operation	
Verify that there aren't any obstructions affecting proper operation	
Check and verify that the master station control buttons, operate the correct lighting fixtures, a/v devices, etc	
Adjust sensitivity so that controlled area is lighted when area is occupied	
Adjust time delay so that controlled area is lighted for 5 minutes after occupant leaves area	
For sensors that are equipped with light levels sensors, adjust light levels setting so that lights are off when there is sufficient natural light	

END OF CHECKLIST

Functional Test

Project: OGS SOB Building #4 – OGS #45124

Project No. 11123671

SECTION: 260925

OCCUPANCY SENSORS FOR LIGHTING CONTROLS

1. Submittal / Approvals

Submittal: The equipment and systems integral have undergone functional testing. The checklist items are complete and have been checked off only by parties having direct knowledge of the event, as marked below, respective to each responsible contractor. This functional checklist is submitted for approval, subject to an attached list of outstanding items yet to be completed. A Statement of Correction will be submitted upon completion of any outstanding areas.

Electrical Contractor	Date	Construction Contractor	Date

Approvals: This filled-out checklist has been reviewed. Its completion is approved with exceptions noted below.

Commissioning Agent	Date	Director's Representative	Date

1. Prerequisite Checklist

a. ____ The Pre-functional checklist is complete and the unit is ready for functional testing
b. ____ All A/E punchlist items for this equipment are corrected
c. ____ Safeties and operating ranges reviewed
d. ____ Sufficient clearance around equipment for servicing
e. ____ O&M Manuals provided

2. Testing Procedures and Record

No.	Testing Procedure	Expected Response	Pass Y/N
	Verify occupancy sensors proper operation		
1	Enter room with lights off	Lights turn on	

END OF TEST

Pre-Functional Checklist

Project: OGS SOB Building #4 – OGS #45124

Project No. 11123671

SECTION: 260943

NETWORK LIGHTING CONTROLS

1. Submittal / Approvals

Submittal. The above equipment and systems integral to them are complete and ready for functional testing. This pre-functional checklist is submitted for approval, subject to an attached list of outstanding items yet to be completed. A Statement of Correction will be submitted upon completion of any outstanding areas. None of the outstanding items preclude safe and reliable functional tests being performed.

Electrical Contractor	Date	Construction Contractor	Date

Pre-functional checklist items are to be completed as part of startup & initial checkout, preparatory to functional testing.

- This checklist does not take the place of the manufacturer's recommended checkout and startup procedures or report
- If this form is not used for documenting, one of similar rigor shall be used
- Contractors assigned responsibility for sections of the checklist shall be responsible to see that checklist items by their subcontractors are completed and checked off

Approvals. This filled-out checklist has been reviewed. Its completion is approved with the exceptions noted below.

Commissioning Agent	Date	Director's Representative	Date

2. Documentation Checks

Requested Documentation Submitted	
Manufacturer's cut sheets	
O&M Manuals	
Performance Data	

3. Installation Checks

Devices installed per manufacturer’s instructions and specifications	
Devices installed agree with shop drawings and specifications	
Fixture mounting, location, heights and clearances are per plans and specifications	
Lighting control system installed per plans, specifications and manufacturer’s recommendations	
Switches installed at correct height and have correct cover/escutcheon plate	
All zone circuits and inputs are correctly wired, circuits labeled	
All devices, and metal raceways, properly grounded	
Fixtures are properly grounded	
Panel(s) properly grounded	
Fixture support agrees with plans and spec’s, and manufacturer’s recommendation	
Fixtures plumb and level	
Fixtures coordinated with work of all other trades	
Controlling of fixtures consistent with design documents	
Proper lamps are installed	
Fixtures, lamps, reflectors and lens are clean	
General appearance good, no apparent damage	
Equipment labels affixed	
Layout and location of control panel(s) matches drawings	
Controlled components labeled/tagged	
Appropriate wiring used on electronic sensors	
Service space and clearances for panel(s) in compliance with manufacturer	
Environmental conditions according to manufacturer’s requirements	
Lighting control processor diagnostics performed	
Lighting control communications interconnect checked	
Ballasts free from excessive noise	

4. Lighting Fixture Model Verification

Fixture Designation	Description	Fixture Manufacturer	Fixture Model	Wattage

6. Specialty Lighting Component Model Verification

Fixture Designation	Description	Fixture Manufacturer	Fixture Model	Wattage
Exit Signs				
Battery Emergency Lighting				
Emergency Lamp Units				

7. Lighting Control System Component Verification

Lighting Control Component	Manufacturer	Model	Comments
Control Relays			
Pre-assembled Relay panels			
Relay Scanners			
Programmable Relay Scanners			
Local Wall Switches			
Outdoor Photocell Remote Sensor			
Indoor Task Area Daylight Sensor			
Indoor Task Area Daylight Sensor Reduced Power Ballasts			

END OF CHECKLIST

Functional Test

Project: OGS SOB Building #4 – OGS #45124

Project No. 11123671

SECTION: 260943

NETWORK LIGHTING CONTROLS

1. Submittal / Approvals

Submittal: The equipment and systems integral have undergone functional testing. The checklist items are complete and have been checked off only by parties having direct knowledge of the event, as marked below, respective to each responsible contractor. This functional checklist is submitted for approval, subject to an attached list of outstanding items yet to be completed. A Statement of Correction will be submitted upon completion of any outstanding areas.

Electrical Contractor	Date	Construction Contractor	Date

Approvals: This filled-out checklist has been reviewed. Its completion is approved with exceptions noted below.

Commissioning Agent	Date	Director's Representative	Date

1. Prerequisite Checklist

a. ____ The building lighting and controls pre-functional checklist has been completed and approved and is ready for functional testing

b. ____ All A/E punchlist items for this equipment are corrected

c. ____ Safeties and operating ranges reviewed

d. ____ Sufficient clearance around equipment for servicing

e. ____ O&M Manuals provided

f. ____ All control system functions for this and all interlocking systems are programmed and operable per contract documents, including final setpoints and schedules

g. ____ These functional test procedures reviewed and approved by installing contractor and vendors

2. Lighting Controller Type: (Pick one)

____ Part of EMS

____ Separate PC system

____ Stand-alone controllers (give quantity),

____ Stand-alone integrated into EMS.

3. Documentation:

Verify that full documentation of the controller is *permanently* on site and includes the following:

____ Specifications and features

____ List of loads and zones each relay controls attached

____ Contact number for additional assistance attached

____ Current written list of lighting controller schedules for all zones attached

____ Programming instructions attached

4. Verification of capabilities and performance:

Verify that the controller has the following features and capabilities: (check-mark denotes acceptance)

____ Programming capabilities via keypad or EMS interface.

____ Back-up power supply (automatically recharged)

____ The controlling time clock is reading the appropriate time.

5. **Verification of capabilities and performance:**

CRT No.	ROOM	LOCATION	CONTROL SCHEME	COMMENTS:

Day Type and Lighting Controller No.	Schedule of Lighting Controller (hour of day)			
	Area	Area	Area	Area
Weekdays				
Saturday				
Sunday				
Fixtures/rooms excluded from lighting controller				
Lighting controller verification type				
No. of local override switches				
Override switches tested				

Testing Procedures and Record – Exterior

No.	Req. ID No.	Testing Procedure	Expected Response	Pass Y/N
1		Near dusk, observe exterior lights until they come ON.	All exterior lights come on at dusk	
2		a) Change the parking lot light schedule OFF to be in 5 minutes b) Return schedule to normal.	a) Observe that the parking lot lights, designated by the approved schedule, shut OFF. Designated signage remains ON. b) Schedule returned to normal.	
3		Before daylight in the morning, observe the security lights ON. Wait until dawn.	When sufficiently light, security lights and signage lights shut OFF.	
4		**Return all changed control parameters and conditions to their pre-test values**		

END OF TEST

SECTION 265110

LIGHTING FIXTURES

PART 1 GENERAL

1.01 SUBMITTALS

A. Waiver of Submittals: The "Waiver of Certain Submittal Requirements" in Section 013300 does not apply to this Section.

B. Product Data: Catalog sheets, specifications and installation instructions, including:
   1. Technical information for each fixture that proves that its ballast meets specified requirements. Include data which proves proposed lamp and ballast combinations do not exceed specified total harmonic distortion.
   2. Candlepower distribution curves for each type fixture if different from Company or catalog number specified.
   3. Clearly identify or mark all the optional accessories that will be part of the standard product intended for this project.
   4. Manufacturers' standard product brochure or literature without highlighted information will be returned without any review.

C. Samples: One of each product if requested.

D. Provide all lighting fixtures submittal within 30 days of the contract award and as soon as the approved fixtures can be ordered. Provide fixtures from only the listed/designated reputable manufacturers' only.

E. Quality Control Submittals:
   1. List of Installations for Electronic Ballasts: If brand names other than those specified are proposed for use, furnish the name, address, and telephone number of at least 5 comparable installations which can prove the proposed products have operated satisfactorily for 1 year. The installations shall present a grand total of at least 5000 ballasts.

1.02 MAINTENANCE

A. Special Tools:
   1. Two tools to remove and install each type and size of fasteners on fixtures equipped with vandal resistant fasteners.

PART 2 PRODUCTS

2.02 LIGHTING FIXTURES

A. All fixtures shall be as specified in the lighting fixture schedule below and shall be from one of the three equally reputable manufacturers as noted in the

schedule. The substituted fixtures shall be, as a minimum, of the same quality, type, physical size and shape, lighting distribution and lighting coverage/foot candles values, finish etc. All substituted fixtures must be pre-approved by the director prior to the bids. Failure to do so might result in rejection of his product and contract delay, making him liable for his decision.

LIGHTING FIXTURE SCHEDULE

TYPE	DESCRIPTION	BASIS OF DESIGN MANUFACTURER	CATALOG NUMBER	LAMP	VOLTAGE	ALTERNATE MANUFACTURERS	REMARKS
A	2x4 RECESSED MOUNTED LED FIXTURE	COLUMBIA LIGHTING	LCAT24-35HLG-EDU	47W LED	277	LAMAR LIGHTING, LUMAX LIGHTING	
B	4" SQUARE LED DIRECTIONAL DOWN LIGHT FIXTURE	KURT VERSEN	J2335 21 35 27 D VS8 S FMH4 F RX	25W LED	277	VANTAGE LIGHTING, DASAL	
C	PENDANT MOUNTED DIRECT/ INDIRECT LIGHT FIXTURE	LITECONTROL	3L-P-ID-LPA-XX-XX-SOF-CX-35K-I075-D030-D10-1C-UNV-FAX	7.2W/LF	277	SOLAVANTI, AXIS LIGHTING	
F	4" SQUARE LED DOWN LIGHT FIXTURE	KURT VERSEN	J1334 15 35 27 D VS8 S FMH4 F RX	17WLED	277	VANTAGE LIGHTING, DASAL	
G2	PENDANT MOUNTED LINEAR LED FIXTURE IN WOOD SLAT CEILING	ARCHITECTURAL LIGHTING WORKS	LP2SDSPX XX HI/3500K 0/10V EXT/R XX 277 SB	11.3W/FT LED	277	STARFIRE LIGHTING, DAY-O-LITE	MOUNT FIXTURE FLUSH WITH BOTTOM OF WOOD SLAT, COORDINATE MOUNTING REQUIREMENTS WITH ARCHITECT AND CEILING MANUFACTURER
H	SURFACE/PENDANT MOUNTED LED UTILITY FIXTURE	COLUMBIA LIGHTING	LCL4-35ML-EU	48W LED	277	LAMAR LIGHTING, LUMAX LIGHTING	
I	WALL MOUNTED LED FIXTURE	OCL LIGHTING	IL1 S1SA 48 MW XX 1LD33/35 277	33W LED	277	WAC LIGHTING, SOLAVANTI	
J	WALL MOUNTED LED FIXTURE WITH INTEGRAL SENSOR	LAMAR LIGHTING	VOL48MFA35AS	43W LED	277	LUMINAIRE LED, LUMAX LIGHTING	SET STANDBY MODE FOR 10% NOMINAL LIGHT OUTPUT
K	SURFACE MOUNTED ENCLOSED AND GASKETED FIXTURE	COLUMBIA LIGHTING	LXEM4-35ML-RFP-EU	47W LED	120	THE LIGHT EDGE, LUMAX LIGHTING	
L	WALL/SLOT MOUNTED RECESSED PERIMETER LED LIGHT FIXTURE	LITECONTROL	60L-G-XX-XX-C1-35K-D045-NDM-1C-UNV	7W/FT LED	277	DAY-O-LITE, ELECTRIX LIGHTING	

M	WALL MOUNTED LED VANITY LIGHT	WAC LIGHTING	WS-77636-AL	30W LED	277	SOLAVANTI, ARCHITECTURAL LIGHITNG WORKS	
N1	4" SQUARE EXTERIOR LED DOWN LIGHT FIXTURE - MEDIUM OUTPUT	PRESCOLITE	LF4SQLEDG4-4SQLED6G435KWT-BXX	18.8W LED	277	VANTAGE LIGHTING, DASAL	
N2	4" SQUARE EXTERIOR LED DOWN LIGHT FIXTURE - HIGH OUTPUT	PRESCOLITE	LF4SQLEDG4-4SQLED7G435KWT-BXX	26.3W LED	277	VANTAGE LIGHTING, DASAL	
O	2x2 RECESSED MOUNTED LED FIXTURE	COLUMBIA LIGHTING	LCAT22-35MLG-EDU	30W LED	277	LAMAR LIGHTING, LUMAX LIGHTING	
P	EXTERIOR WALL MOUNTED FIXTURE	SPAULDING LIGHTING	TRP-30L40K-035-4-U-XX-SC0	34W LED	277	TERON LIGHTING, LURALINE	
Q	2" LED DOWN LIGHT FIXTURE	PRESCOLITE	D2LED277-2D9LED9L30K8WFL45	17W LED	277	VANTAGE LIGHTING, DASAL	
W	LED EMERGENCY WALL PACK FIXTURE	DUAL LITE	LZ2-03L	(2) 3W LED	277	LITHONIA LIGHITNG, COOPER LIGHTING	
X	EXIT SIGN - EDGE LIT	SIGNTEX	CRSNB-XRXBA-XX	2W LED	277	DUAL LITE, LITHONIA LIGHTING	
X1	EXIT SIGN - THERMOPLASTIC	DUAL LITE	LXURW	2.7W LED	277	LITHONIA LIGHITNG, COOPER LIGHTING	

NOTES:

1. PROVIDE FIXTURES WITH ALL NECESSARY ACCESSORIES TO ENSURE A COMPLETE AND OPERATIONAL SYSTEM.
2. COORDINATE WITH ARCHITECT FOR ALL FIXTURE FINISHES, LENS ACCESSORIES, CEILING TYPE AND MOUNTING REQUIREMENTS.
3. CONDUCTOR SIZE FEEDING ALL EMERGENCY LIGHT FIXTURES SHALL #10 AWG.
4. UNLESS OTHERWISE NOTED ON PLAN, ALL EMERGENCY LIGHTING SHALL BE FED VIA EMERGENCY GENERATOR POWER.
5. ALL DIMMER SWITCHES MUST BE COMPATIBLE WITH DIMMABLE BALLASTS. ALL SWITCHES MUST BE RATED FOR THE LOAD REQUIREMENTS OF THE ASSOCIATED LIGHTING CIRCUIT.
6. UNLESS OTHERWISE NOTED, ALL FLUORESCENT FIXTURES SHALL BE PROVIDED WITH 3500K LAMPS.
7. ALL APPLICABLE LIGHT FIXTURES, SWITCHES, BALLASTS AND ASSOCIATED ACCESSORIES MUST BE COMPATIBLE WITH THE LIGHTING CONTROL SYSTEM SERVING THE SPACE.

2.03 POWER SUPPLIES (DRIVERS) FOR LED LAMPS

A. Electronic power supply/driver for LED luminaires and lamps: Include the following features unless otherwise indicated:
   1. Driver shall be constant current type.
   2. 0-10v dimming
   3. UL Class 2 designed for use with any 12v or 24v UL class 2 devices
   4. Operating Ambient Temperature -40 to 150 deg F.
   5. Sound Rating: Class A
   6. DC control voltage shall have maximum peak to peak ripple of 10% VDC. Short-term transient voltage of control devices must not exceed 14 volts.

B. LED power supply/driver manufacturer shall state compatibility with submitted lighting control system, and areas where intended operation and lifetime may be impacted.

2.04 Lamps:

A. Lamps shall be by only reputable manufacturer, such as General Electric Co., GTE/Sylvania, or Philips Lighting Co. Note: Unless otherwise indicated lamp designations in fixture descriptions are GTE/Sylvania lamp ordering abbreviations. Lamps provided must meet or exceed the minimum 1991 NYS Energy Code Requirements.

B. LED LAMPS:
   1. LED modules shall be field serviceable from below in non-accessible ceilings. LED's shall be RoHS compliant, 85 CRI (minimum), with a maximum of 2.5 step McAdam ellipse color consistency. LED data shall be tested in compliance with IESNA LM-70, LM-80 and TM-21 protocol. Lamp life shall be 50,000 hours (minimum) at L70. Intended LED current (mA) and driver shall be fully compatible, as stated so by both manufacturers.

C. Labels: Equip each fixture with a label, located conspicuously inside of fixture, which states the type of lamps required for the fixture.

D. Additional Components: Equip fixtures with the following additional components, as applicable:
   1. Additional ballasts for night light or emergency light circuits where indicated on drawings.
   2. Plaster frames as required for installation of recessed and semi-recessed fixtures.
   3. Comply with requirements in other sections for channel- and angle-iron supports and nonmetallic channel and angle supports. The fixtures shall be supported in a such a way that it shall withstand the seismic category 2A forces without collapsing.
   4. Safety clips for fixtures installed in grid ceilings.
   5. End caps for individually mounted fixtures and end of continuous row fixtures.

6. Finishing collar or combination finishing collar/outlet box for surface mounted fixture used with exposed raceway:
   a. Finishing Collar: Same finish and peripheral dimensions as the fixture base, including provisions for mounting, slots to fit over raceway and of depth to cover outlet box and extend back to ceiling or wall.
   b. Combination Finishing Collar/Outlet Box: Same finish and peripheral dimensions as the fixture base, gage or thickness of metal as required by National Electrical Code, including provisions for mounting and knockouts or threaded bosses for entrance of raceway.

PART 3 EXECUTION

3.01 INSTALLATION

A. General: Install fixtures at locations indicated on the drawings. Prior to any installation or rough in, field coordinate the exact location with the other ceiling mounted devices, such as air registers/diffusers, lighting control devices/sensors, sprinkler system heads, fire alarm devices etc., and make necessary adjustment only after consultation with the project architect and the director.

B. Lay-in Ceiling Lighting Fixtures Supports: Use grid as a support element.
   1. Install ceiling support system rods or wires**,** independent of the ceiling suspension devices, for each fixture. Locate not more than 6 inches from lighting fixture corners.
   2. Support Clips: Fasten to lighting fixtures and to ceiling grid members at or near each fixture corner with clips that are UL listed for the application.
   3. Fixtures of Sizes Less Than Ceiling Grid: Install as indicated on reflected ceiling plans or center in acoustical panel, and support fixtures independently with at least two 3/4-inch metal channels spanning and secured to ceiling tees.
   4. Install at least one independent support rod or wire from structure to a tab on lighting fixture. Wire or rod shall have breaking strength of the weight of fixture at a safety factor of 3.

C. Suspended Lighting Fixture Support:
   1. Pendants and Rods: Where longer than 48 inches, brace to limit swinging.
   2. Stem-Mounted, Single-Unit Fixtures: Suspend with twin-stem hangers.
   3. Continuous Rows: Use tubing or stem for wiring at one point and tubing or rod for suspension for each unit length of fixture chassis, including one at each end.
   4. Do not use grid as support for pendant luminaires. Connect support wires or rods to building structure.
   5. Prior to order, confirm and coordinate fixture mounting height, and dimensions/length of required support.

D. Finishing Collar or Combination Finishing Collar/Outlet Box (Surface Mounted Fixture Used With Exposed Raceway):
   1. Provide finishing collar where surface mounted fixture is installed on an exposed raceway outlet box and the fixture base is larger than the outlet box.
   2. Provide combination finishing collar/outlet box where surface mounted fixture is not indicated to be installed on an exposed raceway outlet box, but raceway cannot be run directly into fixture body due to fixture design.

END OF SECTION

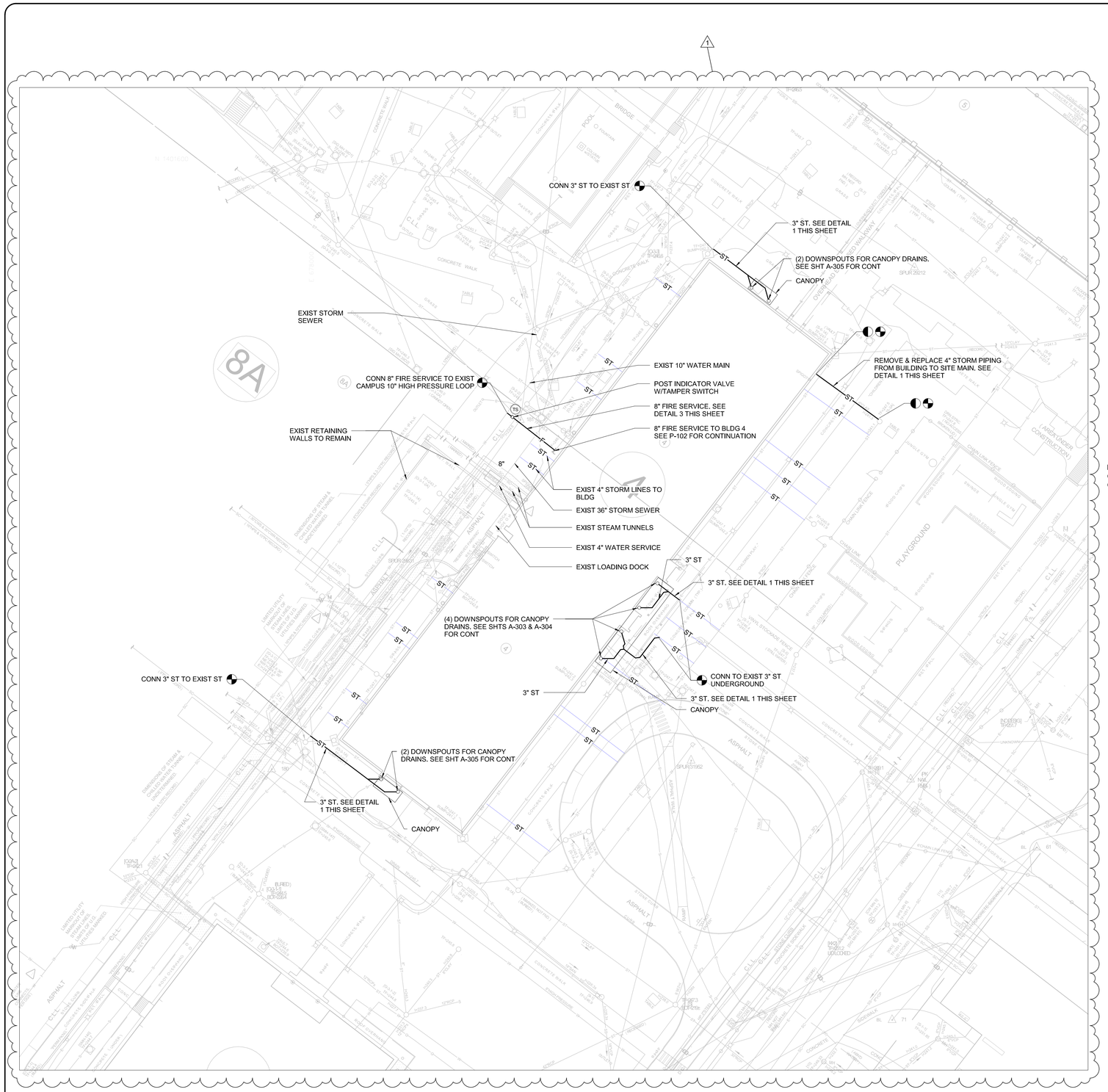

2 A-012 SITE PLAN
1" = 40'-0"

NOTE:
1. POUR ALL CONCRETE AGAINST UNDISTURBED SOIL.

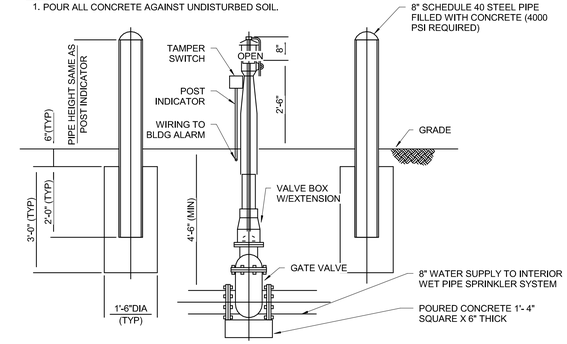

4 A-012 POST INDICATOR VALVE
12" = 1'-0"

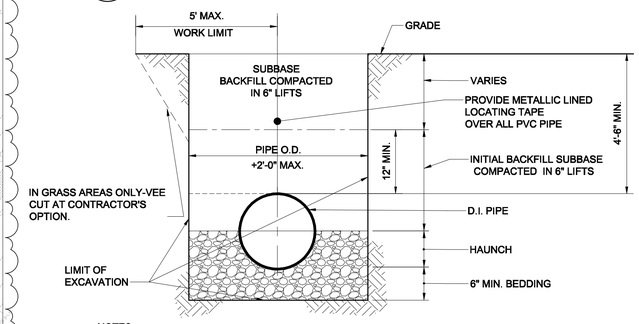

NOTES:
1. HAUNCH & BEDDING PER NYSDOT GRADATION TABLE 703.
2. HYDROHAMMERS ARE NOT TO BE USED 3' OR LESS FROM TOP OF PIPE.
3. SIDES OF TRENCH VERTICAL FOR TRENCHES NOT MORE THAN 5 FEET DEEP. OVER FIVE FEET DEEP SIDES SHALL BE SLOPED VERTICALLY AS REQUIRED FOR VERTICAL FACE.
4. THE CONTRACTOR SHALL BE RESPONSIBLE FOR SHORING AND/OR SLOPING OF EXCAVATIONS AS NECESSARY TO ACCOMPLISH THE WORK, ENSURE THE PROTECTION OF WORKERS IN THE EXCAVATIONS AND ADJACENT UTILITIES, ROADWAYS AND STRUCTURES. THE CONTRACTOR SHALL BE RESPONSIBLE FOR ALL COSTS RELATED TO ANY DAMAGE OF EXISTING FEATURES TO REMAIN DURING EXCAVATION ACTIVITIES.

3 A-012 FIRE MAIN TRENCH
1/2" = 1'-0"

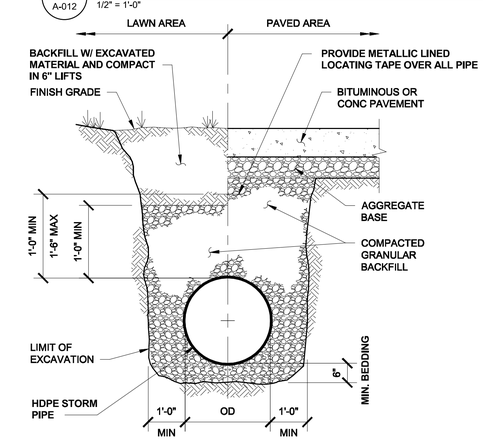

NOTES
1. BEDDING PER NYSDOT GRADATION TABLE 703.
2. HYDROHAMMERS ARE NOT TO BE USED 3' OR LESS FROM TOP OF PIPE.
3. SIDES OF TRENCH VERTICAL FOR TRENCHES NOT MORE THAN 5 FEET DEEP. OVER FIVE FEET DEEP SIDES SHALL BE SLOPED VERTICALLY AS REQUIRED FOR VERTICAL FACE.
4. THE CONTRACTOR SHALL BE RESPONSIBLE FOR SHORING AND/OR SLOPING OF EXCAVATIONS AS NECESSARY TO ACCOMPLISH THE WORK, ENSURE THE PROTECTION OF WORKERS IN THE EXCAVATIONS AND ADJACENT UTILITIES, ROADWAYS AND STRUCTURES. THE CONTRACTOR SHALL BE RESPONSIBLE FOR ALL COSTS RELATED TO ANY DAMAGE OF EXISTING FEATURES TO REMAIN DURING EXCAVATION ACTIVITIES.

1 A-012 STORM PIPE TRENCH
1/2" = 1'-0"

REVISED DRAWING
09/15/16

NEW YORK STATE OF OPPORTUNITY. Office of General Services
DESIGN & CONSTRUCTION

CONSULTANT

STV 100 Years
225 Park Avenue South
New York, NY 10003
t 212.777.4400 f 212.529.5237
www.stvinc.com

LI SALTZMAN ARCHITECTS, P.C.
ARCHITECTURE AND PRESERVATION

WARNING:
THE ALTERATION OF THIS MATERIAL IN ANY WAY, UNLESS DONE UNDER THE DIRECTION OF A COMPARABLE PROFESSIONAL, I.E. ARCHITECT FOR AN ARCHITECT, ENGINEER FOR AN ENGINEER, OR LANDSCAPE ARCHITECT FOR A LANDSCAPE ARCHITECT, IS A VIOLATION OF THE NEW YORK STATE EDUCATION LAW AND/OR REGULATIONS AND IS A CLASS 'A' MISDEMEANOR.

N

REGISTERED ARCHITECT DAVID MILES SALTZMAN No. 011823 THE STATE OF NEW YORK

CONTRACT:
CONSTRUCTION

TITLE:
ABATE HAZARDOUS MATERIALS & RENOVATE BUILDING 4

LOCATION:
STATE OFFICE BUILDING CAMPUS
1220 WASHINGTON AVE.
ALBANY, NY 12226

CLIENT:
OFFICE OF GENERAL SERVICES

KEY PLAN:

MARK	DATE	DESCRIPTION
1	09/15/16	ADDENDUM No. 1
	07/11/16	BID DOCUMENTS

PROJECT NUMBER:	45124 - C
DESIGNED BY:	DH
DRAWN BY:	DS
FIELD CHECK:	RW
APPROVED:	RW
SCALE:	As indicated

SHEET TITLE:
UTILITIES SITE PLAN

DRAWING NUMBER:
A-012

SHEET OF

9/16/2016 11:20:34 AM
38624 PLOT SHEET 1

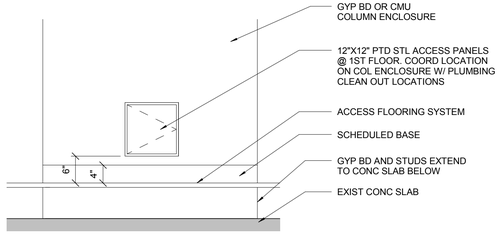

9 A-512 TYP ELEV @ COLUMN ACCESS PANEL
3/4" = 1'-0"

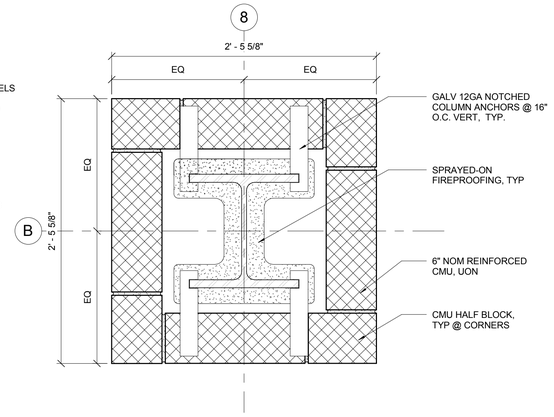

8 A-512 TYP CMU COLUMN ENCLOSURE
1 1/2" = 1'-0"

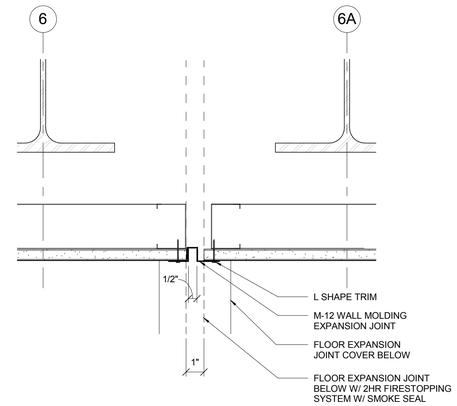

7 A-512 TYP COL COVER EXPANSION JOINT
3" = 1'-0"

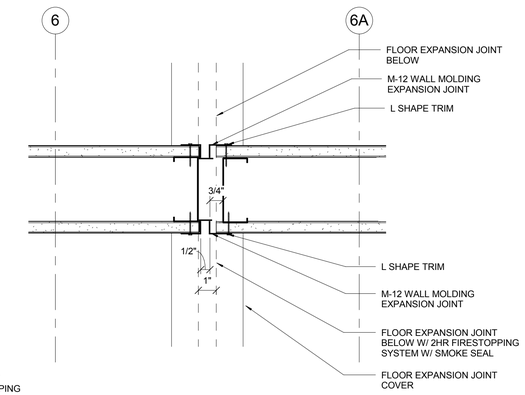

6 A-512 TYP WALL EXPANSION JOINT
3" = 1'-0"

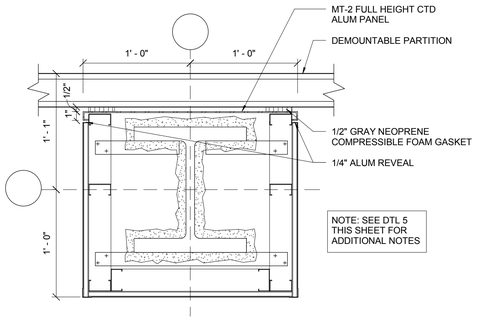

10 A-512 TYP COLUMN ENCLOSURE DTL @ DEMOUNTABLE PARTITION
1 1/2" = 1'-0"

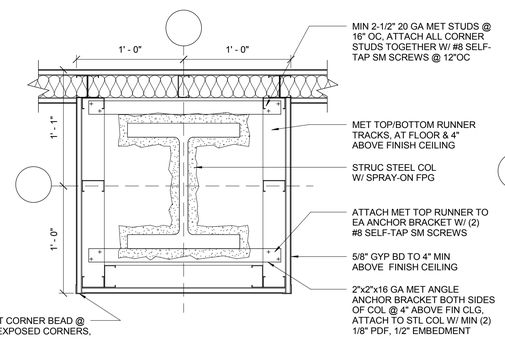

5 A-512 TYP COLUMN AND WALL ENCLOSURE DETAIL
1 1/2" = 1'-0"

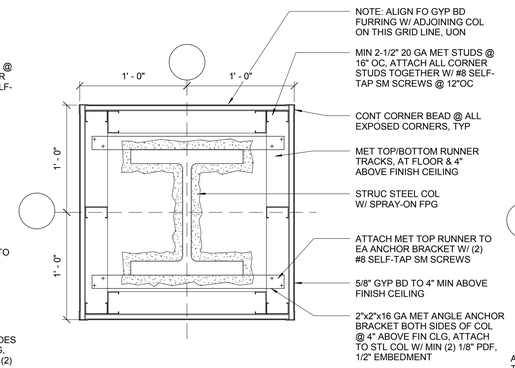

4 A-512 TYP COLUMN ENCLOSURE DETAIL
1 1/2" = 1'-0"

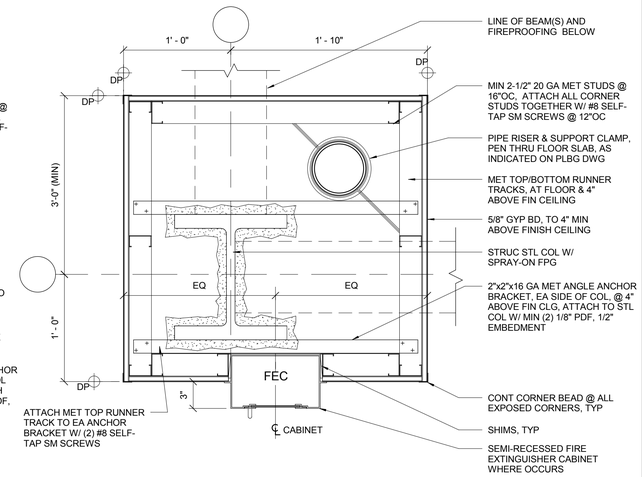

3 A-512 TYP GYP BD COL & PIPE RISER FURRING
1 1/2" = 1'-0"

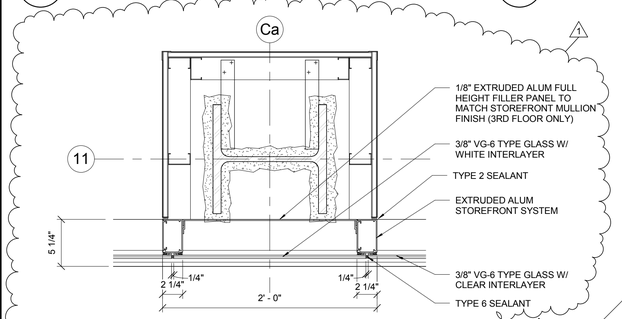

11 A-512 STOREFRONT PLAN DETAIL
1 1/2" = 1'-0"

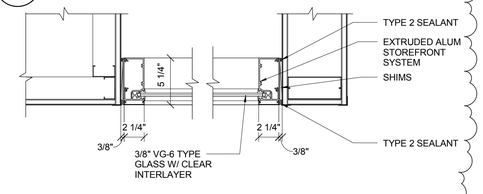

12 A-512 STOREFRONT PLAN DETAIL
1 1/2" = 1'-0"

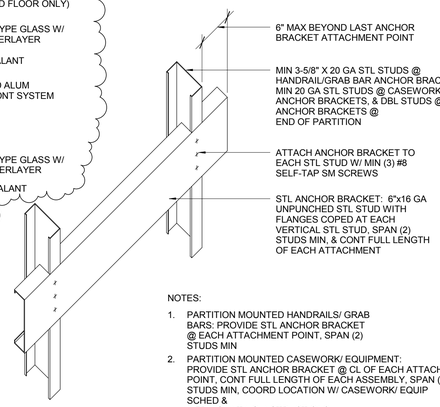

NOTES:

1. PARTITION MOUNTED HANDRAILS/ GRAB BARS: PROVIDE STL ANCHOR BRACKET @ EACH ATTACHMENT POINT, SPAN (2) STUDS MIN
2. PARTITION MOUNTED CASEWORK/ EQUIPMENT: PROVIDE STL ANCHOR BRACKET @ CL OF EACH ATTACH POINT, CONT FULL LENGTH OF EACH ASSEMBLY, SPAN (3) STUDS MIN, COORD LOCATION W/ CASEWORK/ EQUIP SCHED & MFR MOUNTING INSTRUCTIONS

2 A-512 TYP METAL STUD ANCHOR BRACKET
1 1/2" = 1'-0"

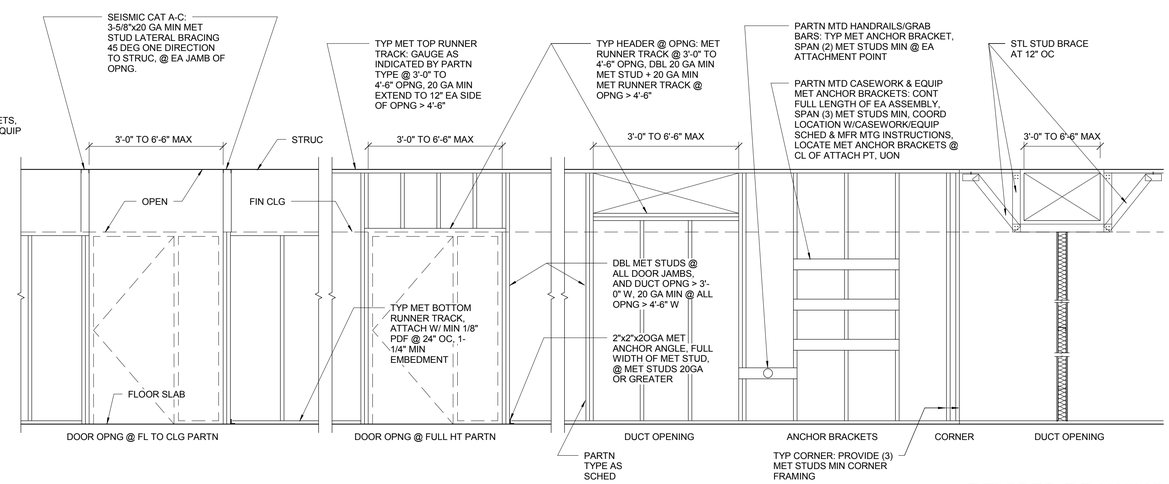

1 A-512 TYP STL STUD FRAMING DIAGRAM
3/8" = 1'-0"

REVISED DRAWING
09/15/16

NEW YORK STATE OF OPPORTUNITY. Office of General Services

DESIGN & CONSTRUCTION

CONSULTANT

STV 100 Years

225 Park Avenue South
New York, NY 10003
t 212.777.4400 f 212.529.5237
www.stvinc.com

LI SALTZMAN ARCHITECTS, P.C.
ARCHITECTURE AND PRESERVATION

WARNING:
THE ALTERATION OF THIS MATERIAL IN ANY WAY, UNLESS DONE UNDER THE DIRECTION OF A COMPARABLE PROFESSIONAL, I.E. ARCHITECT FOR AN ARCHITECT, ENGINEER FOR AN ENGINEER, OR LANDSCAPE ARCHITECT FOR A LANDSCAPE ARCHITECT, IS A VIOLATION OF THE NEW YORK STATE EDUCATION LAW AND/OR REGULATIONS AND IS A CLASS 'A' MISDEMEANOR.

N

REGISTERED ARCHITECT DAVID MILES ZUSKIN No. 011835 STATE OF NEW YORK

CONTRACT:
CONSTRUCTION

TITLE:
ABATE HAZARDOUS MATERIALS & RENOVATE BUILDING 4

LOCATION:
STATE OFFICE BUILDING CAMPUS
1220 WASHINGTON AVE.
ALBANY, NY 12226

CLIENT:
OFFICE OF GENERAL SERVICES

KEY PLAN:

MARK	DATE	DESCRIPTION
1	09/15/16	ADDENDUM No. 1
	07/11/16	BID DOCUMENTS

PROJECT NUMBER:	45124 - C
DESIGNED BY:	DH
DRAWN BY:	DS
FIELD CHECK:	RW
APPROVED:	RW
SCALE:	As indicated

SHEET TITLE:
TYP PARTITION & COLUMN ENCLOSURE DTLS

DRAWING NUMBER:
A-512

SHEET OF

9/15/2016 11:49:28 PM
3902A PLOT SHEET

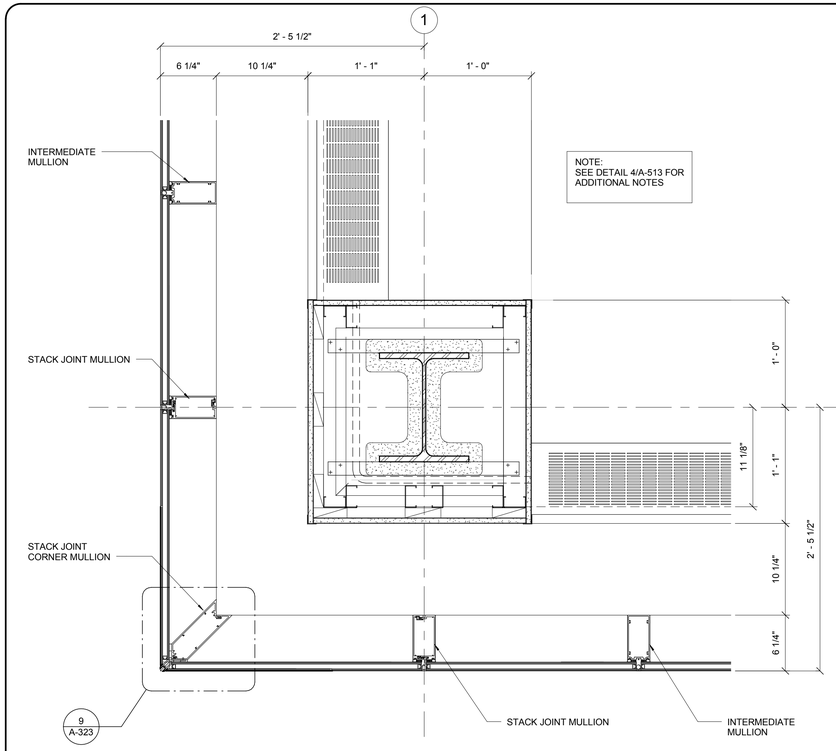

4 A-514 **A-PLAN-DTL-116**
1 1/2" = 1'-0"

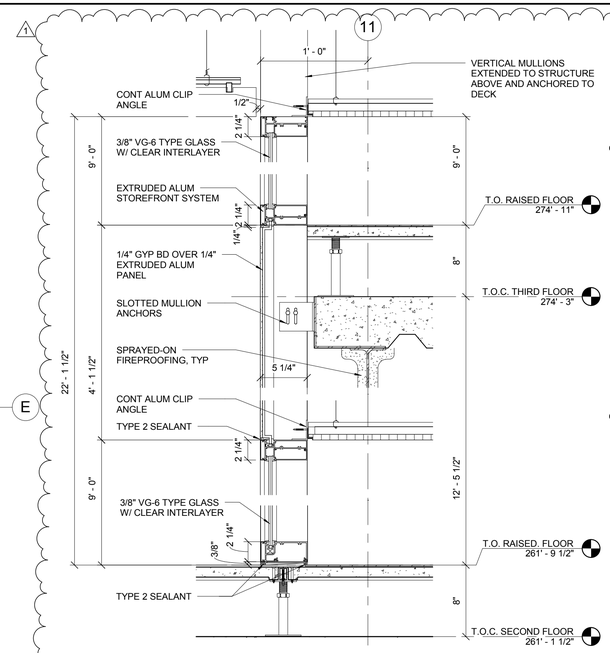

5 A-514 **INTERIOR STOREFRONT DETAIL**
1 1/2" = 1'-0"

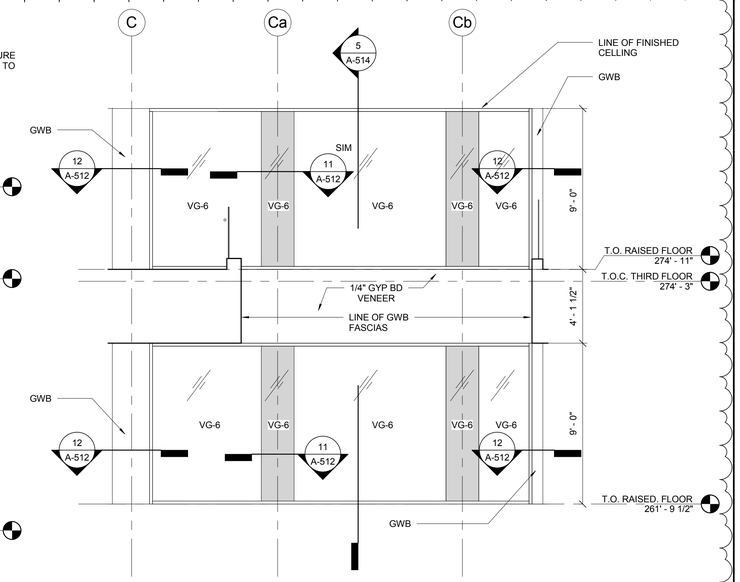

6 A-514 **INTERIOR STOREFRONT ELEVATION**
1/4" = 1'-0"

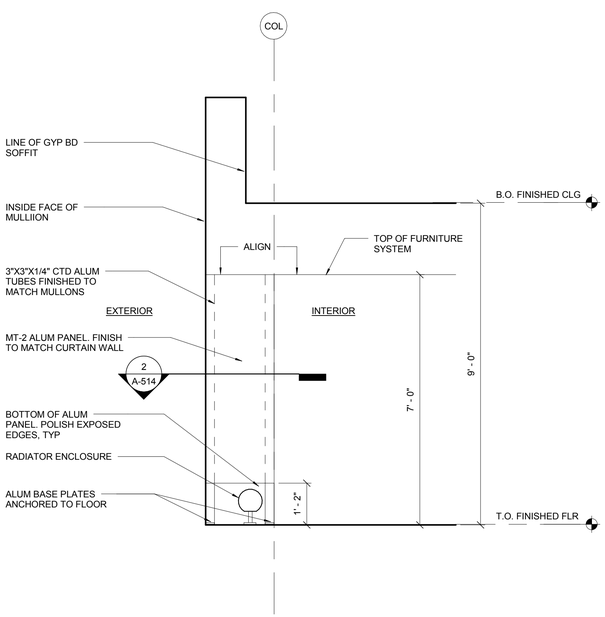

3 A-514 **TYP FURNITURE SYSTEM FILLER PANEL ELEVATION - 2ND & 3RD FLOORS**
1/2" = 1'-0"

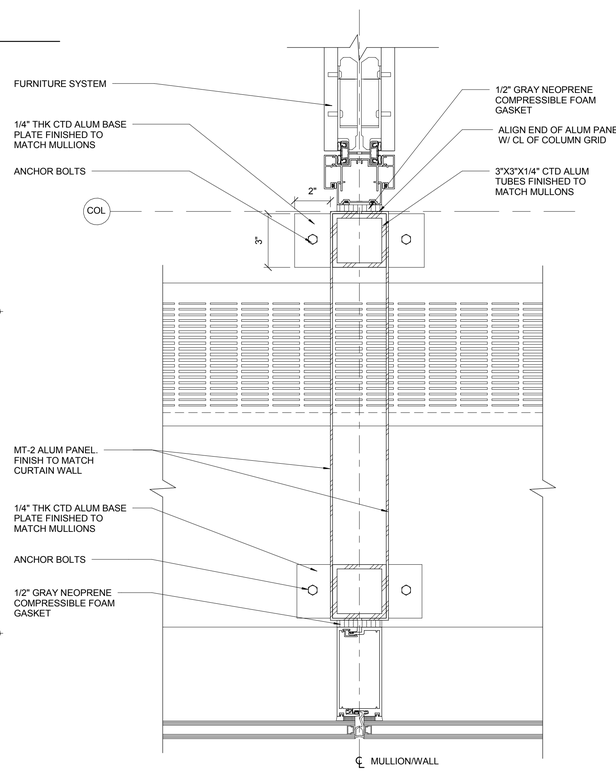

2 A-514 **TYP FURNITURE SYSTEM TO MULL DETAIL - 2ND & 3RD FLOORS**
3" = 1'-0"

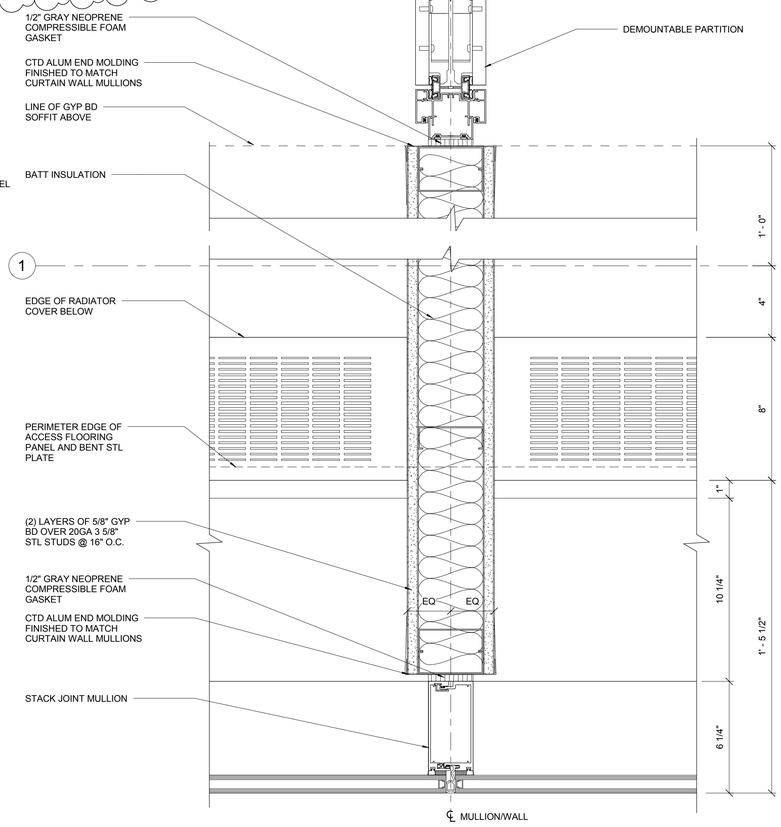

1 A-514 **TYP DEMOUNTABLE PARTITION TO MULL DTL - 2ND & 3RD FLOORS**
3" = 1'-0"

REVISED DRAWING
09/15/16

NEW YORK STATE OF OPPORTUNITY. Office of General Services
DESIGN & CONSTRUCTION

CONSULTANT

STV 100 Years
225 Park Avenue South
New York, NY 10003
t 212.777.4400 f 212.529.5237
www.stvinc.com

LI SALTZMAN ARCHITECTS, P.C.
ARCHITECTURE AND PRESERVATION

WARNING:
THE ALTERATION OF THIS MATERIAL IN ANY WAY, UNLESS DONE UNDER THE DIRECTION OF A COMPARABLE PROFESSIONAL, I.E. ARCHITECT FOR AN ARCHITECT, ENGINEER FOR AN ENGINEER, OR LANDSCAPE ARCHITECT FOR A LANDSCAPE ARCHITECT, IS A VIOLATION OF THE NEW YORK STATE EDUCATION LAW AND/OR REGULATIONS AND IS A CLASS 'A' MISDEMEANOR.

N

REGISTERED ARCHITECT DAVID MILES ZINKIN No. 011831 STATE OF NEW YORK

CONTRACT:
CONSTRUCTION

TITLE:
ABATE HAZARDOUS MATERIALS & RENOVATE BUILDING 4

LOCATION:
STATE OFFICE BUILDING CAMPUS
1220 WASHINGTON AVE.
ALBANY, NY 12226

CLIENT:
OFFICE OF GENERAL SERVICES

KEY PLAN:

MARK	DATE	DESCRIPTION
1	09/15/16	ADDENDUM No. 1
	07/11/16	BID DOCUMENTS

PROJECT NUMBER:	45124 - C
DESIGNED BY:	DH
DRAWN BY:	DS
FIELD CHECK:	RW
APPROVED:	RW
SCALE:	As indicated

SHEET TITLE:
TYP PARTITION DETAILS

DRAWING NUMBER:
A-514

SHEET OF

9/15/2016 4:31:19 PM
39524 PLOT SHEET 1

ELECTRICAL GENERAL NOTES

1. INSTALLATION OF ALL WORK SHALL BE IN ACCORDANCE WITH THE FOLLOWING REGULATIONS, CODES, ETC.
   A. LOCAL CODES AND ORDINANCES
   B. THE EDITION OF THE NATIONAL ELECTRICAL CODE NFPA 70 (NEC 2014, IECC 2012) IN EFFECT.
2. ELECTRICAL SYSTEMS SHALL BE GROUNDED PER ARTICLE 250 OF THE NATIONAL ELECTRICAL CODE.
3. INFORM THE DIRECTOR'S REPRESENTATIVE PRIOR TO BEGINNING CONSTRUCTION AND PRIOR TO COMPLETION OF CONSTRUCTION TO ALLOW SUFFICIENT TIME FOR COORDINATION OF EXISTING BUILDING ACTIVITIES WITH THE CONSTRUCTION WORK.
4. IF MATERIAL OR EQUIPMENT IS INSTALLED BEFORE IT IS APPROVED, ELECTRICAL CONTRACTOR SHALL BE LIABLE FOR ITS REMOVAL AND REPLACEMENT AT NO ADDITIONAL CHARGE IF IN THE OPINION OF THE ARCHITECT OR ENGINEER, THE MATERIAL OR EQUIPMENT DOES NOT MEET THE INTENT OF THE DRAWINGS AND/OR SPECIFICATIONS.
5. INCLUDE IN THE WORK, WITHOUT EXTRA COST, ANY LABOR, MATERIALS, SERVICES, APPARATUS AND DRAWINGS IN ADDITION TO CONTRACT DOCUMENTS IN ORDER TO COMPLY WITH ALL APPLICABLE LAWS, INDICATED AND/OR SPECIFIED.
6. ALL MATERIALS AND WORK SHALL BE ACCORDING TO PROJECT SPECIFICATIONS.
7. NUMBER OF WIRES MAY NOT BE INDICATED FOR ALL CIRCUITS, ONLY THOSE WHERE CLARIFICATION IS NECESSARY. PROVIDE THE NUMBER AND SIZE OF CONDUCTORS AS NECESSARY FOR THE PROPER FUNCTION OF THE SYSTEM WHETHER SPECIFICALLY INDICATED ON PLAN OR NOT.
8. PROVIDE ACCESS PANELS FOR ALL INACCESSIBLE JUNCTION BOXES AS REQUIRED BY THE N.E.C.
9. COORDINATE WORK WITH ALL TRADES TO AVOID INTERFERENCE.
   A. DETERMINE INTERFERENCE BEFORE WORK IS FABRICATED OR INSTALLED. BECOME THOROUGHLY FAMILIAR WITH ALL DETAILS OF WORK AND WORKING CONDITIONS AND COORDINATE WORK DURING PRELIMINARY STAGES TO ENSURE ACTUAL ERECTION WILL PROCEED WITHOUT INTERFERENCE. COORDINATION IS OF PARAMOUNT IMPORTANCE AND NO REQUESTS FOR ADDITIONAL PAYMENT WILL BE CONSIDERED WHERE REQUEST IS BASED ON INTERFERENCE.
   B. WHERE JOB CONDITIONS REQUIRE REASONABLE DEVIATIONS FROM CONTRACT DOCUMENTS, MAKE DEVIATIONS WITHOUT ADDITIONAL COST TO DIRECTOR, AFTER OBTAINING APPROVAL OF ARCHITECT.
   C. PROVIDE MAXIMUM PRACTICAL SPACE FOR OPERATION, REPAIR, REMOVAL, AND TESTING OF ELECTRICAL EQUIPMENT. DEVIATIONS MAY BE MADE TO PROVIDE REQUIRED ACCESSIBILITY PROVIDED THEY ARE APPROVED BY THE DIRECTORS OR THE ARCHITECTS.
   D. KEEP CONDUITS, WIRE WAYS AND SIMILAR ITEMS AS CLOSE AS POSSIBLE TO CEILING, WALLS AND COLUMNS IN ORDER TO TAKE UP MINIMUM AMOUNT OF SPACE. ALL WORK TO BE INSTALLED IN A NEAT AND WORK MAN LIKEMANNER.
   E. INCLUDE IN THE WORK, WITHOUT EXTRA COST, ANY LABOR, MATERIALS, SERVICES, APPARATUS, AND DRAWINGS IN ADDITION TO CONTRACT DOCUMENTS, IN ORDER TO COMPLY WITH ALL APPLICABLE LAWS, INDICATED AND/OR SPECIFIED. PROVIDE ALL ELECTRICAL EQUIPMENT WITH ALL NECESSARY ASSOCIATED ACCESSORIES AND CONDUIT INFRASTRUCTURE AS REQUIRED TO ENSURE A COMPLETE AND OPERATIONAL SYSTEM AT NO ADDITIONAL COST TO DIRECTOR.
   F. PROVIDE ACCESS TO AND CLEARANCES AROUND ELECTRICAL EQUIPMENT AS REQUIRED BY THE N.E.C
10. COORDINATE WITH MECHANICAL, PLUMBING AND OTHER TRADES TO PROVIDE ALL EQUIPMENT ASSOCIATED WITH THEIR RESPECTIVE TRADES WITH NECESSARY WIRING AND CONDUIT INFRASTRUCTURE FOR ALL SENSORS, AND CONTROL SYSTEMS AS REQUIRED.
11. REFER TO ARCHITECTURAL DRAWINGS FOR THE EXACT LOCATION, ELEVATION, MOUNTING HEIGHTS AND DETAILS OF ALL LIGHT FIXTURES AND DEVICES. REPORT ANY DISCREPANCIES TO THE ARCHITECT IMMEDIATELY.
12. ALL NEW SLAB PENETRATIONS MUST BE X-RAYED OR RADAR PRIOR TO CORE DRILLING. OBTAIN APPROVAL FROM DIRECTOR'S REPRESENTATIVE PRIOR TO ANY CORE DRILLING.
13. PROVIDE ALL FLASH WARNING LABLES AT ALL PANELBOARDS AND SWITCHGEAR, AS REQUIRED BY THE CODE.
14. MC CABLE IS ALLOWED FOR LIGHTING BRANCH CIRCUITING ABOVE ACCESSIBLE CEILINGS.

120V BRANCH CIRCUIT WIRING CONDUCTOR SIZE

DEPENDING ON BRANCH CIRCUIT RUN LENGTH FROM PANELBOARD TO THE LAST DEVICE ON THE BRANCH CIRCUIT, INCREASE THE BRANCH CIRCUIT WIRE SIZE AS PER THE TABLE BELOW.

MAXIMUM #10 WIRE SHALL BE USED FOR GENERAL RECEPTACLE CIRCUIT WIRING.

LENGTH (FEET)	VOLTAGE (V)	AMPACITY (A)	WIRE SIZE (AWG TYP.)
0-66	120	20	#12
0-102	120	20	#10

ELECTRICAL SYMBOL LIST

(STANDARD SYMBOLS ONLY, ALL SYMBOLS MAY NOT BE APPLICABLE TO THIS PROJECT)

REFER TO SPECIFICATION SECTIONS 265110 AND 265300 FOR LIGHTING FIXTURE SPECIFICATIONS.

- EXIT SIGN LIGHTING FIXTURES ON EMERGENCY LIGHTING CIRCUIT
- TYPICAL INTERIOR LIGHTING FIXTURES
- TYPICAL INTERIOR LIGHTING FIXTURES ON EMERGENCY LIGHTING CIRCUIT
- WALL-MOUNTED DUPLEX OR QUAD RECEPTACLE. 20A/125V/2P/3W (GROUNDED) NEMA 5-20R. OUTLETS MAY HAVE THE FOLLOWING SUBSCRIPTS:
  - EWC : ELECTRIC WATER COOLER
  - GFI : GROUND FAULT INTERRUPTER
  - P : PROJECTOR RECEPTACLE
  - WP : WEATHER PROOF OUTLET WITH PROTECTIVE COVER
  - REF : REFRIGERATOR
- FLUSH MOUNTED ADA COMPLIANT COMBINATION DUPLEX/QUADRUPLEX POWER POKE THRU OUTLET. COORDINATE POKE THRU FINISH, EXACT LOCATION AND REQUIREMENTS WITH ARCHITECT AND COMMUNICATION VENDOR
- WALL/FLOOR MOUNTED SPECIAL PURPOSE OUTLET. COORDINATE NEMA CONFIGURATION WITH EQUIPMENT VENDOR
- WALL MOUNTED ABOVE COUNTER RECEPTACLE
- P — RECESSED CEILING MOUNTED DUPLEX OR QUAD NEMA 5-20R RECEPTACLE: 20A/125V/2P/3W
  - P : PROJECTOR RECEPTACLE
- WALL-MOUNTED DUPLEX OR QUADRUPLEX TAMPER PROOF RECEPTACLE. 20A/125V/2P/3W (GROUNDED) NEMA 5-20R.
- $ — SINGLE POLE TOGGLE SWITCH
- 3$LV — LOW VOLTAGE TWO BUTTON SWITCH
  - 3 : INDICATES 3-WAY SWITCH
- 3$D — LOW VOLTAGE DIMMER SWITCH WITH MOMENTARY CONTACT
  - 3 : INDICATES 3-WAY SWITCH
- $T — TIMER SWITCH WITH PRE-FLICKERING WARNING AND INTEGRAL MANUAL OVERRIDE
- $K — KEY OPERATED SWITCH
- $M — MOTOR RATED SWITCH WITH THERMAL OVERLOAD CURRENT PROTECTION. MOUNTED @ 44" TO BOTTOM OF SWITCH OR UNIT MOUNTED
- 2VS — WALL/CEILING MOUNTED LOW VOLTAGE OCCUPANCY SENSOR CONFIGURED AS AUTO-ON, AUTO-OFF, UON. PROVIDE TIME SETTING FOR 30 MINUTES OR AS DIRECTED BY ARCHITECT AND DIRECTOR
  - D : INDICATES DIMMER SWITCH
- DVS — WALL/CEILING MOUNTED LOW VOLTAGE VACANCY SENSOR CONFIGURED AS MANUAL ON/AUTO OFF, UON. PROVIDE TIME SETTING FOR 15 MINUTES OR AS DIRECTED BY ARCHITECT AND DIRECTOR
  - D : INDICATES DIMMER SWITCH
- MD — WALL/CEILING/FLOOR MOUNTED JUNCTION BOX. FIELD COORDINATE EXACT LOCATION AND MOUNTING HEIGHT. DEVICES MAY HAVE THE FOLLOWING SUBSCRIPTS:
  - MD : MOTORIZED DAMPER
- JB — JUNCTION BOX POWER FEED FOR RECEPTACLES ON FULL HEIGHT DEMOUNTABLE PARTITIONS AND 7' HIGH SYSTEM FURNITURE PARTITIONS
- J — NON-FUSIBLE DISCONNECT SWITCH
- 60/45 J — FUSIBLE DISCONNECT SWITCH. TOP NUMBER INDICATES FRAME RATING. BOTTOM NUMBER INDICATES FUSED RATING
- 60/45 J — COMBINATION STARTER DISCONNECT SWITCH. TOP NUMBER INDICATES FRAME RATING. BOTTOM NUMBER INDICATES FUSED RATING
- M — MOTOR - SEE FLOOR PLANS AND MECHANICAL SCHEDULE FOR RATING
- T — DRY TYPE TRANSFORMER, SEE FLOOR PLANS AND POWER RISER FOR SIZE
- 120/208V ELECTRICAL PANEL
- 480/277V ELECTRICAL PANEL
- LP-2 — CIRCUIT HOMERUN TO DESIGNATED PANEL. NUMBER OF ARROWS INDICATE NUMBER OF CIRCUITS AND TEXT DENOTES PANELBOARD. HOMERUN WIRING SHALL INCLUDE 2#12+1# 12G-3/4" C. EACH CIRCUIT HOMERUN SHALL BE PROVIDED WITH DEDICATED NEUTRAL
- UNDERGROUND OR PLATFORM WIRING/CONDUIT
- 2 — KEYED DRAWING NOTE
- SPLIT CIRCUIT
- WALL MOUNTED EMERGENCY POWER OFF (EPO) SWITCH. MOUNTED @48" AFF, UON
- GROUND BUS BAR
- CONDUIT UP
- CONDUIT DOWN
- AA — CONTINUOUS CIRCUIT
- SR — EMERGENCY SHUNT RELAY
- CC#-# — BOSCH 5000 SERIES DOME CAM
- CR# #A — CARD READER WITH NO PIGGYBACK FEATURE PROGRAMMED - SENTROL MAGLOCK FOR LOCKING
- IC# — REMOTE INTERCOM STATION
- M# — WALL/ CEILING MOUNT DUAL TECH MOTION DETECTOR
- KD — OFFICER DESK KEYED DOOR RELEASE OR PUSH BUTTON
- KBD — CCTV SYSTEM KEYBOARD
- C# — SECURITY DOOR CONTACT
- DS — DAYLIGHT SENSOR
- C — CONVERTER
- DH — DOOR HOLDER
- SR — EMERGENCY SHUNT RELAY
- C — ROOM CONTROLLER LIGHTING CONTROL MODULE

ELECTRICAL SYMBOL LIST

FIRE ALARM SYMBOL LIST

- H / H-H — CEILING/WALL MOUNTED FIRE ALARM HEAT DETECTOR
- H RF / H Tx/Rx — HEAT BEAM DETECTOR (REFLECTOR/TRANSMITTER-RECEIVER)
- FS / TS — FLOW SWITCH/TAMPER SWITCH
- MM — MONITOR MODULE
- CM — CONTROL MODULE
- RL — REMOTE INDICATING LAMP FOR DUCT SMOKE DETECTORS
- F — WALL MOUNTED FIRE ALARM SYSTEM MANUAL PULL STATION
- S EL / S-H — CEILING/WALL MOUNTED FIRE ALARM SMOKE DETECTOR
  - EL : INDICATES DEVICE DEDICATED FOR ELEVATOR RECALL FUNCTION
  - R/T : BEAM SMOKE DETECTOR TRANSMITTER/RECEIVER
  - RE : BEAM SMOKE DETECTOR REFLECTOR
- D S — FIRE ALARM DUCT SMOKE DETECTOR
  - S : SUPPLY SIDE
  - R : RETURN SIDE
- 15cd AV / 15cd AV-H — CEILING/WALL MOUNTED FIRE ALARM COMBINATION AUDIO (HORN)/VISUAL DEVICE, ADA COMPLIANT NUMBER DENOTES CANDELA INTENSITY RATING, MINIMUM 15cd
- 15cd V / 15cd V — CEILING/WALL MOUNTED FIRE ALARM VISUAL DEVICE (STROBE), ADA COMPLIANT NUMBER DENOTES CANDELA INTENSITY RATING, MINIMUM 15cd
- A / A — CEILING/WALL MOUNTED FIRE ALARM AUDIO (HORN) DEVICE.
- FACP — FIRE ALARM CONTROL PANEL
- FAAP — FIRE ALARM ANNUNCIATOR PANEL
- FATC — FIRE ALARM TERMINAL CABINET
- DACT — DIGITAL ALARM COMMUNICATOR TRANSMITTER
- F — FIREFIGHTER'S COMMUNICATION JACK, MOUNTED AT 48" AFF

SYSTEMS FURNITURE

- J (EFBFF) / 2 — JUNCTION BOX POWER FEED FOR WORKSTATIONS. COORDINATE WITH FURNITURE MANUFACTURER FOR SIZE OF JUNCTION BOXES AND ARCHITECT FOR EXACT MOUNTING TYPE, LOCATION.
  - GENERAL DUTY DUPLEX RECEPTACLE (MAX. 4 PER CIRCUIT).

SYSTEMS FURNITURE WIRING WITH EIGHT 8 WIRES. SHARED NEUTRAL WIRE SHALL BE #10 AWG. VERIFY SYSTEM FURNITURE WIRING CONFIGURATION PRIOR TO WIRING. PROVIDE FINAL MODIFICATION OF THE WHIP CONNECTION IF NEED TO MEET THE ABOVE DESIGNATED CIRCUITS. BASIS OF DESIGN: LEGRAND WALKERFLEX SYSTEM.

ABBREVIATIONS

(NOTE : ALL ABBREVIATIONS MAY NOT APPEAR ON THE DRAWINGS)

A	AMPERE
AFF	ABOVE FINISHED FLOOR
AWG	AMERICAN WIRE GAUGE
BRK	BREAKER
C	CONDUIT
CB	CIRCUIT BREAKER
CP	CONDENSATE PUMP
D	EXISTING TO BE DEMOLISHED
DISCSW	DISCONNECT SWITCH
DP	DISTRIBUTION PANEL
DWG	DRAWING
DACT	DIGITAL ALARM COMMUNICATOR TRANSMITTER
E, EX	EXISTING TO REMAIN
EG	EQUIPMENT GROUND
EM	DEVICE ON EMERGENCY CIRCUIT
EMT	ELECTRICAL METALLIC TUBING
EW	EMERGENCY WHITE (NIGHT) LIGHT
EWH	ELECTRIC WATER HEATER
F.L.A.	FULL LOAD AMPS
FAAP	FIRE ALARM ANNUNCIATOR PANEL
FACP	FIRE ALARM CONTROL PANEL
FATC	FIRE ALARM TERMINAL CABINET
G, GND	GROUND
GFI	GROUND FAULT INTERRUPTER
GND	GROUND
HP	HORSE POWER
IG	INTERRUPTER ISOLATED GROUND
KVA	KILOVOLT-AMPS
KW	KILOWATT
MCB	MAIN CIRCUIT BREAKER
MD	MOTORIZED DAMPER
MLO	MAIN LUGS ONLY
MDP	MAIN DISTRIBUTION PANEL
N	NEW
NEC	NATIONAL ELECTRICAL CODE
NF	NON FUSED
N/L	NIGHT LIGHT FIXTURE ON A TIMER
NTS	NOT TO SCALE
P	POLE
PH, Ø	PHASE
PNL	PANEL
PSRH	PROJECT STANDARD RECEPTACLE HEIGHT
PSSH	PROJECT STANDARD SWITCH HEIGHT
R	RELOCATED AT NEW LOCATION
RGS	RIGID GALVANIZED STEEL
RR	REMOVE AND RELOCATE
S.N.	SOLID NEUTRAL
SM	MOTOR THERMAL SWITCH CONTROL
SWBD	SWITCHBOARD
TEL.	TELEPHONE
T, XFMR	TRANSFORMER
TYP	TYPICAL
U.H.	UNIT HEATER
U.O.N.	UNLESS OTHERWISE NOTED
V	VOLTS
W	WATTS
WP	WEATHERPROOF

REVISED DRAWING
09/15/16

NEW YORK STATE OF OPPORTUNITY. Office of General Services
DESIGN & CONSTRUCTION

CONSULTANT

STV 100 Years
225 Park Avenue South
New York, NY 10003
t 212.777.4400 f 212.529.5237
www.stvinc.com

SETTY

WARNING:
THE ALTERATION OF THIS MATERIAL IN ANY WAY, UNLESS DONE UNDER THE DIRECTION OF A COMPARABLE PROFESSIONAL, I.E. ARCHITECT FOR AN ARCHITECT, ENGINEER FOR AN ENGINEER, OR LANDSCAPE ARCHITECT FOR A LANDSCAPE ARCHITECT, IS A VIOLATION OF THE NEW YORK STATE EDUCATION LAW AND/OR REGULATIONS AND IS A CLASS 'A' MISDEMEANOR.

N

STATE OF NEW YORK · CONRAD D DELA CRUZ · 089768 · LICENSED PROFESSIONAL ENGINEER
09/15/2016

CONTRACT: ELECTRICAL

TITLE: ABATE HAZARDOUS MATERIALS & RENOVATE BUILDING 4

LOCATION: STATE OFFICE BUILDING CAMPUS
1220 WASHINGTON AVE.
ALBANY, NY 12226

CLIENT: OFFICE OF GENERAL SERVICES

KEY PLAN:

MARK	DATE	DESCRIPTION
4	09/15/16	ADDENDUM No. 1
3	07/11/16	BID DOCUMENTS
2	06/10/16	FINAL COMPLIANCE
1	03/21/16	FINAL FOR REVIEW

PROJECT NUMBER:	45124 - E
DESIGNED BY:	VL/SM
DRAWN BY:	DAT
FIELD CHECK:	CD
APPROVED:	CD
SCALE:	NOT TO SCALE

SHEET TITLE: ELECTRICAL GENERAL NOTES, SYMBOLS AND ABBREVIATIONS

DRAWING NUMBER: E-001

9/15/2016 5:16:15 PM
SHEET

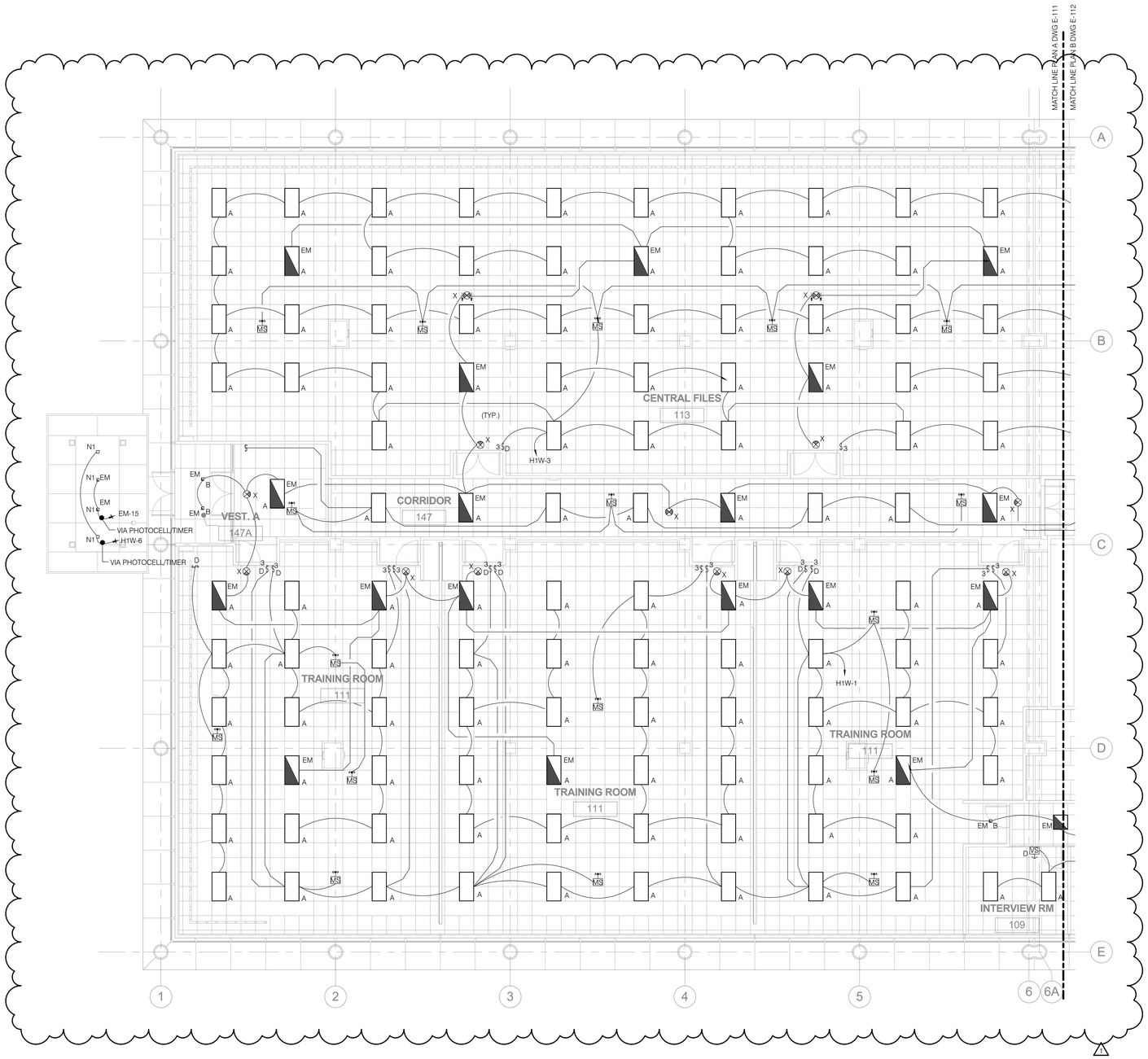

GENERAL NOTES

1. REFER TO DRAWING E-001 FOR ELECTRICAL GENERAL NOTES, LEGENDS AND ABBREVIATIONS, SPECIFICATION SECTIONS 265110 AND 265300 FOR LIGHTING FIXTURE SCHEDULE AND DRAWING E-602 TO E-609 FOR PANEL SCHEDULES.
2. COORDINATE WITH ARCHITECT TO VERIFY ALL ELEVATIONS & DETAILS FOR EXACT LOCATION OF ELECTRICAL FIXTURE AND DEVICES.
3. COORDINATE ALL FLOOR, WALL AND CEILING MOUNTED DEVICE LOCATIONS WITH ARCHITECT PRIOR TO INSTALLATION.
4. AT THE COMPLETION OF CONSTRUCTION, CLEAN LENSES AND REFLECTORS OF ALL LIGHTING FIXTURE SO AS TO RENDER THEM FREE OF ANY MATERIAL, SUBSTANCE OR FILM FOREIGN TO THE FIXTURE. BLEMISHED, DAMAGED OR UNSATISFACTORY FIXTURE SHALL BE REPLACED IN A SATISFACTORY MANNER.
5. CONNECT ALL EMERGENCY LIGHTS TO DESIGNATED EMERGENCY PANEL WITH 2 #10 AWG + 1 # 10 G IN 3/4"C.
6. REFER TO SPECIFICATION SECTION 260943 FOR LIGHTING CONTROL WIRING SCHEMATIC FOR PROPOSED LIGHTING CONTROL SYSTEM INFORMATION.
7. LIGHTING FIXTURES WITH ASSOCIATED SWITCHES, OCCUPANCY SENSORS AND DAYLIGHT SENSORS IN ALL AREAS ENCLOSED IN A DASHED LINE BOX ARE TO BE CONTROLLED VIA A LOW VOLTAGE ROOM CONTROLLER MODULE. REFER TO SPECIFICATION SECTION 260923 FOR ADDITIONAL INFORMATION AND SCHEMATIC WIRING DIAGRAM. ALL LIGHTING FIXTURES OUTSIDE OF THESE BOXED AREAS ARE TO BE CONTROLLED BY LOCAL SWITCHES AND LOW VOLTAGE OCCUPANCY SENSORS AND POWER PACKS WITHOUT ROOM CONTROLLER MODULES.

REVISED DRAWING
09/15/16

NEW YORK STATE OF OPPORTUNITY. Office of General Services

DESIGN & CONSTRUCTION

CONSULTANT

STV 100 Years

225 Park Avenue South
New York, NY 10003
t 212.777.4400 f 212.529.5237
www.stvinc.com

SETTY

WARNING:
THE ALTERATION OF THIS MATERIAL IN ANY WAY, UNLESS DONE UNDER THE DIRECTION OF A COMPARABLE PROFESSIONAL, I.E. ARCHITECT FOR AN ARCHITECT, ENGINEER FOR AN ENGINEER, OR LANDSCAPE ARCHITECT FOR A LANDSCAPE ARCHITECT, IS A VIOLATION OF THE NEW YORK STATE EDUCATION LAW AND/OR REGULATIONS AND IS A CLASS 'A' MISDEMEANOR.

N

STATE OF NEW YORK · CONRAD D DELA CRUZ · 089768 · LICENSED PROFESSIONAL ENGINEER
09/15/2016

CONTRACT:
ELECTRICAL

TITLE:
ABATE HAZARDOUS MATERIALS & RENOVATE BUILDING 4

LOCATION:
STATE OFFICE BUILDING CAMPUS
1220 WASHINGTON AVE.
ALBANY, NY 12226

CLIENT:
OFFICE OF GENERAL SERVICES

KEY PLAN:

A	B	C

MARK	DATE	DESCRIPTION
4	09/15/16	ADDENDUM No. 1
3	07/11/16	BID DOCUMENTS
2	06/10/16	FINAL COMPLIANCE
1	03/21/16	FINAL FOR REVIEW

PROJECT NUMBER:	45124 - E
DESIGNED BY:	VL/SM
DRAWN BY:	DAT
FIELD CHECK:	CD
APPROVED:	CD
SCALE:	1/8" = 1'-0"

SHEET TITLE:
ELECTRICAL FIRST FLOOR LIGHTING PLAN A

DRAWING NUMBER:
E-111

SHEET 4 OF 56

9/15/2016 9:09:07 PM
36x24 PLOT SHEET

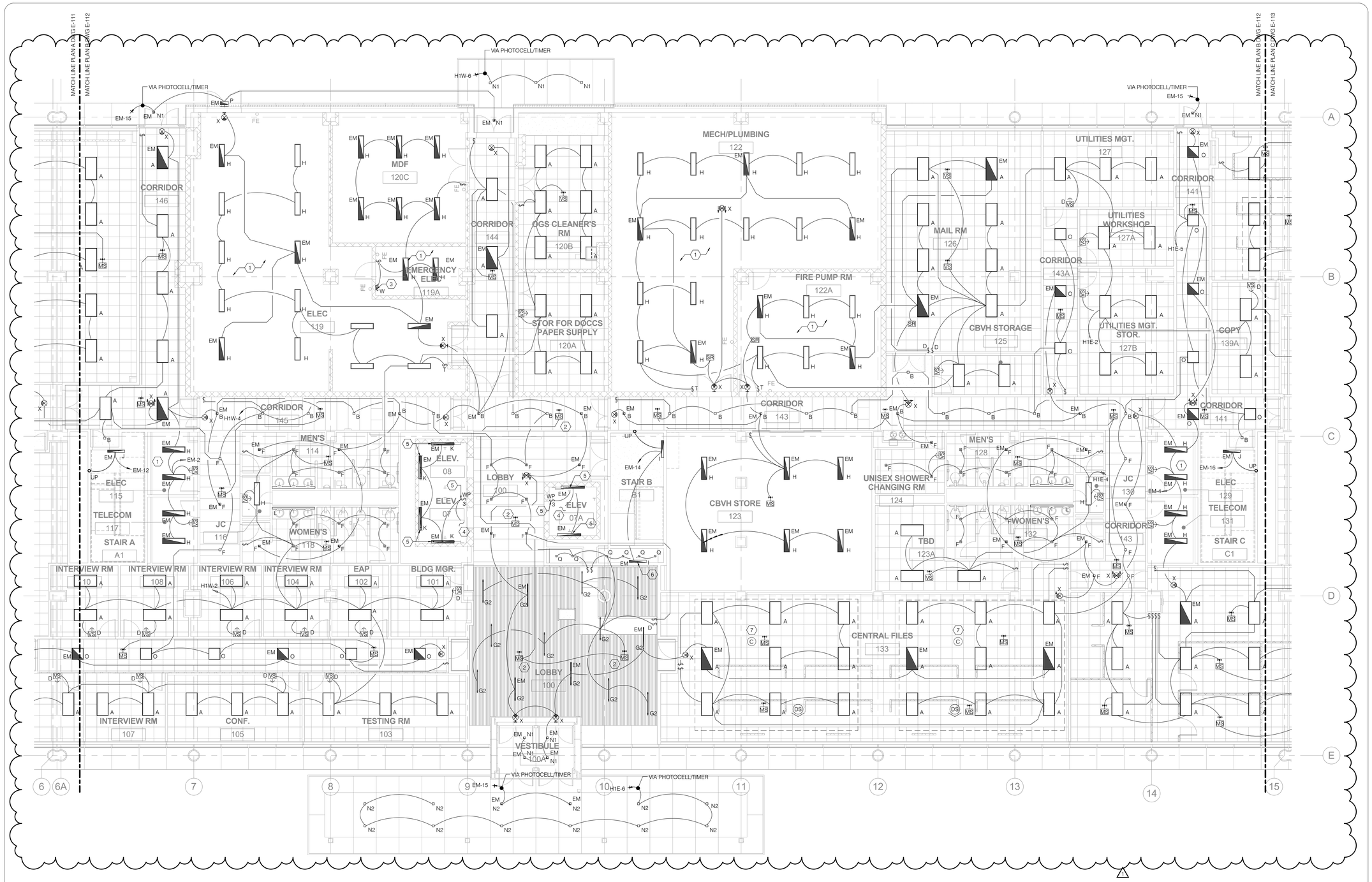

GENERAL NOTES

1. REFER TO DRAWING E-111 FOR LIGHTING GENERAL NOTES.

SHEET KEY NOTES

1. FIELD COORDINATE THE EXACT LOCATION OF ALL LIGHTING FIXTURES IN THIS ROOM WITH ALL DISCIPLINES AND CONTRACTORS TO AVOID OBSTRUCTION WITH ALL MISCELLANEOUS EQUIPMENT, PIPING, SPRINKLERS AND DUCT WORK. LIGHT FIXTURES MAY BE WALL OR CEILING MOUNTED AS NEEDED. ALL FIXTURES IN THIS ROOM ARE TO BE PROVIDED WITH WIRE GUARD.
2. SET ALL OCCUPANCY SENSORS SERVING LOBBY-100 AREA FOR 60 MINUTES TIME OUT. 1
3. CONNECT UNSWITCHED AHEAD OF THE LOCAL SWITCH.
4. CONNECT TYPE 'K' FIXTURES IN THE ELEVATOR PIT TO THE GFI RECEPTACLE CIRCUIT IN PIT. LIGHTS SHOULD BE 120V AND SHALL CONNECTED TO THE LINE SIDE OF THE GFI RECEPTACLE. SEE POWER PLAN E-212 FOR RECEPTACLE LOCATION. PROVIDE THREE WAY SWITCH TO CONTROL LIGHT FIXTURES AT ELEVATOR PIT AND AT THE TOP OF THE ELEVATOR SHAFT.
5. COORDINATE WITH ELEVATOR CONSULTANT FOR EXACT LOCATION OF LIGHT FIXTURE AND TOGGLE CONTROL SWITCH PRIOR TO INSTALLATION.
6. LIGHT FIXTURE MOUNTED AT MIDLANDING IN STAIR B.
7. CIRCUIT WIRING BETWEEN LIGHT FIXTURE AND SWITCH IS SHOWN FOR REFERENCE AND IDENTIFICATION OF LIGHTING ZONE ONLY. REFER TO DETAIL #10 ON DRAWING E-702 FOR TYPICAL WIRING CONTROL SCHEMATIC DIAGRAM AND INTERCONNECTION BETWEEN OCCUPANCY SENSORS, SWITCHES, DAYLIGHT SENSOR AND LIGHT FIXTURES SERVING THIS AREA. 1

REVISED DRAWING
09/15/16

9/15/2016 9:19:23 PM
36x24 PLOT SHEET

NEW YORK STATE OF OPPORTUNITY. Office of General Services

DESIGN & CONSTRUCTION

CONSULTANT

STV 100 Years
225 Park Avenue South
New York, NY 10003
t 212.777.4400 f 212.529.5237
www.stvinc.com

SETTY

WARNING:
THE ALTERATION OF THIS MATERIAL IN ANY WAY, UNLESS DONE UNDER THE DIRECTION OF A COMPARABLE PROFESSIONAL, I.E. ARCHITECT FOR AN ARCHITECT, ENGINEER FOR AN ENGINEER, OR LANDSCAPE ARCHITECT FOR A LANDSCAPE ARCHITECT, IS A VIOLATION OF THE NEW YORK STATE EDUCATION LAW AND/OR REGULATIONS AND IS A CLASS 'A' MISDEMEANOR.

N

STATE OF NEW YORK · CONRAD D DELA CRUZ · 089769 · LICENSED PROFESSIONAL ENGINEER
09/15/2016

CONTRACT: ELECTRICAL

TITLE: ABATE HAZARDOUS MATERIALS & RENOVATE BUILDING 4

LOCATION: STATE OFFICE BUILDING CAMPUS
1220 WASHINGTON AVE.
ALBANY, NY 12226

CLIENT: OFFICE OF GENERAL SERVICES

KEY PLAN: A B C

MARK	DATE	DESCRIPTION
1	09/15/16	ADDENDUM No. 1
3	07/11/16	BID DOCUMENTS
2	06/10/16	FINAL COMPLIANCE
1	03/21/16	FINAL FOR REVIEW

PROJECT NUMBER:	45124 - E
DESIGNED BY:	VL/SM
DRAWN BY:	DAT
FIELD CHECK:	CD
APPROVED:	CD
SCALE:	1/8" = 1'-0"

SHEET TITLE:
ELECTRICAL FIRST FLOOR LIGHTING PLAN B

DRAWING NUMBER:
E-112

SHEET 5 OF 56

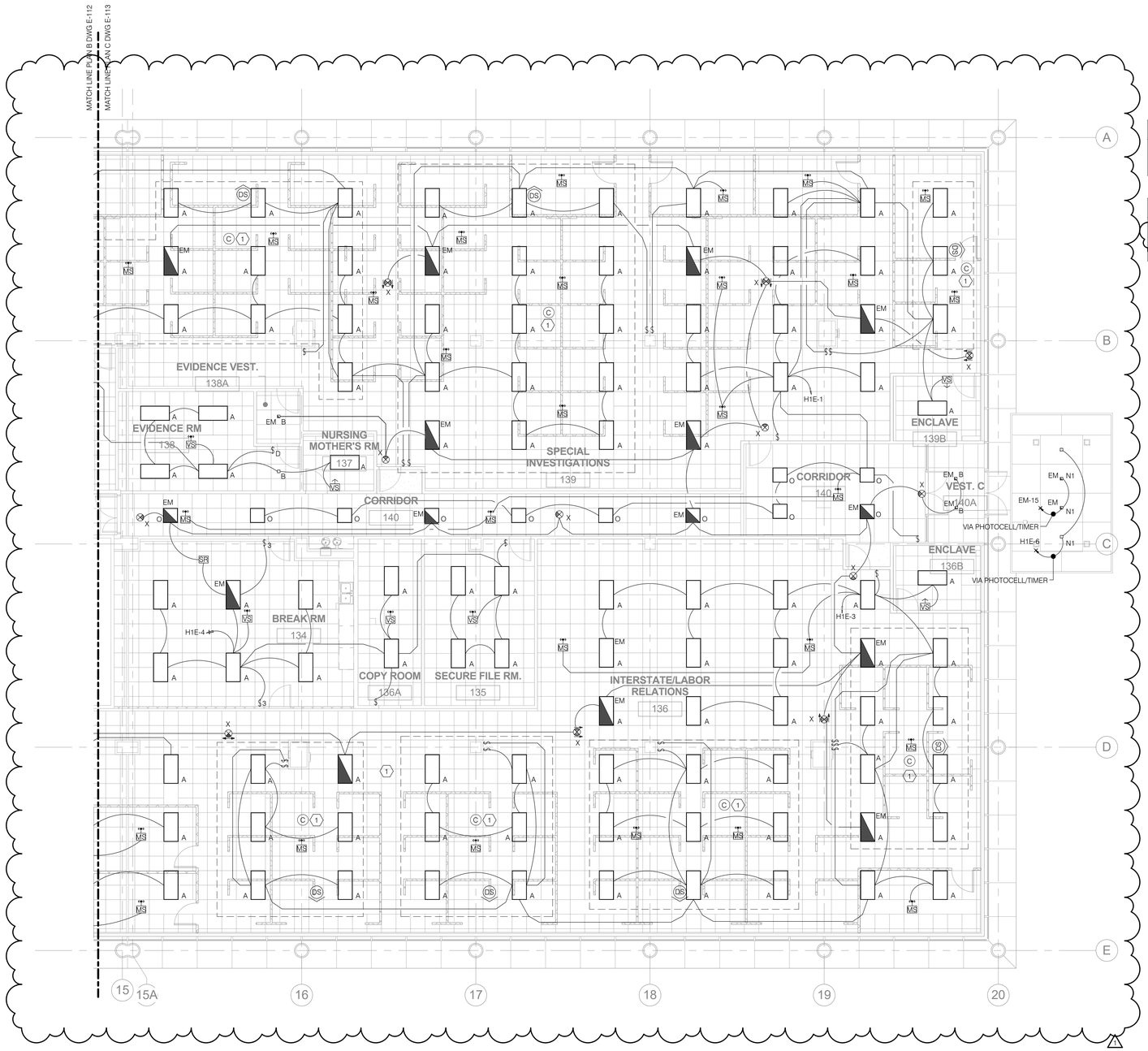

GENERAL NOTES

1. REFER TO DRAWING E-111 FOR LIGHTING GENERAL NOTES.

SHEET KEY NOTES

1. CIRCUIT WIRING BETWEEN LIGHT FIXTURE AND SWITCH IS SHOWN FOR REFERENCE AND IDENTIFICATION OF LIGHTING ZONE ONLY. REFER TO DETAIL #10 ON DRAWING E-702 FOR TYPICAL WIRING CONTROL SCHEMATIC DIAGRAM AND INTERCONNECTION BETWEEN OCCUPANCY SENSORS, SWITCHES, DAYLIGHT SENSOR AND LIGHT FIXTURES SERVING THIS AREA.

REVISED DRAWING
09/15/16

NEW YORK STATE OF OPPORTUNITY. Office of General Services

DESIGN & CONSTRUCTION

CONSULTANT

STV 100 Years

225 Park Avenue South
New York, NY 10003
t 212.777.4400 f 212.529.5237
www.stvinc.com

SETTY

WARNING:
THE ALTERATION OF THIS MATERIAL IN ANY WAY, UNLESS DONE UNDER THE DIRECTION OF A COMPARABLE PROFESSIONAL, I.E. ARCHITECT FOR AN ARCHITECT, ENGINEER FOR AN ENGINEER, OR LANDSCAPE ARCHITECT FOR A LANDSCAPE ARCHITECT, IS A VIOLATION OF THE NEW YORK STATE EDUCATION LAW AND/OR REGULATIONS AND IS A CLASS 'A' MISDEMEANOR.

N

STATE OF NEW YORK · CONRAD D DELA CRUZ · 089769 · LICENSED PROFESSIONAL ENGINEER
09/15/2016

CONTRACT: ELECTRICAL

TITLE: ABATE HAZARDOUS MATERIALS & RENOVATE BUILDING 4

LOCATION: STATE OFFICE BUILDING CAMPUS
1220 WASHINGTON AVE.
ALBANY, NY 12226

CLIENT: OFFICE OF GENERAL SERVICES

KEY PLAN: A | B | C

MARK	DATE	DESCRIPTION
4	09/15/16	ADDENDUM No. 1
3	07/11/16	BID DOCUMENTS
2	06/10/16	FINAL COMPLIANCE
1	03/21/16	FINAL FOR REVIEW

PROJECT NUMBER:	45124 - E
DESIGNED BY:	VL/SM
DRAWN BY:	DAT
FIELD CHECK:	CD
APPROVED:	CD
SCALE:	1/8" = 1'-0"

SHEET TITLE:
ELECTRICAL FIRST FLOOR LIGHTING PLAN C

DRAWING NUMBER:
E-113

SHEET 6 OF 56

9/15/2016 8:47:51 PM
36X24 PLOT SHEET

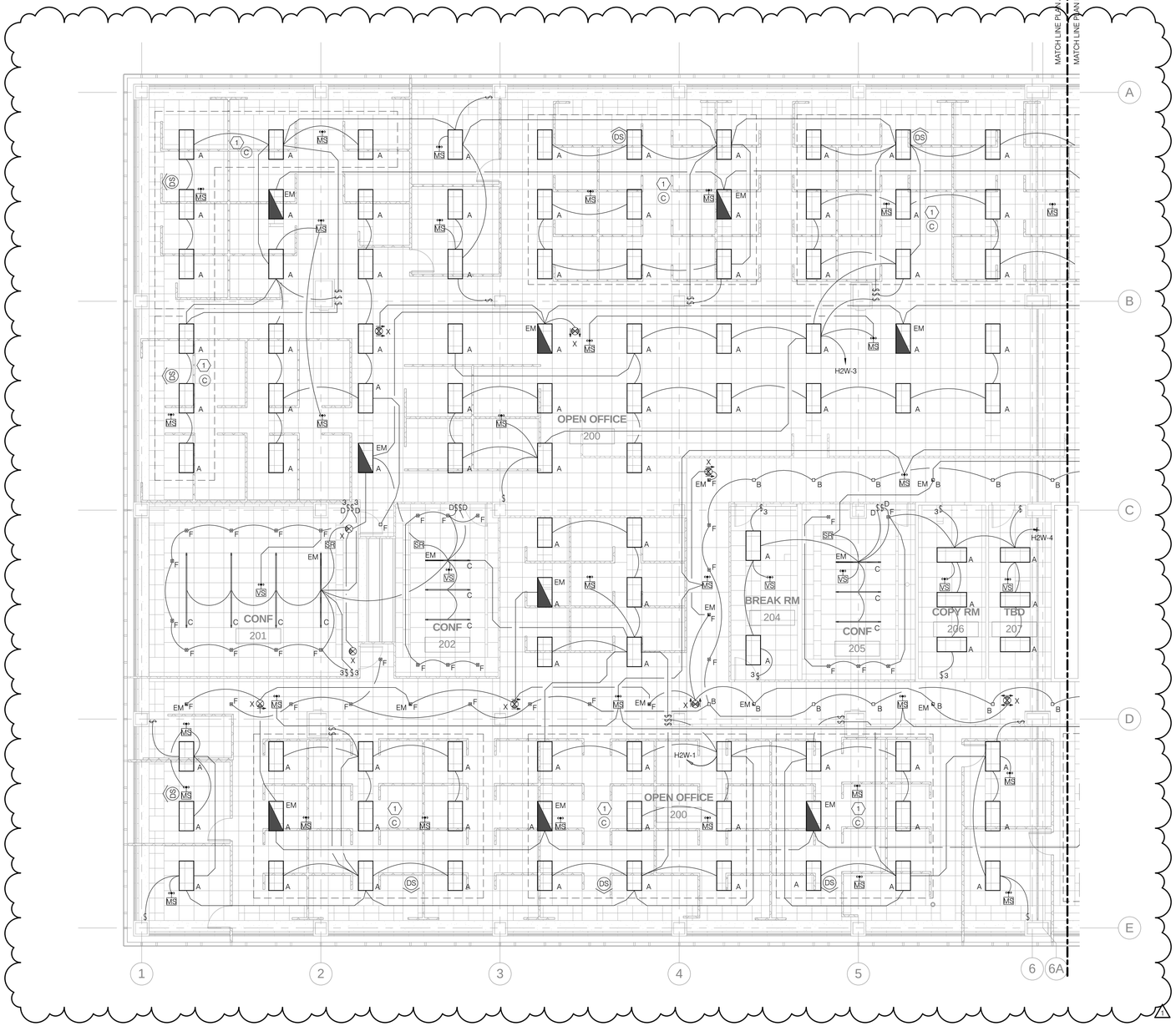

GENERAL NOTES

1. REFER TO DRAWING E-111 FOR LIGHTING GENERAL NOTES.

SHEET KEY NOTES

1. CIRCUIT WIRING BETWEEN LIGHT FIXTURE AND SWITCH IS SHOWN FOR REFERENCE AND IDENTIFICATION OF LIGHTING ZONE ONLY. REFER TO DETAIL #10 ON DRAWING E-702 FOR TYPICAL WIRING CONTROL SCHEMATIC DIAGRAM AND INTERCONNECTION BETWEEN OCCUPANCY SENSORS, SWITCHES, DAYLIGHT SENSOR AND LIGHT FIXTURES SERVING THIS AREA.

REVISED DRAWING
09/15/16

NEW YORK STATE OF OPPORTUNITY. Office of General Services

DESIGN & CONSTRUCTION

CONSULTANT

STV 100 Years

225 Park Avenue South
New York, NY 10003
t 212.777.4400 f 212.529.5237
www.stvinc.com

SETTY

WARNING:
THE ALTERATION OF THIS MATERIAL IN ANY WAY, UNLESS DONE UNDER THE DIRECTION OF A COMPARABLE PROFESSIONAL, I.E. ARCHITECT FOR AN ARCHITECT, ENGINEER FOR AN ENGINEER, OR LANDSCAPE ARCHITECT FOR A LANDSCAPE ARCHITECT, IS A VIOLATION OF THE NEW YORK STATE EDUCATION LAW AND/OR REGULATIONS AND IS A CLASS 'A' MISDEMEANOR.

N

STATE OF NEW YORK · CONRAD D DELA CRUZ · 089768 · LICENSED PROFESSIONAL ENGINEER
09/15/2016

CONTRACT:
ELECTRICAL

TITLE:
ABATE HAZARDOUS MATERIALS & RENOVATE BUILDING 4

LOCATION:
STATE OFFICE BUILDING CAMPUS
1220 WASHINGTON AVE.
ALBANY, NY 12226

CLIENT:
OFFICE OF GENERAL SERVICES

KEY PLAN:

A	B	C

MARK	DATE	DESCRIPTION
4	09/15/16	ADDENDUM No. 1
3	07/11/16	BID DOCUMENTS
2	06/10/16	FINAL COMPLIANCE
1	03/21/16	FINAL FOR REVIEW

PROJECT NUMBER:	45124 - E
DESIGNED BY:	VL/SM
DRAWN BY:	DAT
FIELD CHECK:	CD
APPROVED:	CD
SCALE:	1/8" = 1'-0"

SHEET TITLE:
ELECTRICAL SECOND FLOOR LIGHTING PLAN A

DRAWING NUMBER:
E-121

SHEET 7 OF 56

9/15/2016 2:24:42 PM
36x24 PLOT SHEET

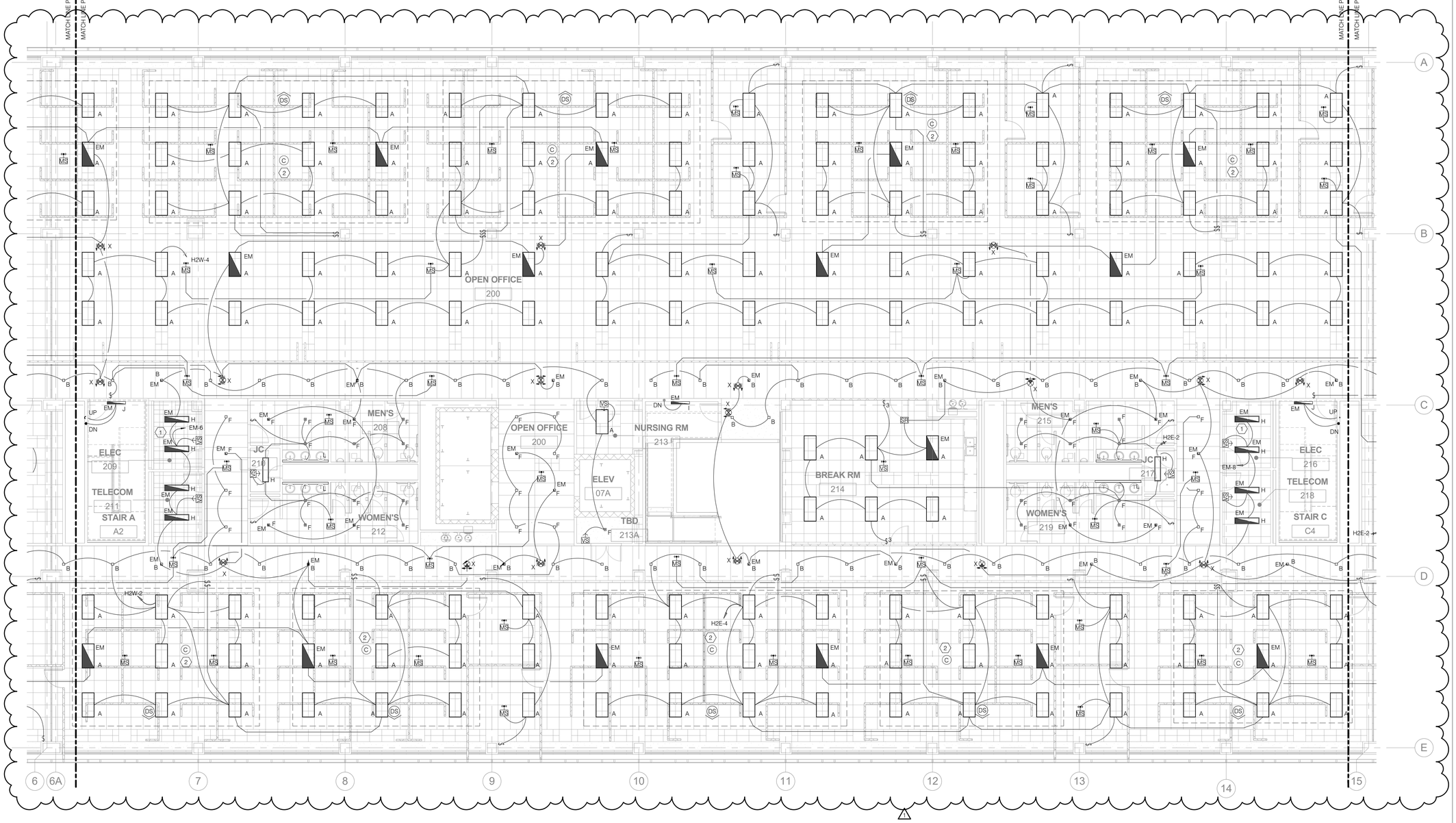

GENERAL NOTES

1. REFER TO DRAWING E-111 FOR LIGHTING GENERAL NOTES.

SHEET KEY NOTES

1. FIELD COORDINATE THE EXACT LOCATION OF ALL LIGHTING FIXTURES IN THIS ROOM WITH ALL DISCIPLINES AND CONTRACTORS TO AVOID OBSTRUCTION WITH ALL MISCELLANEOUS EQUIPMENT, PIPING, SPRINKLERS AND DUCT WORK. LIGHT FIXTURES MAY BE WALL OR CEILING MOUNTED AS NEEDED. ALL FIXTURES IN THIS ROOM ARE TO BE PROVIDED WITH WIRE-GUARD.
2. CIRCUIT WIRING BETWEEN LIGHT FIXTURE AND SWITCH IS SHOWN FOR REFERENCE AND IDENTIFICATION OF LIGHTING ZONE ONLY. REFER TO DETAIL #10 ON DRAWING E-702 FOR TYPICAL WIRING CONTROL SCHEMATIC DIAGRAM AND INTERCONNECTION BETWEEN OCCUPANCY SENSORS, SWITCHES, DAYLIGHT SENSOR AND LIGHT FIXTURES SERVING THIS AREA.

REVISED DRAWING
09/15/16

NEW YORK STATE OF OPPORTUNITY. Office of General Services

DESIGN & CONSTRUCTION

CONSULTANT

STV 100 Years

225 Park Avenue South
New York, NY 10003
t 212.777.4400 f 212.529.5237
www.stvinc.com

SETTY

WARNING:
THE ALTERATION OF THIS MATERIAL IN ANY WAY, UNLESS DONE UNDER THE DIRECTION OF A COMPARABLE PROFESSIONAL, I.E. ARCHITECT FOR AN ARCHITECT, ENGINEER FOR AN ENGINEER, OR LANDSCAPE ARCHITECT FOR A LANDSCAPE ARCHITECT, IS A VIOLATION OF THE NEW YORK STATE EDUCATION LAW AND/OR REGULATIONS AND IS A CLASS 'A' MISDEMEANOR.

N

STATE OF NEW YORK
CONRAD D DELA CRUZ
089769
LICENSED PROFESSIONAL ENGINEER
09/15/2016

CONTRACT: ELECTRICAL

TITLE: ABATE HAZARDOUS MATERIALS & RENOVATE BUILDING 4

LOCATION: STATE OFFICE BUILDING CAMPUS
1220 WASHINGTON AVE.
ALBANY, NY 12226

CLIENT: OFFICE OF GENERAL SERVICES

KEY PLAN:

A B C

MARK	DATE	DESCRIPTION
4	09/15/16	ADDENDUM No. 1
3	07/11/16	BID DOCUMENTS
2	06/10/16	FINAL COMPLIANCE
1	03/21/16	FINAL FOR REVIEW

PROJECT NUMBER:	45124 - E
DESIGNED BY:	VL/SM
DRAWN BY:	DAT
FIELD CHECK:	CD
APPROVED:	CD
SCALE:	1/8" = 1'-0"

SHEET TITLE:

ELECTRICAL SECOND FLOOR LIGHTING PLAN B

DRAWING NUMBER:

E-122

SHEET 8 OF 56

9/15/2016 9:23:54 PM
S8024 PLOT SHEET1

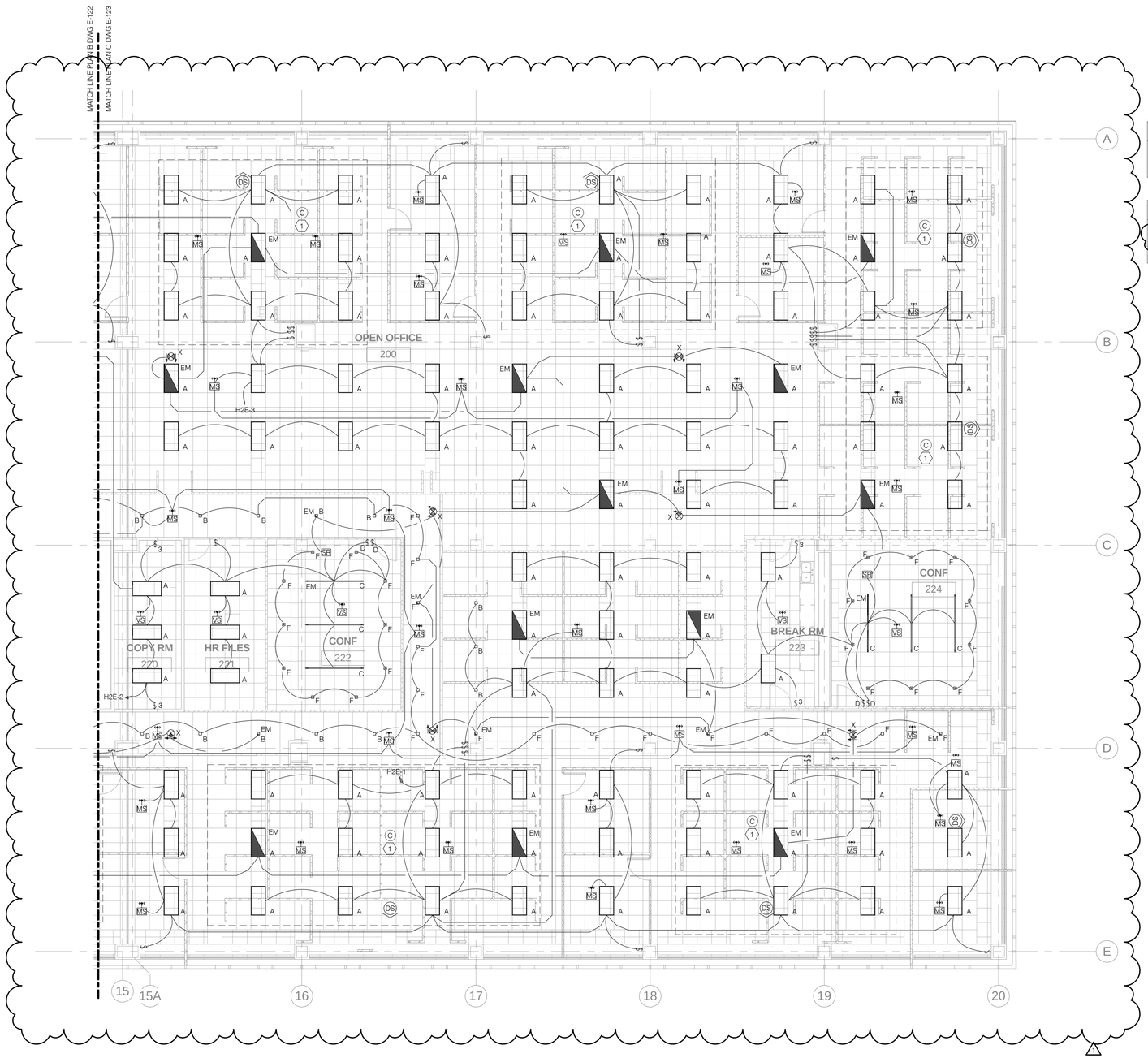

GENERAL NOTES

1. REFER TO DRAWING E-111 FOR LIGHTING GENERAL NOTES.

SHEET KEY NOTES

1. CIRCUIT WIRING BETWEEN LIGHT FIXTURE AND SWITCH IS SHOWN FOR REFERENCE AND IDENTIFICATION OF LIGHTING ZONE ONLY. REFER TO DETAIL #10 ON DRAWING E-702 FOR TYPICAL WIRING CONTROL SCHEMATIC DIAGRAM AND INTERCONNECTION BETWEEN OCCUPANCY SENSORS, SWITCHES, DAYLIGHT SENSOR AND LIGHT FIXTURES SERVING THIS AREA.

REVISED DRAWING
09/15/16

NEW YORK STATE OF OPPORTUNITY. Office of General Services

DESIGN & CONSTRUCTION

CONSULTANT

STV 100 Years

225 Park Avenue South
New York, NY 10003
t 212.777.4400 f 212.529.5237
www.stvinc.com

SETTY

WARNING:
THE ALTERATION OF THIS MATERIAL IN ANY WAY, UNLESS DONE UNDER THE DIRECTION OF A COMPARABLE PROFESSIONAL, I.E. ARCHITECT FOR AN ARCHITECT, ENGINEER FOR AN ENGINEER, OR LANDSCAPE ARCHITECT FOR A LANDSCAPE ARCHITECT, IS A VIOLATION OF THE NEW YORK STATE EDUCATION LAW AND/OR REGULATIONS AND IS A CLASS 'A' MISDEMEANOR.

N

STATE OF NEW YORK · CONRAD D DELA CRUZ · 089768 · LICENSED PROFESSIONAL ENGINEER
09/15/2016

CONTRACT:
ELECTRICAL

TITLE:
ABATE HAZARDOUS MATERIALS & RENOVATE BUILDING 4

LOCATION:
STATE OFFICE BUILDING CAMPUS
1220 WASHINGTON AVE.
ALBANY, NY 12226

CLIENT:
OFFICE OF GENERAL SERVICES

KEY PLAN:

A	B	C

MARK	DATE	DESCRIPTION
1	09/15/16	ADDENDUM No. 1
3	07/11/16	BID DOCUMENTS
2	06/10/16	FINAL COMPLIANCE
1	03/21/16	FINAL FOR REVIEW

PROJECT NUMBER:	45124 - E
DESIGNED BY:	VL/SM
DRAWN BY:	DAT
FIELD CHECK:	CD
APPROVED:	CD
SCALE:	1/8" = 1'-0"

SHEET TITLE:
ELECTRICAL
SECOND FLOOR
LIGHTING PLAN C

DRAWING NUMBER:
E-123

SHEET 9 OF 56

9/15/2016 2:24:45 PM
36624 PLOT SHEET

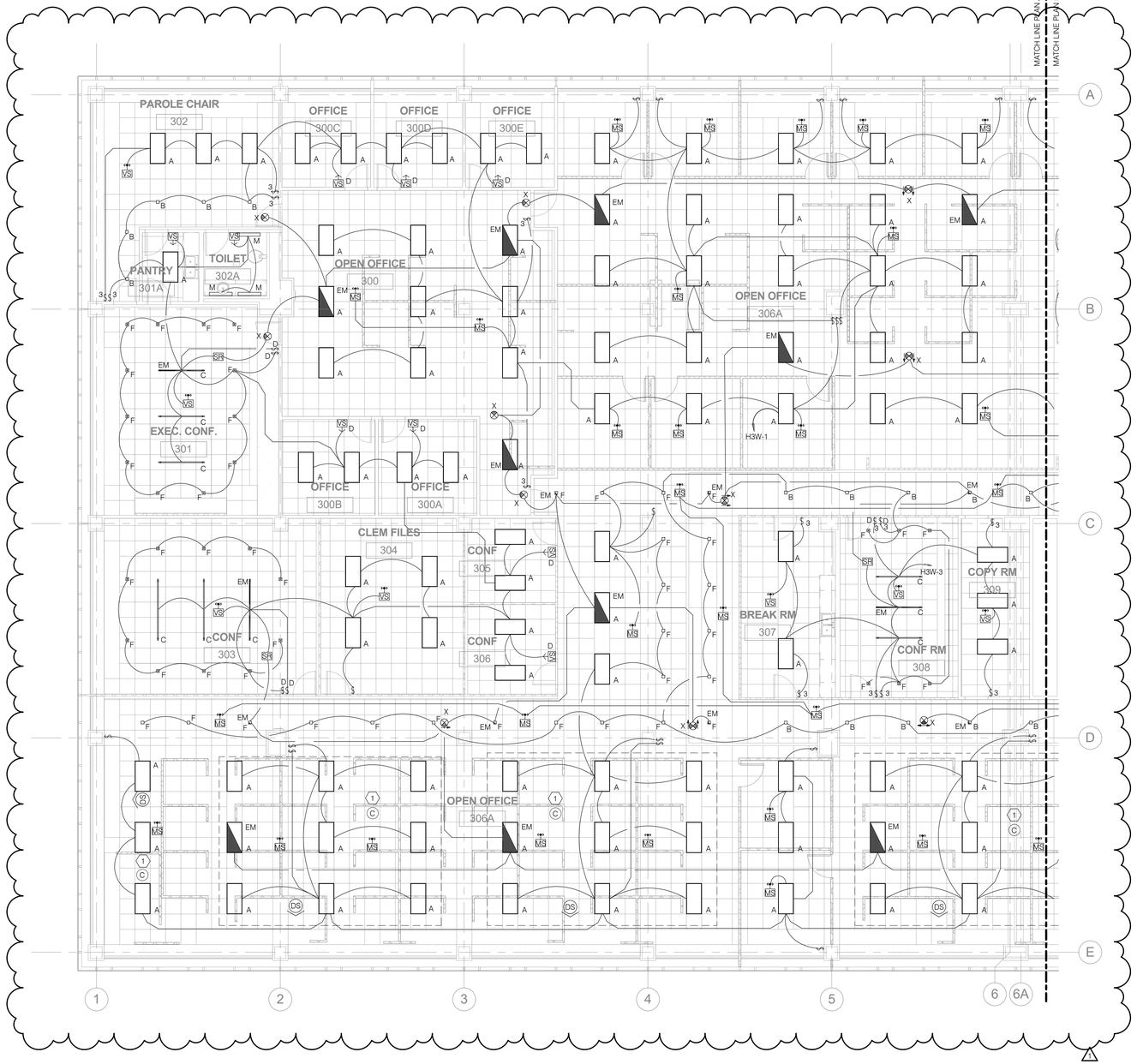

GENERAL NOTES

1. REFER TO DRAWING E-111 FOR LIGHTING GENERAL NOTES.

SHEET KEY NOTES

1. CIRCUIT WIRING BETWEEN LIGHT FIXTURE AND SWITCH IS SHOWN FOR REFERENCE AND IDENTIFICATION OF LIGHTING ZONE ONLY. REFER TO DETAIL #10 ON DRAWING E-702 FOR TYPICAL WIRING CONTROL SCHEMATIC DIAGRAM AND INTERCONNECTION BETWEEN OCCUPANCY SENSORS, SWITCHES, DAYLIGHT SENSOR AND LIGHT FIXTURES SERVING THIS AREA.

REVISED DRAWING
09/15/16

NEW YORK STATE OF OPPORTUNITY. Office of General Services

DESIGN & CONSTRUCTION

CONSULTANT

STV 100 Years

225 Park Avenue South
New York, NY 10003
t 212.777.4400 f 212.529.5237
www.stvinc.com

SETTY

WARNING:
THE ALTERATION OF THIS MATERIAL IN ANY WAY, UNLESS DONE UNDER THE DIRECTION OF A COMPARABLE PROFESSIONAL, I.E. ARCHITECT FOR AN ARCHITECT, ENGINEER FOR AN ENGINEER, OR LANDSCAPE ARCHITECT FOR A LANDSCAPE ARCHITECT, IS A VIOLATION OF THE NEW YORK STATE EDUCATION LAW AND/OR REGULATIONS AND IS A CLASS 'A' MISDEMEANOR.

N

STATE OF NEW YORK · CONRAD D DELA CRUZ · 089768 · LICENSED PROFESSIONAL ENGINEER
09/15/2016

CONTRACT: ELECTRICAL

TITLE: ABATE HAZARDOUS MATERIALS & RENOVATE BUILDING 4

LOCATION: STATE OFFICE BUILDING CAMPUS
1220 WASHINGTON AVE.
ALBANY, NY 12226

CLIENT: OFFICE OF GENERAL SERVICES

KEY PLAN: A | B | C

MARK	DATE	DESCRIPTION
4	09/15/16	ADDENDUM No. 1
3	07/11/16	BID DOCUMENTS
2	06/10/16	FINAL COMPLIANCE
1	03/21/16	FINAL FOR REVIEW

PROJECT NUMBER:	45124 - E
DESIGNED BY:	VL/SM
DRAWN BY:	DAT
FIELD CHECK:	CD
APPROVED:	CD
SCALE:	1/8" = 1'-0"

SHEET TITLE:
ELECTRICAL THIRD FLOOR LIGHTING PLAN A

DRAWING NUMBER:
E-131

SHEET 10 OF 56

9/15/2016 9:28:32 PM
38624 PLOT SHEET

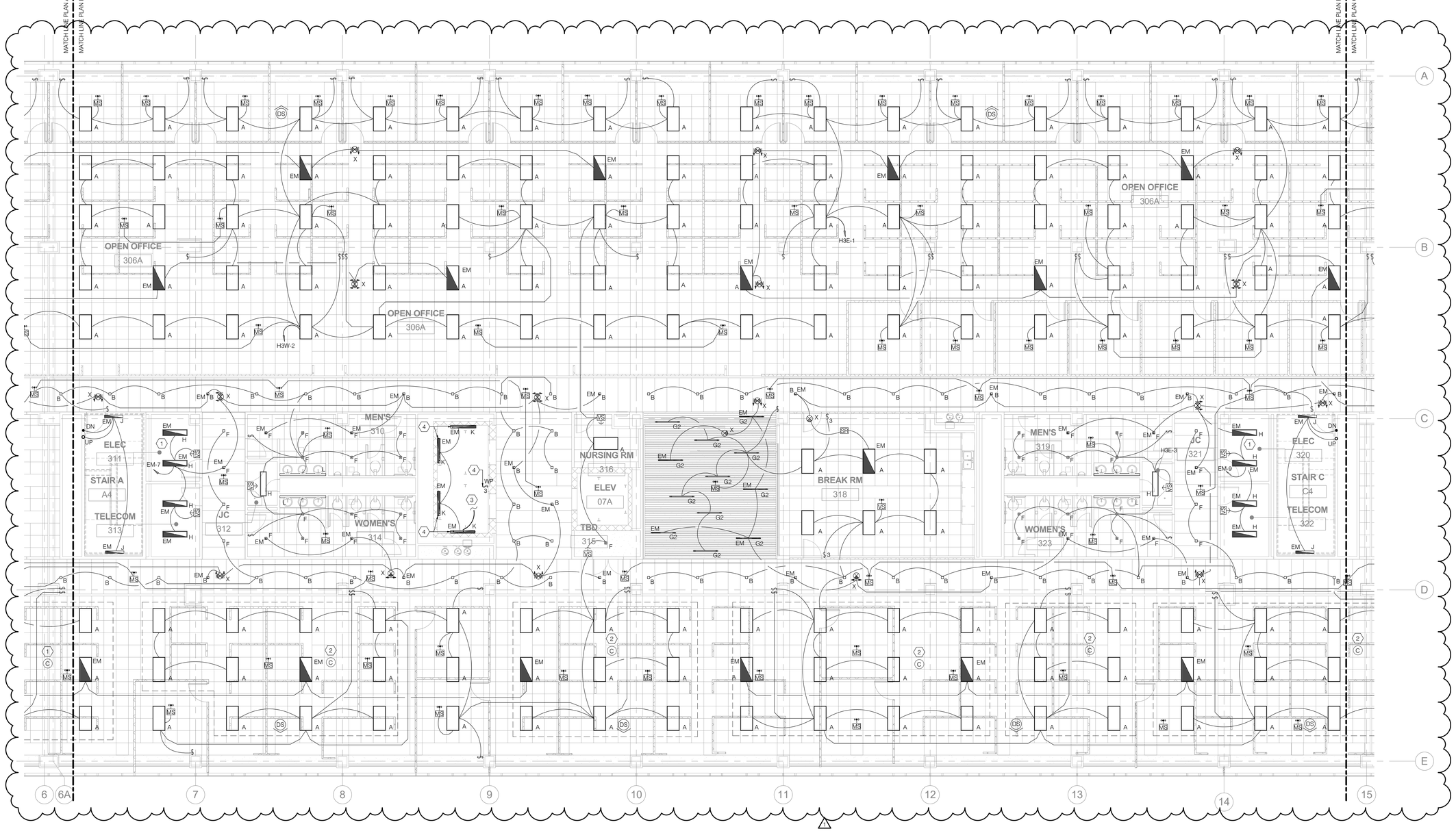

GENERAL NOTES

1. REFER TO DRAWING E-111 FOR LIGHTING GENERAL NOTES.

SHEET KEY NOTES

1. FIELD COORDINATE THE EXACT LOCATION OF ALL LIGHTING FIXTURES IN THIS ROOM WITH ALL DISCIPLINES AND CONTRACTORS TO AVOID OBSTRUCTION WITH ALL MISCELLANEOUS EQUIPMENT, PIPING, SPRINKLERS AND DUCT WORK. LIGHT FIXTURES MAY BE WALL OR CEILING MOUNTED AS NEEDED. ALL FIXTURES IN THIS ROOM ARE TO BE PROVIDED WITH WIRE-GUARD.
2. CIRCUIT WIRING BETWEEN LIGHT FIXTURE AND SWITCH IS SHOWN FOR REFERENCE AND IDENTIFICATION OF LIGHTING ZONE ONLY. REFER TO DETAIL #10 ON DRAWING E-702 FOR TYPICAL WIRING CONTROL SCHEMATIC DIAGRAM AND INTERCONNECTION BETWEEN OCCUPANCY SENSORS, SWITCHES, DAYLIGHT SENSOR AND LIGHT FIXTURES SERVING THIS AREA. 1
3. CONNECT TYPE K FIXTURES ON THE ELEVATOR SHAFT TO THE FIXTURES IN PIT. PROVIDE THREE WAY SWITCH TO CONTROL LIGHT FIXTURES AT ELEVATOR PIT AND AT THE TOP OF THE ELEVATOR SHAFT.
4. COORDINATE WITH ELEVATOR CONSULTANT FOR EXACT LOCATION OF LIGHT FIXTURE AND TOGGLE CONTROL SWITCH PRIOR TO INSTALLATION.

REVISED DRAWING
09/15/16

NEW YORK STATE OF OPPORTUNITY. Office of General Services

DESIGN & CONSTRUCTION

CONSULTANT

STV 100 Years

225 Park Avenue South
New York, NY 10003
t 212.777.4400 f 212.529.5237
www.stvinc.com

SETTY

WARNING:
THE ALTERATION OF THIS MATERIAL IN ANY WAY, UNLESS DONE UNDER THE DIRECTION OF A COMPARABLE PROFESSIONAL, I.E. ARCHITECT FOR AN ARCHITECT, ENGINEER FOR AN ENGINEER, OR LANDSCAPE ARCHITECT FOR A LANDSCAPE ARCHITECT, IS A VIOLATION OF THE NEW YORK STATE EDUCATION LAW AND/OR REGULATIONS AND IS A CLASS 'A' MISDEMEANOR.

N

STATE OF NEW YORK · CONRAD D DELA CRUZ · 089769 · LICENSED PROFESSIONAL ENGINEER
09/15/2016

CONTRACT: ELECTRICAL

TITLE: ABATE HAZARDOUS MATERIALS & RENOVATE BUILDING 4

LOCATION: STATE OFFICE BUILDING CAMPUS
1220 WASHINGTON AVE.
ALBANY, NY 12226

CLIENT: OFFICE OF GENERAL SERVICES

KEY PLAN:

A B C

MARK	DATE	DESCRIPTION
1	09/15/16	ADDENDUM No. 1
3	07/11/16	BID DOCUMENTS
2	06/10/16	FINAL COMPLIANCE
1	03/21/16	FINAL FOR REVIEW

PROJECT NUMBER:	45124 - E
DESIGNED BY:	VL/SM
DRAWN BY:	DAT
FIELD CHECK:	CD
APPROVED:	CD
SCALE:	1/8" = 1'-0"

SHEET TITLE:
ELECTRICAL THIRD FLOOR LIGHTING PLAN B

DRAWING NUMBER:
E-132

SHEET 11 OF 56

9/15/2016 9:09:55 PM
38624 PLOT SHEET

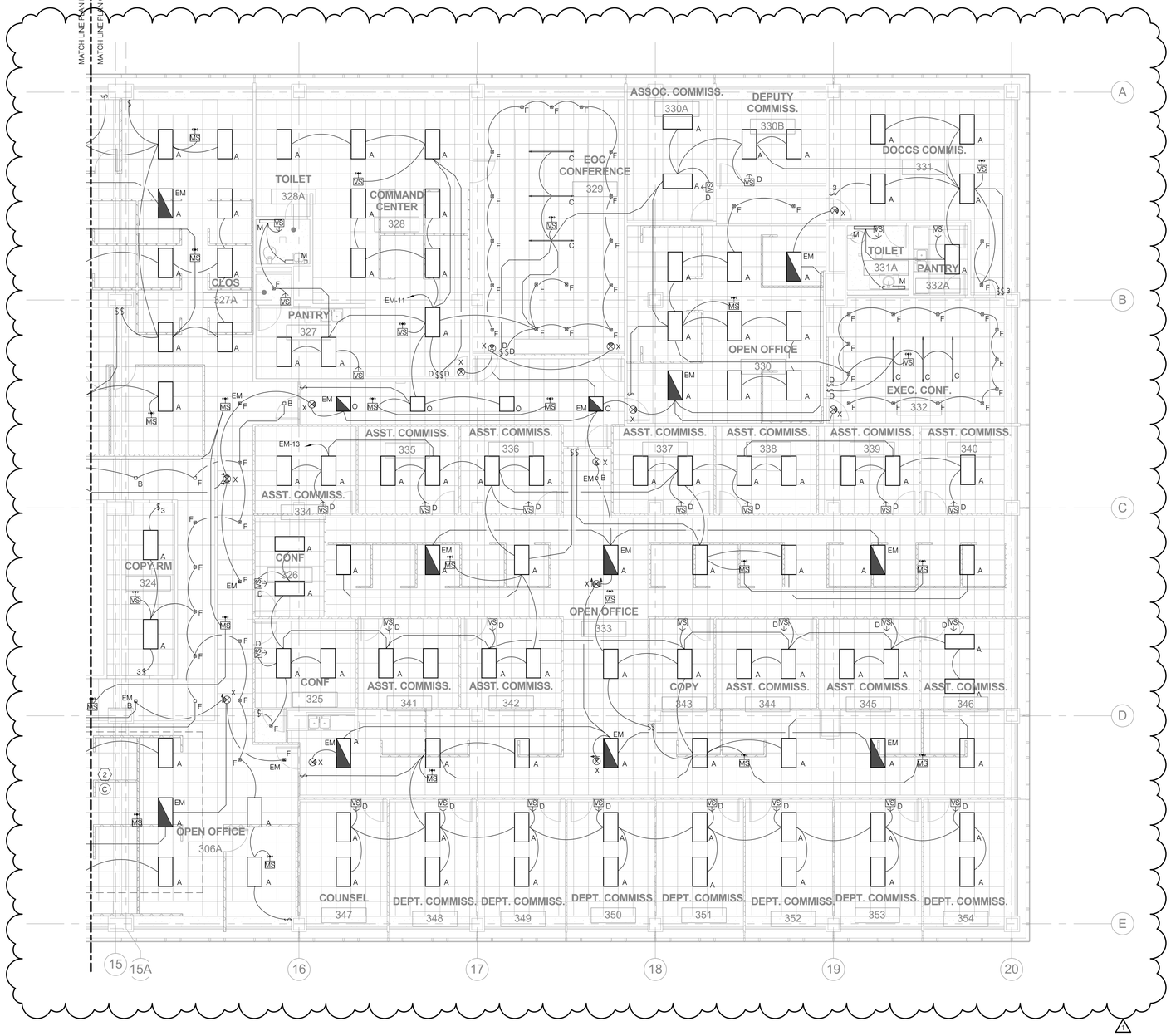

GENERAL NOTES

1. REFER TO DRAWING E-111 FOR LIGHTING GENERAL NOTES.

REVISED DRAWING
09/15/16

NEW YORK STATE OF OPPORTUNITY. Office of General Services

DESIGN & CONSTRUCTION

CONSULTANT

STV 100 Years

225 Park Avenue South
New York, NY 10003
t 212.777.4400 f 212.529.5237
www.stvinc.com

SETTY

WARNING:
THE ALTERATION OF THIS MATERIAL IN ANY WAY, UNLESS DONE UNDER THE DIRECTION OF A COMPARABLE PROFESSIONAL, I.E. ARCHITECT FOR AN ARCHITECT, ENGINEER FOR AN ENGINEER, OR LANDSCAPE ARCHITECT FOR A LANDSCAPE ARCHITECT, IS A VIOLATION OF THE NEW YORK STATE EDUCATION LAW AND/OR REGULATIONS AND IS A CLASS 'A' MISDEMEANOR.

N

STATE OF NEW YORK · CONRAD D DELA CRUZ · 089768 · LICENSED PROFESSIONAL ENGINEER
09/15/2016

CONTRACT:
ELECTRICAL

TITLE:
ABATE HAZARDOUS MATERIALS & RENOVATE BUILDING 4

LOCATION:
STATE OFFICE BUILDING CAMPUS
1220 WASHINGTON AVE.
ALBANY, NY 12226

CLIENT:
OFFICE OF GENERAL SERVICES

KEY PLAN:

A	B	C

MARK	DATE	DESCRIPTION
4	09/15/16	ADDENDUM No. 1
3	07/11/16	BID DOCUMENTS
2	06/10/16	FINAL COMPLIANCE
1	03/21/16	FINAL FOR REVIEW

PROJECT NUMBER:	45124 - E
DESIGNED BY:	VL/SM
DRAWN BY:	DAT
FIELD CHECK:	CD
APPROVED:	CD
SCALE:	1/8" = 1'-0"

SHEET TITLE:
ELECTRICAL THIRD FLOOR LIGHTING PLAN C

DRAWING NUMBER:
E-133

SHEET 12 OF 56

9/15/2016 8:48:55 PM
36X24 PLOT SHEET

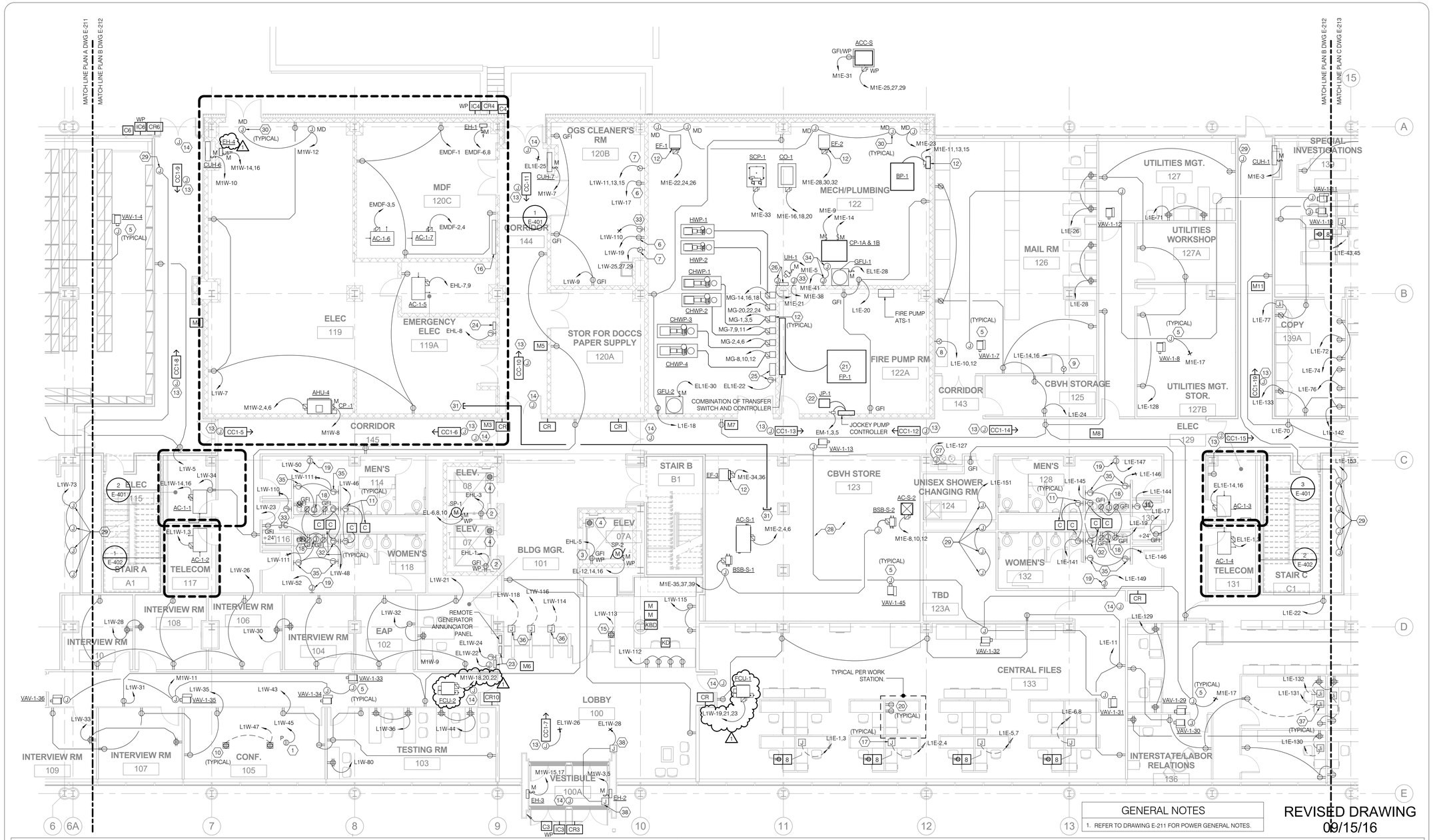

GENERAL NOTES

1. REFER TO DRAWING E-211 FOR POWER GENERAL NOTES.

REVISED DRAWING
09/15/16

SHEET KEY NOTES

1. CEILING MOUNTED RECEPTACLE FOR PROJECTOR. COORDINATE WITH ARCHITECT FOR EXACT LOCATION AND MOUNTING REQUIREMENTS PRIOR TO INSTALLATION.
2. COORDINATE WITH ELEVATOR CONSULTANT FOR EXACT OUTLET LOCATION IN PIT PRIOR TO INSTALLATION. CONNECT TO GFI RECEPTACLE AT TOP OF ELEVATOR SHAFT. SEE DRAWING E-232 FOR RECEPTACLE LOCATION AND CIRCUIT CONTINUATION.
3. COORDINATE WITH ELEVATOR CONSULTANT FOR EXACT OUTLET LOCATION IN PIT PRIOR TO INSTALLATION. CONNECT TO GFI RECEPTACLE AT TOP OF ELEVATOR SHAFT. SEE DRAWING E-242 FOR RECEPTACLE LOCATION AND CIRCUIT CONTINUATION.
4. ELEVATOR EMERGENCY STOP SWITCH. SEE DETAIL 6 ON DRAWING E-701.
5. JUNCTION BOX FOR VAV CONTROLS. COORDINATE WITH MECHANICAL CONTRACTOR FOR EXACT LOCATION, SPECIFICATION AND CONNECTION REQUIREMENTS AS REQUIRED.
6. PROVIDE 5-20R DUPLEX RECEPTACLE FOR CLOTHES WASHER. COORDINATE WITH ARCHITECT/EQUIPMENT VENDOR FOR EXACT LOCATION, MOUNTING AND NEMA CONFIGURATION REQUIREMENTS PRIOR TO INSTALLATION.
7. NEMA 14-30R RECEPTACLE FOR ELECTRICAL DRYER. RUN 3 #10 + 1 # 10 AWG G IN 3/4"C TO PANEL INDICATED. COORDINATE WITH ARCHITECT/EQUIPMENT VENDOR FOR EXACT LOCATION, MOUNTING AND NEMA CONFIGURATION REQUIREMENTS PRIOR TO INSTALLATION.
8. PROVIDE 6-20R DUPLEX RECEPTACLE FOR XRAY MACHINE. COORDINATE WITH ARCHITECT/EQUIPMENT VENDOR FOR EXACT LOCATION, MOUNTING AND NEMA CONFIGURATION REQUIREMENTS PRIOR TO INSTALLATION.
9. PROVIDE 6-20R DUPLEX RECEPTACLE FOR POSTAGE MACHINE. COORDINATE WITH ARCHITECT/EQUIPMENT VENDOR FOR EXACT LOCATION, MOUNTING AND NEMA CONFIGURATION REQUIREMENTS PRIOR TO INSTALLATION.
10. FLUSH FLOOR MOUNTED OUTLET. WIRING/CONDUIT SHALL BE CONCEALED IN THE FLOOR SLAB BELOW. BASIS OF DESIGN "WALKERFLEX SYSTEM".
11. JUNCTION BOX AND CONVERTER FOR SENSOR ACTIVATED FLUSHOMETER. IN ADDITION, EACH FLUSH VALVE REQUIRES AN INDIVIDUAL JUNCTION BOX FOR THE SENSOR. THE WIRING BETWEEN CONVERTER AND FLUSH VALVES SHALL BE PROVIDED BY THE ELECTRICAL CONTRACTOR. COORDINATE WITH PLUMBING CONTRACTOR FOR EXACT SPECIFICATIONS, LOCATION, MOUNTING HEIGHT AND ALL CONNECTION REQUIREMENTS PRIOR TO INSTALLATION.
12. MECHANICAL CONTRACTOR TO FURNISH AND INSTALL VFD CONTROLLER. COORDINATE WITH MECHANICAL CONTRACTOR FOR EXACT LOCATION AND ADDITIONAL REQUIREMENTS, PRIOR TO INSTALLATION. GROUND AS REQUIRED IN THE SPECS.
13. JUNCTION BOX FOR SECURITY CAMERA. PROVIDE 3/4" CONDUIT WITH REQUIRED WIRING FROM THE CAMERA AND TERMINATE AT MDF, ROOM 120C ON FIRST FLOOR. VERIFY ALL REQUIREMENT WITH SECURITY SYSTEM SUPPLIER BEFORE INSTALLING ANY RACEWAY FOR CAMERA. SEE DRAWING E-802 FOR ADDITIONAL REQUIREMENTS. CONNECT ALL CAMERAS ON THE SAME CIRCUIT.
14. JUNCTION BOX FOR SECURITY CARD READER. PROVIDE 3/4" CONDUIT WITH REQUIRED WIRING FROM THE CARD READER AND TERMINATE AT MDF, ROOM 120C ON FIRST FLOOR. SEE DRAWING E-801 FOR ADDITIONAL REQUIREMENTS. VERIFY ALL REQUIREMENT WITH SECURITY SYSTEM SUPPLIER BEFORE INSTALLING ANY RACEWAY FOR CARD READER. CONNECT ALL CARD READERS ON THE SAME CIRCUIT.
15. FLUSH FLOOR MOUNTED RECEPTACLE FOR METAL DETECTOR. COORDINATE WITH ARCHITECT AND EQUIPMENT VENDOR FOR EXACT LOCATION AND CONNECTION REQUIREMENTS PRIOR TO INSTALLATION. WIRING/CONDUIT SHALL BE CONCEALED IN THE FLOOR SLAB BELOW. BASIS OF DESIGN "WALKERFLEX SYSTEM".
16. ALL SECURITY DEVICE CONDUIT TERMINATIONS MUST BE COORDINATED WITH THE SECURITY VENDOR, IT ROOM/RACK LAYOUT AND DIRECTOR PRIOR TO INSTALLATION.
17. PROVIDE JUNCTION BOX POWER FEED FOR WORKSTATIONS AND CONNECT IT TO THE SYSTEM FURNITURE WHIP. BASIS OF DESIGN "WALKERFLEX SYSTEM".
18. JUNCTION BOX FOR AUTOMATED SOAP DISPENSER. COORDINATE WITH ARCHITECT AND EQUIPMENT VENDOR FOR EXACT LOCATION, MOUNTING HEIGHT. WIRE AND CONNECT AS REQUIRED.
19. JUNCTION BOX FOR HAND DRYER. COORDINATE WITH ARCHITECT AND EQUIPMENT VENDOR FOR EXACT LOCATION, MOUNTING HEIGHT. WIRE AND CONNECT AS REQUIRED.
20. SURFACE MOUNTED DUPLEX RECEPTACLES TO BE PROVIDED WITH SYSTEM FURNITURE WORKSTATIONS.
21. FIRE PUMP. REFER TO POWER RISER DIAGRAM ON DRAWING E-501 FOR POWER CONNECTION. INSTALL PER MANUFACTURER'S REQUIREMENTS AND RECOMMENDATIONS. FIRE PUMP COMBINATION ATS/CONTROLLER FURNISHED AND INSTALLED BY THE PLUMBING CONTRACTOR AND WIRED BY ELECTRICAL CONTRACTOR.
22. JOCKEY PUMP. COORDINATE WITH FIRE PROTECTION CONTRACTOR FOR EXACT LOCATION. INSTALL PER MANUFACTURER'S REQUIREMENTS AND RECOMMENDATIONS. JOCKEY PUMP CONTROLLER FURNISHED AND INSTALLED BY THE PLUMBING CONTRACTOR AND WIRED BY ELECTRICAL CONTRACTOR.
23. PROVIDE CONTROL PANEL FOR SUMP PUMP SP-1 AND SP-2. COORDINATE WITH PLUMBING CONTRACTOR AND EQUIPMENT VENDOR FOR EXACT LOCATION, SPECIFICATIONS AND ALL CONNECTION REQUIREMENTS PRIOR TO INSTALLATION.
24. PROVIDE REMOTE MONITORING PANEL FOR PLC CONTROLS. COORDINATE WITH EQUIPMENT VENDOR FOR EXACT LOCATION AND ALL CONNECTION REQUIREMENTS PRIOR TO INSTALLATION.
25. PROVIDE JUNCTION BOX FOR BMS CONTROL PANEL. COORDINATE WITH MECHANICAL CONTRACTOR AND EQUIPMENT VENDOR FOR EXACT LOCATION, SPECIFICATIONS AND ALL CONNECTION REQUIREMENTS PRIOR TO INSTALLATION.
26. PROVIDE JUNCTION BOX FOR PRV STATION CONTROL PANEL. COORDINATE WITH MECHANICAL CONTRACTOR AND EQUIPMENT VENDOR FOR EXACT LOCATION, SPECIFICATIONS AND ALL CONNECTION REQUIREMENTS PRIOR TO INSTALLATION.
27. JUNCTION BOX FOR ELECTRIC WATER COOLER. COORDINATE WITH ARCHITECT, PLUMBING CONTRACTOR AND MANUFACTURER FOR EXACT LOCATION, SPECIFICATION AND CONNECTION REQUIREMENTS.
28. REFER TO CBVH DESIGN PACKAGE DRAWINGS FOR POWER WORK IN THIS ROOM.
29. JUNCTION BOX FOR POWER CONNECTION TO MOTORIZED SMOKE DAMPER AND SHALL BE INTERLOCKED WITH SMOKE DETECTOR. REFER TO DRAWING E-312 FOR FIRE ALARM SMOKE DETECTOR LOCATION. COORDINATE WITH MECHANICAL CONTRACTOR FOR EXACT MOTORIZED SMOKE DAMPER LOCATION PRIOR TO MAKE ALL POWER AND FIRE ALARM CONNECTION.
30. JUNCTION BOX FOR MOTORIZED DAMPER. COORDINATE WITH MECHANICAL CONTRACTOR FOR EXACT LOCATION OF MOTORIZED DAMPER PRIOR TO INSTALLATION.
31. PROVIDE 2 1/2" EMPTY CONDUIT WITH PULL STRINGS FROM MAIN ELECTRICAL ROOM 119 TO CBVH STORE123 AND TERMINATE AT CBVH STORE. COORDINATE WITH CBVH CONTRACTOR FOR TERMINATION.
32. JUNCTION BOX AND CONVERTER FOR AUTOMATIC FAUCETS. THE WIRING BETWEEN CONVERTER AND FAUCETS SHALL BE PROVIDED BY THE ELECTRICAL CONTRACTOR. COORDINATE WITH PLUMBING CONTRACTOR FOR EXACT SPECIFICATIONS, LOCATION, MOUNTING HEIGHT AND ALL CONNECTION REQUIREMENTS PRIOR TO INSTALLATION.
33. JUNCTION BOX FOR TRAP PRIMERS. COORDINATE WITH PLUMBING CONTRACTOR AND MANUFACTURER FOR EXACT LOCATION, MOUNTING HEIGHT, SPECIFICATION AND CONNECTION REQUIREMENTS PRIOR TO INSTALLATION.
34. JUNCTION BOX FOR MOTORIZED VALVE AND TEMPERATURE MONITORING CONTROL PANEL FOR WATER HEATER . COORDINATE WITH PLUMBING CONTRACTOR AND MANUFACTURER FOR EXACT LOCATION, SPECIFICATION AND CONNECTION REQUIREMENTS PRIOR TO INSTALLATION.
35. JUNCTION BOX FOR AUTOMATED HAND TOWEL DISPENSER. COORDINATE WITH ARCHITECT AND EQUIPMENT VENDOR FOR EXACT LOCATION, MOUNTING HEIGHT. WIRE AND CONNECT AS REQUIRED.
36. PROVIDE FLUSH FLOOR MOUNTED JUNCTION BOX FOR TURNSTILES. COORDINATE WITH ARCHITECT AND EQUIPMENT VENDOR FOR EXACT LOCATION AND CONNECTION REQUIREMENTS PRIOR TO INSTALLATION. WIRING/CONDUIT SHALL BE CONCEALED IN THE FLOOR SLAB BELOW. BASIS OF DESIGN "WALKERFLEX SYSTEM".
37. PROVIDE JUNCTION BOX POWER FEED FOR RECEPTACLES ON FULL HEIGHT DEMOUNTABLE PARTITIONS AND 7 HIGH SYSTEM FURNITURE PARTITIONS. RECEPTACLE MUST BE PREFABRICATED WITH THE PARTITION WALLS AND ALSO COME WITH FLEXIBLE RACEWAY SYSTEM FOR INTERCONNECTIONS. ELECTRICAL CONTRACTOR SHALL DO THE FINAL CONNECTION FROM JUNCTION BOX/RECEPTACLE UP TO THE PANELBOARD.
38. FLUSH FLOOR MOUNTED JUNCTION BOX FOR RECESSED DOOR OPERATORS. WIRING/CONDUIT SHALL BE CONCEALED IN THE FLOOR SLAB BELOW. COORDINATE WITH ARCHITECT AND SECURITYSYSTEM SUPPLIER FOR EXACT LOCATION AND CONNECTION REQUIREMENTS. BASIS OF DESIGN "WALKERFLEX SYSTEM".

NEW YORK STATE OF OPPORTUNITY. Office of General Services

DESIGN & CONSTRUCTION

CONSULTANT

STV 100 Years

225 Park Avenue South
New York, NY 10003
t 212.777.4400 f 212.529.5237
www.stvinc.com

SETTY

WARNING:
THE ALTERATION OF THIS MATERIAL IN ANY WAY, UNLESS DONE UNDER THE DIRECTION OF A COMPARABLE PROFESSIONAL, I.E. ARCHITECT FOR AN ARCHITECT, ENGINEER FOR AN ENGINEER, OR LANDSCAPE ARCHITECT FOR A LANDSCAPE ARCHITECT, IS A VIOLATION OF THE NEW YORK STATE EDUCATION LAW AND/OR REGULATIONS AND IS A CLASS 'A' MISDEMEANOR.

N

STATE OF NEW YORK · CONRAD D DELA CRUZ · 089760 · LICENSED PROFESSIONAL ENGINEER
09/15/2016

CONTRACT: ELECTRICAL

TITLE: ABATE HAZARDOUS MATERIALS & RENOVATE BUILDING 4

LOCATION: STATE OFFICE BUILDING CAMPUS
1220 WASHINGTON AVE.
ALBANY, NY 12226

CLIENT: OFFICE OF GENERAL SERVICES

KEY PLAN: A B C

MARK	DATE	DESCRIPTION
3	09/15/16	ADDENDUM No. 1
2	07/11/16	BID DOCUMENTS
1	06/10/16	FINAL COMPLIANCE
	03/21/16	FINAL FOR REVIEW

PROJECT NUMBER:	45124 - E
DESIGNED BY:	VL/SM
DRAWN BY:	DAT
FIELD CHECK:	CD
APPROVED:	CD
SCALE:	1/8" = 1'-0"

SHEET TITLE:
ELECTRICAL FIRST FLOOR POWER PLAN B

DRAWING NUMBER:
E-212

SHEET 15 OF 56

9/15/2016 8:49:08 PM
36X24 PLOT SHEET

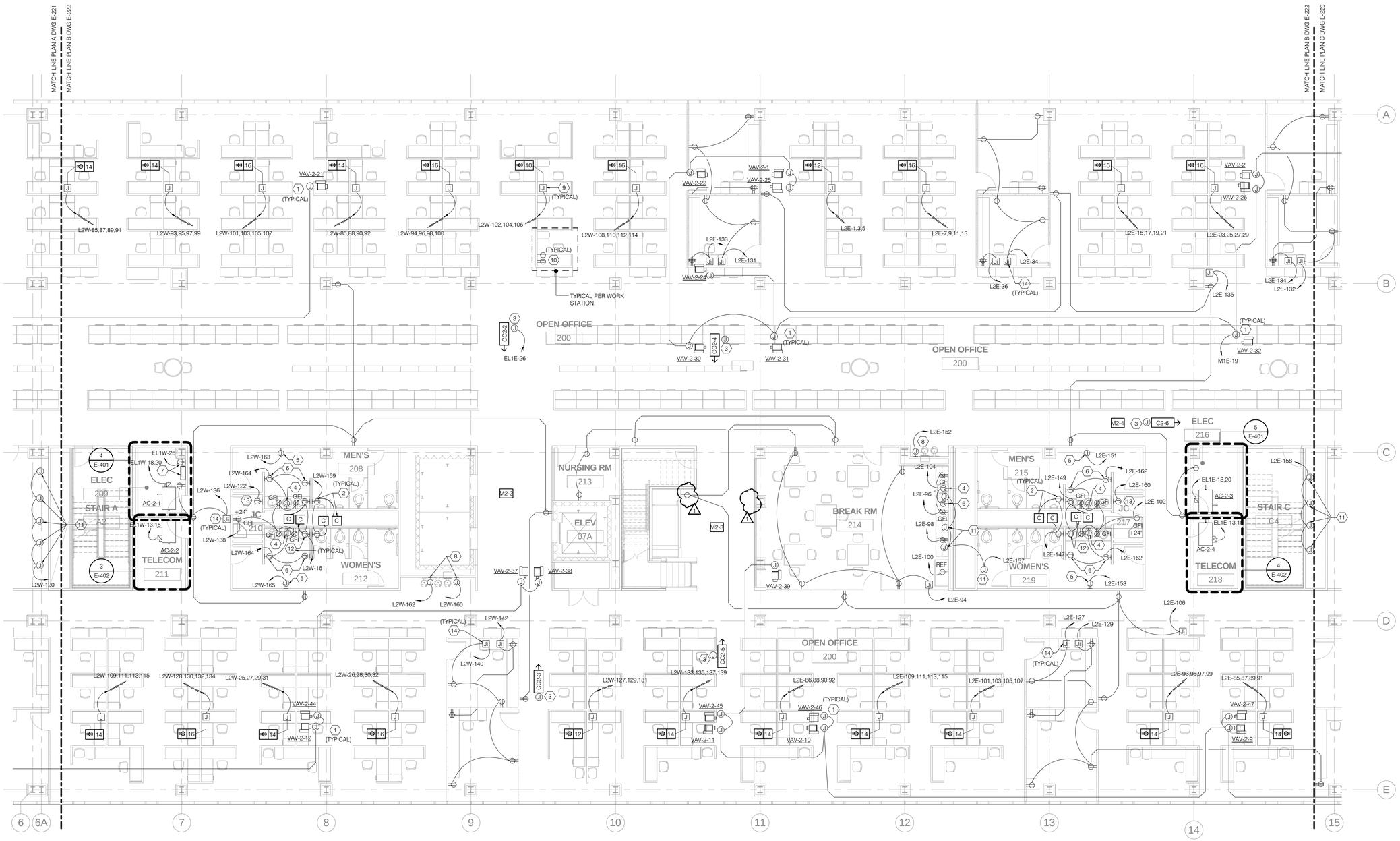

GENERAL NOTES

1. REFER TO DRAWING E-211 FOR POWER GENERAL NOTES.

SHEET KEY NOTES

1. JUNCTION BOX FOR VAV CONTROLS. COORDINATE WITH MECHANICAL CONTRACTOR FOR EXACT LOCATION, SPECIFICATION AND CONNECTION REQUIREMENTS AS REQUIRED.
2. JUNCTION BOX AND CONVERTER FOR SENSOR ACTIVATED FLUSHOMETER. IN ADDITION, EACH FLUSH VALVE REQUIRES AN INDIVIDUAL JUNCTION BOX FOR THE SENSOR. THE WIRING BETWEEN CONVERTER AND FLUSH VALVES SHALL BE PROVIDED BY THE ELECTRICAL CONTRACTOR. COORDINATE WITH PLUMBING CONTRACTOR FOR EXACT SPECIFICATIONS, LOCATION, MOUNTING HEIGHT AND ALL CONNECTION REQUIREMENTS PRIOR TO INSTALLATION.
3. JUNCTION BOX FOR SECURITY CAMERA. PROVIDE 3/4" CONDUIT WITH REQUIRED WIRING FROM THE CAMERA AND TERMINATE AT MDF, ROOM 120C ON FIRST FLOOR. VERIFY ALL REQUIREMENT WITH SECURITY SYSTEM SUPPLIER BEFORE INSTALLING ANY RACEWAY FOR CAMERA. SEE DRAWING E-802 FOR ADDITIONAL REQUIREMENTS. CONNECT ALL CAMERAS ON THE SAME CIRCUIT.
4. JUNCTION BOX FOR AUTOMATED SOAP DISPENSER. COORDINATE WITH ARCHITECT AND EQUIPMENT VENDOR FOR EXACT LOCATION, MOUNTING HEIGHT. WIRE AND CONNECT AS REQUIRED.
5. JUNCTION BOX FOR HAND DRYER. COORDINATE WITH ARCHITECT AND EQUIPMENT VENDOR FOR EXACT LOCATION, MOUNTING HEIGHT. WIRE AND CONNECT AS REQUIRED.
6. JUNCTION BOX FOR AUTOMATED HAND TOWEL DISPENSER. COORDINATE WITH ARCHITECT AND EQUIPMENT VENDOR FOR EXACT LOCATION, MOUNTING HEIGHT. WIRE AND CONNECT AS REQUIRED.
7. PROVIDE JUNCTION BOX FOR BMS CONTROL PANEL. COORDINATE WITH MECHANICAL CONTRACTOR AND EQUIPMENT VENDOR FOR EXACT LOCATION, SPECIFICATIONS AND ALL CONNECTION REQUIREMENTS PRIOR TO INSTALLATION.
8. JUNCTION BOX FOR ELECTRIC WATER COOLER. COORDINATE WITH ARCHITECT, PLUMBING CONTRACTOR AND MANUFACTURER FOR EXACT LOCATION, SPECIFICATION AND CONNECTION REQUIREMENTS.
9. PROVIDE JUNCTION BOX POWER FEED FOR WORKSTATIONS AND CONNECT IT TO THE SYSTEM FURNITURE WHIP. BASIS OF DESIGN "WALKERFLEX SYSTEM".
10. SURFACE MOUNTED DUPLEX RECEPTACLES TO BE PROVIDED WITH SYSTEM FURNITURE WORKSTATIONS.
11. JUNCTION BOX FOR POWER CONNECTION TO MOTORIZED SMOKE DAMPER AND SHALL BE INTERLOCKED WITH SMOKE DETECTOR. REFER TO DRAWING E-322 FOR FIRE ALARM SMOKE DETECTOR LOCATION. COORDINATE WITH MECHANICAL CONTRACTOR FOR EXACT MOTORIZED SMOKE DAMPER LOCATION PRIOR TO MAKE ALL POWER AND FIRE ALARM CONNECTION.
12. JUNCTION BOX AND CONVERTER FOR AUTOMATIC FAUCETS. THE WIRING BETWEEN CONVERTER AND FAUCETS SHALL BE PROVIDED BY THE ELECTRICAL CONTRACTOR. COORDINATE WITH PLUMBING CONTRACTOR FOR EXACT SPECIFICATIONS, LOCATION, MOUNTING HEIGHT AND ALL CONNECTION REQUIREMENTS PRIOR TO INSTALLATION.
13. JUNCTION BOX FOR TRAP PRIMERS. COORDINATE WITH PLUMBING CONTRACTOR AND MANUFACTURER FOR EXACT LOCATION, MOUNTING HEIGHT, SPECIFICATION AND CONNECTION REQUIREMENTS PRIOR TO INSTALLATION.
14. PROVIDE JUNCTION BOX POWER FEED FOR RECEPTACLES ON FULL HEIGHT DEMOUNTABLE PARTITIONS AND 7' HIGH SYSTEM FURNITURE PARTITIONS. RECEPTACLE MUST BE PREFABRICATED WITH THE PARTITION WALLS AND ALSO COME WITH FLEXIBLE RACEWAY SYSTEM FOR INTERCONNECTIONS. ELECTRICAL CONTRACTOR SHALL DO THE FINAL CONNECTION FROM JUNCTION BOX/RECEPTACLE UP TO THE PANELBOARD.

REVISED DRAWING
09/15/16

NEW YORK STATE OF OPPORTUNITY. Office of General Services

DESIGN & CONSTRUCTION

CONSULTANT

STV 100 Years

225 Park Avenue South
New York, NY 10003
t 212.777.4400 f 212.529.5237
www.stvinc.com

SETTY

WARNING:
THE ALTERATION OF THIS MATERIAL IN ANY WAY, UNLESS DONE UNDER THE DIRECTION OF A COMPARABLE PROFESSIONAL, I.E. ARCHITECT FOR AN ARCHITECT, ENGINEER FOR AN ENGINEER, OR LANDSCAPE ARCHITECT FOR A LANDSCAPE ARCHITECT, IS A VIOLATION OF THE NEW YORK STATE EDUCATION LAW AND/OR REGULATIONS AND IS A CLASS 'A' MISDEMEANOR.

N

STATE OF NEW YORK · CONRAD D DELA CRUZ · 089760 · LICENSED PROFESSIONAL ENGINEER
09/15/2016

CONTRACT: ELECTRICAL

TITLE: ABATE HAZARDOUS MATERIALS & RENOVATE BUILDING 4

LOCATION: STATE OFFICE BUILDING CAMPUS
1220 WASHINGTON AVE.
ALBANY, NY 12226

CLIENT: OFFICE OF GENERAL SERVICES

KEY PLAN:

A B C

MARK	DATE	DESCRIPTION
4	09/15/16	ADDENDUM No. 1
3	07/11/16	BID DOCUMENTS
2	06/10/16	FINAL COMPLIANCE
1	03/21/16	FINAL FOR REVIEW

PROJECT NUMBER:	45124 - E
DESIGNED BY:	VL/SM
DRAWN BY:	DAT
FIELD CHECK:	CD
APPROVED:	CD
SCALE:	1/8" = 1'-0"

SHEET TITLE:

ELECTRICAL SECOND FLOOR POWER PLAN B

DRAWING NUMBER:

E-222

SHEET 18 OF 56

9/15/2016 2:24:48 PM
36x24 PLOT SHEET

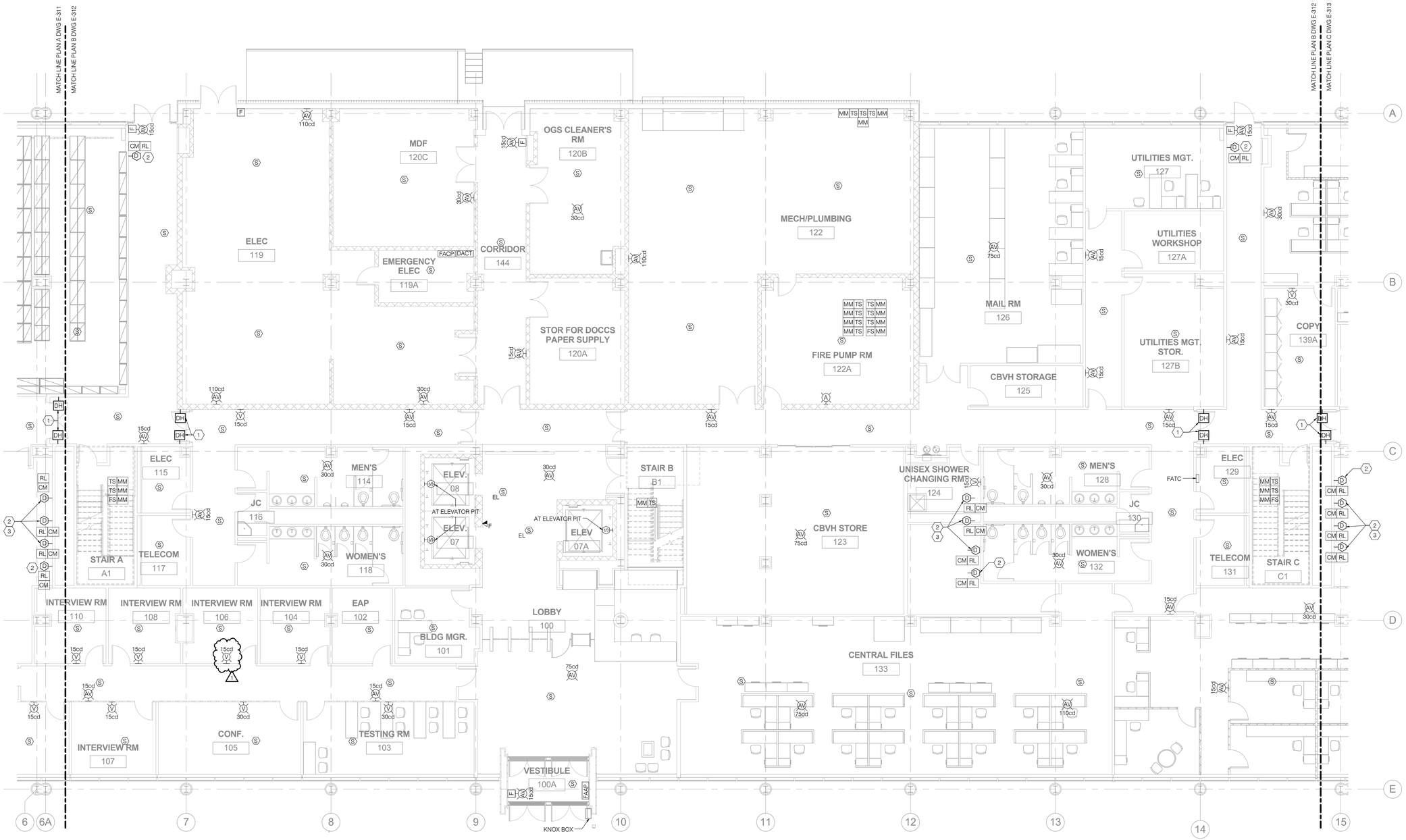

GENERAL NOTES

1. REFER TO DRAWING E-311 FOR FIRE ALARM GENERAL NOTES.

SHEET KEY NOTES

1. FAIL SAFE TYPE F/A MAGNETIC DOOR HOLDER.
2. INTERLOCK DUCT SMOKE DETECTOR WITH MOTORIZED SMOKE DAMPER (DAMPER BY DIV. 23), WHICH SHALL CLOSE UPON ACTIVATION OF THE SMOKE DETECTOR. SMOKE DETECTOR SHALL ACTIVATE FIRE ALARM NOTIFICATION DEVICES AND ACTIVATE VISIBLE AND SUPERVISORY SIGNALS. PROVIDE AN AUXILIARY RELAY WITH ZAM (PROGRAMMABLE ZONE ADAPTER MODULE) TO CONTROL AND SUPERVISE DAMPER BY THE FACP. REFER TO POWER PLAN DRAWING E-212. COORDINATE WITH MECHANICAL CONTRACTOR FOR EXACT LOCATION OF THE DAMPERS AND DUCT SMOKE DETECTORS.
3. ACTIVATION OF DUCT SMOKE DETECTOR IN ANY OF AIR HANDLING UNIT SHALL SEND THE SIGNAL TO FIRE ALARM CONTROL PANEL AND BMS WHICH IN TURN SHALL TURN OFF ALL THE AIR HANDLING UNITS.

REVISED DRAWING
09/15/16

9/15/2016 8:49:16 PM
36x24 PLOT SHEET

NEW YORK STATE OF OPPORTUNITY. Office of General Services

DESIGN & CONSTRUCTION

CONSULTANT

STV 100 Years

225 Park Avenue South
New York, NY 10003
t 212.777.4400 f 212.529.5237
www.stvinc.com

SETTY

WARNING:
THE ALTERATION OF THIS MATERIAL IN ANY WAY, UNLESS DONE UNDER THE DIRECTION OF A COMPARABLE PROFESSIONAL, I.E. ARCHITECT FOR AN ARCHITECT, ENGINEER FOR AN ENGINEER, OR LANDSCAPE ARCHITECT FOR A LANDSCAPE ARCHITECT, IS A VIOLATION OF THE NEW YORK STATE EDUCATION LAW AND/OR REGULATIONS AND IS A CLASS 'A' MISDEMEANOR.

N

STATE OF NEW YORK · CONRAD D DELA CRUZ · 089769 · LICENSED PROFESSIONAL ENGINEER
09/15/2016

CONTRACT: ELECTRICAL

TITLE: ABATE HAZARDOUS MATERIALS & RENOVATE BUILDING 4

LOCATION: STATE OFFICE BUILDING CAMPUS
1220 WASHINGTON AVE.
ALBANY, NY 12226

CLIENT: OFFICE OF GENERAL SERVICES

KEY PLAN:

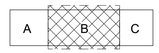

MARK	DATE	DESCRIPTION
4	09/15/16	ADDENDUM No. 1
3	07/11/16	BID DOCUMENTS
2	06/10/16	FINAL COMPLIANCE
1	03/21/16	FINAL FOR REVIEW

PROJECT NUMBER:	45124 - E
DESIGNED BY:	VL/SM
DRAWN BY:	DAT
FIELD CHECK:	CD
APPROVED:	CD
SCALE:	1/8" = 1'-0"

SHEET TITLE:

FIRE ALARM FIRST FLOOR PLAN B

DRAWING NUMBER:

E-312

SHEET 28 OF 56

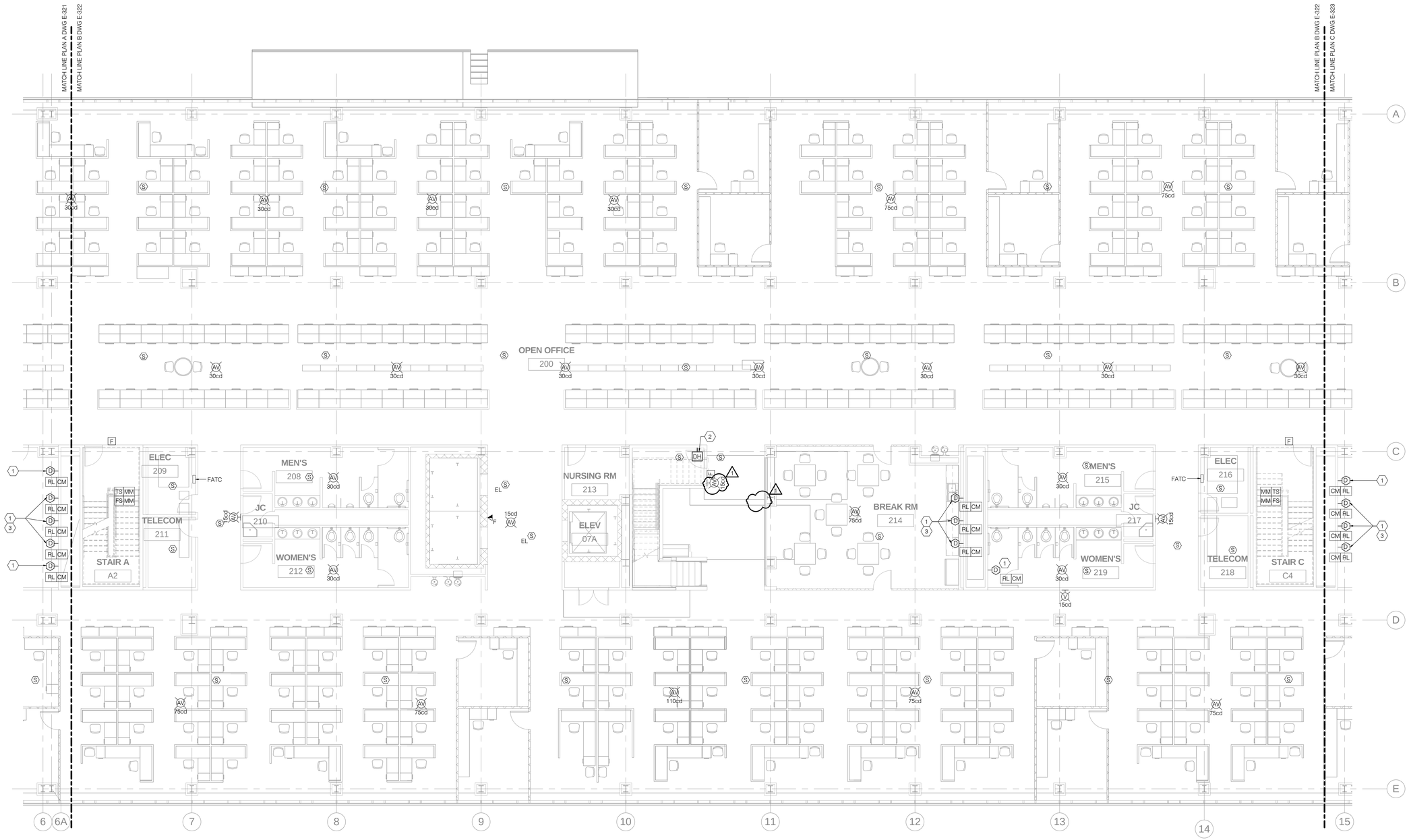

GENERAL NOTES

1. REFER TO DRAWING E-311 FOR FIRE ALARM GENERAL NOTES.

SHEET KEY NOTES

1. INTERLOCK DUCT SMOKE DETECTOR WITH MOTORIZED SMOKE DAMPER (DAMPER BY DIV. 23), WHICH SHALL CLOSE UPON ACTIVATION OF THE SMOKE DETECTOR. SMOKE DETECTOR SHALL ACTIVATE FIRE ALARM NOTIFICATION DEVICES AND ACTIVATE VISIBLE AND SUPERVISORY SIGNALS. PROVIDE AN AUXILIARY RELAY WITH ZAM (PROGRAMMABLE ZONE ADAPTER MODULE) TO CONTROL AND SUPERVISE DAMPER BY THE FACP. REFER TO POWER PLAN DRAWING E-222. COORDINATE WITH MECHANICAL CONTRACTOR FOR EXACT LOCATION OF THE DAMPERS AND DUCT SMOKE DETECTORS.
2. FAIL SAFE TYPE F/A MAGNETIC DOOR HOLDER.
3. ACTIVATION OF DUCT SMOKE DETECTOR IN ANY OF AIR HANDLING UNIT SHALL SEND THE SIGNAL TO FIRE ALARM CONTROL PANEL AND BMS WHICH IN TURN SHALL TURN OFF ALL THE AIR HANDLING UNITS.

REVISED DRAWING
09/15/16

9/15/2016 2:24:51 PM
36x24 PLOT SHEET

NEW YORK STATE OF OPPORTUNITY. Office of General Services

DESIGN & CONSTRUCTION

CONSULTANT

STV 100 Years

225 Park Avenue South
New York, NY 10003
t 212.777.4400 f 212.529.5237
www.stvinc.com

SETTY

WARNING:
THE ALTERATION OF THIS MATERIAL IN ANY WAY, UNLESS DONE UNDER THE DIRECTION OF A COMPARABLE PROFESSIONAL, I.E. ARCHITECT FOR AN ARCHITECT, ENGINEER FOR AN ENGINEER, OR LANDSCAPE ARCHITECT FOR A LANDSCAPE ARCHITECT, IS A VIOLATION OF THE NEW YORK STATE EDUCATION LAW AND/OR REGULATIONS AND IS A CLASS 'A' MISDEMEANOR.

N

STATE OF NEW YORK · CONRAD D DELA CRUZ · 089769 · LICENSED PROFESSIONAL ENGINEER
09/15/2016

CONTRACT: ELECTRICAL

TITLE: ABATE HAZARDOUS MATERIALS & RENOVATE BUILDING 4

LOCATION: STATE OFFICE BUILDING CAMPUS
1220 WASHINGTON AVE.
ALBANY, NY 12226

CLIENT: OFFICE OF GENERAL SERVICES

KEY PLAN:

A B C

MARK	DATE	DESCRIPTION
4	09/15/16	ADDENDUM No. 1
3	07/11/16	BID DOCUMENTS
2	06/10/16	FINAL COMPLIANCE
1	03/21/16	FINAL FOR REVIEW

PROJECT NUMBER:	45124 - E
DESIGNED BY:	VL/SM
DRAWN BY:	DAT
FIELD CHECK:	CD
APPROVED:	CD
SCALE:	1/8" = 1'-0"

SHEET TITLE:

FIRE ALARM SECOND FLOOR PLAN B

DRAWING NUMBER:

E-322

SHEET 31 OF 56

PLUMBING EQUIPMENT ELECTRICAL CONNECTION SCHEDULE

UNIT MARK	UNIT DESCRIPTION	VOLTAGE / PHASE	HP	LOAD KW	FLA	MCA	MOCP	UNIT DISC. SW.	INDIVIDUAL STARTER	FEEDER	REMARKS
SP-1 &SP-2	ELEVATOR SUMP PUMP	208/3	1	-	4.8	6	20	SM	-	3#12 + 1#12 G IN 3/4"C	
BP-1	BOOSTER PUMPS	208/3	3	-	11	13.75	20	30/NFSS	VFD	3#12 + 1#12 G IN 3/4"C	
CP-1A	HOT WATER CIRCULATOR PUMP	120/1	2/5	-	4.4	5.5	20	SM	-	2#12 + 1#12 G IN 3/4"C	
CP-1B	HOT WATER CIRCULATOR PUMP	120/1	2/5	-	4.4	5.5	20	SM	-	2#12 + 1#12 G IN 3/4"C	STANDBY PUMP
FP-1	AUTOMATIC FIRE PUMP	480/3	100	-	124	REFER TO DRAWING E-501 FOR MORE INFORMATION			DIV.23	REFER TO DRAWING E-501 FOR MORE INFORMATION	
JP-1	JOCKEY PUMP	480/3	2	-	3.4	4.25	20	30/NFSS	DIV.23	3#12 + 1#12 G IN 3/4"C	

NOTES:
1. ALL OUTDOOR DISCONNECT SWITCHES SHALL BE IN NEMA 3R ENCLOSURE TYPE, UNLESS OTHERWISE NOTED.
2. ALL FUSE SIZE FOR EQUIPMENT DISCONNECT SWITCH SHALL BE BASED ON EQUIPMENT'S NAME PLATE AS PER EQUIPMENT MANUFACTURER RECOMMENDATION.
3. ALL SWITCHES SHALL BE DUAL ELEMENT TYPE.

MECHANICAL EQUIPMENT ELECTRICAL CONNECTION SCHEDULE

UNIT MARK	UNIT DESCRIPTION	VOLTAGE / PHASE	HP	LOAD KW	FLA	MCA	MOCP	UNIT DISC. SW.	MOTOR CONTROLLER	FEEDER	REMARKS
AHU-1, AHU-2, AHU-3	AIR HANDLING UNIT SUPPLY FAN AIR HANDLING UNIT RETURN FAN	480/3	40 20	-	90.5	113.1	150	200/125	DIV. 23	3#1/0 + 1#6 G IN 1 1/2"C	
AHU-4	AIR HANDLING UNIT SUPPLY FAN	208/3	5	-	22.5	28	50	60/50	DIV. 23	3#6 + 1#10 G IN 1"C	
AHU-5	AIR HANDLING UNIT SUPPLY FAN AIR HANDLING UNIT RETURN FAN	480/3	3 3	-	12.3	13.6	30	30/30	DIV. 23	3#10 + 1#10 G IN 3/4"C	PROVIDE NEMA 3R DISCONNECT SWITCH
FPWP-1,2,3	FREEZE PROTECTION WATER PUMP	480/3	1	-	2.1	2.62	20	30/20	DIV. 23	3#12 + 1#12 G IN 3/4"C	
HWP-1	HOT WATER PUMP	480/3	15	-	21	26.2	40	60/40	VFD	3#8 + 1#10 G IN 1"C	
HWP-2	HOT WATER PUMP	480/3	15	-	21	26.2	40	60/40	VFD	3#8 + 1#10 G IN 1"C	STANDBY PUMP
CHWP-1	CHILLED WATER PUMP	480/3	25	-	34	42.5	70	100/70	VFD	3#4 + 1#8 G IN 1"C	
CHWP-2	CHILLED WATER PUMP	480/3	25	-	34	42.5	70	100/70	VFD	3#4 + 1#8 G IN 1"C	STANDBY PUMP
CHWP-3	CHILLED WATER PUMP	480/3	40	-	52	65	90	100/90	VFD	3#2 + 1#8 G IN 1 1/4"C	
CHWP-4	CHILLED WATER PUMP	480/3	40	-	52	65	90	100/90	VFD	3#2 + 1#8 G IN 1 1/4"C	STANDBY PUMP
SCP-1	STEAM CONDENSATE PUMP	120/1	0.75	-	13.8	17.25	25	30/25	DIV. 23	2#10 + 1#10 G IN 3/4"C	
CP-1	CONDENSATE PUMP	120/1	-	0.02	-	-	20	SM	SIZE 0	2#12 + 1#12 G IN 3/4"C	
CO-1	AIR COMPRESSOR PUMP	208/3	2	-	7.8	9.75	20	30/20	DIV. 23	3#12 + 1#12 G IN 3/4"C	
CH-1	MODULAR AIR COOLED CHILLER	480/3	90	-	277	286	350	400/350	VFD	3#500 KCMIL + 1#2 G IN 3"C	PROVIDE NEMA 3R DISCONNECT SWITCH
DC-1	DRY COOLER	480/3	1.5	-	7.1	15	20	30/20	DIV. 23	3#12 + 1#12 G IN 3/4"C	PROVIDE NEMA 3R DISCONNECT SWITCH
DC-P	DRY COOLER - PUMP	480/3	-	-	3.2	3.9	20	30/15	DIV. 23	3#12 + 1#12 G IN 3/4"C	
EF-1	EXHAUST FAN	208/3	0.57	-	2.85	3.56	20	30/20	VFD	3#12 + 1#12 G IN 3/4"C	
EF-2	EXHAUST FAN	208/3	0.47	-	2.35	2.93	20	30/20	VFD	3#12 + 1#12 G IN 3/4"C	
EF-3	EXHAUST FAN	208/1	0.36	-	3.52	4.4	20	30/20	VFD	2#12 + 1#12 G IN 3/4"C	
GEF-1	EXHAUST FAN	208/1	0.29	-	2.84	3.55	20	30/20	VFD	2#12 + 1#12 G IN 3/4"C	
GEF-2	EXHAUST FAN	208/1	0.41	-	4.01	5.02	20	30/20	VFD	2#12 + 1#12 G IN 3/4"C	
TEF-1	EXHAUST FAN	208/3	0.88	-	4.4	5.5	20	30/20	VFD	3#12 + 1#12 G IN 3/4"C	
TEF-2	EXHAUST FAN	208/3	0.83	-	4.15	5.18	20	30/20	VFD	3#12 + 1#12 G IN 3/4"C	
FCU-1, FCU-2	FAN COIL UNIT	1 208/3	-	-	-	5.75	20	30/20	-	3#12 + 1#12 G IN 3/4"C 1	
GFU-1 & GFU-2	GLYCOL FEEDER UNIT	120/1	0.5	-	9.8	12.2	20	SM	-	2#12 + 1#12 G IN 3/4"C	
ACU-1	AIR CONDITIONING UNIT	208/1	-	10	-	59.6	60	60/60	DIV. 23	2#4 + 1#8 G IN 1"C	PROVIDE NEMA 3R DISCONNECT SWITCH
ACU-2	AIR CONDITIONING UNIT	208/1	-	7.5	-	58	60	60/60	DIV. 23	2#4 + 1#8 G IN 1"C	PROVIDE NEMA 3R DISCONNECT SWITCH
AC-1-1 TO 1-4, 1-6 & 1-7	COMPUTER ROOM SYSTEM INDOOR UNIT	208/1	-	-	8.8	14.3	20	30/20	DIV. 23	2#12 + 1#12 G IN 3/4"C	
AC-1-5	COMPUTER ROOM SYSTEM INDOOR UNIT	208/1	-	-	17.7	26	50	60/50	DIV. 23	2#6 + 1#10 G IN 1"C	
AC-2-1 TO 2-4	COMPUTER ROOM SYSTEM INDOOR UNIT	208/1	-	-	8.8	14.3	20	30/20	DIV. 23	2#12 + 1#12 G IN 3/4"C	
AC-3-1 TO 3-4	COMPUTER ROOM SYSTEM INDOOR UNIT	208/1	-	-	8.8	14.3	20	30/20	DIV. 23	2#12 + 1#12 G IN 3/4"C	
AC-C-1,2,5	SPLIT SYSTEM/VRV SYSTEM INDOOR UNIT	208/1	-	-	-	3.4	20	SM	-	2#12 + 1#12 G IN 3/4"C	
AC-C-3,4,11-21,24,25	SPLIT SYSTEM/VRV SYSTEM INDOOR UNIT	208/1	-	-	-	0.8	20	SM	-	2#12 + 1#12 G IN 3/4"C	
AC-C-9,22,23	SPLIT SYSTEM/VRV SYSTEM INDOOR UNIT	208/1	-	-	-	2.8	20	SM	-	2#12 + 1#12 G IN 3/4"C	
AC-C-6,8	SPLIT SYSTEM/VRV SYSTEM INDOOR UNIT	208/1	-	-	-	1.8	20	SM	-	2#12 + 1#12 G IN 3/4"C	
AC-C-7,10	SPLIT SYSTEM/VRV SYSTEM INDOOR UNIT	208/1	-	-	-	2.9	20	SM	-	2#12 + 1#12 G IN 3/4"C	
BSB-1 TO BSB-25	BRANCH SELECTOR BOX	208/1	-	-	-	0.1	20	SM	-	2#12 + 1#12 G IN 3/4"C	
ACC-C-1	SPLIT SYSTEM/VRV SYSTEM OUTDOOR UNIT	208/3 208/3	- -	- -	38.8 38.8	55 55	70 70	100/70 100/70	DIV. 23	3#4 + 1#8 G IN 1"C 3#4 + 1#8 G IN 1"C	PROVIDE NEMA 3R DISCONNECT SWITCH
ACC-C-2	SPLIT SYSTEM/VRV SYSTEM OUTDOOR UNIT	208/3 208/3	- -	- -	41.8 38.8	61.9 55	70 70	100/70 100/70	DIV. 23	3#4 + 1#8 G IN 1"C 3#4 + 1#8 G IN 1"C	PROVIDE NEMA 3R DISCONNECT SWITCH
EH-1, EH-4 1	ELECTRICAL HEATER	208/1	0.008	-	-	15.9	20	SM	-	2#12 + 1#12 G IN 3/4"C	
EH-2 & EH-3	ELECTRICAL HEATER	208/1	0.008	-	-	24	30	SM	-	2#10 + 1#10 G IN 3/4"C	
CUH-1, 2A, 2B, 5A, 5B, 6 TO 9	CABINET UNIT HEATER	120/1	0.033	-	0.7	0.9	20	SM	-	2#12 + 1#12 G IN 3/4"C	
UH-1	UNIT HEATER	120/1	0.017	-	0.4	0.5	20	SM	-	2#12 + 1#12 G IN 3/4"C	
UH-2 TO UH-5	UNIT HEATER	120/1	0.333	-	7.2	9	20	SM	-	2#12 + 1#12 G IN 3/4"C	
ACC-S	SPLIT SYSTEM/VRV SYSTEM OUTDOOR UNIT	208/3	-	-	20.7	30.2	35	60/35	-	3#8 + 1#10 G IN 1"C	PROVIDE NEMA 3R DISCONNECT SWITCH
AC-S-1	SPLIT SYSTEM/VRV SYSTEM INDOOR UNIT	208/3	-	-	-	3.4	20	30/20	DIV. 23	3#12 + 1#12 G IN 3/4"C	
AC-S-2	SPLIT SYSTEM/VRV SYSTEM INDOOR UNIT	208/3	-	-	-	0.9	20	30/20	DIV. 23	3#12 + 1#12 G IN 3/4"C	
BSB-S-1 & BSB-S-2	BRANCH SELECTOR BOX	208/3	-	-	-	0.1	20	30/20	DIV. 23	3#12 + 1#12 G IN 3/4"C	

NOTES:
1. ALL OUTDOOR DISCONNECT SWITCHES SHALL BE IN NEMA 3R ENCLOSURE TYPE, UNLESS OTHERWISE NOTED.
2. ALL FUSE SIZE FOR EQUIPMENT DISCONNECT SWITCH SHALL BE BASED ON EQUIPMENT'S NAME PLATE AS PER EQUIPMENT MANUFACTURER RECOMMENDATION.
3. ALL SWITCHES SHALL BE DUAL ELEMENT TYPE
4. PROVIDE 120V SIMPLEX OUTLET FED FROM EMERGENCY POWER FOR CONDENSATE PUMP SERVING AC-C INDOOR UNITS WHEREVER REQUIRED.

REVISED DRAWING
09/15/16

NEW YORK STATE OF OPPORTUNITY. Office of General Services

DESIGN & CONSTRUCTION

CONSULTANT

STV 100 Years

225 Park Avenue South
New York, NY 10003
t 212.777.4400 f 212.529.5237
www.stvinc.com

SETTY

WARNING:
THE ALTERATION OF THIS MATERIAL IN ANY WAY, UNLESS DONE UNDER THE DIRECTION OF A COMPARABLE PROFESSIONAL, I.E. ARCHITECT FOR AN ARCHITECT, ENGINEER FOR AN ENGINEER, OR LANDSCAPE ARCHITECT FOR A LANDSCAPE ARCHITECT, IS A VIOLATION OF THE NEW YORK STATE EDUCATION LAW AND/OR REGULATIONS AND IS A CLASS 'A' MISDEMEANOR.

N

STATE OF NEW YORK · CONRAD D DELA CRUZ · 089768 · LICENSED PROFESSIONAL ENGINEER
09/15/2016

CONTRACT:
ELECTRICAL

TITLE:
ABATE HAZARDOUS MATERIALS & RENOVATE BUILDING 4

LOCATION:
STATE OFFICE BUILDING CAMPUS
1220 WASHINGTON AVE.
ALBANY, NY 12226

CLIENT:
OFFICE OF GENERAL SERVICES

KEY PLAN:

MARK	DATE	DESCRIPTION
1	09/15/16	ADDENDUM No. 1
3	07/11/16	BID DOCUMENTS
2	06/10/16	FINAL COMPLIANCE
1	03/21/16	FINAL FOR REVIEW

PROJECT NUMBER:	45124 - E
DESIGNED BY:	VL/SM
DRAWN BY:	DAT
FIELD CHECK:	CD
APPROVED:	CD
SCALE:	NOT TO SCALE

SHEET TITLE:
MECHANICAL AND PLUMBING SCHEDULES

DRAWING NUMBER:
E-601

SHEET 44 OF 56

10/2/2015 9:37:52 AM
38X24 PLOT SHEET

MAIN SWITCHGEAR - DIST. SECTION

VOLTAGE: 480/277V, 3P, 4W — BUS SIZE: 2500A
LOCATION: FIRST FLOOR-MAIN ELECTRICAL ROOM 119 — AIC RATING: 65K

CUBICLE No.	LOAD SERVED	BREAKER RATING FRAME	TRIP	POLE	TOTAL CONNECTED LOAD (KVA)	REMARKS
	PRIMARY SWITCH					
	1500KVA TRANSFORMER					
1	FIRE PUMP (EAST)	N/A			79.6	TAP SECTION FOR EMERGENCY
2	MAIN - WEST	2500	2500	3		EQUIPPED WITH GROUND FAULT
3A	PANEL MG	800	400	3	89	
3B	PANEL MDP	1600	1600	3	725	
3C	SPARE	800	400	3		
3D	SPARE	800	400	3		
4	MAIN - TIE BREAKER	2500	2500	3		
5A	SPARE	800	400	3		
5B	PANEL MMDP	800	800	3	471	
5C	PANEL EH VIA ATS-3	800	600	3	423	
5D	PANEL EM VIA ATS-2	800	125	3	30	
6	MAIN (WEST)	2500	2500	3		EQUIPPED WITH GROUND FAULT
7	FIRE PUMP (EAST)	N/A				TAP SECTION FOR EMERGENCY
	1500KVA TRANSFORMER					
	PRIMARY SWITCH					
SWITCHGEAR CONNECTED LOAD (KVA):					**1817**	

NOTE: REFER TO DEMAND LOAD SUMMARY ON THIS DRAWING.

SWITCHBOARD MDP- DIST. SECTION

VOLTAGE: 480/277V, 3P, 4W — BUS SIZE: 1600A
LOCATION: FIRST FLOOR-MAIN ELECTRICAL ROOM 119 — AIC RATING: 65K

CUBICLE No.	LOAD SERVED	BREAKER RATING FRAME	TRIP	POLE	TOTAL CONNECTED LOAD (KVA)	TOTAL DEMAND LOAD (KVA)	REMARKS
1A	PANEL H1W, H2W, H3W	225	150	3	28.3	35	
1B	PANEL H1E, H2E, H3E	225	150	3	28.6	36	
1C	PANEL L1W VIA 75KVA XFMR	125	125	3	108.512	73	
1D	PANEL L1E VIA 75KVA XFMR	125	125	3	106.712	70	
1E	PANEL L2W VIA 75KVA XFMR	125	125	3	97	54	
1F	PANEL L2E VIA 75KVA XFMR	125	125	3	96	53	
1G	PANEL L3W VIA 75KVA XFMR	125	125	3	93	52	
1H	PANEL L3E VIA 75KVA XFMR	125	125	3	57	34	
1I	PANEL LP VIA 45KVA XFMR	100	70	3	16	16	
1J	PANEL SP	225	225	3	50	50	
1K	PANEL LH-BLDG1	100	100	3	24	24	
1L	PANEL FP VIA 75KVA XFMR	125	125	3	19	19	
1M	TVSS	100	60	3	1	1	
1N	FOR FUTURE PANEL LG VIA 75KVA XFMR	125	125	3	0	0	DEDICATED FOR FUTURE FEED TO CBVH STORE
1O	SPARE	225	225	3			
1P	SPARE	125	125	3			
1Q	SPARE	125	125	3			
1R	SPACE ONLY						
1S	SPACE ONLY						
SWITCHBOARD CONNECTED LOAD (KVA):					**725**		
SWITCHBOARD DEMAND LOAD(KVA):						**516**	
SWITCHBOARD CURRENT (AMPS)						**621**	

PANEL MG

PROJECT: OFFICE OF GENERAL SERVICES — PANEL VOLTAGE: 480/277V — AIC RATING: 42K
PANEL: MG — PHASE & WIRE: 3PH, 4W — MOUNTING: SURFACE
LOCATION FIRST FLOOR-MAIN ELECTRICAL ROOM 119 — BUS/MAIN (AMPS): 400A MCB — NEMA TYPE: 1

CKT NO.	OCD A	P	DESCRIPTION	MISC	HWH	HVAC	REC	LTG	A	B	C	MISC	HWH	HVAC	REC	LTG	DESCRIPTION	OCD A	P	CKT NO.
1	70	3	CHWP-1 MECH/PLUMBING 122	9.4					23.7			14.3					CHWP-3 MECH/PLUMBING 122	90	3	2
3	/	/	/	9.4						23.7		14.3					/	/	/	4
5	/	/	/	9.4							23.7	14.3					/	/	/	6
7	70	3	CHWP-2 M/P 122 (STANDBY)						0.0								CHWP-4 M/P 122 (STANDBY)	90	3	8
9	/	/	/							0.0							/	/	/	10
11	/	/	/								0.0						/	/	/	12
13	20	3	SPARE						5.8			5.8					HWP-1 MECH/PLUMBING 122	40	3	14
15	/	/	/							5.8		5.8					/	/	/	16
17	/	/	/								5.8	5.8					/	/	/	18
19	20	3	SPARE						0.0								HWP-2 M/P 122 (STANDBY)	40	3	20
21	/	/	/							0.0							/	/	/	22
23	/	/	/								0.0						/	/	/	24
25	40	3	SPARE						0.0								SPARE	20	3	26
27	/	/	/							0.0							/	/	/	28
29	/	/	/								0.0						/	/	/	30
31	20	3	SPARE						0.0								SPARE	40	3	32
33	/	/	/							0.0							/	/	/	34
35	/	/	/								0.0						/	/	/	36
37			SPACE ONLY						0.1			0.1					TVSS	30	3	38
39			SPACE ONLY							0.1		0.1					/	/	/	40
41			SPACE ONLY								0.1	0.1					/	/	/	42
CONNECTED LOAD (KVA)				28.2	0.0	0.0	0.0	0.0	29.6	29.6	29.6	60.6	0.0	0.0	0.0	0.0				
25% OF LARGEST MOTOR (KVA)																				
TOTAL CONNECTED LOAD (KVA)				88.8	0.0	0.0	0.0	0.0												
DEMAND FACTOR				1.0	1.25	1.0	X	1.25									TOTAL DEMAND (KVA)	89		
TOTAL DEMAND LOAD (KVA)				88.8	0.0	0.0	0.0	0.0									LINE CURRENT (AMPS)	107		

X= 1ST 10KVA @ 100%, + REMAINDER @ 50% (N.E.C. 220-44)

PANEL EM

PROJECT: OFFICE OF GENERAL SERVICES — PANEL VOLTAGE: 480/277V — AIC RATING: 42K
PANEL: EM — PHASE & WIRE: 3PH, 4W — MOUNTING: SURFACE
LOCATION FIRST FLOOR- EMERGENCY ELECTRICAL ROOM 119A — BUS/MAIN (AMPS): 125A MCB — NEMA TYPE: 1

CKT NO.	OCD A	P	DESCRIPTION	MISC	HWH	HVAC	REC	LTG	A	B	C	MISC	HWH	HVAC	REC	LTG	DESCRIPTION	OCD A	P	CKT NO.
1	20	3	JP-1 FIRE PUMP ROOM 122A	0.9					3.4							2.5	LTG- EM 1ST FLOOR WEST	20	1	2
3	/	/	/	0.9						3.0						2.1	LTG- EM 1ST FLOOR EAST	20	1	4
5	/	/	/	0.9							2.5					1.6	LTG- WEST SECOND FLOOR	20	1	6
7	20	1	LTG- EM 3RD FLOOR WEST					1.7	3.1							1.4	LTG- EAST SECOND FLOOR	20	1	8
9	20	1	LTG- EM 3RD FLOOR EAST					1.7		2.3						0.6	LTG- EM PENTHOUSE	20	1	10
11	20	1	LTG- EM COMMAND CENTER 3RD FLOOR					2.2			2.4					0.2	LTG- EM STAIR A	20	1	12
13	20	1	LTG- EM COMMAND CENTER 3RD FLOOR					2.7	2.8							0.1	LTG- EM STAIR B	20	1	14
15	20	1	LTG- EM EXTERIOR					0.3		0.5						0.2	LTG- EM STAIR C	20	1	16
17	20	1	SPARE								0.0						SPARE	20	1	18
19	20	1	SPARE						0.0								SPARE	20	1	20
21	20	1	SPARE							0.0							SPARE	20	1	22
23	20	1	SPARE								0.0						SPARE	20	1	24
25	20	1	SPARE						0.0								SPARE	20	1	26
27	20	1	SPARE							0.0							SPARE	20	1	28
29	20	1	SPARE								0.0						SPARE	20	1	30
31			SPACE ONLY						0.0								SPACE ONLY			32
33			SPACE ONLY							0.0							SPACE ONLY			34
35			SPACE ONLY								0.0						SPACE ONLY			36
37	70	3	PANEL EL VIA 45KVA XFMR	3.1	0.0	0.0	0.0	0.0	3.2			0.1					TVSS	30	3	38
39	/	/	/	3.1	0.0	0.0	0.0	0.0		3.2		0.1					/	/	/	40
41	/	/	/	3.1	0.0	0.0	0.0	0.0			3.2	0.1					/	/	/	42
CONNECTED LOAD (KVA)				12.1	0.0	0.0	0.0	8.6	12.5	9.0	8.1	0.3	0.0	0.0	0.0	8.7				
25% OF LARGEST MOTOR (KVA)																				
TOTAL CONNECTED LOAD (KVA)				12.4	0.0	0.0	0.0	17.3												
DEMAND FACTOR				1.0	1.25	1.0	X	1.25									TOTAL DEMAND (KVA)	34		
TOTAL DEMAND LOAD (KVA)				12.4	0.0	0.0	0.0	21.6									LINE CURRENT (AMPS)	41		

X= 1ST 10KVA @ 100%, + REMAINDER @ 50% (N.E.C. 220-44)

PANEL EH

PROJECT: OFFICE OF GENERAL SERVICES — PANEL VOLTAGE: 480/277V — AIC RATING: 42K
PANEL: EH — PHASE & WIRE: 3PH, 4W — MOUNTING: SURFACE
LOCATION FIRST FLOOR- EMERGENCY ELECTRICAL ROOM 119A — BUS/MAIN (AMPS): 600A MCB — NEMA TYPE: 1

CKT NO.	OCD A	P	DESCRIPTION	MISC	HWH	HVAC	REC	LTG	A	B	C	MISC	HWH	HVAC	REC	LTG	DESCRIPTION	OCD A	P	CKT NO.
1	80	3	ELEV 7 & 8 MACHINE ROOM 401	11.6					19.1			7.5					ELEVATOR 7A	60	3	2
3	/	/	/	11.6						19.1		7.5					/	/	/	4
5	/	/	/	11.6							19.1	7.5					/	/	/	6
7	20	3	DC-1 ROOF	2.0					2.9			0.9					DC-P PENTHOUSE	20	3	8
9	/	/	/	2.0						2.9		0.9					/	/	/	10
11	/	/	/	2.0							2.9	0.9					/	/	/	12
13	20	1	SPARE						0.0								SPARE	20	1	14
15	20	1	SPARE							0.0							SPARE	20	1	16
17	20	1	SPARE								0.0						SPARE	20	1	18
19	20	1	SPARE						0.0								SPARE	20	1	20
21	20	1	SPARE							0.0							SPARE	20	1	22
23	20	1	SPARE								0.0						SPARE	20	1	24
25	20	1	SPARE						0.0								SPACE ONLY			26
27	20	1	SPARE							0.0							SPACE ONLY			28
29	20	1	SPARE								0.0						SPACE ONLY			30
31			SPACE ONLY						0.1			0.1					TVSS	30	3	32
33			SPACE ONLY							0.1		0.1					/	/	/	34
35			SPACE ONLY								0.1	0.1					/	/	/	36
37	350	3	PANEL EHL VIA 225KVA XFMR	5.6	0.0	37.8	75.6	0.0	119.0								SPARE	100	3	38
39	/	/	/	5.6	0.0	37.8	75.6	0.0		119.0							/	/	/	40
41	/	/	/	5.6	0.0	37.8	75.6	0.0			119.0						/	/	/	42
CONNECTED LOAD (KVA)				57.7	0.0	113.5	226.7	0.0	141.1	141.1	141.1	25.4	0.0	0.0	0.0	0.0				
25% OF LARGEST MOTOR (KVA)																				
TOTAL CONNECTED LOAD (KVA)				83.1	0.0	113.5	226.7	0.0												
DEMAND FACTOR				1.0	1.25	1.0	X	1.25									TOTAL DEMAND (KVA)	315		
TOTAL DEMAND LOAD (KVA)				83.1	0.0	113.5	118.4	0.0									LINE CURRENT (AMPS)	379		

X= 1ST 10KVA @ 100%, + REMAINDER @ 50% (N.E.C. 220-44)

PANEL EMDF

PROJECT: OFFICE OF GENERAL SERVICES — PANEL VOLTAGE: 120/208V — AIC RATING: 22K
PANEL: EMDF — PHASE & WIRE: 3PH, 4W — MOUNTING: SURFACE
LOCATION FIRST FLOOR- MDF ROOM 120C — BUS/MAIN (AMPS): 100A MCB — NEMA TYPE: 1

CKT NO.	OCD A	P	DESCRIPTION	MISC	HWH	HVAC	REC	LTG	A	B	C	MISC	HWH	HVAC	REC	LTG	DESCRIPTION	OCD A	P	CKT NO.
1	20	1	REC- MDF RM 120C				0.7		1.6					0.9			AC-1-7 MDF 120C	20	2	2
3	20	2	AC-1-6 MDF 120C			0.9				1.8				0.9			/	/	/	4
5	/	/	/			0.9					2.6			1.7			EH-1 MDF 120C	20	2	6
7	20	1	SPARE						1.7					1.7			/	/	/	8
9	20	1	SPARE							0.0							SPARE	20	1	10
11	20	1	SPARE								0.0						SPARE	20	1	12
13	20	1	SPARE						0.0								SPARE	20	1	14
15	20	1	SPARE							0.0							SPARE	20	1	16
17	20	1	SPARE								0.0						SPARE	20	1	18
19	20	1	SPARE						0.0								SPARE	20	1	20
21	20	1	SPARE							0.0							SPARE	20	1	22
23	20	1	SPARE								0.0						SPARE	20	1	24
25	20	1	SPARE						0.0								SPARE	20	1	26
27	20	1	SPARE							0.0							SPARE	20	1	28
29	20	1	SPARE								0.0						SPARE	20	1	30
31			SPACE ONLY						0.0								SPACE ONLY			32
33			SPACE ONLY							0.0							SPACE ONLY			34
35			SPACE ONLY								0.0						SPACE ONLY			36
37			SPACE ONLY						0.0								SPACE ONLY			38
39			SPACE ONLY							0.0							SPACE ONLY			40
41			SPACE ONLY								0.0						SPACE ONLY			42
CONNECTED LOAD (KVA)				0.0	0.0	1.8	0.7	0.0	3.3	1.8	2.6	0.0	0.0	5.2	0.0	0.0				
25% OF LARGEST MOTOR (KVA)																				
TOTAL CONNECTED LOAD (KVA)				0.0	0.0	7.0	0.7	0.0												
DEMAND FACTOR				1.0	1.25	1.0	X	1.25									TOTAL DEMAND (KVA)	8		
TOTAL DEMAND LOAD (KVA)				0.0	0.0	7.0	0.7	0.0									LINE CURRENT (AMPS)	21		

X= 1ST 10KVA @ 100%, + REMAINDER @ 50% (N.E.C. 220-44) — HWH - HOT WATER HEATER

PANEL EHL

PROJECT: OFFICE OF GENERAL SERVICES — PANEL VOLTAGE: 120/208V — AIC RATING: 42K
PANEL: EHL — PHASE & WIRE: 3PH, 4W — MOUNTING: SURFACE
LOCATION FIRST FLOOR- EMERGENCY ELECTRICAL ROOM 119A — BUS/MAIN (AMPS): 800A MCB — NEMA TYPE: 1

CKT NO.	OCD A	P	DESCRIPTION	MISC	HWH	HVAC	REC	LTG	A	B	C	MISC	HWH	HVAC	REC	LTG	DESCRIPTION	OCD A	P	CKT NO.
1	20	1	WP GFI REC- ELEV. A 07				0.6		1.6			1.0					ELEV 7 FAN & CAB LIGHTS RM 401	20	1	2
3	20	1	WP GFI REC- ELEV. B 08				0.6			1.6		1.0					ELEV 8 FAN & CAB LIGHTS RM 401	20	1	4
5	20	1	WP GFI REC- ELEV. 07A				0.6				1.6	1.0					ELEV 7A FAN & CAB LIGHTS	20	1	6
7	50	2	AC-1-5 EMER ELEC 119A			1.8			2.1			0.3					JBOX- REMOTE PANEL ELEC 119A	20	1	8
9	/	/	/			1.8				2.1					0.3		REC- ELEV MACHINE RM 401	20	1	10
11	20	1	SPARE								3.6	3.6					EMC- GENERATOR	60	3	12
13	20	1	SPARE						3.6			3.6					/	/	/	14
15	20	1	SPARE							3.6		3.6					/	/	/	16
17	20	1	SPARE								0.0						SPARE	20	1	18
19	400	3	PANEL EHLP	0.1	0.0	25.4	0.1	0.0	25.6								SPARE	125	3	20
21	/	/	/	0.1	0.0	25.4	0.1	0.0		25.6							/	/	/	22
23	/	/	/	0.1	0.0	25.4	0.1	0.0			25.6						/	/	/	24
25	125	3	PANEL EL1W	0.5	0.0	2.9	10.7	0.0	29.3			0.1	0.0	3.2	11.9	0.0	PANEL EL1E	125	3	26
27	/	/	/	0.5	0.0	2.9	10.7	0.0		29.3		0.1	0.0	3.2	11.9	0.0	/	/	/	28
29	/	/	/	0.5	0.0	2.9	10.7	0.0			29.3	0.1	0.0	3.2	11.9	0.0	/	/	/	30
31	125	3	PANEL EL3W	0.1	0.0	0.0	30.9	0.0	54.8			0.0	0.0	2.8	21.0	0.0	PANEL EL3E	225	3	32
33	/	/	/	0.1	0.0	0.0	30.9	0.0		54.8		0.0	0.0	2.8	21.0	0.0	/	/	/	34
35	/	/	/	0.1	0.0	0.0	30.9	0.0			54.8	0.0	0.0	2.8	21.0	0.0	/	/	/	36
37	100	3	PANEL EMDF	0.0	0.0	2.3	0.2	0.0	2.7			0.1					TVSS	30	3	38
39	/	/	/	0.0	0.0	2.3	0.2	0.0		2.7		0.1					/	/	/	40
41	/	/	/	0.0	0.0	2.3	0.2	0.0			2.7	0.1					/	/	/	42
CONNECTED LOAD (KVA)				2.1	0.0	95.6	127.7	0.0	119.7	119.7	117.6	14.7	0.0	18.0	99.0	0.0				
25% OF LARGEST MOTOR (KVA)																				
TOTAL CONNECTED LOAD (KVA)				16.8	0.0	113.5	226.7	0.0												
DEMAND FACTOR				1.0	1.25	1.0	X	1.25									TOTAL DEMAND (KVA)	249		
TOTAL DEMAND LOAD (KVA)				16.8	0.0	113.5	118.4	0.0									LINE CURRENT (AMPS)	690		

X= 1ST 10KVA @ 100%, + REMAINDER @ 50% (N.E.C. 220-44) — HWH - HOT WATER HEATER

PANEL M1W

PROJECT: OFFICE OF GENERAL SERVICES — PANEL VOLTAGE: 120/208V — AIC RATING: 22K
PANEL: M1W — PHASE & WIRE: 3PH, 4W — MOUNTING: SURFACE
LOCATION FIRST FLOOR- ELECTRICAL ROOM 115 — BUS/MAIN (AMPS): 100A MLO — NEMA TYPE: 1

CKT NO.	OCD A	P	DESCRIPTION	MISC	HWH	HVAC	REC	LTG	A	B	C	MISC	HWH	HVAC	REC	LTG	DESCRIPTION	OCD A	P	CKT NO.
1	20	1	CUH-5A & 5B VEST.A 148			0.1			2.8					2.7			AHU-4 ELEC 119	50	3	2
3	30	2	EH-2 LOBBY 100			2.0				4.7				2.7			/	/	/	4
5	/	/	/			2.0					4.7			2.7			/	/	/	6
7	20	1	CUH-7 OGS CLEANER RM 120B			0.1			0.1					0.0			CP-1 ELEC 119	20	1	8
9	20	1	SPARE							0.1				0.1			CUH-6 ELEC 119	20	1	10
11	20	1	JBOX- VAV FIRST FLOOR			0.3					0.5				0.2		J-BOX MOTORIZED DAMPER	20	1	12
13	20	1	JBOX- VAV SECOND FLOOR			1.0			2.7					1.7			EH-4 ELEC 119	20	2	14
15	30	2	EH-3 LOBBY 100			2.0				3.7				1.7			/	/	/	16
17	/	/	/			2.0					2.6			0.6			FCU-2 CORRIDOR	20	3	18
19	20	3	FCU-1 TRAINING RM 133			0.6			1.1					0.6			/	/	/	20
21	/	/	/			0.6				1.1				0.6			/	/	/	22
23	/	/	/			0.6					0.6						SPARE	20	1	24
25	20	1	SPARE						0.0								SPARE	20	1	26
27	20	1	SPARE							0.0							SPARE	20	1	28
29	20	1	SPARE								0.0						SPARE	20	1	30
31	20	1	SPARE						0.0								SPARE	20	1	32
33	20	1	SPARE							0.0							SPARE	20	1	34
35	20	1	SPARE								0.0						SPARE	20	1	36
37			SPACE ONLY						0.0								SPACE ONLY			38
39			SPACE ONLY							0.0							SPACE ONLY			40
41			SPACE ONLY								0.0						SPACE ONLY			42
CONNECTED LOAD (KVA)				0.0	0.0	11.1	0.0	0.0	6.7	9.6	8.3	0.0	0.0	13.2	0.2	0.0				
25% OF LARGEST MOTOR (KVA)																				
TOTAL CONNECTED LOAD (KVA)				0.0	0.0	24.3	0.2	0.0												
DEMAND FACTOR				1.0	1.25	1.0	X	1.25									TOTAL DEMAND (KVA)	24		
TOTAL DEMAND LOAD (KVA)				0.0	0.0	24.3	0.2	0.0									LINE CURRENT (AMPS)	68		

X= 1ST 10KVA @ 100%, + REMAINDER @ 50% (N.E.C. 220-44) — HWH - HOT WATER HEATER

DEMAND LOAD SUMMARY

		CONNECTED LOAD	DEMAND FACTOR	DEMAND LOAD
LIGHTING	=	74.9 KVA	X 1.25	= 93.6 KVA
POWER	=	FIRST 10 KVA REMAINING 740.5 KVA	X 1.00 X 0.5	= 10 KVA = 370.3 KVA
ELEVATOR	=	57.3 KVA	X 0.9	= 51.5 KVA
MISCELLANEOUS	=	120.9 KVA	X 1.00	=120.9 KVA
HVAC				= 644.0 KVA
• HEATING LOAD • COOLING LOAD	= =	317.5 KVA 644.0 KVA	X 1.00 X 1.00	
PLUMBING	=	10.3 KVA	X 1.00	= 10.3 KVA
TOTAL DEMAND LOAD				= 1300.6 KVA

KEY PANELS

MAIN SWITCH GEAR	PANEL 'MDP'	PANEL 'MG'
PANEL 'EM'	PANEL 'EH'	PANEL 'EMDF'
PANEL 'EHL'	PANEL 'M1W'	

GENERAL NOTES

1. TURN ALL SPARE CIRCUIT BREAKERS TO "OFF" POSITION AT COMPLETION OF WORK.
2. PROVIDE TYPED SCHEDULE FOR PANEL BOARDS UTILIZED AT COMPLETION OF PROJECT INDICATING ACTUAL AS-BUILT CONDITIONS.
3. ALL THE UNGROUNDED AND GROUNDED CONDUCTORS OF EACH MULTIWIRE BRANCH CIRCUIT SHALL BE GROUPED BY WIRE TIES OR SIMILAR MEANS IN AT LEAST ONE LOCATION WITHIN THE PANELBOARD OR OTHER POINT OF ORIGINATION.
4. PROVIDE ARC FLASH WARNING LABELS FOR ALL NEW PANEL BOARDS AND SWITCHGEAR IN ACCORDANCE WITH NEC REQUIREMENTS.

REVISED DRAWING
09/15/16

NEW YORK STATE OF OPPORTUNITY. | Office of General Services

DESIGN & CONSTRUCTION

CONSULTANT

STV 100 Years

225 Park Avenue South
New York, NY 10003
t 212.777.4400 f 212.529.5237
www.stvinc.com

SETTY

WARNING:
THE ALTERATION OF THIS MATERIAL IN ANY WAY, UNLESS DONE UNDER THE DIRECTION OF A COMPARABLE PROFESSIONAL, I.E. ARCHITECT FOR AN ARCHITECT, ENGINEER FOR AN ENGINEER, OR LANDSCAPE ARCHITECT FOR A LANDSCAPE ARCHITECT, IS A VIOLATION OF THE NEW YORK STATE EDUCATION LAW AND/OR REGULATIONS AND IS A CLASS 'A' MISDEMEANOR.

N

STATE OF NEW YORK — CONRAD D DELA CRUZ — LICENSED PROFESSIONAL ENGINEER — 089769 — 09/15/2016

CONTRACT: ELECTRICAL

TITLE: ABATE HAZARDOUS MATERIALS & RENOVATE BUILDING 4

LOCATION: STATE OFFICE BUILDING CAMPUS, 1220 WASHINGTON AVE., ALBANY, NY 12226

CLIENT: OFFICE OF GENERAL SERVICES

KEY PLAN:

MARK	DATE	DESCRIPTION
1 (triangle)	09/15/16	ADDENDUM No. 1
3	07/11/16	BID DOCUMENTS
2	06/10/16	FINAL COMPLIANCE
1	03/21/16	FINAL FOR REVIEW

PROJECT NUMBER: 45124 - E
DESIGNED BY: VL/SM
DRAWN BY: DAT
FIELD CHECK: CD
APPROVED: CD
SCALE: NOT TO SCALE

SHEET TITLE: ELECTRICAL PANEL SCHEDULES

DRAWING NUMBER: E-602

SHEET 45 OF 56

10/2/2015 9:37:52 AM
36x24 PLOT SHEET

PROJECT: OFFICE OF GENERAL SERVICES — PANEL: L1E (SECTION 1) — LOCATION: FIRST FLOOR- ELECTRICAL ROOM 129
PANEL VOLTAGE: 120/208V — PHASE & WIRE: 3PH, 4W — BUS/MAIN (AMPS): 250A MCB
AIC RATING: 22K — MOUNTING: SURFACE — NEMA TYPE: 1

CKT NO.	OCD A	OCD P	DESCRIPTION	LOAD (KVA) MISC	HWH	HVAC	REC	LTG	3 PH SEQUENCE A	B	C	LOAD (KVA) MISC	HWH	HVAC	REC	LTG	DESCRIPTION	OCD A	OCD P	CKT NO.
1	20	1	JBOX- TRAINING RM 133				0.7		1.4						0.7		JBOX- TRAINING RM 133	20	1	2
3	20	1	JBOX- TRAINING RM 133				0.7			1.4					0.7		JBOX- TRAINING RM 133	20	1	4
5	20	1	JBOX- TRAINING RM 133				0.7				1.4				0.7		JBOX- TRAINING RM 133	20	1	6
7	20	1	JBOX- TRAINING RM 133				0.7		1.4						0.7		JBOX- TRAINING RM 133	20	1	8
9	20	1	SPARE							1.7					1.7		REC- X-RAY MACHINE MAIL RM 126	20	2	10
11	20	1	REC- TBD 121, TRAINING RM 133				1.1				2.8				1.7		/	/	/	12
13	20	1	SPARE						1.7						1.7		REC- POSTAGE MACHINE MAIL RM 126	20	2	14
15	20	1	SPARE							1.7					1.7		/	/	/	16
17	20	1	GFI REC- RM 124, JC 130				0.4				0.9				0.5		REC- MECH/PLUMBING 122	20	1	18
19	20	1	GFI REC- MEN'S 128, WOMEN'S 132				0.8		1.5						0.7		GFI REC- RM 122, 122A	20	1	20
21	20	1	SPARE							0.9					0.9		REC- CORRIDOR 143	20	1	22
23	20	1	JBOX- TOWEL & SOAP DISPENSER RM 134				0.2				1.3				1.1		REC- CBVH STORAGE 125, MAIL RM 126	20	1	24
25	20	1	SPARE						0.7						0.7		REC- MAIL RM 126	20	1	26
27	20	1	SPARE							0.7					0.7		REC- MAIL RM 126	20	1	28
29	20	1	SPARE								0.0						SPARE	20	1	30
31	20	1	SPARE						0.0								SPARE	20	1	32
33	20	1	SPARE							0.0							SPARE	20	1	34
35	20	1	SPARE								0.0						SPARE	20	1	36
37	100	3	PANEL M1E	1.5	0.0	6.5	0.7	0.0	8.7			0.1					TVSS	30	3	38
39	/	/	/	1.5	0.0	6.5	0.7	0.0		8.7		0.1					/	/	/	40
41	/	/	/	1.5	0.0	6.5	0.7	0.0			8.7	0.1					/	/	/	42
CONNECTED LOAD (KVA)				4.5	0.0	19.5	7.3	0.0	15.6	15.2	15.1	0.3	0.0	0.0	14.4	0.0				
TOTAL CONNECTED LOAD (SECTION 1)				4.8	0.0	19.5	21.7	0.0												
TOTAL CONNECTED LOAD (SECTION 2)				0.0	0.0	0.0	22.9	0.0												
TOTAL CONNECTED LOAD (SECTION 3)				0.0	0.0	0.0	23.0	0.0												
TOTAL CONNECTED LOAD (SECTION 4)				0.0	0.0	0.0	14.9	0.0												
25% OF LARGEST MOTOR (KVA)																				
TOTAL CONNECTED LOAD (KVA)				4.8	0.0	19.5	82.5	0.0												
DEMAND FACTOR				1.0	1.25	1.0	X	1.25									TOTAL DEMAND (KVA)	70		
TOTAL DEMAND LOAD (KVA)				4.8	0.0	19.5	46.2	0.0									LINE CURRENT (AMPS)	196		

X= 1ST 10KVA @ 100%, + REMAINDER @ 50% (N.E.C. 220-44)
HWH - HOT WATER HEATER

PROJECT: OFFICE OF GENERAL SERVICES — PANEL: L1E (SECTION 2) — LOCATION: FIRST FLOOR- ELECTRICAL ROOM 129
PANEL VOLTAGE: 120/208V — PHASE & WIRE: 3PH, 4W — BUS/MAIN (AMPS): 400A MLO
AIC RATING: 22K — MOUNTING: SURFACE — NEMA TYPE: 1

CKT NO.	OCD A	OCD P	DESCRIPTION	LOAD (KVA) MISC	HWH	HVAC	REC	LTG	3 PH SEQUENCE A	B	C	LOAD (KVA) MISC	HWH	HVAC	REC	LTG	DESCRIPTION	OCD A	OCD P	CKT NO.
43	20	1	JBOX- SYS FURN SPEC INVEST 139				0.7		1.4						0.7		JBOX- SYS FURN SPEC INVEST 139	20	1	44
45	20	1	JBOX- SYS FURN SPEC INVEST 139				0.7			1.4					0.7		JBOX- SYS FURN SPEC INVEST 139	20	1	46
47	20	1	JBOX- SYS FURN SPEC INVEST 139				0.7				1.4				0.7		JBOX- SYS FURN SPEC INVEST 139	20	1	48
49	20	1	JBOX- SYS FURN SPEC INVEST 139				0.7		1.4						0.7		JBOX- SYS FURN SPEC INVEST 139	20	1	50
51	20	1	JBOX- SYS FURN SPEC INVEST 139				0.7			1.4					0.7		JBOX- SYS FURN SPEC INVEST 139	20	1	52
53	20	1	JBOX- SYS FURN SPEC INVEST 139				0.4				1.1				0.7		JBOX- SYS FURN SPEC INVEST 139	20	1	54
55	20	1	JBOX- SYS FURN SPEC INVEST 139				0.7		1.4						0.7		JBOX- SYS FURN SPEC INVEST 139	20	1	56
57	20	1	JBOX- SYS FURN SPEC INVEST 139				0.7			1.4					0.7		JBOX- SYS FURN SPEC INVEST 139	20	1	58
59	20	1	JBOX- SYS FURN SPEC INVEST 139				0.7				1.4				0.7		JBOX- SYS FURN SPEC INVEST 139	20	1	60
61	20	1	JBOX- SYS FURN SPEC INVEST 139				0.4		0.7						0.4		JBOX- SYS FURN SPEC INVEST 139	20	1	62
63	20	1	JBOX- SYS FURN SPEC INVEST 139				0.7			1.4					0.7		JBOX- SYS FURN SPEC INVEST 139	20	1	64
65	20	1	JBOX- SYS FURN SPEC INVEST 139				0.7				1.4				0.7		JBOX- SYS FURN SPEC INVEST 139	20	1	66
67	20	1	JBOX- SYS FURN SPEC INVEST 139				0.7		1.4						0.7		JBOX- SYS FURN SPEC INVEST 139	20	1	68
69	20	1	JBOX- SYS FURN SPEC INVEST 139				0.4			1.4					1.1		REC- CORRIDOR 140, 142, VEST.C 140A	20	1	70
71	20	1	REC- UTILITIES MGT 127				0.7				0.9				0.2		REC- COPY 139A	20	1	72
73	20	1	REC- SPEC INVEST 139				0.4		0.7						0.4		REC- COPY 139A	20	1	74
75	20	1	REC- SPEC INVEST 139				0.4			0.5					0.2		REC- COPY 139A	20	1	76
77	20	1	REC - RM 139, 139A				0.9				1.6				0.7		REC- RM 137,139	20	1	78
79	20	1	SPARE						0.0								SPARE	20	1	80
81	20	1	SPARE							0.0							SPARE	20	1	82
83	20	1	SPARE								0.0						SPARE	20	1	84
CONNECTED LOAD (KVA)				0.0	0.0	0.0	11.3	0.0	7.2	7.7	7.9	0.0	0.0	0.0	11.5	0.0				
25% OF LARGEST MOTOR (KVA)																				
TOTAL CONNECTED LOAD (KVA)				0.0	0.0	0.0	22.9	0.0												
DEMAND FACTOR				1.0	1.25	1.0	X	1.25									TOTAL DEMAND (KVA)	16		
TOTAL DEMAND LOAD (KVA)				0.0	0.0	0.0	16.4	0.0									LINE CURRENT (AMPS)	46		

X= 1ST 10KVA @ 100%, + REMAINDER @ 50% (N.E.C. 220-44)
HWH - HOT WATER HEATER

PROJECT: OFFICE OF GENERAL SERVICES — PANEL: L1E (SECTION 3) — LOCATION: FIRST FLOOR- ELECTRICAL ROOM 129
PANEL VOLTAGE: 120/208V — PHASE & WIRE: 3PH, 4W — BUS/MAIN (AMPS): 400A MLO
AIC RATING: 22K — MOUNTING: SURFACE — NEMA TYPE: 1

CKT NO.	OCD A	OCD P	DESCRIPTION	LOAD (KVA) MISC	HWH	HVAC	REC	LTG	3 PH SEQUENCE A	B	C	LOAD (KVA) MISC	HWH	HVAC	REC	LTG	DESCRIPTION	OCD A	OCD P	CKT NO.
85	20	1	JBOX- SYS FURN RM 136				0.7		1.4						0.7		JBOX- SYS FURN RM 136	20	1	86
87	20	1	JBOX- SYS FURN RM 136				0.7			1.4					0.7		JBOX- SYS FURN RM 136	20	1	88
89	20	1	JBOX- SYS FURN RM 136				0.7				1.4				0.7		JBOX- SYS FURN RM 136	20	1	90
91	20	1	JBOX- SYS FURN RM 136				0.7		1.1						0.4		JBOX- SYS FURN RM 136	20	1	92
93	20	1	JBOX- SYS FURN RM 136				0.4			1.1					0.7		JBOX- SYS FURN RM 136	20	1	94
95	20	1	JBOX- SYS FURN RM 136				0.7				1.4				0.7		JBOX- SYS FURN RM 136	20	1	96
97	20	1	JBOX- SYS FURN RM 136				0.7		1.4						0.7		JBOX- SYS FURN RM 136	20	1	98
99	20	1	JBOX- SYS FURN RM 136				0.7			1.4					0.7		JBOX- SYS FURN RM 136	20	1	100
101	20	1	JBOX- SYS FURN RM 136				0.7				1.4				0.7		JBOX- SYS FURN RM 136	20	1	102
103	20	1	JBOX- SYS FURN RM 136				0.4		1.1						0.7		JBOX- SYS FURN RM 136	20	1	104
105	20	1	REC- SPECIAL INVESTIGATIONS 139				1.1			1.8					0.7		JBOX- SYS FURN RM 136	20	1	106
107	20	1	REC- SPECIAL INVESTIGATIONS 139				0.7				1.4				0.7		JBOX- SYS FURN RM 136	20	1	108
109	20	1	REC- SPECIAL INVESTIGATIONS 139				0.7		1.1						0.4		JBOX- SYS FURN RM 136	20	1	110
111	20	1	REC- ENCLAVE 139B				0.4			1.6					1.2		REC- REF BREAK RM 134	20	1	112
113	20	1	REC- CORRIDOR 140				0.4				0.5				0.2		GFI REC- BREAK RM 134	20	1	114
115	20	1	REC- BREAK RM 134, ELEC 129				0.9		2.0						1.1		REC- SECURE FILE RM 135, COPY RM 136A	20	1	116
117	20	1	JBOX- EWC CORRIDOR 140 [1]				0.6			0.8					0.2		REC- COPY RM 136A	20	1	118
119	20	1	REC- COPY RM 136A				0.2				0.5				0.4		REC- COPY RM 136A	20	1	120
121	20	1	SPARE						0.0								SPARE	20	1	122
123	20	1	SPARE							0.0							SPARE	20	1	124
125	20	1	SPARE								0.0						SPARE	20	1	126
CONNECTED LOAD (KVA)				0.0	0.0	0.0	11.4	0.0	8.1	8.1	6.8	0.0	0.0	0.0	11.6	0.0				
25% OF LARGEST MOTOR (KVA)																				
TOTAL CONNECTED LOAD (KVA)				0.0	0.0	0.0	23.0	0.0												
DEMAND FACTOR				1.0	1.25	1.0	X	1.25									TOTAL DEMAND (KVA)	17		
TOTAL DEMAND LOAD (KVA)				0.0	0.0	0.0	16.5	0.0									LINE CURRENT (AMPS)	46		

X= 1ST 10KVA @ 100%, + REMAINDER @ 50% (N.E.C. 220-44)
HWH - HOT WATER HEATER
[1] PROVIDE GFI CIRCUIT BREAKER

PROJECT: OFFICE OF GENERAL SERVICES — PANEL: L1E (SECTION 4) — LOCATION: FIRST FLOOR- ELECTRICAL ROOM 129
PANEL VOLTAGE: 120/208V — PHASE & WIRE: 3PH, 4W — BUS/MAIN (AMPS): 400A MLO
AIC RATING: 22K — MOUNTING: SURFACE — NEMA TYPE: 1

CKT NO.	OCD A	OCD P	DESCRIPTION	LOAD (KVA) MISC	HWH	HVAC	REC	LTG	3 PH SEQUENCE A	B	C	LOAD (KVA) MISC	HWH	HVAC	REC	LTG	DESCRIPTION	OCD A	OCD P	CKT NO.
127	20	1	JBOX- EWC CORRIDOR 143 [1]				0.6		1.7						1.1		REC- RM 127, 127A, 127B	20	1	128
129	20	1	REC- INTERSTATE/LABOR RELATIONS 136				0.7			1.4					0.7		REC- INTERSTATE/LABOR RELATIONS 136	20	1	130
131	20	1	REC- INTERSTATE/LABOR RELATIONS 136				0.7				1.4				0.7		REC- INTERSTATE/LABOR RELATIONS 136	20	1	132
133	20	1	REC- EVIDENCE RM 138, COPY 139A				1.2		2.3						1.1		REC- SPECIAL INVESTIGATIONS 139	20	1	134
135	20	1	REC- INTERSTATE/LABOR RELATIONS 136				1.3			2.3					1.1		REC- INTERSTATE/LABOR RELATIONS 136	20	1	136
137	20	1	REC- INTERSTATE/LABOR RELATIONS 136				0.7				1.4				0.7		REC- RM 136, ENCLAVE 136B	20	1	138
139	20	1	GFI REC- BREAK RM 134				0.4		0.7						0.4		REC- COPY RM 136A	20	1	140
141	20	1	JBOX- FLUSHOMETER RM 128, 132				0.1			0.5					0.4		REC- COPY 139A	20	1	142
143	20	1	SPARE								0.2				0.2		JBOX- TRAP PRIMER	20	1	144
145	20	1	JBOX- FAUCETS RM 128. 132				0.5		1.1						0.6		JBOX- DISPENSERS MEN/WOMENS RM	20	1	146
147	20	1	JBOX- HAND DRYER MEN'S 128				0.5			0.5							SPARE	20	1	148
149	20	1	JBOX- HAND DRYER WOMEN'S 132				0.5				0.5						SPARE	20	1	150
151	20	1	JBOX- SMOKE DAMPER CBVH STORE				0.4		0.4								SPARE	20	1	152
153	20	1	JBOX- SMOKE DAMPER FIRST FLOOR				0.4			0.4							SPARE	20	1	154
155	20	1	SPARE								0.0						SPARE	20	1	156
157	20	1	SPARE						0.0								SPARE	20	1	158
159	20	1	SPARE							0.0							SPARE	20	1	160
161	20	1	SPARE								0.0						SPARE	20	1	162
163			SPACE ONLY						0.0								SPACE ONLY			164
165			SPACE ONLY							0.0							SPACE ONLY			166
167			SPACE ONLY								0.0						SPACE ONLY			168
CONNECTED LOAD (KVA)				0.0	0.0	0.0	8.0	0.0	6.2	5.1	3.6	0.0	0.0	0.0	6.9	0.0				
25% OF LARGEST MOTOR (KVA)																				
TOTAL CONNECTED LOAD (KVA)				0.0	0.0	0.0	14.9	0.0												
DEMAND FACTOR				1.0	1.25	1.0	X	1.25									TOTAL DEMAND (KVA)	12		
TOTAL DEMAND LOAD (KVA)				0.0	0.0	0.0	12.5	0.0									LINE CURRENT (AMPS)	35		

X= 1ST 10KVA @ 100%, + REMAINDER @ 50% (N.E.C. 220-44)
HWH - HOT WATER HEATER
[1] PROVIDE GFI CIRCUIT BREAKER

PROJECT: OFFICE OF GENERAL SERVICES — PANEL: H1E — LOCATION: FIRST FLOOR- ELECTRICAL ROOM 129
PANEL VOLTAGE: 480/277V — PHASE & WIRE: 3PH, 4W — BUS/MAIN (AMPS): 50A MCB
AIC RATING: 42K — MOUNTING: SURFACE — NEMA TYPE: 1

CKT NO.	OCD A	OCD P	DESCRIPTION	LOAD (KVA) MISC	HWH	HVAC	REC	LTG	3 PH SEQUENCE A	B	C	LOAD (KVA) MISC	HWH	HVAC	REC	LTG	DESCRIPTION	OCD A	OCD P	CKT NO.
1	20	1	LTG- SPECIAL INVESTIGATION 139, 139B					2.1	4.4							2.3	LTG- RM 122, 126, 127, 127A,B, 137-139A	20	1	2
3	20	1	LTG- INTERSTATE LABOR 136, 136B					1.9		3.2						1.3	LTG- RM 133, 134, 135, 128, 132, 124, 123A	20	1	4
5	20	1	LTG- CORRIDOR 140,141, 142, 143					1.7			2.1					0.4	LTG- EXTERIOR	20	1	6
7	20	1	SPARE						0.0								SPARE	20	1	8
9	20	1	SPARE							0.0							SPARE	20	1	10
11	20	1	SPARE								0.0						SPARE	20	1	12
13	20	1	SPARE						0.0								SPARE	20	1	14
15	20	1	SPARE							0.0							SPARE	20	1	16
17	20	1	SPARE								0.0						SPARE	20	1	18
19	20	1	SPARE						0.0								SPARE	20	1	20
21	20	1	SPARE							0.0							SPARE	20	1	22
23	20	1	SPARE								0.0						SPARE	20	1	24
25	20	1	SPARE						0.0								SPARE	20	1	26
27	20	1	SPARE							0.0							SPARE	20	1	28
29	20	1	SPARE								0.0						SPARE	20	1	30
31			SPACE ONLY						0.0								SPACE ONLY			32
33			SPACE ONLY							0.0							SPACE ONLY			34
35			SPACE ONLY								0.0						SPACE ONLY			36
37			SPACE ONLY						0.1			0.1					TVSS	30	3	38
39			SPACE ONLY							0.1		0.1					/	/	/	40
41			SPACE ONLY								0.1	0.1					/	/	/	42
CONNECTED LOAD (KVA)				0.0	0.0	0.0	0.0	5.7	4.5	3.3	2.2	0.3	0.0	0.0	0.0	4.0				
25% OF LARGEST MOTOR (KVA)																				
TOTAL CONNECTED LOAD (KVA)				0.3	0.0	0.0	0.0	9.7												
DEMAND FACTOR				1.0	1.25	1.0	X	1.25									TOTAL DEMAND (KVA)	12		
TOTAL DEMAND LOAD (KVA)				0.3	0.0	0.0	0.0	12.1									LINE CURRENT (AMPS)	15		

X= 1ST 10KVA @ 100%, + REMAINDER @ 50% (N.E.C. 220-44)

PROJECT: OFFICE OF GENERAL SERVICES — PANEL: EL1E — LOCATION: FIRST FLOOR- ELECTRICAL ROOM 129
PANEL VOLTAGE: 120/208V — PHASE & WIRE: 3PH, 4W — BUS/MAIN (AMPS): 125A MCB
AIC RATING: 22K — MOUNTING: SURFACE — NEMA TYPE: 1

CKT NO.	OCD A	OCD P	DESCRIPTION	LOAD (KVA) MISC	HWH	HVAC	REC	LTG	3 PH SEQUENCE A	B	C	LOAD (KVA) MISC	HWH	HVAC	REC	LTG	DESCRIPTION	OCD A	OCD P	CKT NO.
1	20	2	AC-1-4 TELECOM 131			0.9			1.7						0.8		REC- TELECOM RM 131	20	1	2
3	/	/	/			0.9				1.7					0.8		REC- TELECOM RM 131	20	1	4
5	50	2	SPL REC- EQUIPMENT REACK RM 131				3.4				4.2				0.8		REC- TELECOM RM 131	20	1	6
7	/	/	/				3.4		4.2						0.8		REC- TELECOM RM 218	20	1	8
9	50	2	SPL REC- EQUIPMENT REACK RM 131				3.4			4.2					0.8		REC- TELECOM RM 218	20	1	10
11	/	/	/				3.4				4.2				0.8		REC- TELECOM RM 218	20	1	12
13	20	2	AC-2-4 TELECOM 218			0.9			1.8					0.9			AC-1-3 ELEC 129	20	2	14
15	/	/	/			0.9				1.8				0.9			/	/	/	16
17	50	2	SPL REC- EQUIPMENT REACK RM 218				3.4				4.3			0.9			AC-2-3 ELEC 216	20	2	18
19	/	/	/				3.4		4.3					0.9			/	/	/	20
21	50	2	SPL REC- EQUIPMENT REACK RM 218				3.4			3.7		0.3					JBOX- BMS PANEL ROOM 122	20	1	22
23	/	/	/				3.4				4.4				1.0		JBOX SECURITY CAMERA FIRST FLOOR	20	1	24
25	20	1	JBOX CARD READER FIRST FLOOR				1.0		2.0						1.0		JBOX SECURITY CAMERA SECOND FLOOR	20	1	26
27	20	1	JBOX DOOR OPERATORS 140A				0.3			1.5				1.2			GFU-1 MECH/PLUMBING 122	20	1	28
29	20	1	JBOX CARD READER SECOND FLOOR				0.4				1.6			1.2			GFU-2 MECH/PLUMBING 122	20	1	30
31	20	1	SPARE						0.0								SPARE	20	1	32
33	20	1	SPARE							0.0							SPARE	20	1	34
35	20	1	SPARE								0.0						SPARE	20	1	36
37	20	1	SPARE						0.0								SPARE	20	1	38
39	20	1	SPARE							0.0							SPARE	20	1	40
41	20	1	SPARE								0.0						SPARE	20	1	42
CONNECTED LOAD (KVA)				0.0	0.0	3.6	28.9	0.0	14.0	12.9	18.7	0.3	0.0	6.0	6.8	0.0				
25% OF LARGEST MOTOR (KVA)																				
TOTAL CONNECTED LOAD (KVA)				0.3	0.0	9.6	35.7	0.0												
DEMAND FACTOR				1.0	1.25	1.0	X	1.25									TOTAL DEMAND (KVA)	33		
TOTAL DEMAND LOAD (KVA)				0.3	0.0	9.6	22.9	0.0									LINE CURRENT (AMPS)	91		

X= 1ST 10KVA @ 100%, + REMAINDER @ 50% (N.E.C. 220-44)
HWH - HOT WATER HEATER

PROJECT: OFFICE OF GENERAL SERVICES — PANEL: EL — LOCATION: FIRST FLOOR- EMERGENCY ELECTRICAL ROOM
PANEL VOLTAGE: 120/208V — PHASE & WIRE: 3PH, 4W — BUS/MAIN (AMPS): 150A MCB
AIC RATING: 22K — MOUNTING: SURFACE — NEMA TYPE: 1

CKT NO.	OCD A	OCD P	DESCRIPTION	LOAD (KVA) MISC	HWH	HVAC	REC	LTG	3 PH SEQUENCE A	B	C	LOAD (KVA) MISC	HWH	HVAC	REC	LTG	DESCRIPTION	OCD A	OCD P	CKT NO.
1	20	1	FACP- EMERGENCY ELEC 119A	1.0					2.0			1.0					FATC- ELECTRICAL ROOM 209	20	1	2
3	20	1	FATC- ELECTRICAL ROOM 129	1.0						2.0		1.0					FATC- ELECTRICAL ROOM 216	20	1	4
5	20	1	FATC- ELECTRICAL ROOM 311	1.0							1.5	0.5					SP-1 ELEV B 08	20	3	6
7	20	1	FATC- ELECTRICAL ROOM 320	1.0					1.5			0.5					/	/	/	8
9	20	1	SPARE							0.5		0.5					/	/	/	10
11	20	1	SPARE								0.5	0.5					SP-2 ELEV 07A	20	3	12
13	20	1	SPARE						0.5			0.5					/	/	/	14
15	20	1	SPARE							0.5		0.5					/	/	/	16
17	20	1	SPARE								0.0						SPARE	20	1	18
19	20	1	SPARE						0.0								SPARE	20	1	20
21	20	1	SPARE							0.0							SPARE	20	1	22
23	20	1	SPARE								0.0						SPARE	20	1	24
25	20	1	SPARE						0.0								SPARE	20	1	26
27	20	1	SPARE							0.0							SPARE	20	1	28
29	20	1	SPARE								0.0						SPARE	20	1	30
31			SPACE ONLY						0.0								SPACE ONLY			32
33			SPACE ONLY							0.0							SPACE ONLY			34
35			SPACE ONLY								0.0						SPACE ONLY			36
37			SPACE ONLY						0.1			0.1					TVSS	30	3	38
39			SPACE ONLY							0.1		0.1					/	/	/	40
41			SPACE ONLY								0.1	0.1					/	/	/	42
CONNECTED LOAD (KVA)				4.0	0.0	0.0	0.0	0.0	4.1	3.1	2.1	5.3	0.0	0.0	0.0	0.0				
25% OF LARGEST MOTOR (KVA)																				
TOTAL CONNECTED LOAD (KVA)				9.3	0.0	0.0	0.0	0.0												
DEMAND FACTOR				1.0	1.25	1.0	X	1.25									TOTAL DEMAND (KVA)	9		
TOTAL DEMAND LOAD (KVA)				9.3	0.0	0.0	0.0	0.0									LINE CURRENT (AMPS)	26		

X= 1ST 10KVA @ 100%, + REMAINDER @ 50% (N.E.C. 220-44)
HWH - HOT WATER HEATER

PROJECT: OFFICE OF GENERAL SERVICES — PANEL: M1E — LOCATION: FIRST FLOOR- ELECTRICAL ROOM 129
PANEL VOLTAGE: 120/208V — PHASE & WIRE: 3PH, 4W — BUS/MAIN (AMPS): 125A MLO
AIC RATING: 22K — MOUNTING: SURFACE — NEMA TYPE: 1

CKT NO.	OCD A	OCD P	DESCRIPTION	LOAD (KVA) MISC	HWH	HVAC	REC	LTG	3 PH SEQUENCE A	B	C	LOAD (KVA) MISC	HWH	HVAC	REC	LTG	DESCRIPTION	OCD A	OCD P	CKT NO.
1	20	1	SPARE (revision 1)						0.5					0.5			AC-S-1 CBHV STORE 123	20	3	2
3	20	1	CUH-1 CORRIDOR 142			0.1				0.6				0.5			/	/	/	4
5	20	1	UH-1 MECH/PLUMBING 122			0.1					0.6			0.5			/	/	/	6
7	20	1	CUH-2A & 2B BVEST.C 140A			0.1			0.2					0.1			AC-S-2 CBHV STORE 123	20	3	8
9	20	1	CP-1A MECH/PLUMBING 122	0.5						0.6				0.1			/	/	/	10
11	20	3	BP-1 MECH/PLUMBING 122	1.3							1.4			0.1			/	/	/	12
13	/	/	/	1.3					1.3								CP- 1B MECH/PLUMBING 122 (STANDBY)	20	1	14
15	/	/	/	1.3						2.3				0.9			CO-1 MECH/PLUMBING 122	20	3	16
17	20	1	JBOX- VAV FIRST FLR EAST SIDE			1.3					2.2			0.9			/	/	/	18
19	20	1	JBOX- VAV SECOND FLR EAST SIDE			1.4			2.3					0.9			/	/	/	20
21	20	1	JBOX- PRV CONTROLS ROOM 122				0.3			0.6				0.3			EF-1 MECH/PLIMBING 122	20	3	22
23	20	1	J-BOX MOTORIZED DAMPER				0.4				0.7			0.3			/	/	/	24
25	35	3	ACC-S			2.5			2.8					0.3			/	/	/	26
27	/	/	/			2.5				2.8				0.3			EF-2 MECH/PLIMBING 122	20	3	28
29	/	/	/			2.5					2.8			0.3			/	/	/	30
31	20	1	WP GFI REC- OUTDOOR				0.3		0.6					0.3			/	/	/	32
33	25	1	SCP-1 MECH/PLUMBING 122			1.7				2.0				0.4			EF-3 MECH/PLIMBING 122	20	2	34
35	20	3	JBOX- BSB-S-1 & BSB-S-2 FIRST FLOOR			0.1					0.5			0.4			/	/	/	36
37	/	/	/			0.1			0.5						0.4		JBOX- TRAP PRIMER AND MOTORIZED PAN	20	1	38
39	/	/	/			0.1				0.1							SPARE	20	1	40
41	20	1	JBOX- TEMPERATURE MONITORING PANEL				0.6				0.6						SPARE	20	1	42
CONNECTED LOAD (KVA)				4.5	0.0	12.4	1.6	0.0	8.2	8.9	8.8	0.0	0.0	7.1	0.4	0.0				
25% OF LARGEST MOTOR (KVA)																				
TOTAL CONNECTED LOAD (KVA)				4.5	0.0	19.5	2.0	0.0												
DEMAND FACTOR				1.0	1.25	1.0	X	1.25									TOTAL DEMAND (KVA)	26		
TOTAL DEMAND LOAD (KVA)				4.5	0.0	19.5	2.0	0.0									LINE CURRENT (AMPS)	72		

X= 1ST 10KVA @ 100%, + REMAINDER @ 50% (N.E.C. 220-44)
HWH - HOT WATER HEATER

GENERAL NOTES

1. TURN ALL SPARE CIRCUIT BREAKERS TO "OFF" POSITION AT COMPLETION OF WORK.
2. PROVIDE TYPED SCHEDULE FOR PANEL BOARDS UTILIZED AT COMPLETION OF PROJECT INDICATING ACTUAL AS-BUILT CONDITIONS.
3. ALL THE UNGROUNDED AND GROUNDED CONDUCTORS OF EACH MULTIWIRE BRANCH CIRCUIT SHALL BE GROUPED BY WIRE TIES OR SIMILAR MEANS IN AT LEAST ONE LOCATION WITHIN THE PANELBOARD OR OTHER POINT OF ORIGINATION.
4. PROVIDE ARC FLASH WARNING LABELS FOR ALL NEW PANEL BOARDS AND SWITCHGEAR IN ACCORDANCE WITH NEC REQUIREMENTS.

SHEET KEY NOTES

1. PROVIDE AND SECURE THE PHYSICAL 'TRIP TIE' WHICH BONDS SINGLE CIRCUIT BREAKER SWITCHES TOGETHER FOR THE GROUP OF SYSTEM FURNITURE, AS WELL AS MULTI-WIRE BRANCH CIRCUITS AS SHOWN IN THE RESPECTIVE PANEL SCHEDULES.

KEY PANELS

PANEL 'L1E(1)'	PANEL 'L1E(2)'	PANEL 'L1E(3)'
PANEL 'L1E(4)'	PANEL 'H1E'	PANEL 'EL1E'
PANEL 'EL'	PANEL 'M1E'	

REVISED DRAWING
09/15/16

NEW YORK STATE OF OPPORTUNITY. | Office of General Services

DESIGN & CONSTRUCTION

CONSULTANT

STV 100 Years

225 Park Avenue South
New York, NY 10003
t 212.777.4400 f 212.529.5237
www.stvinc.com

SETTY

WARNING:
THE ALTERATION OF THIS MATERIAL IN ANY WAY, UNLESS DONE UNDER THE DIRECTION OF A COMPARABLE PROFESSIONAL, I.E. ARCHITECT FOR AN ARCHITECT, ENGINEER FOR AN ENGINEER, OR LANDSCAPE ARCHITECT FOR A LANDSCAPE ARCHITECT, IS A VIOLATION OF THE NEW YORK STATE EDUCATION LAW AND/OR REGULATIONS AND IS A CLASS 'A' MISDEMEANOR.

N

STATE OF NEW YORK — CONRAD D DELA CRUZ — LICENSED PROFESSIONAL ENGINEER — 089769 — 09/15/2016

CONTRACT: ELECTRICAL

TITLE: ABATE HAZARDOUS MATERIALS & RENOVATE BUILDING 4

LOCATION: STATE OFFICE BUILDING CAMPUS
1220 WASHINGTON AVE.
ALBANY, NY 12226

CLIENT: OFFICE OF GENERAL SERVICES

KEY PLAN:

MARK	DATE	DESCRIPTION
△1	09/15/16	ADDENDUM No. 1
3	07/11/16	BID DOCUMENTS
2	06/10/16	FINAL COMPLIANCE
1	03/21/16	FINAL FOR REVIEW

PROJECT NUMBER:	45124 - E
DESIGNED BY:	VL/SM
DRAWN BY:	DAT
FIELD CHECK:	CD
APPROVED:	CD
SCALE:	NOT TO SCALE

SHEET TITLE:

ELECTRICAL PANEL SCHEDULES

DRAWING NUMBER: E-604

10/2/2015 9:37:52 AM
36x24 PLOT SHEET

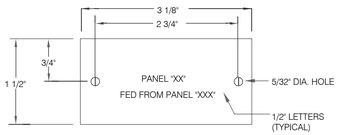

NOTES:

1. REFER TO SPECIFICATIONS FOR ADDITIONAL NAMEPLATE REQUIREMENTS.
2. NAMEPLATE TO BE 1/16" THICK WHITE PLASTIC WITH BLACK CENTER LAMINATION. FACE SHALL BE WHITE, ENGRAVED LETTERS SHALL BE BLACK.
3. SECURE NAMEPLATE TO SURFACES WITH (2) FLAT HEAD BRASS SCREWS. ADHESIVE CEMENT SHALL NOT BE ALLOWED.

9 / E-702 NAME PLATE DETAIL
SCALE: NOT TO SCALE

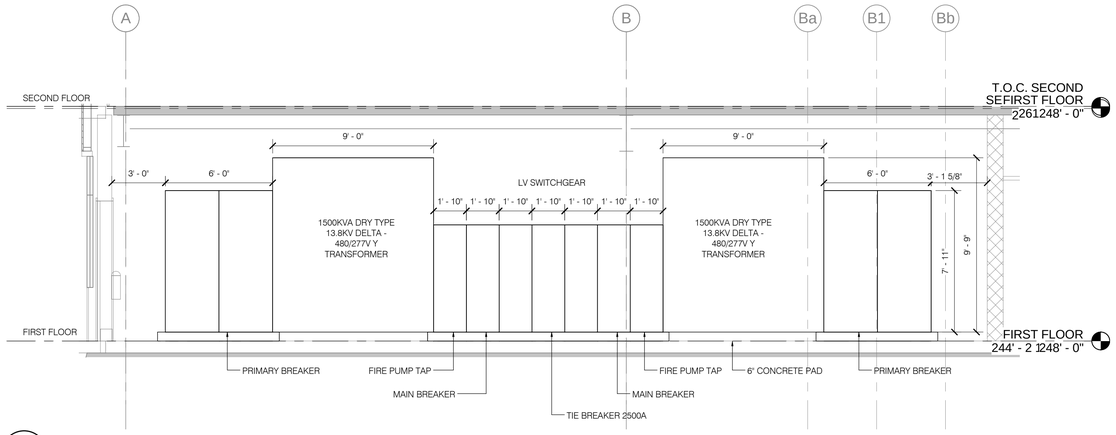

2 / E-702 MAIN SWITCHGEAR ELEVATION
SCALE: 1/4" = 1'-0"

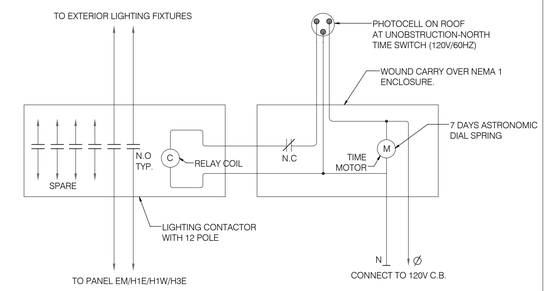

1 / E-702 EXTERIOR LIGHTING - WIRING DIAGRAM
SCALE: NOT TO SCALE

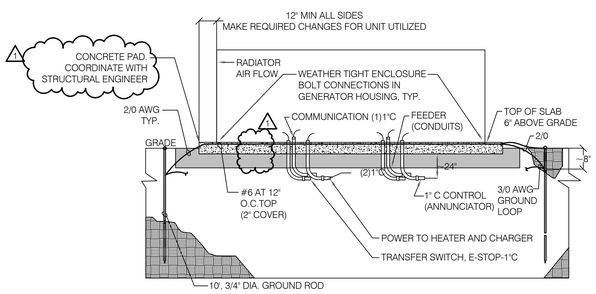

NOTES:

1. SEE GROUNDING DETAIL
2. SEE GENERATOR BLOCK DIAGRAM FOR MORE DETAILS.

5 / E-702 GENERATOR PAD DETAIL
SCALE: NOT TO SCALE

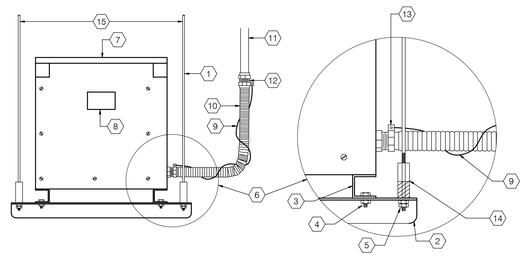

TRANSFORMER NOTES:

1. 1/2" DIA. THREADED STEEL ROD SUPPORT FROM STRUCTURE ABOVE.
2. ANGLE IRON SUPPORT 3"x3"-3/8" 2 REQUIRED, LENGTH TO SUIT.
3. TRANSFORMER BASE CHANNEL.
4. 1/2"DIA. NUT, BOLT & LOCKWASHER 4 REQUIRED.
5. 1/2"DIA. NUT, LOCKNUT & LOCKWASHER 4 REQUIRED.
6. SECONDARY CONNECTION DETAIL, PRIMARY - SIMILAR.
7. TRANSFORMER - MOUNT BOTTOM SUPPORTS 6'-6" A.F.F.
8. NAMEPLATE - CONNECTION DIAGRAM TO BE VISIBLE FROM SERVICE ACCESS SPACE.
9. EXTERNAL COPPER BONDING WIRE.
10. LIQUID TIGHT FLEXIBLE METAL CONDUIT 18" MIN.
11. EMT CONDUIT.
12. COMBINATION COUPLING.
13. GROUND CONNECTOR.
14. VIBRATION ELIMINATOR 4 REQUIRED.
15. CONNECT STEEL RODS TO STEEL BEAMS - REFER TO STRUCTURAL.

4 / E-702 CEILING HUNG TRANSFORMER
SCALE: NOT TO SCALE

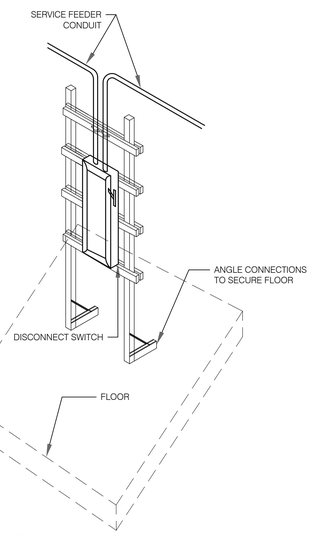

3 / E-702 UNI-STRUT DETAIL
SCALE: NOT TO SCALE

Discipline: ELECTRICAL	
Project Description: OFFICE OF GENERAL SERVICES	
Date of Submission: 07/11/2016	
Submission:	
	Sign offs: (First Initial, Last Name)
Originator:	DM
Checked by:	CD
Corrected by:	SMA/NHN
Back checked by:	CD/SM/VL
Check list used:	
General	
Discipline	

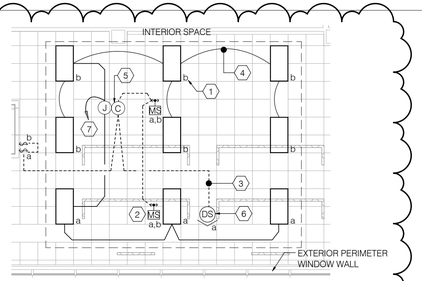

NOTE: REFER TO SPECIFICATION SECTION 260923 FOR BASIS OF DESIGN EQUIPMENT SPECIFICATION.

1. TYPICAL SUBSCRIPT ON LIGHT FIXTURE, SWITCH, OCCUPANCY SENSOR AND DAYLIGHT SENSOR DENOTES LIGHTING ZONE AND CONTROL DESIGNATION.
2. TYPICAL OCCUPANCY SENSOR.
3. TYPICAL CAT 5E CABLE, PLENUM RATED WITH RJ45 CONNECTORS.
4. TYPICAL BRANCH CIRCUIT WIRING.
5. DIGITAL LIGHTING MANAGEMENT DUAL RELAY ROOM CONTROLLER MODULE.
6. TYPICAL DAYLIGHT SENSOR TO CONTROL THE LIGHT FIXTURES ALONG THE EXTERIOR PERIMETER WINDOW WALL IN THIS AREA.
7. TO 277V NORMAL LIGHTING CIRCUIT.

10 / E-702 TYPICAL LOW VOLTAGE ROOM CONTROLLERMODULE WIRING DIAGRAM
SCALE: NOT TO SCALE

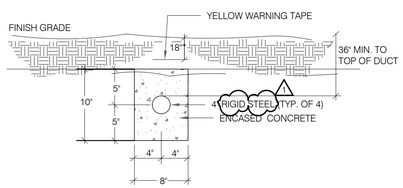

NOTES:

1. PROVIDE GRAVEL MINIMUM 12" IN DEPTH BENEATH AND ALONG ROUTING OF THE DUCTBANK.
2. ALL CONDUITS IN DUCTBANK TO BE SEALED WATERTIGHT.
3. SLOPE DUCTBANKS TO MAINTAIN 36" MINIMUM OF COVER.
4. ALL EMPTY CONDUITS SHALL BE PROVIDED WITH PULL STRINGS.
5. PROVIDE (4)#5 CONTINUOUS REBAR AT CORNERS WITH #4 STIRRUPS AT PERIMETER OF ENCASEMENT.

8 / E-702 4" - 1 WAY DUCT BANK-SECTION B-B
SCALE: NOT TO SCALE

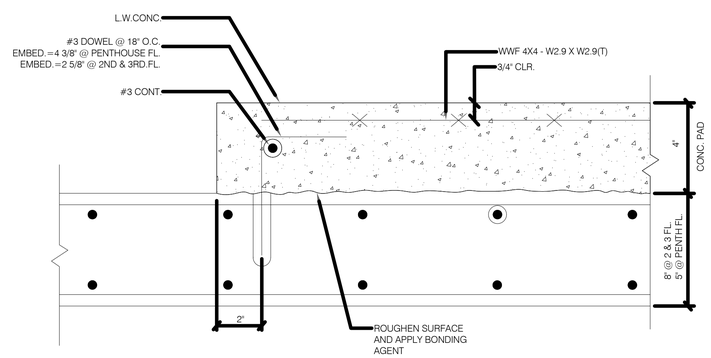

7 / E-702 TYPICAL HOUSE KEEPING PAD DETAIL
SCALE: NOT TO SCALE

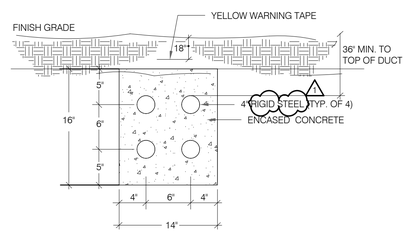

NOTES:

1. PROVIDE GRAVEL MINIMUM 12" IN DEPTH BENEATH AND ALONG ROUTING OF THE DUCTBANK.
2. ALL CONDUITS IN DUCTBANK TO BE SEALED WATERTIGHT.
3. SLOPE DUCTBANKS TO MAINTAIN 36" MINIMUM OF COVER.
4. ALL EMPTY CONDUITS SHALL BE PROVIDED WITH PULL STRINGS.
5. PROVIDE (4)#5 CONTINUOUS REBAR AT CORNERS WITH #4 STIRRUPS AT PERIMETER OF ENCASEMENT.

6 / E-702 4" - 4 WAY DUCT BANK (2Hx2V)-SECTION A-A, C-C & D-D
SCALE: NOT TO SCALE

REVISED DRAWING
09/15/16

NEW YORK STATE OF OPPORTUNITY. Office of General Services

DESIGN & CONSTRUCTION

CONSULTANT

STV 100 Years

225 Park Avenue South
New York, NY 10003
t 212.777.4400 f 212.529.5237
www.stvinc.com

SETTY

WARNING:
THE ALTERATION OF THIS MATERIAL IN ANY WAY, UNLESS DONE UNDER THE DIRECTION OF A COMPARABLE PROFESSIONAL, I.E. ARCHITECT FOR AN ARCHITECT, ENGINEER FOR AN ENGINEER, OR LANDSCAPE ARCHITECT FOR A LANDSCAPE ARCHITECT, IS A VIOLATION OF THE NEW YORK STATE EDUCATION LAW AND/OR REGULATIONS AND IS A CLASS 'A' MISDEMEANOR.

N

CONTRACT:
ELECTRICAL

TITLE:
ABATE HAZARDOUS MATERIALS & RENOVATE BUILDING 4

LOCATION:
STATE OFFICE BUILDING CAMPUS
1220 WASHINGTON AVE.
ALBANY, NY 12226

CLIENT:
OFFICE OF GENERAL SERVICES

KEY PLAN:

MARK	DATE	DESCRIPTION
4	09/15/16	ADDENDUM No. 1
3	07/11/16	BID DOCUMENTS
2	06/10/16	FINAL COMPLIANCE
1	03/21/16	FINAL FOR REVIEW

PROJECT NUMBER:	45124 - E
DESIGNED BY:	VL/SM
DRAWN BY:	DAT
FIELD CHECK:	CD
APPROVED:	CD
SCALE:	NOT TO SCALE

SHEET TITLE:
ELECTRICAL DETAILS

DRAWING NUMBER:
E-702

SHEET 54 OF 56

9/22/2016 11:06:18 AM
S9024 PLOT SHEET

DUCTWORK

DOUBLE LINE

- DUCTWORK - DUCT SIZE INDICATED CLEAR AIRWAY DIMENSION
- TRANSITION
- RADIUS ELBOW
- RECTANGULAR ELBOW (1)
- BRANCH DUCT TAKE-OFF
- RISE OR DROP DIRECTION OF AIR FLOW (D / R)
- DIFFUSER (NUMBER / CFM)
- CEILING RETURN/EXHAUST REGISTER (R) OR GRILLE (G) (NUMBER / CFM)
- SUPPLY AIR GRILLE (G) OR SUPPLY AIR REGISTER (R) (NUMBER / CFM)
- RETURN AND/OR EXHAUST AIR GRILLE (G) OR REGISTER (R) (NUMBER / NECK SIZE / CFM)
- DUCTWORK UP
- DUCTWORK DOWN
- MECHANICAL EQUIPMENT ACCESS CLEARANCE
- CHILLED BEAM
- SUPPLY DIFFUSERS

SINGLE LINE

- RECTANGULAR ELBOW
- RISE OR DROP DIRECTION OF AIR FLOW (D / R)
- DIFFUSER (NUMBER / CFM)
- CEILING RETURN/EXHAUST REGISTER (R) OR GRILLE (G) (NUMBER / CFM)
- SUPPLY AIR GRILLE (G) OR SUPPLY AIR REGISTER (R) (NUMBER / NECK SIZE / CFM)
- RETURN AND/OR EXHAUST AIR GRILLE (G) OR REGISTER (R) (NUMBER / NECK SIZE / CFM)

- SUPPLY AIR OUTSIDE AIR / RETURN OR EXHAUST AIR (1)
- PROPORTIONAL SPLIT (DOUBLE LINE)
- PROPORTIONAL SPLIT (SINGLE LINE)
- U — DOOR UNDERCUT
- FD/AD — FIRE DAMPER WITH ACCESS DOOR
- FSD(VD)/AD — COMBINATION OF FIRE AND SMOKE DAMPER WITH ACCESS DOOR
- RETURN REGISTER (NOT DUCTED) (NUMBER / CFM)
- T — THERMOSTAT
- T/RH — TEMPERATURE AND HUMIDITY SENSOR
- CO_2 — CO2 SENSOR (CONFERENCE ROOM, BREAK ROOM)

AIR FLOW DIAGRAM SYMBOLS

- IN-LINE FAN
- CENTRIFUGAL FAN
- EXHAUST FAN (MUSHROOM TYPE)
- UPBLAST EXHAUST FAN
- SOUND TRAP
- AXIAL FAN
- UNIT HEATER
- HC — HEATING COIL
- CC — COOLING COIL
- VAV TERMINAL BOX (1)
- AIR INTAKE/RELIEF LOUVER
- OAI — OUTDOOR AIR INTAKE/RELIEF LOUVER
- AIR FLOW MEASURING STATION
- SUPPLY DIFFUSER
- RETURN/EXHAUST REGISTER/GRILL
- VOLUME DAMPER
- FIRE SMOKE DAMPER
- S — SOLENOID ACTUATOR
- CYLINDRICAL ACTUATOR
- DIAPHRAGM ACTUATOR
- AMD — AUTOMATIC MOTORIZED DAMPER WITH CYLINDRICAL ACTUATOR
- DUCT SMOKE DETECTOR
- MOTOR
- UNIT
- P — DUCT PRESSURE SENSOR
- EXHAUST
- SUPPLY AIR / RETURN AIR

NOTE: NOT ALL SYMBOLS ARE NECESSARILY USED.

GENERAL NOTES

1. COORDINATE WORK WITH OTHERS CONTRACTORS BEFORE, DURING AND AFTER CONSTRUCTION.
2. COORDINATE PHASING AND SCHEDULING FOR EQUIPMENT RIGGING.
3. COORDINATE MECHANICAL SYSTEM INSTALLATION IN THE CEILING AND RAISED FLOOR SPACE.
4. COORDINATE THE LOCATIONS OF CEILING MOUNTED DEVICES.
5. COORDINATE THE LOCATIONS OF UNDER DOOR CUT.
6. COORDINATE THE FINAL LOCATION OF ALL THERMOSTATS (INCLUDING ALL SPACE TEMPERATURE, HUMIDITY AND CO2 SENSORS AND CONTROL DEVICE) AND OBTAIN ENGINEER APPROVAL PRIOR TO INSTALLATION.
7. CONCRETE PADS FOR MECHANICAL EQUIPMENT ON THE ROOF SHALL BE PROVIDED BY CONSTRUCTION CONTRACTOR, COORDINATE THE LOCATION AND PHASING BEFORE EQUIPMENT RIGGING.
8. PROVIDE CONCRETE PADS FOR MECHANICAL EQUIPMENT IN THE PENTHOUSE AND MECHANICAL EQUIPMENT ROOMS.
9. FURNISH APPROVED SHOP DRAWINGS OF DUCTWORK AND PIPING TO OTHER CONTRACTORS, TO COORDINATE LOCATION AND SIZE OF ACCESS DOORS IN WALLS, SOFFITS, CEILINGS AND FLOOR CONCEALING DUCTWORK AND PIPING. ENSURE THAT THE DUCT MOUNTED SMOKE DETECTORS, CONTROL INSTRUMENTATION, DAMPERS AND MOTORIZED DAMPERS, DUCT ACCESS DOORS, PIPING SYSTEM VALVES AND FIRE SMOKE DAMPERS ARE ACCESSIBLE.
10. COORDINATE AND SCHEDULE CAMPUS STEAM AND CHILLED WATER SUPPLY. REQUESTED MUST BE IN WRITING. APPROVAL MUST BE OBTAINED MINIMUM TWO WEEKS PRIOR TO THE SCHEDULED WORK.
11. ALL DUCT SIZES SHOWN ARE CLEAR AIRWAY DIMENSIONS. INCREASE SHEET METAL SIZE TO ACCOMMODATE DUCT LINER AS REQUIRED.
12. PROVIDE ISOLATION/BALANCING DAMPER ON EVERY BRANCH OF EXHAUST AND RETURN DUCTWORK, AND SUPPLY DUCTWORK OF DOWNSTREAM OF EVERY VAV BOX WITH MORE THAN ONE OUTLET, AS SHOWN ON THE DRAWINGS. WHERE DAMPER CANNOT BE PROVIDED AT BRANCH, IT SHALL BE PROVIDED AT PLENUM INLET OR IN DUCT CONNECTION TO DIFFUSER/GRILLE, AS SHOWN ON THE DETAILS.
13. FLEXIBLE DUCTWORK SHALL ONLY BE USED FOR CONNECTIONS TO AIR INLETS AND OUTLETS. FLEXIBLE DUCTWORK SHALL NOT EXCEED 4 FEET IN LENGTH. FLEXIBLE DUCTWORK SHALL BE CONNECTED TO SHEET METAL DUCT WITH TWO BANDS, ONE FOR THE INNER LINER AND THE SECOND FOR THE OUTER LINER. THE USE OF DUCT TAPE ALONE IS NOT PERMITTED.
14. PROVIDE FLEXIBLE CONNECTION FOR DUCTWORK CONNECTING WALL, EQUIPMENT, AS SHOWN ON DETAILS DRAWINGS.
15. PROVIDE WIRE MESH SCREEN FOR ALL OPEN END DUCTWORK AS SHOWN ON THE DETAIL DRAWINGS.
16. ALL AIR OUTLETS SHALL BE FIELD ADJUSTED FOR OPTIMUM DRAFT AND THROW PERFORMANCE.
17. PROVIDE VIBRATION ISOLATION TO MECHANICAL EQUIPMENT AS SHOWN ON THE DETAIL DRAWINGS.
18. PROVIDE PROTECTION TO EQUIPMENT, DURING STORAGE, INSTALLATION AND POST INSTALLATION. PROVIDE ALL NECESSARY TEMPORARY OR PERMANENT CAPS OR PLUGS FOR PIPING AND DUCTWORK DURING CONSTRUCTION. DO NOT LEAVE PIPING AND DUCTWORK OPEN ENDED.
19. PROVIDE 2 INCHES ACOUSTIC LINING TO THE MAIN DUCTWORK 30 FEET DOWNSTREAM OF SUPPLY FAN AND 30 FEET UPSTREAM OF RETURN FAN. PROVIDE 1 INCH ACOUSTIC LINING DOWNSTREAM OF VAV BOX, AND MAKE-UP TRANSFER DUCTWORK.
20. PROVIDE ACCESS DOORS IN DUCTWORK. SIZE SHALL RANGE FROM 24"X24" MAX. TO 12"X6" MIN. THE LARGEST POSSIBLE SIZE SHALL BE CONSIDERED. THE WIDTH OF ACCESS DOOR SHALL NOT BE LESS THAN HALF OF THE DUCT, OR 6" AS MIN.
21. PROVIDE AIR VENT AT HIGHEST POINT AND DRAIN AT LOWEST POINT FOR ALL HYDRONIC SYSTEMS.
22. PROVIDE FLEXIBLE CONNECTION FOR PIPING CONNECTING WITH EQUIPMENT, AS SHOWN ON DETAILS DRAWINGS.
23. ALLOW PIPING EXPANSION BY MEANS OF EXPANSION LOOPS, AS SHOWN ON THE DETAIL DRAWINGS.
24. PROVIDE DROP-IN OR SLEEVE TYPE FOR SUPPORT ANCHORS SECURED TO THE BOTTOM OF FLOOR. POWDER CHARGED ANCHORING METHOD NOT ALLOWED.
25. PROVIDE ISOLATION VALVES, ISOLATION/BALANCING VALVES AT BRANCH TAKE-OFF SUPPLY AND RETURN PIPING AS INDICATED ON THE DRAWINGS.
26. ISOLATION VALVES IN WATER SYSTEMS SHALL BE:
    BALL VALVES FOR 2" AND SMALLER PIPING
    BUTTERFLY VALVES FOR 2 1/2" AND LARGER PIPING
27. SMOKE DETECTORS SHALL BE FURNISHED BY FIRE PROTECTION CONTRACTOR, INSTALLED BY H CONTRACTOR, AND WIRED BY FIRE PROTECTION CONTRACTOR. THE INSTALLATION DETAIL ASSOCIATED WITH THE UL LISTING SHALL BE STRICTLY FOLLOWED.
28. COORDINATE INSTALLATION OF THE COVERS FOR FINED TUBE RADIATOR WITH CONSTRUCTION CONTRACTORS, AFTER COMPLETION OF FLOOR, WALL AND PARTITIONS.
29. PROVIDE FULL MOCK UP FOR EACH TYPE OF CHILLED BEAM FOR OPERATION AND CONTROL VERIFICATION AT THE START OF THE PROJECT.

CODES AND STANDARDS

- OGS DESIGN GUIDES – HVAC GUIDES
- 2015 INTERNATIONAL BUILDING CODE
- 2015 INTERNATIONAL FIRE CODE
- 2015 INTERNATIONAL MECHANICAL CODE
- 2015 INTERNATIONAL FUEL GAS CODE
- 2015 INTERNATIONAL PROPERTY MAINTENANCE CODE
- 2015 INTERNATIONAL ENERGY CONSERVATION CODE
- NEW YORK STATE UNIFORM FIRE PREVENTION AND BUILDING CODE
- ASHRAE 90.1-2013: ENERGY STANDARD FOR BUILDINGS EXCEPT LOW-RISE RESIDENTIAL BUILDINGS
- ASHRAE 62.1-2013: VENTILATION FOR ACCEPTABLE INDOOR AIR QUALITY
- SMACNA DUCT CONSTRUCTION STANDARDS
- NFPA 101-2012 LIFE SAFETY CODE
- NFPA 72-2010 NATIONAL FIRE ALARM AND SIGNALING CODE
- RELEVANT ASHRAE GUIDELINES

VENTILATION CRITERIA

OCCUPANCY CATEGORY	OCCUPANCY DENSITY # PERSONS/ 1000 SF IMC 2015 (1)	OCCUPANCY DENSITY #PERSONS/ 1000 SF FLOOR PLAN	OCCUPANCY DENSITY #PERSONS/ 1000 SF FLOOR PLAN 100%CD	MIN. VENT AIR IN BREATHING ZONE IMC 2015 (1)		MIN. EXHAUST AIR CFM IMC 2015 (1)	REMARKS
				CFM/ PERSON	CFM/ SQ.FT		
OPEN OFFICE	5	14	14	5	0.06	---	---
ENCLOSED OFFICE	N/A	---	1	5	0.06	---	---
CONFERENCE MEETING	50	---	50	5	0.06	---	---
MAIN ENTRY LOBBY	10	----	10	5	0.06	---	---
TRAINING ROOM	35	37	37	10	0.12 (1)		
BREAK ROOM*		30	30	5	0.12	---	100 PER ROOM EXHAUST
TOILET	---	---	---	---	---	70/FIXTURE	---
CORRIDOR ELEVATOR LOBBY	---	---	---	---	0.06	---	---
UTILITIES, MER	---	---	---	---	---	---	---
JANITOR CLOSET	---	---	---	---	---	70 PER FIXTURE	---
COPY/PRINTER AREA	4	---	---	5	0.06	0.5 CFM/SQ.FT	---
STORAGE	---	---	---	---	0.12 (1)	---	---

NOTE:

*VENTILATION RATES ARE BASED ON ASHRAE 62.1-2013.

1. ELECTRICAL ROOM, TELECOM CLOSET, ELEVATOR MACHINE ROOM, PUMP ROOM, FAN ROOM AND MECHANICAL ROOM ARE UNLISTED CATEGORY ROOMS FOR VENTILATION. IN TERMS OF CLASSIFICATION OF OCCUPANCY ACTIVITIES, THOSE ROOMS ARE CONSIDERED UNOCCUPIED. UNOCCUPIED ROOMS DO NOT REQUIRE MINIMUM VENTILATION.

DESIGN CONDITIONS (1)

OUTDOOR	DB (°F)	WB(°F)
SUMMER	89.2	73
WINTER	-7	
INDOOR OCCUPIED	DB (°F)	RH
SUMMER	75	50%
WINTER	72	
INDOOR UNOCCUPIED	DB (°F)	RH
SUMMER	95	
WINTER	60	

REVISED DRAWING
09/15/16

NEW YORK STATE OF OPPORTUNITY. Office of General Services
DESIGN & CONSTRUCTION

CONSULTANT

STV 100 Years
225 Park Avenue South
New York, NY 10003
t 212.777.4400 f 212.529.5237
www.stvinc.com

LI SALTZMAN ARCHITECTS, P.C.
ARCHITECTURE AND PRESERVATION

WARNING:
THE ALTERATION OF THIS MATERIAL IN ANY WAY, UNLESS DONE UNDER THE DIRECTION OF A COMPARABLE PROFESSIONAL, I.E. ARCHITECT FOR AN ARCHITECT, ENGINEER FOR AN ENGINEER, OR LANDSCAPE ARCHITECT FOR A LANDSCAPE ARCHITECT, IS A VIOLATION OF THE NEW YORK STATE EDUCATION LAW AND/OR REGULATIONS AND IS A CLASS 'A' MISDEMEANOR.

N

STATE OF NEW YORK · CLARE XINYAN PHILLIPS · 088285 · LICENSED PROFESSIONAL ENGINEER

CONTRACT: HVAC

TITLE: ABATE HAZARDOUS MATERIALS & RENOVATE BUILDING NO. 4

LOCATION: STATE OFFICE BUILDING CAMPUS
1220 WASHINGTON AVE.
ALBANY, NY 12226

CLIENT: OFFICE OF GENERAL SERVICES

KEY PLAN:

MARK	DATE	DESCRIPTION
1	08/26/16	ADDENDUM 1
	07/11/16	BID DOCUMENT

PROJECT NUMBER:	45124 - H
DESIGNED BY:	FG, P.E.
DRAWN BY:	AK
FIELD CHECK:	Checker
APPROVED:	Approver
SCALE:	12" = 1'-0"

SHEET TITLE:
HVAC LEGENDS, SYMBOLS, AND ABBREVIATIONS - 2

DRAWING NUMBER:
M-002

SHEET OF

9/22/2016 10:19:34 AM
36x24 PLOT SHEET

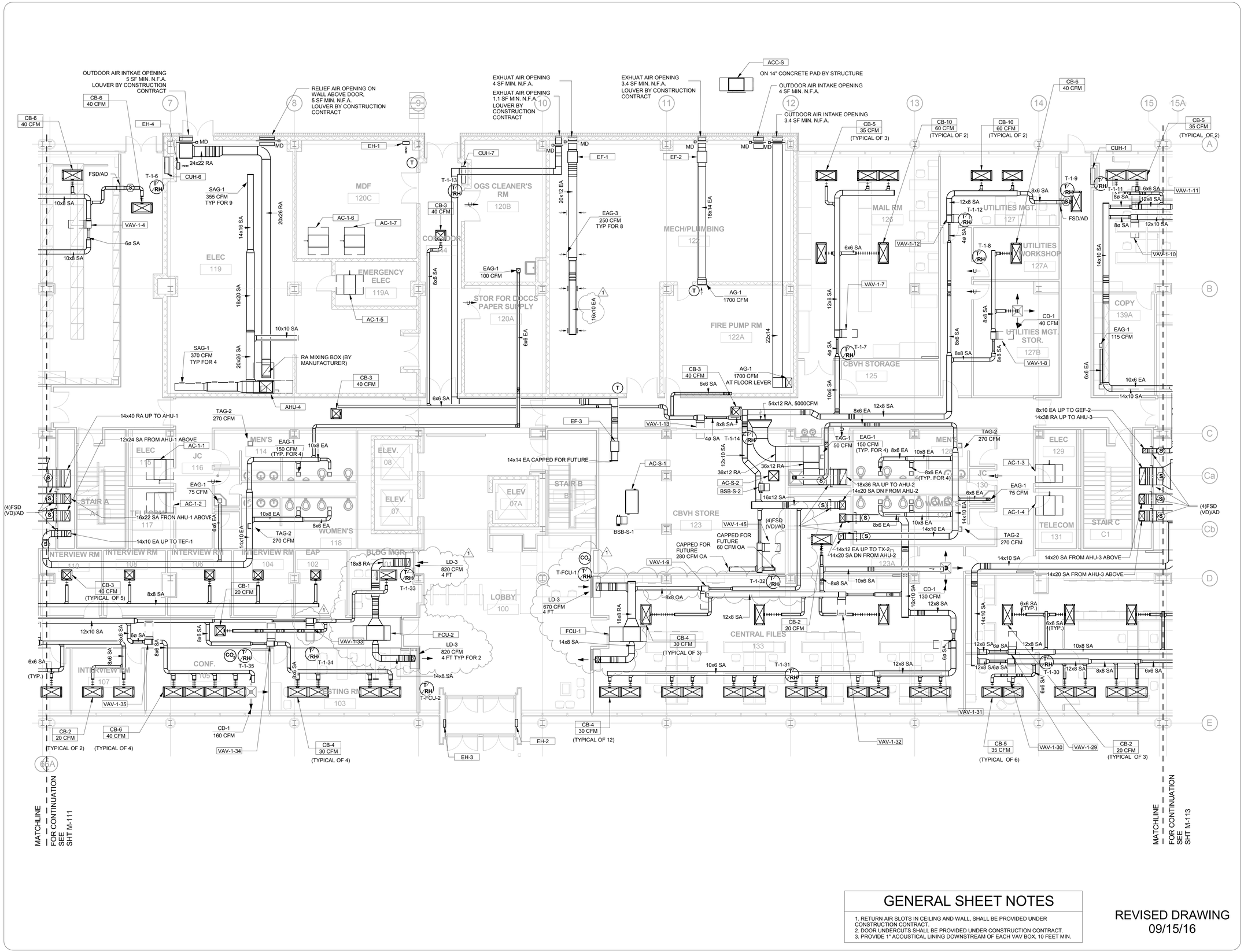

GENERAL SHEET NOTES

1. RETURN AIR SLOTS IN CEILING AND WALL, SHALL BE PROVIDED UNDER CONSTRUCTION CONTRACT.
2. DOOR UNDERCUTS SHALL BE PROVIDED UNDER CONSTRUCTION CONTRACT.
3. PROVIDE 1" ACOUSTICAL LINING DOWNSTREAM OF EACH VAV BOX, 10 FEET MIN.

REVISED DRAWING 09/15/16

NEW YORK STATE OF OPPORTUNITY. Office of General Services

DESIGN & CONSTRUCTION

CONSULTANT

STV 100 Years

225 Park Avenue South
New York, NY 10003
t 212.777.4400 f 212.529.5237
www.stvinc.com

LI SALTZMAN ARCHITECTS, P.C.
ARCHITECTURE AND PRESERVATION

WARNING:
THE ALTERATION OF THIS MATERIAL IN ANY WAY, UNLESS DONE UNDER THE DIRECTION OF A COMPARABLE PROFESSIONAL, I.E. ARCHITECT FOR AN ARCHITECT, ENGINEER FOR AN ENGINEER, OR LANDSCAPE ARCHITECT FOR A LANDSCAPE ARCHITECT, IS A VIOLATION OF THE NEW YORK STATE EDUCATION LAW AND/OR REGULATIONS AND IS A CLASS 'A' MISDEMEANOR.

N

STATE OF NEW YORK · CLARE KINYAN PHILLIPS · 085265 · LICENSED PROFESSIONAL ENGINEER

CONTRACT: HVAC

TITLE: ABATE HAZARDOUS MATERIALS & RENOVATE BUILDING NO. 4

LOCATION: STATE OFFICE BUILDING CAMPUS 1220 WASHINGTON AVE. ALBANY, NY 12226

CLIENT: OFFICE OF GENERAL SERVICES

KEY PLAN: A B C

MARK	DATE	DESCRIPTION
1	08/26/16	ADDENDUM 1
	07/11/16	BID DOCUMENT

PROJECT NUMBER:	45124 - H
DESIGNED BY:	FG, P.E.
DRAWN BY:	AK
FIELD CHECK:	Checker
APPROVED:	Approver
SCALE:	As indicated

SHEET TITLE:

HVAC FIRST FLOOR DUCTWORK PLAN B

DRAWING NUMBER: M-112

SHEET OF

9/16/2016 11:16:20 AM
36x24 PLOT SHEET

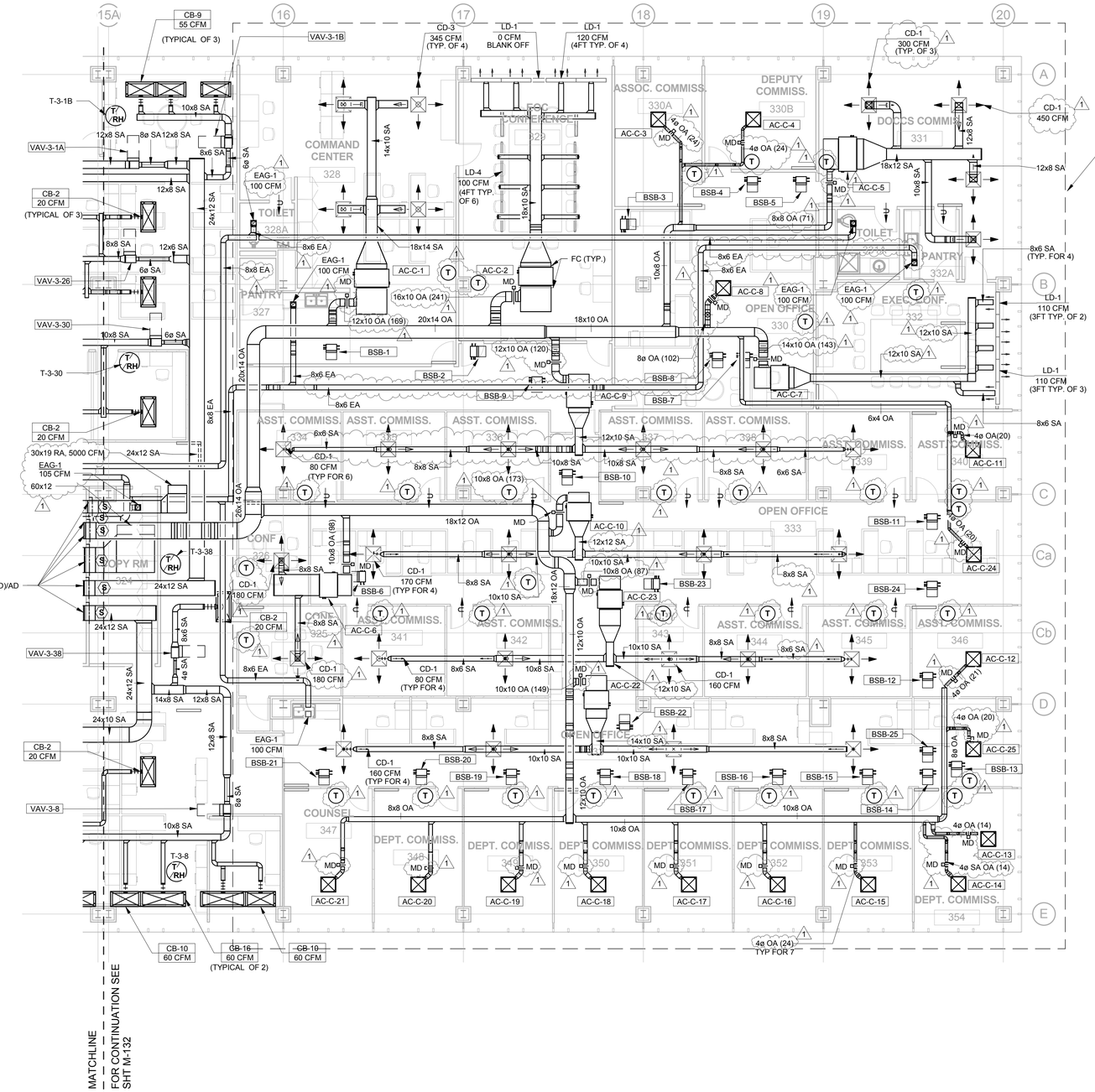

GENERAL SHEET NOTES

1. RETURN AIR SLOTS IN CEILING AND WALL, SHALL BE PROVIDED UNDER CONSTRUCTION CONTRACT.
2. DOOR UNDERCUTS SHALL BE PROVIDED UNDER CONSTRUCTION CONTRACT.
3. PROVIDE 1" ACOUSTICAL LINING DOWNSTREAM OF EACH VAV BOX, 10 FEET MIN.

REVISED DRAWING
09/15/16

NEW YORK STATE OF OPPORTUNITY. Office of General Services

DESIGN & CONSTRUCTION

CONSULTANT

STV 100 Years

225 Park Avenue South
New York, NY 10003
t 212.777.4400 f 212.529.5237
www.stvinc.com

LI SALTZMAN ARCHITECTS, P.C.
ARCHITECTURE AND PRESERVATION

WARNING:
THE ALTERATION OF THIS MATERIAL IN ANY WAY, UNLESS DONE UNDER THE DIRECTION OF A COMPARABLE PROFESSIONAL, I.E. ARCHITECT FOR AN ARCHITECT, ENGINEER FOR AN ENGINEER, OR LANDSCAPE ARCHITECT FOR A LANDSCAPE ARCHITECT, IS A VIOLATION OF THE NEW YORK STATE EDUCATION LAW AND/OR REGULATIONS AND IS A CLASS 'A' MISDEMEANOR.

N

STATE OF NEW YORK · CLARE KINYAN PHILLIPS · 088265 · LICENSED PROFESSIONAL ENGINEER

CONTRACT: HVAC

TITLE: ABATE HAZARDOUS MATERIALS & RENOVATE BUILDING NO. 4

LOCATION: STATE OFFICE BUILDING CAMPUS
1220 WASHINGTON AVE.
ALBANY, NY 12226

CLIENT: OFFICE OF GENERAL SERVICES

KEY PLAN: A | B | C

MARK	DATE	DESCRIPTION
1	08/26/16	ADDENDUM 1
	07/11/16	BID DOCUMENT

PROJECT NUMBER:	45124 - H
DESIGNED BY:	FG, P.E.
DRAWN BY:	AK
FIELD CHECK:	Checker
APPROVED:	Approver
SCALE:	As indicated

SHEET TITLE:

HVAC THIRD FLOOR DUCTWORK PLAN C

DRAWING NUMBER: M-133

SHEET OF

9/16/2016 11:16:50 AM
3B0624 PLOT SHEET 1

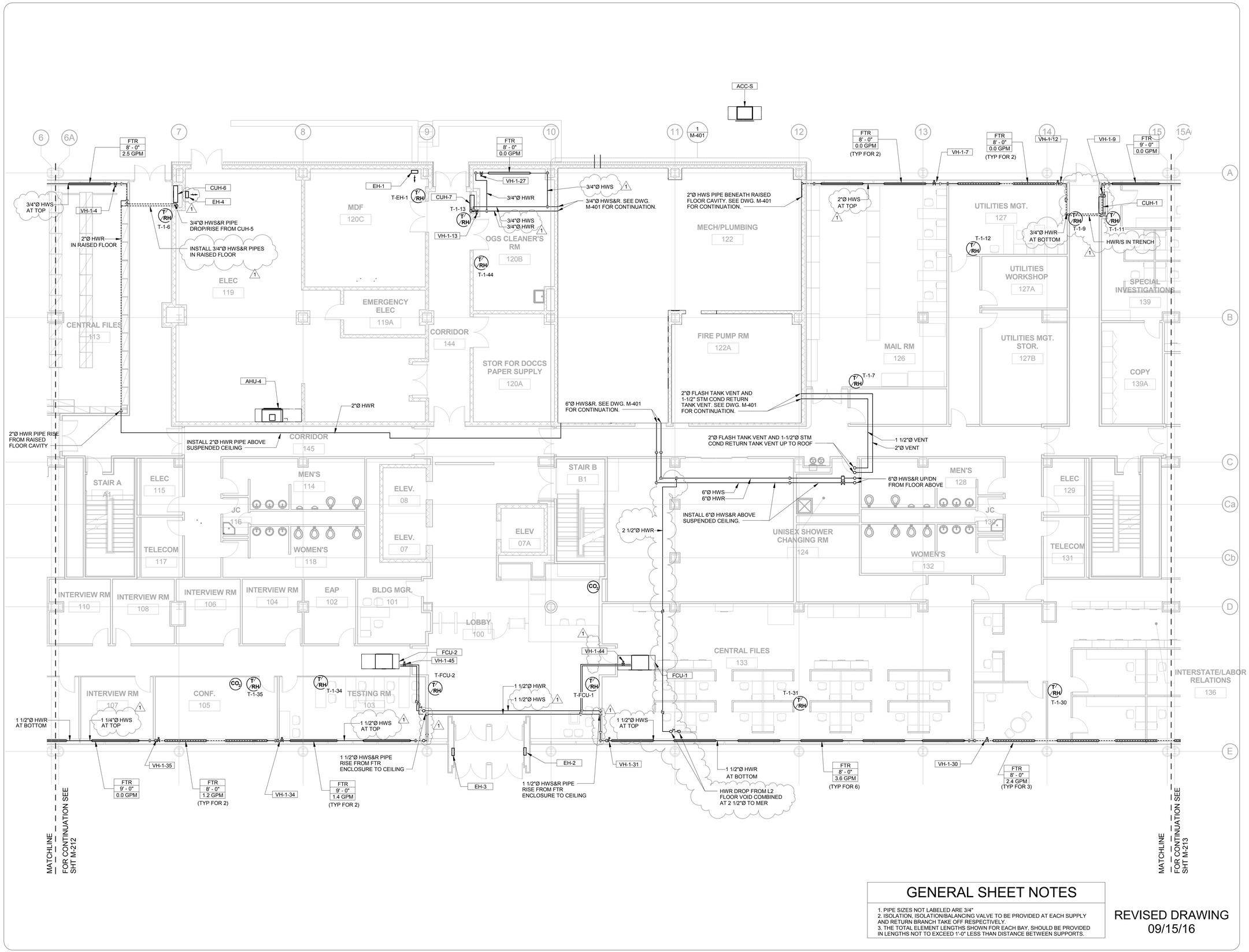

GENERAL SHEET NOTES

1. PIPE SIZES NOT LABELED ARE 3/4"
2. ISOLATION, ISOLATION/BALANCING VALVE TO BE PROVIDED AT EACH SUPPLY AND RETURN BRANCH TAKE OFF RESPECTIVELY.
3. THE TOTAL ELEMENT LENGTHS SHOWN FOR EACH BAY, SHOULD BE PROVIDED IN LENGTHS NOT TO EXCEED 1'-0" LESS THAN DISTANCE BETWEEN SUPPORTS.

REVISED DRAWING
09/15/16

NEW YORK STATE OF OPPORTUNITY. Office of General Services

DESIGN & CONSTRUCTION

CONSULTANT

STV 100 Years

225 Park Avenue South
New York, NY 10003
t 212.777.4400 f 212.529.5237
www.stvinc.com

LI SALTZMAN ARCHITECTS, P.C.
ARCHITECTURE AND PRESERVATION

WARNING:
THE ALTERATION OF THIS MATERIAL IN ANY WAY, UNLESS DONE UNDER THE DIRECTION OF A COMPARABLE PROFESSIONAL, I.E. ARCHITECT FOR AN ARCHITECT, ENGINEER FOR AN ENGINEER, OR LANDSCAPE ARCHITECT FOR A LANDSCAPE ARCHITECT, IS A VIOLATION OF THE NEW YORK STATE EDUCATION LAW AND/OR REGULATIONS AND IS A CLASS 'A' MISDEMEANOR.

N

STATE OF NEW YORK · CLARE KINYAN PHILLIPS · 088265 · LICENSED PROFESSIONAL ENGINEER

CONTRACT:
HVAC

TITLE:
ABATE HAZARDOUS MATERIALS & RENOVATE BUILDING NO. 4

LOCATION:
STATE OFFICE BUILDING CAMPUS
1220 WASHINGTON AVE.
ALBANY, NY 12226

CLIENT:
OFFICE OF GENERAL SERVICES

KEY PLAN:
A B C

MARK	DATE	DESCRIPTION
1	08/26/16	ADDENDUM 1
	07/11/16	BID DOCUMENT

PROJECT NUMBER:	45124 - H
DESIGNED BY:	FG, P.E.
DRAWN BY:	AK
FIELD CHECK:	Checker
APPROVED:	Approver
SCALE:	As indicated

SHEET TITLE:
HVAC FIRST FLOOR HW PIPING PLAN B

DRAWING NUMBER:
M-212

SHEET OF

9/16/2016 11:17:11 AM
36x24 PLOT SHEET

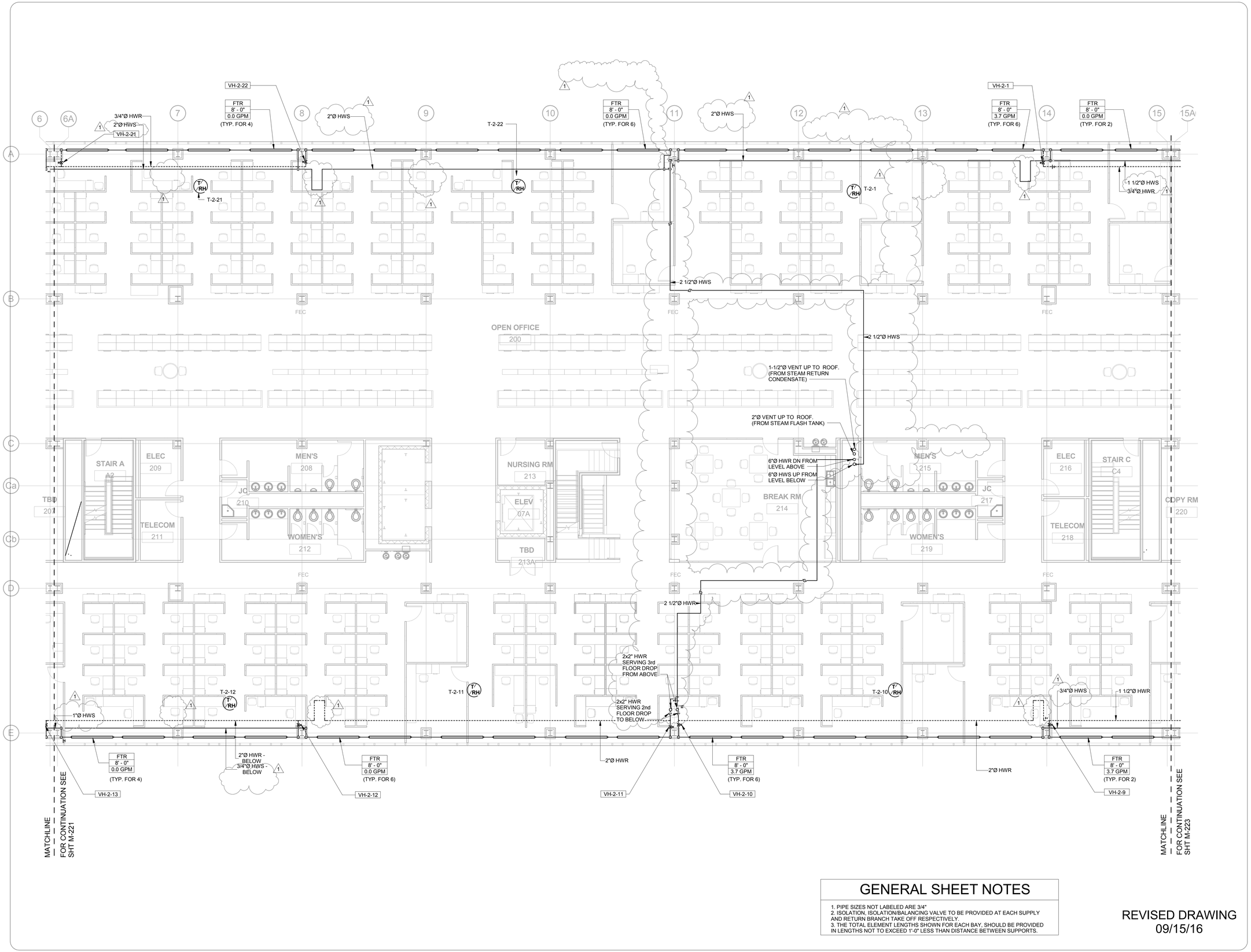

GENERAL SHEET NOTES

1. PIPE SIZES NOT LABELED ARE 3/4"
2. ISOLATION, ISOLATION/BALANCING VALVE TO BE PROVIDED AT EACH SUPPLY AND RETURN BRANCH TAKE OFF RESPECTIVELY.
3. THE TOTAL ELEMENT LENGTHS SHOWN FOR EACH BAY, SHOULD BE PROVIDED IN LENGTHS NOT TO EXCEED 1'-0" LESS THAN DISTANCE BETWEEN SUPPORTS.

REVISED DRAWING
09/15/16

NEW YORK STATE OF OPPORTUNITY. Office of General Services

DESIGN & CONSTRUCTION

CONSULTANT

STV 100 Years

225 Park Avenue South
New York, NY 10003
t 212.777.4400 f 212.529.5237
www.stvinc.com

LI SALTZMAN ARCHITECTS, P.C.
ARCHITECTURE AND PRESERVATION

WARNING:
THE ALTERATION OF THIS MATERIAL IN ANY WAY, UNLESS DONE UNDER THE DIRECTION OF A COMPARABLE PROFESSIONAL, I.E. ARCHITECT FOR AN ARCHITECT, ENGINEER FOR AN ENGINEER, OR LANDSCAPE ARCHITECT FOR A LANDSCAPE ARCHITECT, IS A VIOLATION OF THE NEW YORK STATE EDUCATION LAW AND/OR REGULATIONS AND IS A CLASS 'A' MISDEMEANOR.

N

STATE OF NEW YORK · CLARE XINYAN PHILLIPS · 088265 · LICENSED PROFESSIONAL ENGINEER

CONTRACT:
HVAC

TITLE:
ABATE HAZARDOUS MATERIALS & RENOVATE BUILDING NO. 4

LOCATION:
STATE OFFICE BUILDING CAMPUS
1220 WASHINGTON AVE.
ALBANY, NY 12226

CLIENT:
OFFICE OF GENERAL SERVICES

KEY PLAN:
A B C

MARK	DATE	DESCRIPTION
1	08/26/16	ADDENDUM 1
	07/11/16	BID DOCUMENT

PROJECT NUMBER:	45124 - H
DESIGNED BY:	FG, P.E.
DRAWN BY:	AK
FIELD CHECK:	Checker
APPROVED:	Approver
SCALE:	As indicated

SHEET TITLE:
HVAC SECOND FLOOR HW PIPING PLAN B

DRAWING NUMBER:
M-222

SHEET OF

9/16/2016 12:01:07 PM
36624 PLOT SHEET

GENERAL SHEET NOTES

1. PIPE SIZES NOT LABELED ARE 3/4"
2. ISOLATION, ISOLATION/BALANCING VALVE TO BE PROVIDED AT EACH SUPPLY AND RETURN BRANCH TAKE OFF RESPECTIVELY.
3. THE TOTAL ELEMENT LENGTHS SHOWN FOR EACH BAY, SHOULD BE PROVIDED IN LENGTHS NOT TO EXCEED 1'-0" LESS THAN DISTANCE BETWEEN SUPPORTS.

REVISED DRAWING
09/15/16

9/16/2016 11:18:01 AM
3902-M FLOR SHEET

NEW YORK STATE OF OPPORTUNITY. Office of General Services

DESIGN & CONSTRUCTION

CONSULTANT

STV 100 Years

225 Park Avenue South
New York, NY 10003
t 212.777.4400 f 212.529.5237
www.stvinc.com

LI SALTZMAN ARCHITECTS, P.C.
ARCHITECTURE AND PRESERVATION

WARNING:
THE ALTERATION OF THIS MATERIAL IN ANY WAY, UNLESS DONE UNDER THE DIRECTION OF A COMPARABLE PROFESSIONAL, I.E. ARCHITECT FOR AN ARCHITECT, ENGINEER FOR AN ENGINEER, OR LANDSCAPE ARCHITECT FOR A LANDSCAPE ARCHITECT, IS A VIOLATION OF THE NEW YORK STATE EDUCATION LAW AND/OR REGULATIONS AND IS A CLASS 'A' MISDEMEANOR.

N

STATE OF NEW YORK · CLARE XINYAN PHILLIPS · 088265 · LICENSED PROFESSIONAL ENGINEER

CONTRACT:
HVAC

TITLE:
ABATE HAZARDOUS MATERIALS & RENOVATE BUILDING NO. 4

LOCATION:
STATE OFFICE BUILDING CAMPUS
1220 WASHINGTON AVE.
ALBANY, NY 12226

CLIENT:
OFFICE OF GENERAL SERVICES

KEY PLAN:

A B C

MARK	DATE	DESCRIPTION
1	08/26/16	ADDENDUM 1
	07/11/16	BID DOCUMENT

PROJECT NUMBER:	45124 - H
DESIGNED BY:	FG, P.E.
DRAWN BY:	AK
FIELD CHECK:	Checker
APPROVED:	Approver
SCALE:	As indicated

SHEET TITLE:
HVAC THIRD FLOOR HW PIPING PLAN B

DRAWING NUMBER:
M-232

SHEET OF

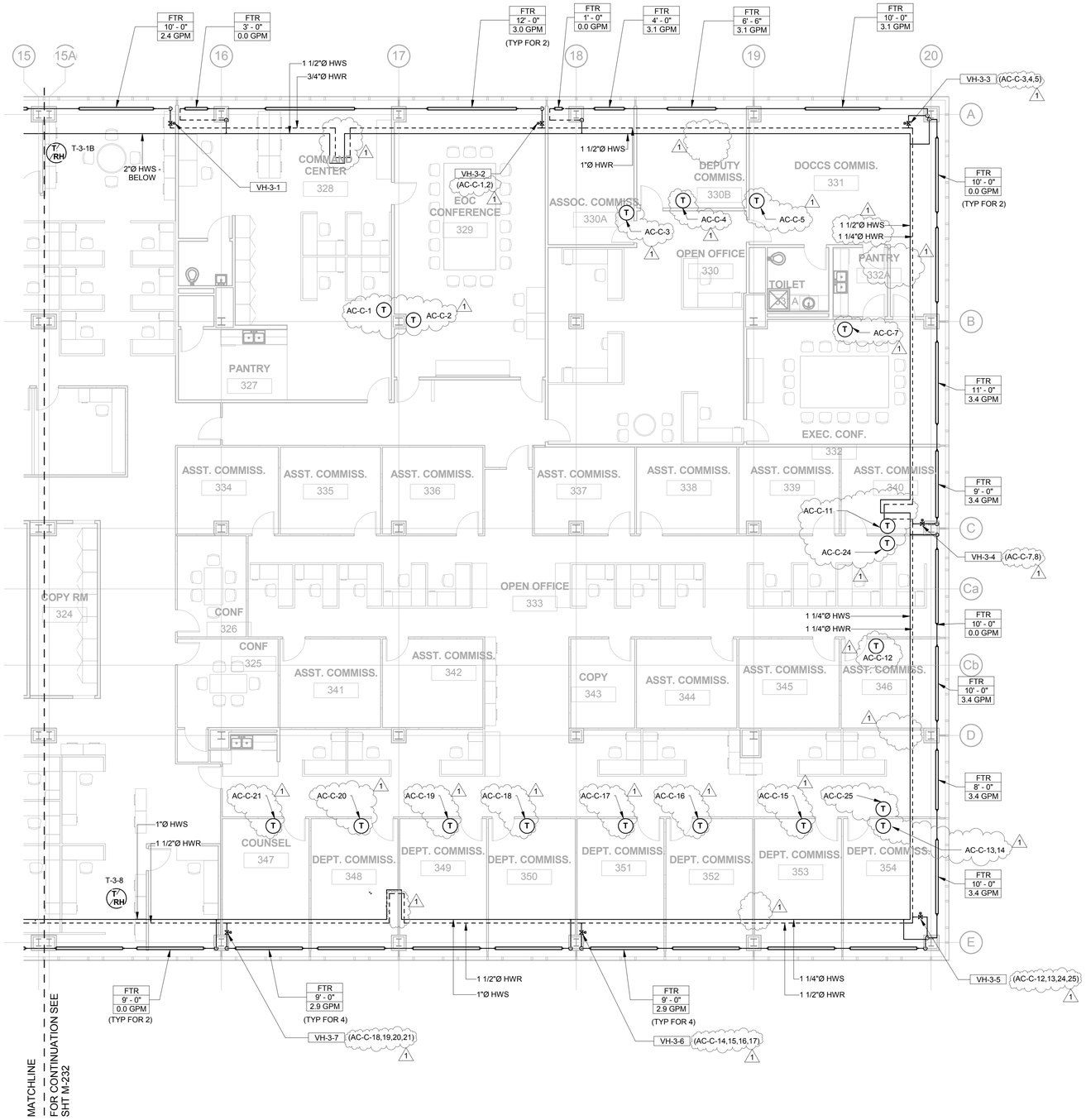

GENERAL SHEET NOTES

1. PIPE SIZES NOT LABELED ARE 3/4"
2. ISOLATION, ISOLATION/BALANCING VALVE TO BE PROVIDED AT EACH SUPPLY AND RETURN BRANCH TAKE OFF RESPECTIVELY.
3. THE TOTAL ELEMENT LENGTHS SHOWN FOR EACH BAY, SHOULD BE PROVIDED IN LENGTHS NOT TO EXCEED 1'-0" LESS THAN DISTANCE BETWEEN SUPPORTS.

REVISED DRAWING
09/15/16

NEW YORK STATE OF OPPORTUNITY. Office of General Services

DESIGN & CONSTRUCTION

CONSULTANT

STV 100 Years

225 Park Avenue South
New York, NY 10003
t 212.777.4400 f 212.529.5237
www.stvinc.com

LI SALTZMAN ARCHITECTS, P.C.
ARCHITECTURE AND PRESERVATION

WARNING:
THE ALTERATION OF THIS MATERIAL IN ANY WAY, UNLESS DONE UNDER THE DIRECTION OF A COMPARABLE PROFESSIONAL, I.E. ARCHITECT FOR AN ARCHITECT, ENGINEER FOR AN ENGINEER, OR LANDSCAPE ARCHITECT FOR A LANDSCAPE ARCHITECT, IS A VIOLATION OF THE NEW YORK STATE EDUCATION LAW AND/OR REGULATIONS AND IS A CLASS 'A' MISDEMEANOR.

N

STATE OF NEW YORK · CLAIRE XINYAN PHILLIPS · 088265 · LICENSED PROFESSIONAL ENGINEER

CONTRACT:
HVAC

TITLE:
ABATE HAZARDOUS MATERIALS & RENOVATE BUILDING NO. 4

LOCATION:
STATE OFFICE BUILDING CAMPUS
1220 WASHINGTON AVE.
ALBANY, NY 12226

CLIENT:
OFFICE OF GENERAL SERVICES

KEY PLAN:

A	B	C

MARK	DATE	DESCRIPTION
1	08/26/16	ADDENDUM 1
	07/11/16	BID DOCUMENT

PROJECT NUMBER:	45124 - H
DESIGNED BY:	FG, P.E.
DRAWN BY:	AK
FIELD CHECK:	Checker
APPROVED:	Approver
SCALE:	As indicated

SHEET TITLE:
HVAC THIRD FLOOR HW PIPING PLAN C

DRAWING NUMBER:
M-233

SHEET OF

9/16/2016 11:18:04 AM
38624 PLOT SHEET

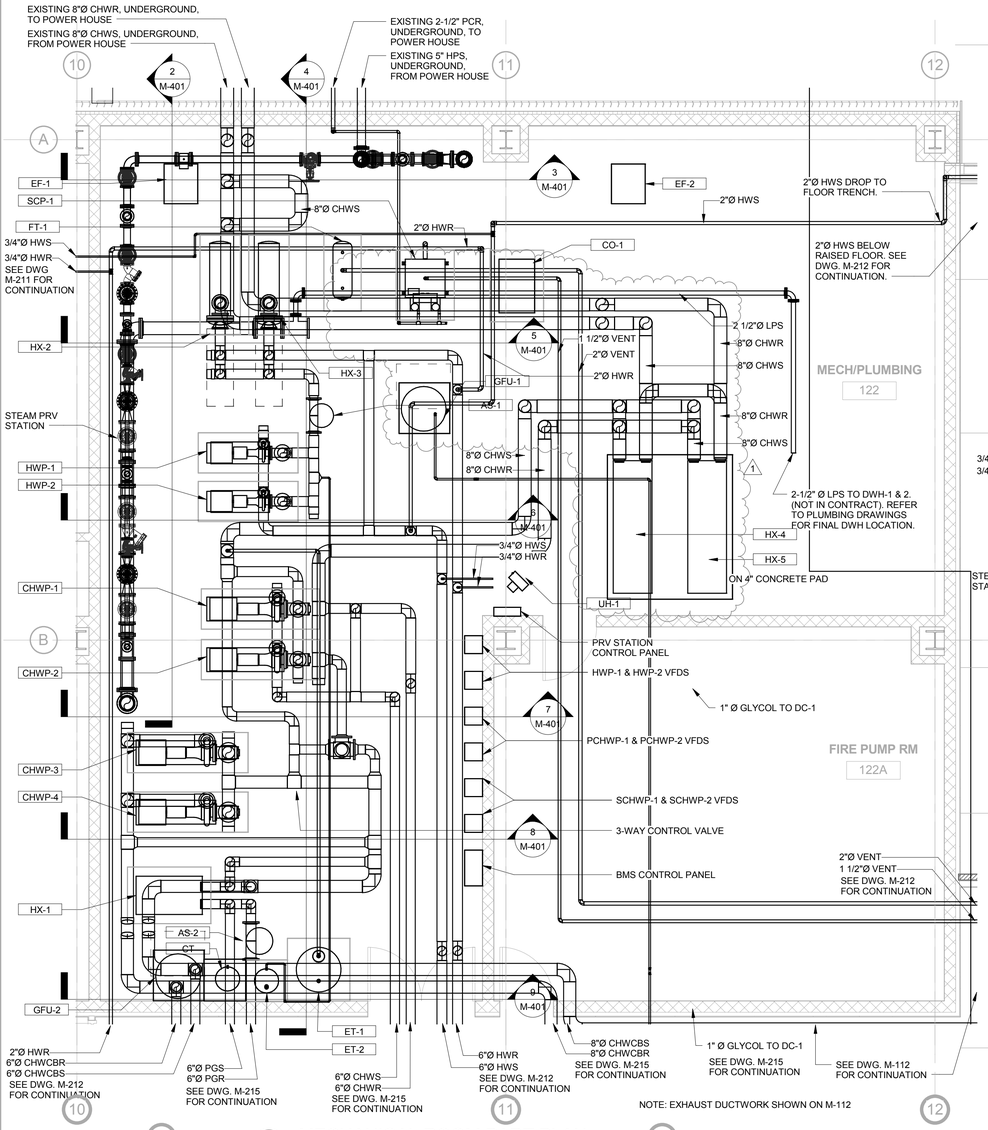

1 M-401 MECHANICAL ROOM PART PLAN
1/4" = 1'-0"

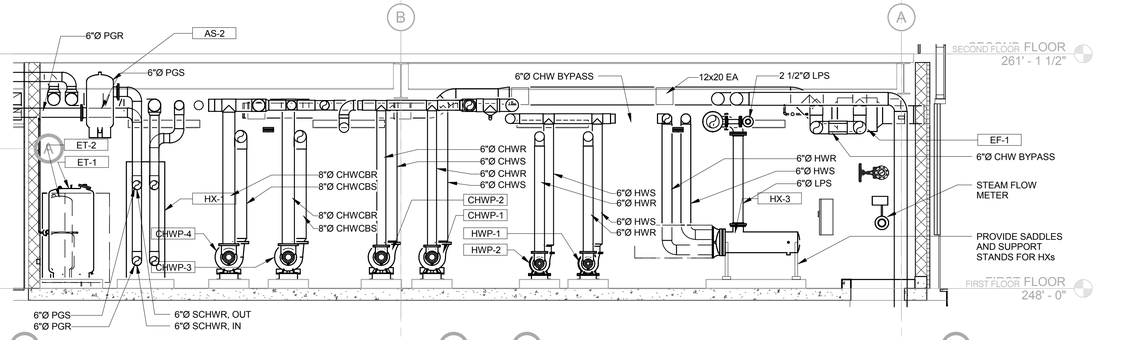

4 M-401 MECH RM SECTION - 1
1/4" = 1'-0"

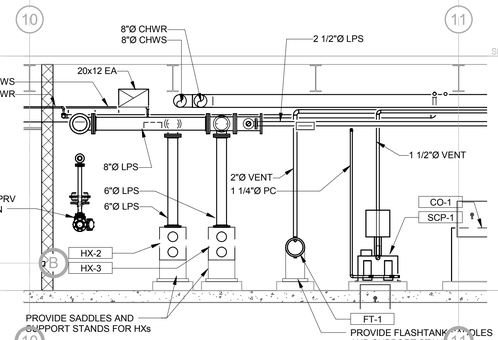

5 M-401 MECH RM SECTION - 2
1/4" = 1'-0"

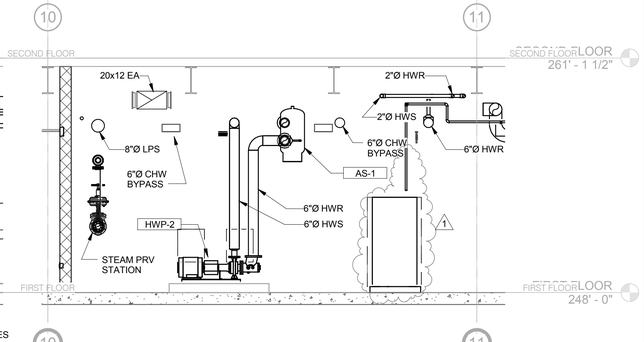

6 M-401 MECH RM SECTION - 3
1/4" = 1'-0"

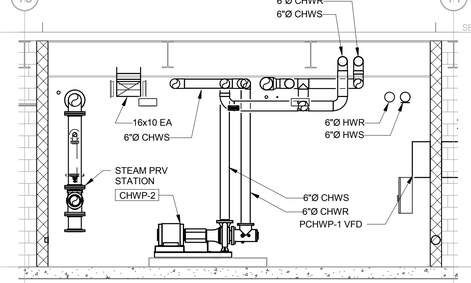

7 M-401 MECH RM SECTION - 4
1/4" = 1'-0"

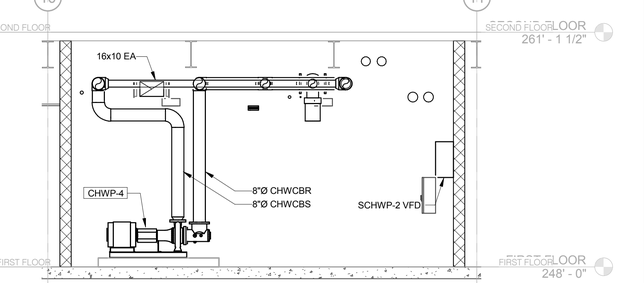

8 M-401 MECH RM SECTION - 5
1/4" = 1'-0"

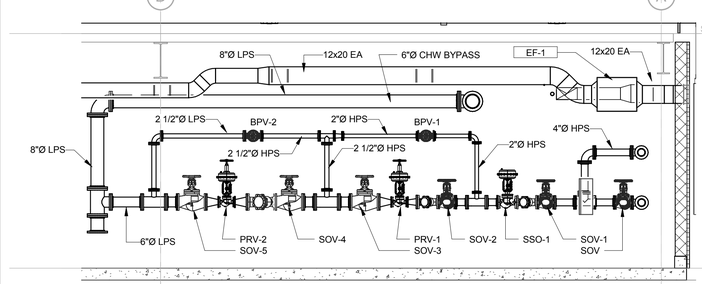

NOTE: PROVIDE PRV STATION ANCHORS AND SUPPORTS.

2 M-401 PRV STATION SECTION - WEST
1/4" = 1'-0"

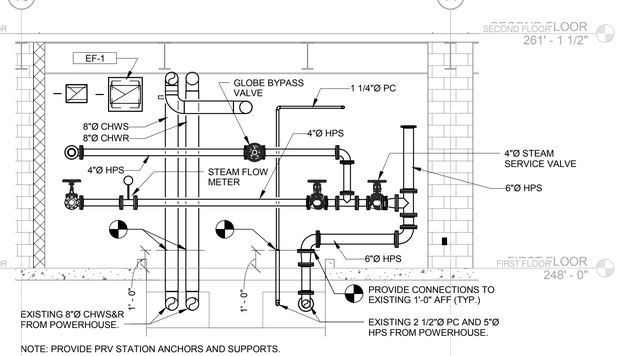

NOTE: PROVIDE PRV STATION ANCHORS AND SUPPORTS.

3 M-401 PRV STATION SECTION - NORTH
1/4" = 1'-0"

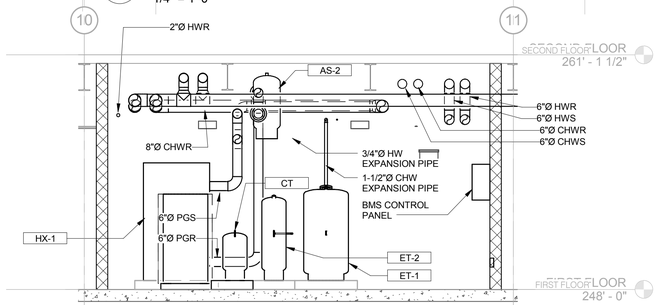

9 M-401 MECH RM SECTION - 6
1/4" = 1'-0"

GENERAL SHEET NOTES

1. PROVIDE ALL CONDENSATE PIPING, VALVES, FITTINGS AND TRAPS THAT ARE NOT SHOWN ON THE FLOOR PLANS BUT REQUIRED FOR A COMPLETE SYSTEM AS INDICATED ON "HVAC HOT WATER GENERATION DIAGRAM" M-601.

REVISED DRAWING
09/15/16

NEW YORK STATE OF OPPORTUNITY. Office of General Services
DESIGN & CONSTRUCTION

CONSULTANT

STV 100 Years
225 Park Avenue South
New York, NY 10003
t 212.777.4400 f 212.529.5237
www.stvinc.com

LI SALTZMAN ARCHITECTS, P.C.
ARCHITECTURE AND PRESERVATION

WARNING:
THE ALTERATION OF THIS MATERIAL IN ANY WAY, UNLESS DONE UNDER THE DIRECTION OF A COMPARABLE PROFESSIONAL, I.E. ARCHITECT FOR AN ARCHITECT, ENGINEER FOR AN ENGINEER, OR LANDSCAPE ARCHITECT FOR A LANDSCAPE ARCHITECT, IS A VIOLATION OF THE NEW YORK STATE EDUCATION LAW AND/OR REGULATIONS AND IS A CLASS 'A' MISDEMEANOR.

N

STATE OF NEW YORK · CLAIE NINYAN PHILLIPS · 088265 · LICENSED PROFESSIONAL ENGINEER

CONTRACT: HVAC

TITLE: ABATE HAZARDOUS MATERIALS & RENOVATE BUILDING NO. 4

LOCATION: STATE OFFICE BUILDING CAMPUS
1220 WASHINGTON AVE.
ALBANY, NY 12226

CLIENT: OFFICE OF GENERAL SERVICES

KEY PLAN:

MARK	DATE	DESCRIPTION
1	08/26/16	ADDENDUM 1
	07/11/16	BID DOCUMENT

PROJECT NUMBER:	45124 - H
DESIGNED BY:	FG, P.E.
DRAWN BY:	AK
FIELD CHECK:	Checker
APPROVED:	Approver
SCALE:	As indicated

SHEET TITLE:
HVAC ENLARGED PART PLANS - 1

DRAWING NUMBER:
M-401

SHEET OF

9/16/2016 11:19:42 AM
S90624 FLO1 SHEET 1

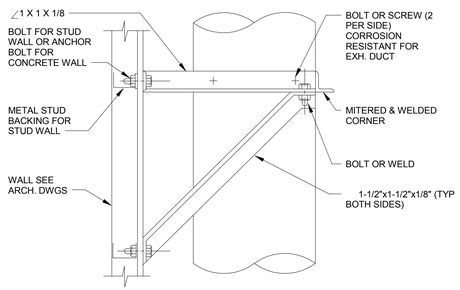

1 M-502 VERTICAL DUCT SUPPORT

NTS

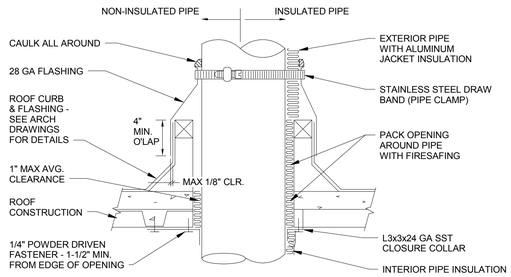

NOTES:

1. PROVIDE ALUMINUM FLASHING AND FASTENERS FOR INSULATED INSTALLATION. PROVIDE INDEPENDENT SUPPORT ABOVE OR BELOW ROOF PER SMACNA CONSTRUCTION STANDARDS.
2. FOR METAL ROOF DECK EXTEND LOWER ANGLE CLOSURE COLLAR AND PROVIDE CLOSURE STRIPS TO SEAL COLLAR TO FLUTED SURFACE. WHERE ROOF CONSTRUCTION DOES NOT ALLOW FOR ROUND OPENING PROVIDE SHEET METAL CLOSURE PIECES FASTENED AND SEALED TO ROOF DECK.

5 M-502 PIPE ROOF PENETRATION

NTS

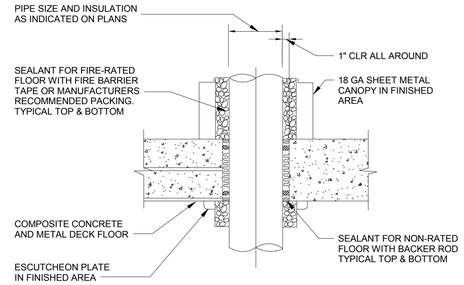

NOTES:

1. USED FOR RATED OR NON-FIRE RATED FLOORS, DRY LOCATIONS, CORE DRILLED HOLES WITHOUT SLEEVES, FOR HYDRONIC PIPING.
2. SEE SPECS SEALERS AND ARCHITECTURAL DETAILS AND SPECIFICATIONS FOR ADDITIONAL REQUIREMENTS
3. FOR VIBRATION ISOLATED PIPING PROVIDE RTV FOAM. PUTTY NOT ALLOWED. FOR INDIVIDUAL PIPES, PROVIDE SEALANT INDICATED ABOVE.

7 M-502 PIPE FLOOR PENETRATION - DRY AREA

NTS

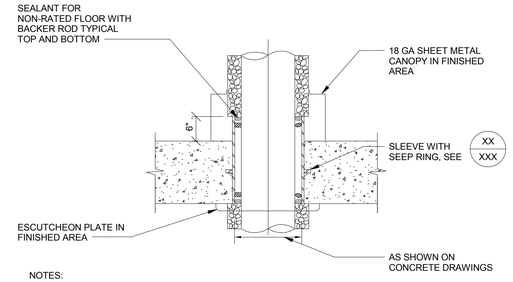

NOTES:

1. USED FOR NON-FIRE RATED FLOORS, WET LOCATIONS, CAST IN PLACE FLOOR SLEEVES WITH HYDRONIC PIPING.
2. SEE SPECS FOR SEALERS AND ARCHITECTURAL DETAILS AND SPECIFICATIONS FOR ADDITIONAL REQUIREMENTS.
3. RISER CLAMPS OR WELDED LUGS ALLOWED, MAX 500 LBS.

9 M-502 NON FIRE RATED FLR. PIPE PENETRATION WET AREA WITH PRECAST SLEEVE

NTS

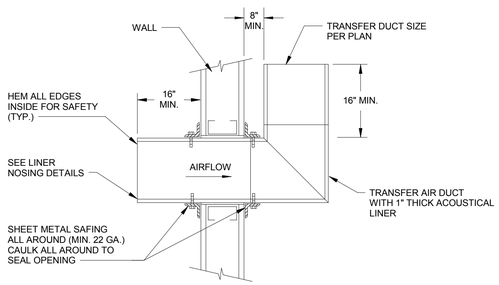

2 M-502 TRANSFER ELBOW

NTS

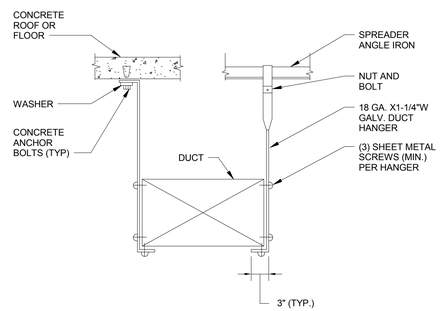

3 M-502 RECTANGULAR DUCT SUPPORT - UP TO 48"

NTS

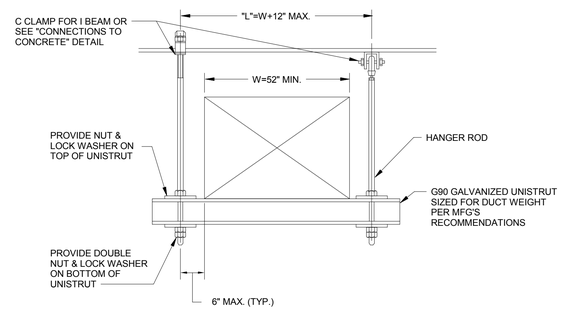

4 M-502 RECTAGULAR DUCT SUPPORT - 48" AND UP

NTS

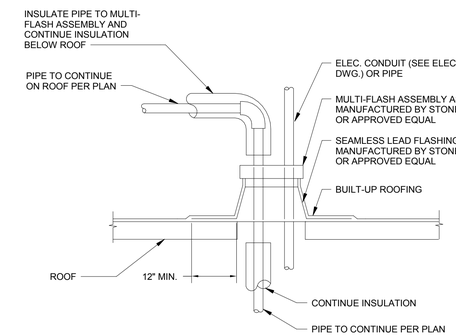

11 M-502 MULTIPLE PIPE THROUGH ROOF

NTS

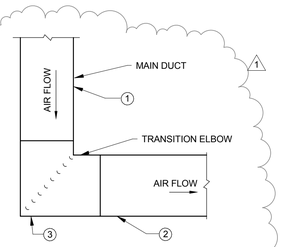

NOTES:

PROVIDE RECTANGULAR ELBOW WITH TURNING VANES WHERE RADIUS ELBOW NOT POSSIBLE

1. INLET DUCT SIZE PER PLAN.
2. OUTLET DUCT SIZE PER PLAN.
3. WHEN OUTLET DOES NOT EQUAL INLET OF ELBOW, PROVISIONS SHALL BE MADE TO ADJUST VANE RADIUS AND ANGLE OF ENTRY AND EXIT TO SUIT ELBOW CONSTRUCTION. QUANTITY OF VANES SHALL BE REDUCED AS NECESSARY TO ACHIEVE APPROPRIATE VANE SIZES AND SPACING. REFER TO SMACNA FIGURES 4-2 AND 4-3 FOR ADDITIONAL INFORMATION.

6 M-502 RECTANGULAR ELBOW WITH TURNING VANES

NTS

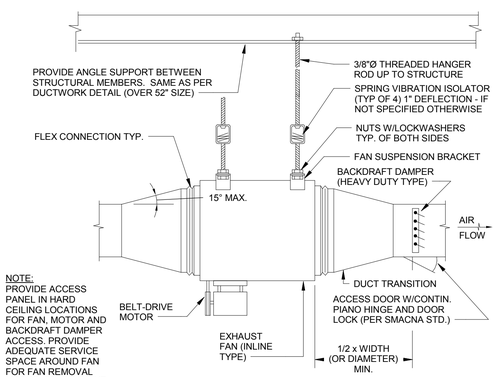

NOTE:
PROVIDE ACCESS PANEL IN HARD CEILING LOCATIONS FOR FAN, MOTOR AND BACKDRAFT DAMPER ACCESS. PROVIDE ADEQUATE SERVICE SPACE AROUND FAN FOR FAN REMOVAL MOTOR, BELT & DRIVE ACCESS.

8 M-502 INLINE EXHAUST FAN

NTS

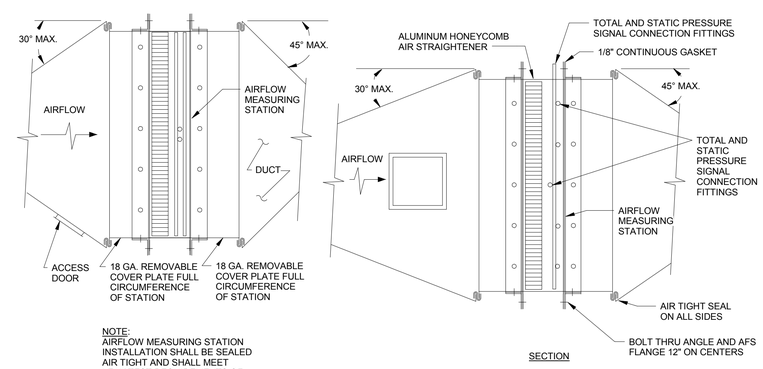

NOTE:
AIRFLOW MEASURING STATION INSTALLATION SHALL BE SEALED AIR TIGHT AND SHALL MEET LEAK TEST REQUIREMENTS OF DUCTWORK CONNECTING TO AIRFLOW MEASURING STATION.

10 M-502 AIR FLOW MEASURING STATION DETAIL

NTS

REVISED DRAWING
09/15/16

9/16/2016 11:19:46 AM
90624 PLOT SHEET

NEW YORK STATE OF OPPORTUNITY. Office of General Services

DESIGN & CONSTRUCTION

CONSULTANT

STV 100 Years

225 Park Avenue South
New York, NY 10003
t 212.777.4400 f 212.529.5237
www.stvinc.com

LI SALTZMAN ARCHITECTS, P.C.
ARCHITECTURE AND PRESERVATION

WARNING:
THE ALTERATION OF THIS MATERIAL IN ANY WAY, UNLESS DONE UNDER THE DIRECTION OF A COMPARABLE PROFESSIONAL, I.E. ARCHITECT FOR AN ARCHITECT, ENGINEER FOR AN ENGINEER, OR LANDSCAPE ARCHITECT FOR A LANDSCAPE ARCHITECT, IS A VIOLATION OF THE NEW YORK STATE EDUCATION LAW AND/OR REGULATIONS AND IS A CLASS 'A' MISDEMEANOR.

N

STATE OF NEW YORK · CLARE XINYAN PHILLIPS · 088265 · LICENSED PROFESSIONAL ENGINEER

CONTRACT:
HVAC

TITLE:
ABATE HAZARDOUS MATERIALS & RENOVATE BUILDING NO. 4

LOCATION:
STATE OFFICE BUILDING CAMPUS
1220 WASHINGTON AVE.
ALBANY, NY 12226

CLIENT:
OFFICE OF GENERAL SERVICES

KEY PLAN:

MARK	DATE	DESCRIPTION
1	08/26/16	ADDENDUM 1
	07/11/16	BID DOCUMENT

PROJECT NUMBER:	45124 - H
DESIGNED BY:	FG, P.E.
DRAWN BY:	AK
FIELD CHECK:	Checker
APPROVED:	Approver
SCALE:	NTS

SHEET TITLE:
HVAC DETAILS - 2

DRAWING NUMBER:
M-502

SHEET OF

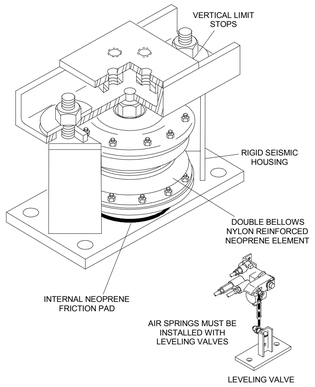

ISOLATION DEFLECTION IN(MM)
1.5(38)

SLR AIR SPRING MOUNT

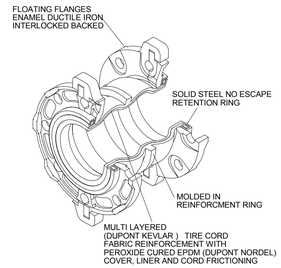

SFDEJ MOLDED EXPANSION JOINT

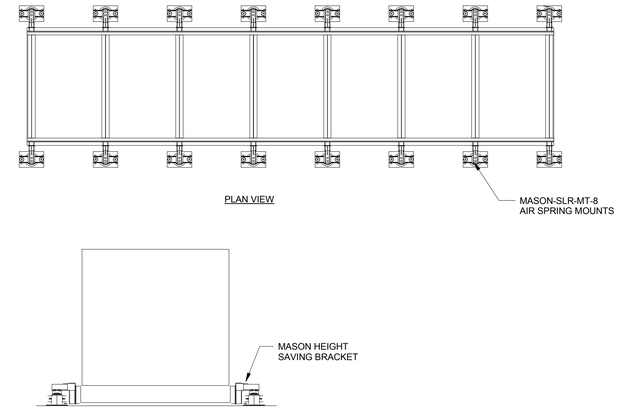

ISOLATION DEFLECTION IN(MM)
1.5(38)

AIR SPRING MOUNTS WITH HEIGHT SAVING BRACKETS WF TYPE STEEL FRAME

2 M-511 VIBRATION ISOLATION DETAILS - AIR COOLED CHILLER
NTS

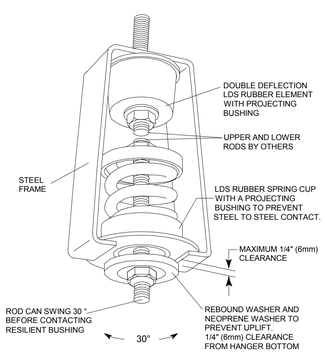

ISOLATION DEFLECTION IN(MM)
1.5(38)

30N SPRING AND NEOPRENE HANGER WITH REBOUND WASHER

1 M-511 VIBRATION ISOLATION DETAILS - CEILING MOUNTED FAN COIL UNITS, FAN, UNIT HEATER
NTS

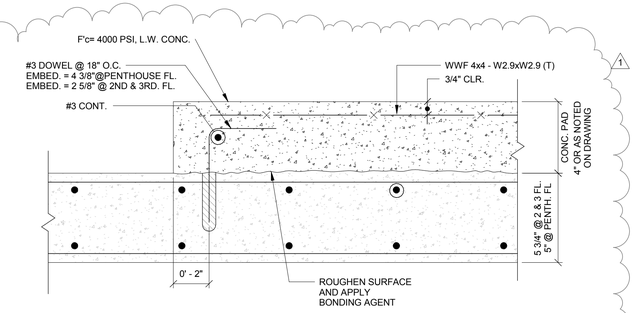

NOTE: PADS SHALL BE 6" LARGER THAN THE MOUNTED EQUIPMENT ON ALL SIDES.

3 M-511 TYPICAL SECTION AT HOUSKEEPING PAD
NTS

REVISED DRAWING
09/15/16

NEW YORK STATE OF OPPORTUNITY. Office of General Services

DESIGN & CONSTRUCTION

CONSULTANT

STV 100 Years

225 Park Avenue South
New York, NY 10003
t 212.777.4400 f 212.529.5237
www.stvinc.com

LI SALTZMAN ARCHITECTS, P.C.
ARCHITECTURE AND PRESERVATION

WARNING:
THE ALTERATION OF THIS MATERIAL IN ANY WAY, UNLESS DONE UNDER THE DIRECTION OF A COMPARABLE PROFESSIONAL, I.E. ARCHITECT FOR AN ARCHITECT, ENGINEER FOR AN ENGINEER, OR LANDSCAPE ARCHITECT FOR A LANDSCAPE ARCHITECT, IS A VIOLATION OF THE NEW YORK STATE EDUCATION LAW AND/OR REGULATIONS AND IS A CLASS 'A' MISDEMEANOR.

N

STATE OF NEW YORK · CLARE KINYAN PHILLIPS · 088265 · LICENSED PROFESSIONAL ENGINEER

CONTRACT:
HVAC

TITLE:
ABATE HAZARDOUS MATERIALS & RENOVATE BUILDING NO. 4

LOCATION:
STATE OFFICE BUILDING CAMPUS
1220 WASHINGTON AVE.
ALBANY, NY 12226

CLIENT:
OFFICE OF GENERAL SERVICES

KEY PLAN:

MARK	DATE	DESCRIPTION
1	08/26/16	ADDENDUM 1
	07/11/16	BID DOCUMENT

PROJECT NUMBER:	45124 - H
DESIGNED BY:	Designer
DRAWN BY:	Author
FIELD CHECK:	Checker
APPROVED:	Approver
SCALE:	As indicated

SHEET TITLE:
HVAC DETAILS - 11

DRAWING NUMBER:
M-511

SHEET OF

9/16/2016 11:20:03 AM
3/8/24 PLOT SHEET 1

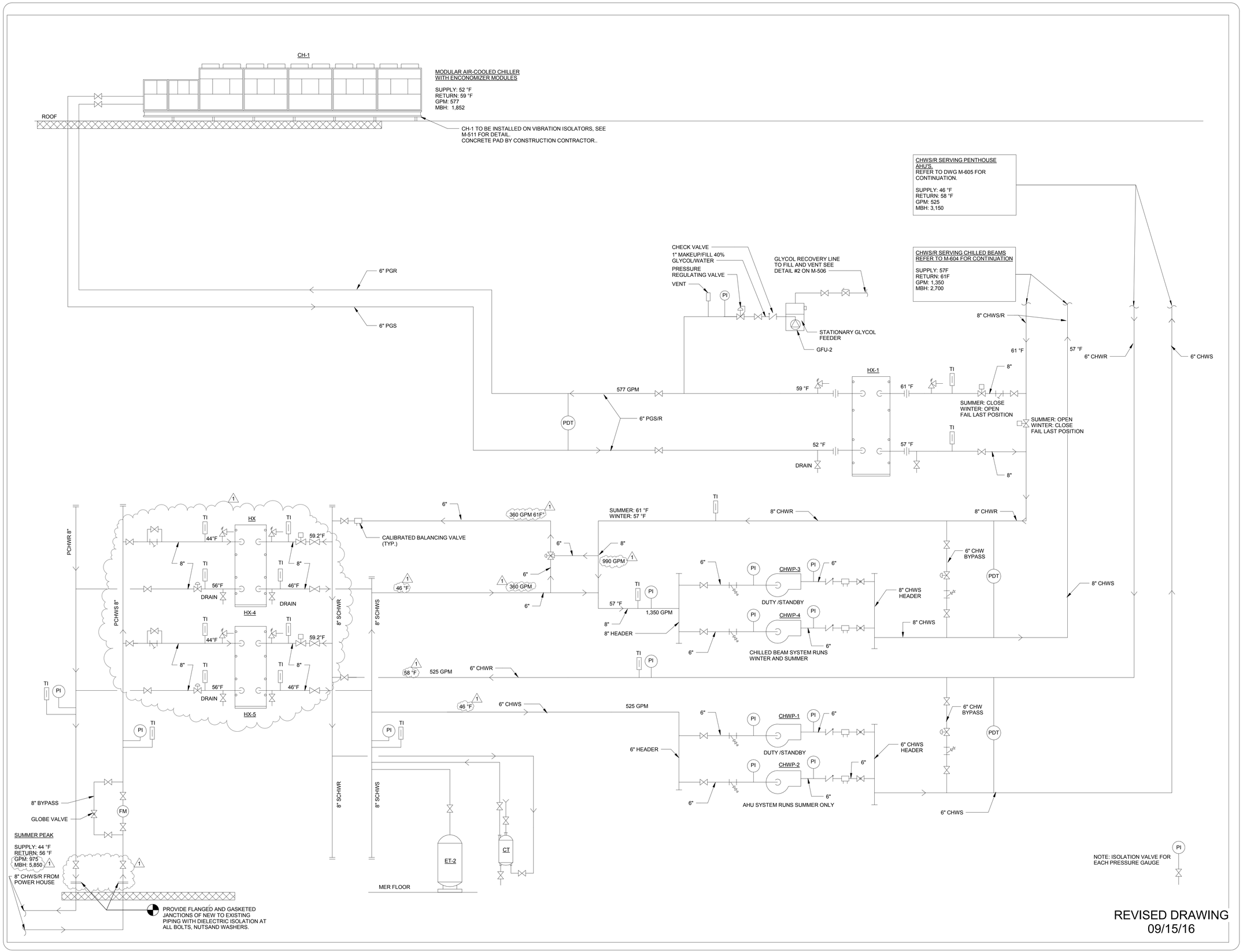

9/16/2016 11:20:08 AM
J:\62X\45124\01 SHEET

NEW YORK STATE OF OPPORTUNITY. Office of General Services

DESIGN & CONSTRUCTION

CONSULTANT

STV 100 Years

225 Park Avenue South
New York, NY 10003
t 212.777.4400 f 212.529.5237
www.stvinc.com

LI SALTZMAN ARCHITECTS, P.C.
ARCHITECTURE AND PRESERVATION

WARNING:
THE ALTERATION OF THIS MATERIAL IN ANY WAY, UNLESS DONE UNDER THE DIRECTION OF A COMPARABLE PROFESSIONAL, I.E. ARCHITECT FOR AN ARCHITECT, ENGINEER FOR AN ENGINEER, OR LANDSCAPE ARCHITECT FOR A LANDSCAPE ARCHITECT, IS A VIOLATION OF THE NEW YORK STATE EDUCATION LAW AND/OR REGULATIONS AND IS A CLASS 'A' MISDEMEANOR.

N

STATE OF NEW YORK · CLARE XINYAN PHILLIPS · 088265 · LICENSED PROFESSIONAL ENGINEER

CONTRACT:
HVAC

TITLE:
ABATE HAZARDOUS MATERIALS & RENOVATE BUILDING NO. 4

LOCATION:
STATE OFFICE BUILDING CAMPUS
1220 WASHINGTON AVE.
ALBANY, NY 12226

CLIENT:
OFFICE OF GENERAL SERVICES

KEY PLAN:

MARK	DATE	DESCRIPTION
1	08/26/16	ADDENDUM 1
	07/11/16	BID DOCUMENT

PROJECT NUMBER:	45124 - H
DESIGNED BY:	Designer
DRAWN BY:	Author
FIELD CHECK:	Checker
APPROVED:	Approver
SCALE:	12" = 1'-0"

SHEET TITLE:
HVAC CHILLED WATER GENERATION FLOW DIAGRAM

DRAWING NUMBER:
M-602

SHEET OF

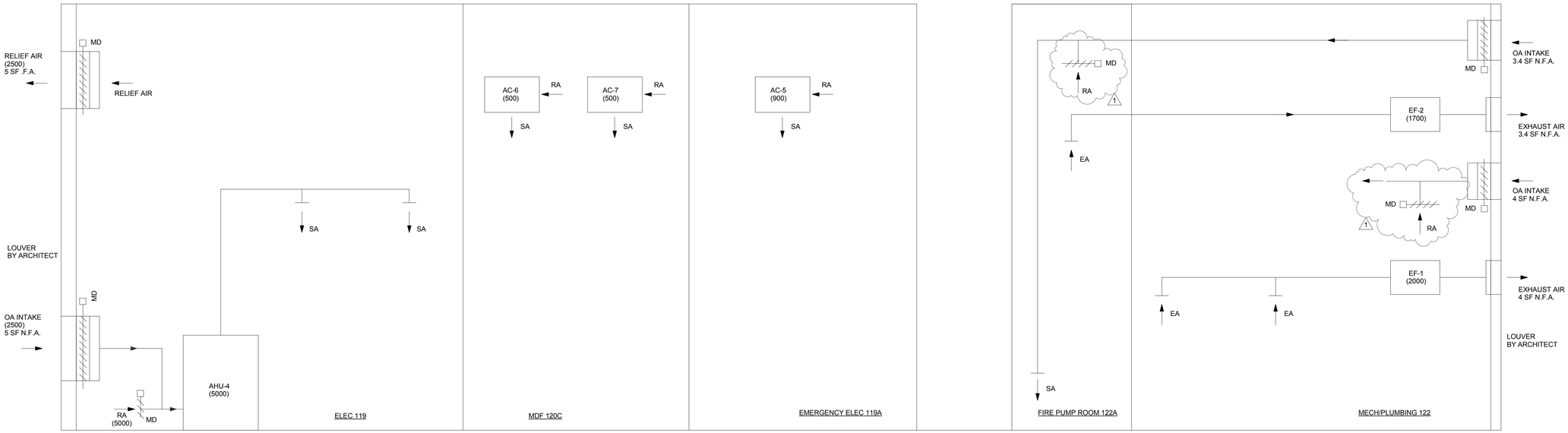

1 M-609 HVAC MECHANICAL ROOM AIR FLOW DIAGRAM

12" = 1'-0"

REVISED DRAWING
09/15/16

NEW YORK STATE OF OPPORTUNITY. Office of General Services

DESIGN & CONSTRUCTION

CONSULTANT

STV 100 Years

225 Park Avenue South
New York, NY 10003
t 212.777.4400 f 212.529.5237
www.stvinc.com

LI SALTZMAN ARCHITECTS, P.C.
ARCHITECTURE AND PRESERVATION

WARNING:
THE ALTERATION OF THIS MATERIAL IN ANY WAY, UNLESS DONE UNDER THE DIRECTION OF A COMPARABLE PROFESSIONAL, I.E. ARCHITECT FOR AN ARCHITECT, ENGINEER FOR AN ENGINEER, OR LANDSCAPE ARCHITECT FOR A LANDSCAPE ARCHITECT, IS A VIOLATION OF THE NEW YORK STATE EDUCATION LAW AND/OR REGULATIONS AND IS A CLASS 'A' MISDEMEANOR.

N

STATE OF NEW YORK · CLAIRE KINYAN PHILLIPS · 088265 · LICENSED PROFESSIONAL ENGINEER

CONTRACT:
HVAC

TITLE:
ABATE HAZARDOUS MATERIALS & RENOVATE BUILDING NO. 4

LOCATION:
STATE OFFICE BUILDING CAMPUS
1220 WASHINGTON AVE.
ALBANY, NY 12226

CLIENT:
OFFICE OF GENERAL SERVICES

KEY PLAN:

MARK	DATE	DESCRIPTION
1	08/26/16	ADDENDUM 1
	07/11/16	BID DOCUMENT

PROJECT NUMBER:	45124 - H
DESIGNED BY:	Designer
DRAWN BY:	Author
FIELD CHECK:	Checker
APPROVED:	Approver
SCALE:	12" = 1'-0"

SHEET TITLE:
HVAC AIRFLOW DIAGRAM_2

DRAWING NUMBER:
M-609

SHEET OF

9/22/2016 10:19:34 AM
38624 PLOT SHEET

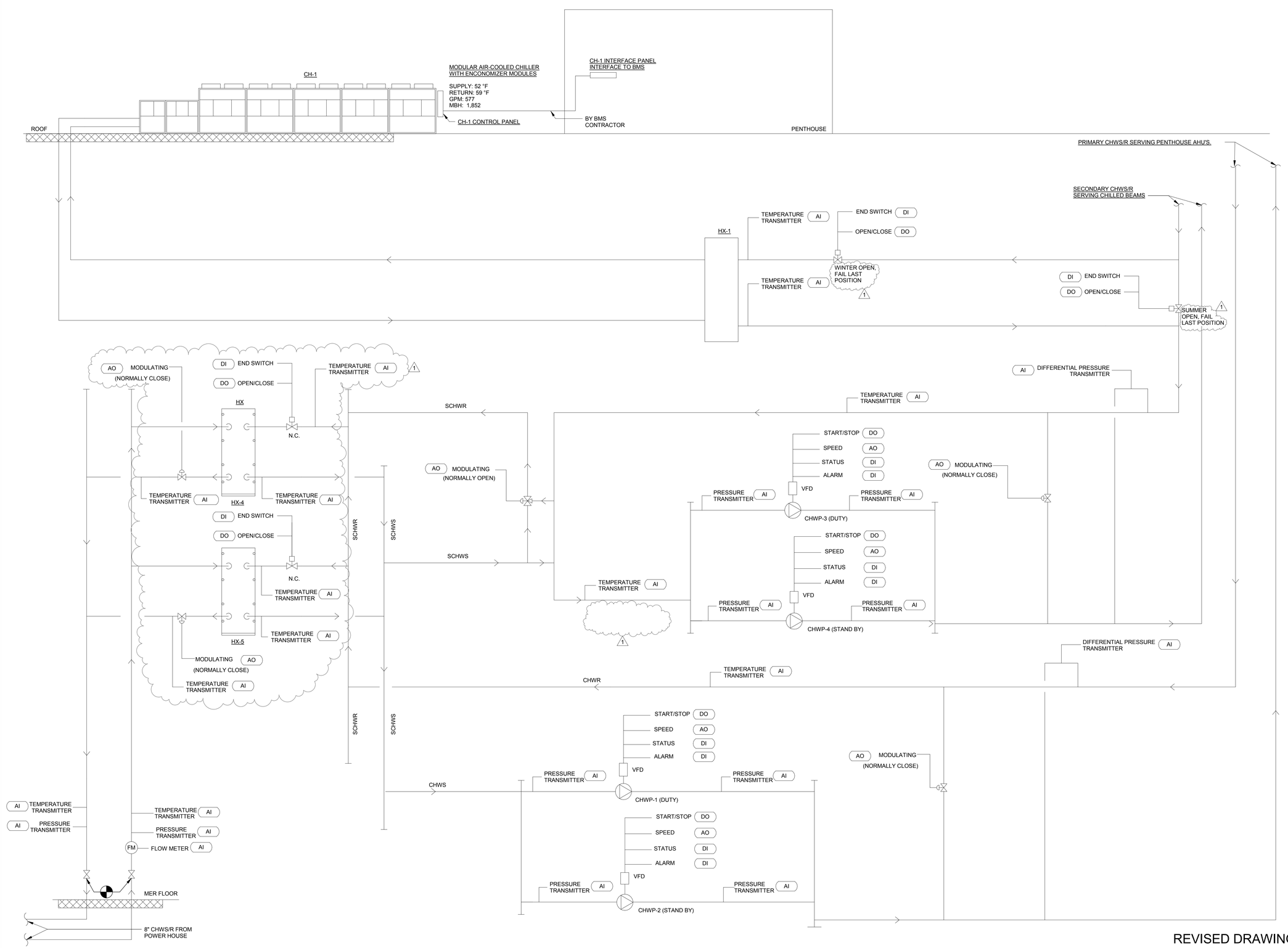

9/16/2016 11:20:20 AM
3M624 FLO1 SHEET

NEW YORK STATE OF OPPORTUNITY. Office of General Services

DESIGN & CONSTRUCTION

CONSULTANT

STV 100 Years

225 Park Avenue South
New York, NY 10003
t 212.777.4400 f 212.529.5237
www.stvinc.com

LI SALTZMAN ARCHITECTS, P.C.
ARCHITECTURE AND PRESERVATION

WARNING:
THE ALTERATION OF THIS MATERIAL IN ANY WAY, UNLESS DONE UNDER THE DIRECTION OF A COMPARABLE PROFESSIONAL, I.E. ARCHITECT FOR AN ARCHITECT, ENGINEER FOR AN ENGINEER, OR LANDSCAPE ARCHITECT FOR A LANDSCAPE ARCHITECT, IS A VIOLATION OF THE NEW YORK STATE EDUCATION LAW AND/OR REGULATIONS AND IS A CLASS 'A' MISDEMEANOR.

N

STATE OF NEW YORK · CARE XINYAN PHILIPS · 088265 · LICENSED PROFESSIONAL ENGINEER

CONTRACT:
HVAC

TITLE:
ABATE HAZARDOUS MATERIALS & RENOVATE BUILDING NO. 4

LOCATION:
STATE OFFICE BUILDING CAMPUS
1220 WASHINGTON AVE.
ALBANY, NY 12226

CLIENT:
OFFICE OF GENERAL SERVICES

KEY PLAN:

MARK	DATE	DESCRIPTION
1	08/26/16	ADDENDUM 1
	07/11/16	BID DOCUMENT

PROJECT NUMBER:	45124 - H
DESIGNED BY:	FG, P.E.
DRAWN BY:	AK
FIELD CHECK:	Checker
APPROVED:	Approver
SCALE:	12" = 1'-0"

SHEET TITLE:
HVAC CHILLED WATER CONTROL DIAGRAM

DRAWING NUMBER:
M-703

SHEET OF

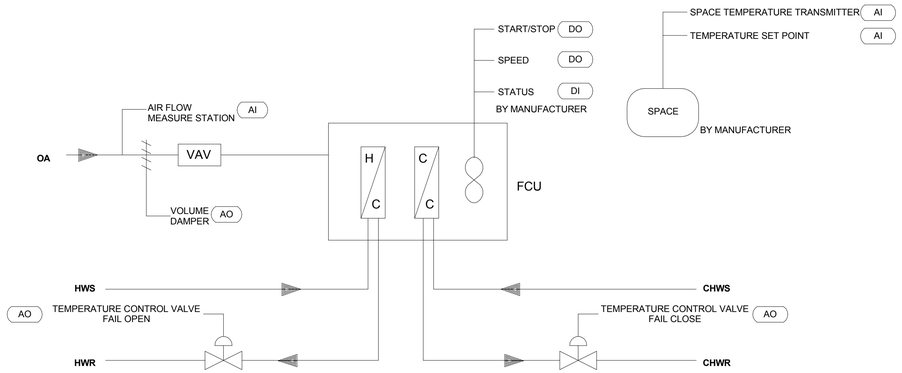

1 M-707 FAN COIL UNIT CONTROL DIAGRAM (LOBBY)
NTS

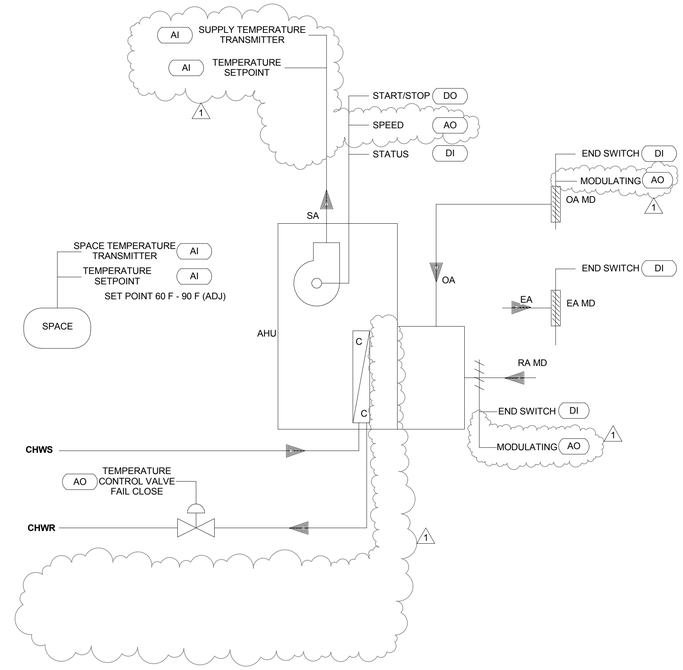

2 M-707 MAIN ELECTRICAL ROOM AHU-4 CONTROL DIAGRAM
NTS

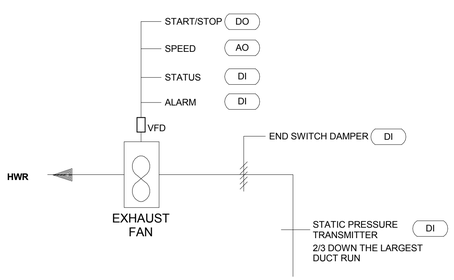

3 M-707 MISC. EXHAUST AIR FAN CONTROL DIAGRAM
NTS

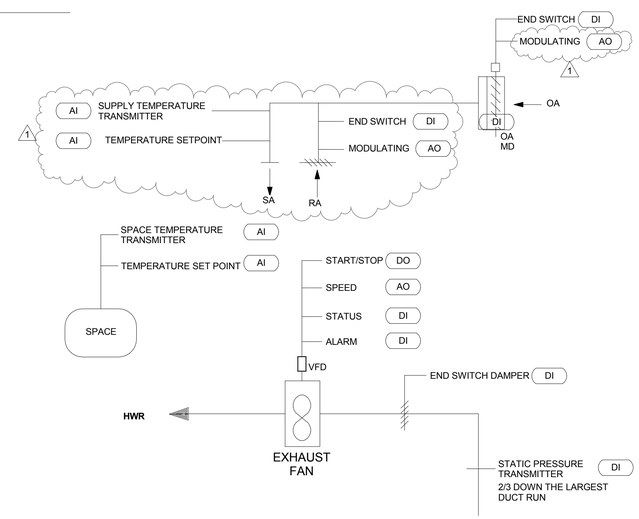

4 M-707 MER EXHAUST FAN CONTROL DIAGRAM (EF-1, 2)
NTS

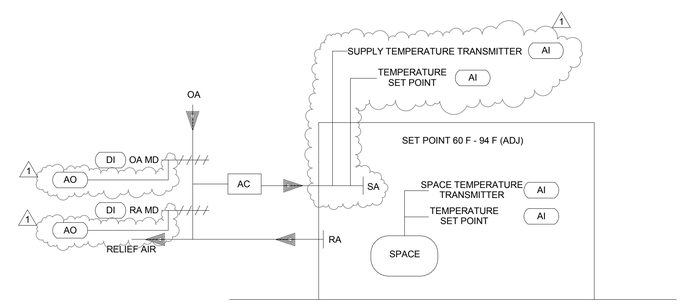

NOTE: ALL SENSORS AND CONTROLS FURNISHED BY MANUFACTURER, INTERFACE TO BMS.

5 M-707 ELEVATOR MACHINE ROOM AC UNIT CONTROL DIAGRAM
NTS

REVISED DRAWING
09/15/16

NEW YORK STATE OF OPPORTUNITY. Office of General Services

DESIGN & CONSTRUCTION

CONSULTANT

STV 100 Years

225 Park Avenue South
New York, NY 10003
t 212.777.4400 f 212.529.5237
www.stvinc.com

LI SALTZMAN ARCHITECTS, P.C.
ARCHITECTURE AND PRESERVATION

WARNING:
THE ALTERATION OF THIS MATERIAL IN ANY WAY, UNLESS DONE UNDER THE DIRECTION OF A COMPARABLE PROFESSIONAL, I.E. ARCHITECT FOR AN ARCHITECT, ENGINEER FOR AN ENGINEER, OR LANDSCAPE ARCHITECT FOR A LANDSCAPE ARCHITECT, IS A VIOLATION OF THE NEW YORK STATE EDUCATION LAW AND/OR REGULATIONS AND IS A CLASS 'A' MISDEMEANOR.

N

STATE OF NEW YORK · CLARE XINYAN PHILLIPS · 088265 · LICENSED PROFESSIONAL ENGINEER

CONTRACT:
HVAC

TITLE:
ABATE HAZARDOUS MATERIALS & RENOVATE BUILDING NO. 4

LOCATION:
STATE OFFICE BUILDING CAMPUS
1220 WASHINGTON AVE.
ALBANY, NY 12226

CLIENT:
OFFICE OF GENERAL SERVICES

KEY PLAN:

MARK	DATE	DESCRIPTION
1	08/26/16	ADDENDUM 1
	07/11/16	BID DOCUMENT

PROJECT NUMBER:	45124 - H
DESIGNED BY:	Designer
DRAWN BY:	Author
FIELD CHECK:	Checker
APPROVED:	Approver
SCALE:	NTS

SHEET TITLE:
HVAC CONTROL DIAGRAM

DRAWING NUMBER:
M-707

SHEET OF

9/16/2016 11:20:25 AM
3/8X24 PLOT SHEET

AIR HANDLING UNIT WITH ENERGY RECOVERY SCHEDULE (FAN & FILTERS)

TAG	LOCATION	DIMENSIONS (IN.) L	DIMENSIONS (IN.) W	DIMENSIONS (IN.) H	MAXIMUM WEIGHT (LBS)	OUTDOOR AIR (CFM)	SUPPLY AIR (CFM)	RETURN AIR (CFM)	RELIEF AIR (CFM)	SUPPLY FAN (PLENUM FAN) E.S.P. (IN.WG)	SUPPLY FAN T.S.P. (IN.WG)	SUPPLY FAN RPM	SUPPLY FAN MOTOR MAX. BHP	MOTOR HP	MOTOR V	MOTOR PH	MOTOR HZ	RETURN FAN (PLENUM FAN) E.S.P. (IN.WG.)	RETURN FAN MAX BHP	RETURN FAN HP	PRE-FILTER MERV	PRE-FILTER TOTAL FACE AREA (SQ. FT.)	PRE-FILTER MAX P.D. (FT.) CLEAN	PRE-FILTER MAX P.D. (FT.) REPLACE	FINAL FILTER MERV	FINAL FILTER TOTAL FACE AREA (SQ. FT.)	FINAL FILTER FACE VEL. (FPM)	FINAL FILTER MAX P.D. (FT.) CLEAN	FINAL FILTER MAX P.D. (FT.) REPLACE	RETURN FILTER MERV	RETURN FILTER TOTAL FACE AREA (SQ. FT.)	RETURN FILTER FACE VEL. (FPM)	RETURN FILTER MAX P.D. (FT.) CLEAN	RETURN FILTER MAX P.D. (FT.) REPLACE	ELECTRICAL REQUIREMENTS V	PH	HZ	FLA	MCA	MOP	MFA	REMARKS
AHU-1	PENTHOUSE	395	123	99	20650	19206 CFM	17000	15000	17206 CFM	2.5	7.2	1567	28.5	40	480	3	60	1.00	11.96	20	7	0	0.19	0.65	13	0	500	0.30	0.70	7	0	0	0.19	0.65	480	3	60	90.5	113.1	150.0	125.0	100% OA
AHU-2	PENTHOUSE	395	123	99	20650	19206 CFM	17000	15000	17206 CFM	2.5	7.2	1567	28.5	40	480	3	60	1.00	11.96	20	7	0	0.19	0.65	13	0	500	0.30	0.70	7	0	0	0.19	0.65	480	3	60	90.5	113.1	150.0	125.0	100% OA
AHU-3	PENTHOUSE	395	123	99	20650	19206 CFM	17000	15000	17206 CFM	2.5	7.2	1567	28.5	40	480	3	60	1.00	11.96	20	7	0	0.19	0.65	13	0	500	0.30	0.70	7	0	0	0.19	0.65	480	3	60	90.5	113.1	150.0	125.0	100% OA
AHU-4	ELEC 119	46	63	70	816.3	5000 CFM	5000	5000	5000 CFM	1.0	2.6	1254	4.2	5	208	3	60	0.00	0.00	0	0	0	0.00	0.00	8	0	500	0.00	0.00	0	0	0	0.00	0.00	208	3	60	22.5	28.0	50.0	50.0	OA ECONOMIZER
AHU-5	ROOF	52	37	33	550	1800 CFM	1800	1600	1600 CFM	1.2	2.5	1837	1.7	3	480	3	60	0.50	1.45	3	8	0	0.19	0.65	0	0	0	0.00	0.00	8	0	0	0.19	0.65	480	3	60	12.3	13.6	15.0	30.0	100% OA

1

AIR HANDLING UNIT WITH ENERGY RECOVERY SCHEDULE (COILS)

TAG	HEATING COIL: HEATING CFM	FACE AREA (SQ. FT.)	FACE VELOCITY (FPM)	FINNED SIZE H (IN.)	FINNED SIZE W (IN.)	MIN. ROWS/ MAX FPI	TOTAL MBH	AIR SIDE EAT (F)	AIR SIDE LAT (F)	AIR SIDE MAX. PD (IN. W.C.)	HEATING WATER SIDE EWT (F)	LWT (F)	GPM	MAX. PD (FT. W.C.)	FLUID	COOLING COIL: FACE AREA (SQ. FT.)	FACE VELOCITY (FPM)	FINNED SIZE H (IN.)	FINNED SIZE W (IN.)	MIN. ROWS/MAX FPI	CAPACITY TOTAL (MBH)	CAPACITY SENS. (MBH)	MAX PD (IN. W.C.)	EAT DB (F)	EAT WB (F)	LAT DB (F)	LAT WB (F)	EWT (F)	LWT (F)	GPM	MAX PD (FT. W.C.)	FLUID
AHU-1	17000	37.5	476	45	60	1 / 11	1357.7	-7	60	0.15	190	170	133	4.53	WATER	37.5	476	45	60	8 / 9	782.7	456.9	1.26	73.9	65.4	50.49	50.45	46	58	128	10.66	WATER
AHU-2	17000	37.5	476	45	60	1 / 11	1357.7	-7	60	0.15	190	170	133	4.53	WATER	37.5	476	45	60	8 / 9	782.7	456.9	1.26	73.9	65.4	50.49	50.45	46	58	128	10.66	WATER
AHU-3	17000	37.5	476	45	60	1 / 11	1357.7	-7	60	0.15	190	170	133	4.53	WATER	37.5	476	45	60	8 / 9	782.7	456.9	1.26	73.9	65.4	50.49	50.45	46	58	128	10.66	WATER
AHU-4	0	0.0	0	0	0	0	0.0	0	0	0.00	0	0	0	0.00	0	0.0	503	0	0		155.7	127.8	0.00	75.0	62.5	51.73	51.59	46	58	27	4.31	WATER

AIR HANDLING UNIT WITH ENERGY RECOVERY SCHEDULE (ERW)

TAG	TOTAL ENERGY RECOVERY WHEEL: SUMMER OA ENT. WHEEL DB	OA ENT. WHEEL WB	EA ENT. WHEEL DB	EA ENT. WHEEL WB	OA LVG. WHEEL DB	OA LVG. WHEEL WB	EA LVG. WHEEL DB	EA LVG. WHEEL WB	WINTER OA ENT. WHEEL DB	OA ENT. WHEEL WB	EA ENT. WHEEL DB	EA ENT. WHEEL WB	OA LVG. WHEEL DB	OA LVG. WHEEL WB	EA LVG. WHEEL DB	EA LVG. WHEEL WB	MAX. P.D. (FT.)	TOTAL EFFECTIVENESS (%) SUMMER	WINTER	WHEEL MOTOR HP	PASSIVE DESSICANT WHEEL: SUMMER SA ENT. WHEEL DB	SA ENT. WHEEL WB	EA ENT. WHEEL DB	EA ENT. WHEEL WB	SA LVG. WHEEL DB	SA LVG. WHEEL WB	EA LVG. WHEEL DB	EA LVG. WHEEL WB	WINTER SA ENT. WHEEL DB	SA ENT. WHEEL WB	EA ENT. WHEEL DB	EA ENT. WHEEL WB	SA LVG. WHEEL DB	SA LVG. WHEEL WB	EA LVG. WHEEL DB	EA LVG. WHEEL WB	MAX. P.D. (FT.)	WHEEL MOTO R HP
AHU-1	89.2	72.5	65.1	61.5	73.9	65.4	84.7	70.6	-7.0	-8.1	72.0	54.2	52.0	42.6	7.8	7.8	0.63	81.2	81.2	0.5	51.3	50.8	75.0	62.4	60.0	51.9	65.1	61.5	N/A	N/A	N/A	N/A	N/A	N/A	N/A	N/A	0.70	0.5
AHU-2	89.2	72.5	65.1	61.5	73.9	65.4	84.7	70.6	-7.0	-8.1	72.0	54.2	52.0	42.6	7.8	7.8	0.63	81.2	81.2	0.5	51.3	50.8	75.0	62.4	60.0	51.9	65.1	61.5	N/A	N/A	N/A	N/A	N/A	N/A	N/A	N/A	0.70	0.5
AHU-3	89.2	72.5	65.1	61.5	73.9	65.4	84.7	70.6	-7.0	-8.1	72.0	54.2	52.0	42.6	7.8	7.8	0.63	81.2	81.2	0.5	51.3	50.8	75.0	62.4	60.0	51.9	65.1	61.5	N/A	N/A	N/A	N/A	N/A	N/A	N/A	N/A	0.70	0.5
AHU-5	89.2	72.5	75.0	62.5	79.4	65.8	84.8	69.6	-7.0	-8.1	72.0	54.5	47.6	42.4	17.4	17.0	0.56	69	69	0.5	N/A	N/A	N/A	N/A	N/A	N/A	N/A	N/A	N/A	N/A	N/A	N/A	N/A	N/A	N/A	N/A	N/A	N/A

AIR HANDLING UNIT WITH ENERGY RECOVERY SCHEDULE (FAN SOUND DATA)

TAG	LOCATION	SUPPLY FAN SOUND POWER LEVEL (DB) 62.5	125	250	500	1000	2000	4000	8000	SUPPLY FAN SOUND POWER LEVEL (DB) 62.5	125	250	500	1000	2000	4000	8000
AHU-1	PENTHOUSE	92	96	103	102	92	88	82	74	88	95	99	94	90	86	78	68
AHU-2	PENTHOUSE	92	96	103	102	92	88	82	74	88	95	99	94	90	86	78	68
AHU-3	PENTHOUSE	92	96	103	102	92	88	82	74	88	95	99	94	90	86	78	68
AHU-4	ELEC 119	92	85	80	78	80	73	73	67	87	80	58	47	54	55	55	51
AHU-5	ROOF	-	-	-	-	-	-	-	-	-	-	-	-	-	-	-	-

FAN COIL UNIT SCHEDULE

TAG NO.	LOCATION	SERVICE	TYPE	SCFM	ESP (IN. WG)	MOTOR DATA TYPE	HP (QTY.)	BHP	MCA	ELECTRICAL V	PH	HZ	COOLING COIL: COOLING TOTAL (MBH)	SENSIBLE (MBH)	EAT DB (F)	EAT WB (F)	LAT DB (F)	LAT WB (F)	FLOW (GPM)	EWT (F)	LWT (F)	WATER MAX. PD (FT WC)	COILS ROWS	HEATING COIL: HEATING CAPACITY (MBH)	EAT (F)	LAT (F)	EWT (F)	LWT (F)	FLOW (GPM)	FILTER MERV	CABINET SIZE W (IN.)	L (IN.)	H (IN.)	OPERATING WEIGHT (LBS)	REMARKS
FCU-1	FIRST FLOOR	LOBBY	CEILING DUCTED	820	0.8	ECM	1.0	0.297	5.75	208	3	60	22.7	17.6	75	62	56	55	4.07	46	58	4.09	6	14.2	72	82	190	170	1.4	13	40	33	18	132	
FCU-2	FIRST FLOOR	LOBBY	CEILING DUCTED	820	0.8	ECM	1.0	0.297	5.75	208	3	60	22.7	17.6	75	62	56	55	4.07	46	58	4.09	6	14.2	72	82	190	170	1.4	13	40	33	18	132	

1

MODULAR AIR-COOLED CHILLER SCHEDULE

TAG NO.	LOCATION	DESIGN AMBIENT TEMP (°F)	PROPYLENE GLYCOL SOLUTION	ENTERING FLUID TEMP (°F)	LEAVING FLUID TEMP (°F)	FLUID GPM	PUMP HEAD (FT WC)	TOTAL HEAT REJECTION (MBH)	MAX PRESSURE DROP (FT)	FLUID VOLUME (GAL)	DRY WEIGHT (LBS)	NO. OF FANS	FAN FLA (EA. FAN)	FAN HP (EA. FAN)	HP	VOLTS	HZ	PH	FLA	EER	OPD	REMARKS
CH-1	ROOF	-7	40%	59	52	577	80	1,852	30	-	25,000	30	2.7	-	90	460	60	3	277	11.1	-	

NOTES:

1. CHILLER SHALL HAVE FLOODED CONTROL TO -20°F.

REVISED DRAWING
09/15/16

9/16/2016 11:20:32 AM
36x24 PLOT SHEET

NEW YORK STATE OF OPPORTUNITY. Office of General Services
DESIGN & CONSTRUCTION

CONSULTANT

STV 100 Years
225 Park Avenue South
New York, NY 10003
t 212.777.4400 f 212.529.5237
www.stvinc.com

LI SALTZMAN ARCHITECTS, P.C.
ARCHITECTURE AND PRESERVATION

WARNING:
THE ALTERATION OF THIS MATERIAL IN ANY WAY, UNLESS DONE UNDER THE DIRECTION OF A COMPARABLE PROFESSIONAL, I.E. ARCHITECT FOR AN ARCHITECT, ENGINEER FOR AN ENGINEER, OR LANDSCAPE ARCHITECT FOR A LANDSCAPE ARCHITECT, IS A VIOLATION OF THE NEW YORK STATE EDUCATION LAW AND/OR REGULATIONS AND IS A CLASS 'A' MISDEMEANOR.

N

STATE OF NEW YORK · CLARE XINYAN PHILLIPS · 088265 · LICENSED PROFESSIONAL ENGINEER

CONTRACT: HVAC

TITLE: ABATE HAZARDOUS MATERIALS & RENOVATE BUILDING NO. 4

LOCATION: STATE OFFICE BUILDING CAMPUS
1220 WASHINGTON AVE.
ALBANY, NY 12226

CLIENT: OFFICE OF GENERAL SERVICES

KEY PLAN:

MARK	DATE	DESCRIPTION
1	08/26/16	ADDENDUM 1
	07/11/16	BID DOCUMENT

PROJECT NUMBER: 45124 - H
DESIGNED BY: FG, P.E.
DRAWN BY: AK
FIELD CHECK: Checker
APPROVED: Approver
SCALE: 1" = 1'-0"

SHEET TITLE: HVAC SCHEDULES - 1

DRAWING NUMBER: M-801

SHEET OF

SPLIT SYSTEM / VRV SYSTEM OUTDOOR UNIT SCHEDULE

TAG NO.	LOCATION	AREA OR SYSTEM SERVED	TOTAL COOLING CAPACITY (MBH)	HEATING CAPACITY (MBH)	COOLING EFFICIENCY			HEATING COP (47 F)	O.A. TEMP (°F) DB/WB		COMPRESSOR MOTOR 1		COMPRESSURE MOTOR 2		COMPRESSOR TYPE	ELECTRICAL DATA						OVERALL DIMENSIONS (IN x IN x IN)	REFRIG. TYPE	UNIT WEIGHT (LBS)	REMARKS
					IEER	EER	SEER		COOLING	HEATING	QTY	AMPS (EACH)	QTY	AMPS		VOLTS	PH	HZ	FLA	MCA	MOP				
ACC-C-1	ROOF	COMMAND CENTER	274	179	21.4	11.8		3.51	89/73	-7	2	16.2+22.6	2	16.2+22.6	INVERTER	208	3	60	38.8+38.8	55+55	70+70			1560	EMERGENCY POWER
ACC-C-2	ROOF	COMMAND CENTER	270	172	20.2	11.3		3.56	89/73	-7	2	16.2+22.6	2	17.4+24.4	INIVERTER	208	3	60	41.8+38.8	61.9+55	70+70			1560	EMERGENCY POWER
ACC-S	GROUND	CBVH STORE - 123	67	75	26.2	15.8		4.29	89/73	-7	1	16.2+22.6	2	16.2+22.6	INVERTER	208	3	60	20.7	30.2	35	31X37X67	R-410A	507	

SPLIT SYSTEM / VRV SYSTEM INDOOR UNIT SCHEDULE

TAG NO.	SERVICE	TYPE	ASSOCIATED ACC UNIT	AIRFLOW (CFM)	OA CFM (CFM)	E.S.P. (IN .WG.)	TOTAL COOLING LOAD (MBH)	SENSIBLE COOLING LOAD (MBH)	HEATING LOAD (MBH)	ELECTRICAL DATA					BRANCH SELECTOR BOX	BSB MOP	BSB MCA	UNIT WEIGHT	REMARKS
										VOLTS	PH	HZ	MCA (AMPS)	MFS (AMPS) (AMPS)					
AC-C-1	328 COMMAND CENTER, 327 PANTRY	DUCTED CONCEALED CEILING TYPE	ACC-C-1	1377 CFM	169	0.4	58	42	37	208	1	60	3.4	15	BSB-1	15	0.1	104	EMERGENCY POWER, STANDARD CONDENSATE PUMP
AC-C-2	329 EOC CONFERENCE	DUCTED CONCEALED CEILING TYPE	ACC-C-1	1055 CFM	241	0.6	66	45	53	208	1	60	3.4	15	BSB-2	15	0.1	104	EMERGENCY POWER, STANDARD CONDENSATE PUMP
AC-C-3	330A ASSOC. COMMISS.	4 WAY CEILING CASSETTE	ACC-C-1	350 CFM	24	0.0	10	8	6	208	1	60	0.8	15	BSB-3	15	0.1	42	EMERGENCY POWER, STANDARD CONDENSATE PUMP
AC-C-4	330B DEPUTY COMMISS.	4 WAY CEILING CASSETTE	ACC-C-2	440 CFM	24	0.0	12	10	7	208	1	60	0.8	15	BSB-4	15	0.1	42	EMERGENCY POWER, STANDARD CONDENSATE PUMP
AC-C-5	331 DOCCS COMMIS., 332A PANTRY	DUCTED CONCEALED CEILING TYPE	ACC-C-2	1450 CFM	71	0.4	42	36	30	208	1	60	3.4	15	BSB-5	15	0.1	102	EMERGENCY POWER, STANDARD CONDENSATE PUMP
AC-C-6	325, 326 CONF	DUCTED CONCEALED CEILING TYPE	ACC-C-1	360 CFM	98	0.4	27	17	19	208	1	60	1.8	15	BSB-6	15	0.1	80	EMERGENCY POWER, STANDARD CONDENSATE PUMP
AC-C-7	332 EXEC. CONF.	DUCTED CONCEALED CEILING TYPE	ACC-C-2	550 CFM	143	0.6	39	25	32	208	1	60	2.9	15	BSB-7	15	0.1	102	EMERGENCY POWER, STANDARD CONDENSATE PUMP
AC-C-8	330 OPEN OFFICE	4 WAY CEILING CASSETTE	ACC-C-2	370 CFM	102	0.0	26	16	16	208	1	60	1.8	15	BSB-8	15	0.1	80	EMERGENCY POWER, STANDARD CONDENSATE PUMP
AC-C-9	334-339 ASST. COMMISS.	DUCTED CONCEALED CEILING TYPE	ACC-C-1	460 CFM	120	0.4	28	19	19	208	1	60	2.8	15	BSB-9	15	0.1	102	EMERGENCY POWER, STANDARD CONDENSATE PUMP
AC-C-10	333 OPEN OFFICE	DUCTED CONCEALED CEILING TYPE	ACC-C-1	610 CFM	173	0.4	41	26	25	208	1	60	2.9	15	BSB-10	15	0.1	102	EMERGENCY POWER, STANDARD CONDENSATE PUMP
AC-C-11	340 ASST. COMMISS.	4 WAY CEILING CASSETTE	ACC-C-2	250 CFM	20	0.0	8	6	5	208	1	60	0.8	15	BSB-11	15	0.1	42	EMERGENCY POWER, STANDARD CONDENSATE PUMP
AC-C-12	346 ASST. COMMISS.	4 WAY CEILING CASSETTE	ACC-C-2	260 CFM	21	0.0	8	6	5	208	1	60	0.8	15	BSB-12	15	0.1	42	EMERGENCY POWER, STANDARD CONDENSATE PUMP
AC-C-13	354 DEPT. COMMISS.	4 WAY CEILING CASSETTE	ACC-C-2	360 CFM	14	0.0	10	8	7	208	1	60	0.8	15	BSB-13	15	0.1	42	EMERGENCY POWER, STANDARD CONDENSATE PUMP
AC-C-14	354 DEPT. COMMISS.	4 WAY CEILING CASSETTE	ACC-C-2	360 CFM	14	0.0	9	8	6	208	1	60	0.8	15	BSB-14	15	0.1	42	EMERGENCY POWER, STANDARD CONDENSATE PUMP
AC-C-15	353 DEPT. COMMISS.	4 WAY CEILING CASSETTE	ACC-C-2	420 CFM	24	0.0	11	10	5	208	1	60	0.8	15	BSB-15	15	0.1	42	EMERGENCY POWER, STANDARD CONDENSATE PUMP
AC-C-16	352 DEPT. COMMISS.	4 WAY CEILING CASSETTE	ACC-C-2	420 CFM	24	0.0	11	10	5	208	1	60	0.8	15	BSB-16	15	0.1	42	EMERGENCY POWER, STANDARD CONDENSATE PUMP
AC-C-17	351 DEPT. COMMISS.	4 WAY CEILING CASSETTE	ACC-C-2	420 CFM	24	0.0	11	10	5	208	1	60	0.8	15	BSB-17	15	0.1	42	EMERGENCY POWER, STANDARD CONDENSATE PUMP
AC-C-18	350 DEPT. COMMISS.	4 WAY CEILING CASSETTE	ACC-C-1	420 CFM	24	0.0	11	10	5	208	1	60	0.8	15	BSB-18	15	0.1	42	EMERGENCY POWER, STANDARD CONDENSATE PUMP
AC-C-19	349 DEPT. COMMISS.	4 WAY CEILING CASSETTE	ACC-C-1	420 CFM	24	0.0	11	10	5	208	1	60	0.8	15	BSB-19	15	0.1	42	EMERGENCY POWER, STANDARD CONDENSATE PUMP
AC-C-20	348 DEPT. COMMISS.	4 WAY CEILING CASSETTE	ACC-C-1	420 CFM	24	0.0	11	10	5	208	1	60	0.8	15	BSB-20	15	0.1	42	EMERGENCY POWER, STANDARD CONDENSATE PUMP
AC-C-21	347 COUNSEL	4 WAY CEILING CASSETTE	ACC-C-1	420 CFM	24	0.0	11	10	5	208	1	60	0.8	15	BSB-21	15	0.1	42	EMERGENCY POWER, STANDARD CONDENSATE PUMP
AC-C-22	333 OPEN OFFICE, 335 BREAK	DUCTED CONCEALED CEILING TYPE	ACC-C-2	645 CFM	149	0.4	38	24	20	208	1	60	2.8	15	BSB-22	15	0.1	102	EMERGENCY POWER, STANDARD CONDENSATE PUMP
AC-C-23	341, 342, 344, 345 ASST. COMMISS., 343 COPY	DUCTED CONCEALED CEILING TYPE	ACC-C-2	500 CFM	87	0.4	24	17	13	208	1	60	2.8	15	BSB-23	15	0.1	102	EMERGENCY POWER, STANDARD CONDENSATE PUMP
AC-C-24	333 OPEN OFFICE EXT	4 WAY CEILING CASSETTE	ACC-C-2	320 CFM	20	0.0	11	8	9	208	1	60	0.8	15	BSB-24	15	0.1	42	EMERGENCY POWER, STANDARD CONDENSATE PUMP
AC-C-25	333 OPEN OFFICE EXT	4 WAY CEILING CASSETTE	ACC-C-2	260 CFM	20	0.0	10	8	7	208	1	60	0.8	15	BSB-25	15	0.1	42	EMERGENCY POWER, STANDARD CONDENSATE PUMP

1

IT/ELECTRICAL CLOSETS SYSTEM DRY COOLER SCHEDULE

TAG NO.	LOCATION	CIRCUITING	DESIGN AMBIENT TEMP (°F)	PROPYLENE GLYCOL SOLUTION	ENTERING FLUID TEMP (°F)	LEAVING FLUID TEMP (°F)	FLUID GPM	TOTAL HEAT REJECTION (MBH)	MAX PRESSURE DROP (FT)	DRY WEIGHT (LBS)	NO. OF FANS	FAN HP (EA. FAN)	MCA	VOLTS	HZ	PH	REMARKS
DC-1	ROOF	37 FEEDS	-7	40%	64	54	66	304	5.3	600	2	1.5	15	460	60	3	EMERGENCY POWER

DRY COOLER PUMP PACKAGE ELECTRICAL DATA

TAG NO.	LOCATION	SERVING	ELECTRICAL DATA						WEIGHT (LBS)	REMARKS
			VOLTS	HZ	PH	FLA	MCA	MFS		
DC-P	PENTHOUSE	DC-1	460	60	3	3.2	3.9	15	200	EMERGENCY POWER

GLYCOL FEEDER UNIT SCHEDULE

TAG NO.	LOCATION	SERVING	SERVICE TEMPERATURE (°F)	FLUID GPM	HEAD (FT.WC)	PRESSURE RANGE (PSI)	MAX WEIGHT (LBS)	MOTOR				DIMENSIONS		REMARKS
								HP	VOLTS	HZ	PH	HEIGHT	DIA	
GFU-1	MECH/PLUMBING 122	DC-1	40-120	5	70	3-30	600	1/2	115	60	1	5' - 0"	2' - 6"	EMERGENCY POWER
GFU-2	MECH/PLUMBING 122	CH-1	40-120	5	70	3-30	600	1/2	115	60	1	5' - 0"	2' - 6"	EMERGENCY POWER

DATA/ELECTRICAL CLOSET SYSTEM INDOOR UNIT SCHEDULE

TAG NO.	SERVICE	TYPE	ASSOCIATED ACC UNIT	AIRFLOW (CFM)	TOTAL COOLING CAPACITY (MBH)	SENSIBLE COOLING CAPACITY (MBH)	FLOW GPM	ELECTRICAL DATA						OVERALL DIMENSIONS (IN x IN x IN)	UNIT WEIGHT	REMARKS
								VOLTS	PH	HZ	FLA (AMPS)	MCA (AMPS)	MFS (AMPS) (AMPS)			
AC-1-1	115 ELEC	CEILING MOUNTED DUCTLESS	DC-1	500 CFM	12	10.5	3.8	208	1	60	8.8	14.3	20	47 X 28 X 21	160	EMERGENCY POWER
AC-1-2	117 TELECOM	CEILING MOUNTED DUCTLESS	DC-1	500 CFM	12	10.5	3.8	208	1	60	8.8	14.3	20	47 X 28 X 21	160	EMERGENCY POWER
AC-1-3	129 ELEC	CEILING MOUNTED DUCTLESS	DC-1	500 CFM	12	10.5	3.8	208	1	60	8.8	14.3	20	47 X 28 X 21	160	EMERGENCY POWER
AC-1-4	131 TELECOM	CEILING MOUNTED DUCTLESS	DC-1	500 CFM	12	10.5	3.8	208	1	60	8.8	14.3	20	47 X 28 X 21	160	EMERGENCY POWER
AC-1-5	119A EMERGENCY ELEC	CEILING MOUNTED DUCTLESS	DC-1	1000 CFM	28	24	8	208	1	60	17.7	26	46	47 X 28 X 27	245	EMERGENCY POWER
AC-1-6	120C MDF (DUTY)	CEILING MOUNTED DUCTLESS	DC-1	500 CFM	12	10.5	3.8	208	1	60	8.8	14.3	20	47 X 28 X 21	160	EMERGENCY POWER
AC-1-7	120C MDF (STANDBY)	CEILING MOUNTED DUCTLESS	DC-1	500 CFM	12	10.5	3.8	208	1	60	8.8	14.3	20	47 X 28 X 21	160	EMERGENCY POWER
AC-2-1	209 ELEC	CEILING MOUNTED DUCTLESS	DC-1	500 CFM	12	10.5	3.8	208	1	60	8.8	14.3	20	47 X 28 X 21	160	EMERGENCY POWER
AC-2-2	211 TELECOM	CEILING MOUNTED DUCTLESS	DC-1	500 CFM	12	10.5	3.8	208	1	60	8.8	14.3	20	47 X 28 X 21	160	EMERGENCY POWER
AC-2-3	216 ELEC	CEILING MOUNTED DUCTLESS	DC-1	500 CFM	12	10.5	3.8	208	1	60	8.8	14.3	20	47 X 28 X 21	160	EMERGENCY POWER
AC-2-4	218 TELECOM	CEILING MOUNTED DUCTLESS	DC-1	500 CFM	12	10.5	3.8	208	1	60	8.8	14.3	20	47 X 28 X 21	160	EMERGENCY POWER
AC-3-1	311 ELEC	CEILING MOUNTED DUCTLESS	DC-1	500 CFM	12	10.5	3.8	208	1	60	8.8	14.3	20	47 X 28 X 21	160	EMERGENCY POWER
AC-3-2	313 TELECOM	CEILING MOUNTED DUCTLESS	DC-1	500 CFM	12	10.5	3.8	208	1	60	8.8	14.3	20	47 X 28 X 21	160	EMERGENCY POWER
AC-3-3	320 ELEC	CEILING MOUNTED DUCTLESS	DC-1	500 CFM	12	10.5	3.8	208	1	60	8.8	14.3	20	47 X 28 X 21	160	EMERGENCY POWER
AC-3-4	322 TELECOM	CEILING MOUNTED DUCTLESS	DC-1	500 CFM	12	10.5	3.8	208	1	60	8.8	14.3	20	47 X 28 X 21	160	EMERGENCY POWER

SPLIT SYSTEM / VRV SYSTEM INDOOR UNIT SERVING CBVH STORE 123 SCHEDULE

TAG NO.	SERVICE	TYPE	ASSOCIATED ACC UNIT	AIRFLOW (CFM)	OA CFM (CFM)	E.S.P. (IN. WG.)	TOTAL COOLING LOAD (MBH)	SENSIBLE COOLING LOAD (MBH)	HEATING LOAD (MBH)	ELECTRICAL DATA					BRANCH SELECTOR BOX	BSB MOP	BSB MCA	UNIT WEIGHT	REMARKS
										VOLTS	PH	HZ	MCA	MOP					
AC-S-1	CBVH STORE - 123	DUCTED CONCEALED CEILING TYPE	ACC-S	1940 CFM	280	O.4	41.8	36.0	5.4	208	3	60	3.4	15	BSB-S-1	15	0.1	102	
AC-S-2	ENCLAVE - 125	4 WAY CEILING CASSETTE	ACC-S	833 CFM	60	0.0	20.9	20.3	1.2	208	3	60	0.9	15	BSB-S-2	15	0.1	42	

1

REVISED DRAWING
09/15/16

9/16/2016 11:20:42 AM
3862X PLOT SHEET

NEW YORK STATE OF OPPORTUNITY. Office of General Services

DESIGN & CONSTRUCTION

CONSULTANT

STV 100 Years

225 Park Avenue South
New York, NY 10003
t 212.777.4400 f 212.529.5237
www.stvinc.com

LI SALTZMAN ARCHITECTS, P.C.
ARCHITECTURE AND PRESERVATION

WARNING:
THE ALTERATION OF THIS MATERIAL IN ANY WAY, UNLESS DONE UNDER THE DIRECTION OF A COMPARABLE PROFESSIONAL, I.E. ARCHITECT FOR AN ARCHITECT, ENGINEER FOR AN ENGINEER, OR LANDSCAPE ARCHITECT FOR A LANDSCAPE ARCHITECT, IS A VIOLATION OF THE NEW YORK STATE EDUCATION LAW AND/OR REGULATIONS AND IS A CLASS 'A' MISDEMEANOR.

N

STATE OF NEW YORK · CLARE XINYAN PHILIPS · 088265 · LICENSED PROFESSIONAL ENGINEER

CONTRACT: HVAC

TITLE: ABATE HAZARDOUS MATERIALS & RENOVATE BUILDING NO. 4

LOCATION: STATE OFFICE BUILDING CAMPUS
1220 WASHINGTON AVE.
ALBANY, NY 12226

CLIENT: OFFICE OF GENERAL SERVICES

KEY PLAN:

MARK	DATE	DESCRIPTION
1	08/26/16	ADDENDUM 1
	07/11/16	BID DOCUMENT

PROJECT NUMBER:	45124 - H
DESIGNED BY:	FG, P.E.
DRAWN BY:	AK
FIELD CHECK:	Checker
APPROVED:	Approver
SCALE:	12" = 1'-0"

SHEET TITLE: HVAC SCHEDULES - 3

DRAWING NUMBER: M-803

SHEET OF

SHELL AND TUBE HEAT EXCHANGER SCHEDULE

TAG	LOCATION	SERVICE	TYPE	TOTAL MBH	DIMENSIONS		OPERATING WEIGHT (LBS)	SHELL SIDE				TUBE SIDE					FOULING FACTOR	REMARKS
					L	DIA		FLUID	STEAM FLOW (LB/HR)	STEAM ENT. PRESS (PSI)	STEAM COND. LVG TEMP (F)	FLUID	FLOW GPM	ENT. TEMP (°F)	LVG. TEMP (°F)	P.D. (PSI)		
HX-2	MECH/PLUMBING ROOM - 122	HEATING	SHELL AND TUBE	5,000	4' - 8"	1' - 2"	880	STEAM	5,150	15	250	WATER	500	170	190	0.63	0.0006	110% LOAD
HX-3	MECH/PLUMBING ROOM - 122	HEATING	SHELL AND TUBE	5,000	4' - 8"	1' - 2"	880	STEAM	5,150	15	250	WATER	500	170	190	0.63	0.0006	110% LOAD

PLATE AND FRAME HEAT EXCHANGER SCHEDULE

TAG	LOCATION	SERVICE	TYPE	TOTAL MBH	DIMENSIONS			NUMBER OF PASSES	OPERATING WEIGHT (LBS)	PRIMARY SIDE					SECONDARY SIDE					FOULING FACTOR	REMARKS
					L	W	H			FLUID	WATER FLOW (GPM)	ENT. FLUID TEMP (°F)	LVG. FLUID TEMP (°F)	P.D. (PSI)	FLUID	FLOW GPM	ENT. TEMP (°F)	LVG. TEMP (°F)	P.D. (PSI)		
HX-1	MECH/PLUMBING ROOM - 122	CHILLED BEAM CHILLED WATER	PLATE AND FRAME	1,865	3' - 8 13/32"	2' - 1 3/4"	6' - 7"	1	3485	40% PROP. GLYCOL	577	52	59	3.8	WATER	930	61	57	7.90	0.0005	WINTER
HX-4	MECH/PLUMBING ROOM - 122	CAMPUS/BLDG4 CHW	PLATE AND FRAME	5,850	7' - 5"	2' - 2"	6' - 7"	1	5843	WATER	975	44	56	9.11	WATER	885	59	46	7.54	0.0005	
HX-5	MECH/PLUMBING ROOM - 122	CAMPUS/BLDG4 CHW	PLATE AND FRAME	5,850	7' - 5"	2' - 2"	6' - 7"	1	5843	WATER	975	44	56	9.11	WATER	885	59	46	7.54	0.0005	

1

PUMP SCHEDULE

TAG NO.	LOCATION	SYSTEM SERVED	FLUID	SERVICE TEMP (°F)	SIZE			GPM	HEAD (FT WC)	NPSH (FT)	MIN. EFFICIENCY (%)	MOTOR				ELECTRICAL			WEIGHT (LBS)	REMARKS
					SUCTION (IN)	DISCHARGE (IN)	IMPELLER (IN)					BHP	HP	RPM	TYPE 1	VOLTS	PHASE	HERTZ		
CHWP-1	MECH/PLUMBING ROOM - 122	CHILLED WATER	WATER	44	6.00	5.00	9.50	830	80	14.1	82	20.7	25	1800	END SUCTION BASE MOUNT	460	3	60	710	VFD
CHWP-2	MECH/PLUMBING ROOM - 122	CHILLED WATER	WATER	44	6.00	5.00	9.50	830	80	14.1	82	20.7	25	1800	END SUCTION BASE MOUNT	460	3	60	710	VFD & STANDBY
CHWP-3	MECH/PLUMBING ROOM - 122	CHILLED WATER FOR CHILLED BEAM	WATER	57	6.00	5.00	11.00	1350	80	15.0	78	34.8	40	1800	END SUCTION BASE MOUNT	460	3	60	945	VFD
CHWP-4	MECH/PLUMBING ROOM - 122	CHILLED WATER FOR CHILLED BEAM	WATER	57	6.00	5.00	11.00	1350	80	15.0	78	34.8	40	1800	END SUCTION BASE MOUNT	460	3	60	945	VFD & STANDBY
FPWP-1	PENTHOUSE	AHU-1 FREEZE PROTECTION	WATER	190	3.00	3.00	4.75	135	15	15.8	64	0.8	1	1800	IN-LINE	460	3	60	75	STARTER
FPWP-2	PENTHOUSE	AHU-1 FREEZE PROTECTION	WATER	190	3.00	3.00	4.75	135	15	15.8	64	0.8	1	1800	IN-LINE	460	3	60	75	STARTER
FPWP-3	PENTHOUSE	AHU-1 FREEZE PROTECTION	WATER	190	3.00	3.00	4.75	135	15	15.8	64	0.8	1	1800	IN-LINE	460	3	60	75	STARTER
HWP-1	MECH/PLUMBING ROOM - 122	HEATING	WATER	190	4.00	3.00	9.50	500	80	7.8	85	12.3	15	1800	END SUCTION BASE MOUNT	460	3	60	535	VFD
HWP-2	MECH/PLUMBING ROOM - 122	HEATING	WATER	190	4.00	3.00	9.50	500	80	7.8	85	12.3	15	1800	END SUCTION BASE MOUNT	460	3	60	535	VFD & STANDBY

1

DUPLEX STEAM CONDENSATE RECEIVER AND PUMP SET SCHEDULE

TAG NO.	LOCATION	SYSTEM SERVED	RECIEVER CAPACITY (GAL)	TOTAL CAPACITY EDR	WATER PUMP								OVERALL DIMENSIONS			REMARKS
					NO. PUMPS	GPM	DISCHARGE (FT.HD.)	ELECTRICAL					L (IN)	W (IN)	H (IN)	
								HP	RPM	VOLTS	PHASE	HERTZ				
SCP-1	MECH/PLUMBING ROOM - 122	STEAM COND. RETURN	45	25,000	2	30	46.20	0.75	3,450	115	1	60	25.8	26.8	17.3	

EXPANSION TANK SCHEDULE

TAG NO.	LOCATION	SYSTEM SERVED	TYPE	FLUID	SYSTEM VOLUME (GAL)	TANK VOLUME (GAL)	MININUM ACCEPTANCE VOLUME (GAL)	DIMENSIONS (IN)		PRESSURE (PSI)		OPERATING TEMPERATURE (°F)	SHIPPING WEIGHT (LBS)	REMARKS
								DIAMETER	HEIGHT	MIN. CHARGE PRESSURE (PSIG)	MAX. UNIT PRESS.			
ET-1	MECH/PLUMBING ROOM - 122	HEATING	BLADDER	WATER	1,900	158	22.6	16	56	25	50	190	510	
ET-2	MECH/PLUMBING ROOM - 122	COOLING	DIAPHRAGM	WATER	3,000	44.4	71	30	64	25	50	44	150	

HOT WATER FINNED-TUBE RADIATION SCHEDULE

TAG NO.	LOCATION	ROWS OF HEATING ELEMENTS	COPPER TUBE DIA. (IN.)	H.W. TEMP. (°F)		ALUMINUM FINS/FT	FIN DIMS. (IN.)		ASSEMBLY BTUH/FT	REMARKS
				EWT	LWT		H	W		
FTR	REFER TO PLANS	1	0.75	190	170	50	4.25	4.25	800	

NOTES:
1. REFER TO PLANS FOR FTR LENGTHS AND CONTROL VALVE LOCATIONS. REFER TO CONTROL VALVE SCHEDULE FOR FTR ASSEMBLY GPMS.
2. REFER TO M-508 FOR FTR COVER DETAILS.

REVISED DRAWING
09/15/16

9/16/2016 11:20:47 AM
3/9/2014 FLO SHEET

NEW YORK STATE OF OPPORTUNITY. Office of General Services

DESIGN & CONSTRUCTION

CONSULTANT

STV 100 Years

225 Park Avenue South
New York, NY 10003
t 212.777.4400 f 212.529.5237
www.stvinc.com

LI SALTZMAN ARCHITECTS, P.C.
ARCHITECTURE AND PRESERVATION

WARNING:
THE ALTERATION OF THIS MATERIAL IN ANY WAY, UNLESS DONE UNDER THE DIRECTION OF A COMPARABLE PROFESSIONAL, I.E. ARCHITECT FOR AN ARCHITECT, ENGINEER FOR AN ENGINEER, OR LANDSCAPE ARCHITECT FOR A LANDSCAPE ARCHITECT, IS A VIOLATION OF THE NEW YORK STATE EDUCATION LAW AND/OR REGULATIONS AND IS A CLASS 'A' MISDEMEANOR.

N

STATE OF NEW YORK · CLARE KINYAN PHILLIPS · 088265 · LICENSED PROFESSIONAL ENGINEER

CONTRACT:
HVAC

TITLE:
ABATE HAZARDOUS MATERIALS & RENOVATE BUILDING NO. 4

LOCATION:
STATE OFFICE BUILDING CAMPUS
1220 WASHINGTON AVE.
ALBANY, NY 12226

CLIENT:
OFFICE OF GENERAL SERVICES

KEY PLAN:

MARK	DATE	DESCRIPTION
1	08/26/16	ADDENDUM 1
	07/11/16	BID DOCUMENT

PROJECT NUMBER: 45124 - H
DESIGNED BY: Designer
DRAWN BY: Author
FIELD CHECK: Checker
APPROVED: Approver
SCALE:

SHEET TITLE:
HVAC SCHEDULES - 4

DRAWING NUMBER:
M-804

SHEET OF