DIVISION OF FINANCIAL ADMINISTRATION

ADDENDUM #2

INVITATION FOR BID #2791
Programmable Logic Controller Replacement
Building 22 at the W. Averell Harriman State Office Campus

Date: September 12, 2023

Original Bid Due Date: Wednesday September 6, 2023 @ 2:00 PM

New Bid Due Date: Wednesday September 20, 2023 @ 2:00 PM

To Prospective Proposers: This addendum is being issued to provide official answers to submitted questions, as well as two revisions.

Questions and Answers: Answers to Questions submitted by Vendors who attended the mandatory site visit.

Q1. Who is the manufacturer that we need to contact to get the PLC code from? Is it Square D? Do you have a person we can contact?

A1. This manufacturer is Schneider Electric, and a contact will be provided to the awarded Contractor.

Q2. Is there a chance we can review the code before presenting our bid?

A2. No, the code is proprietary information.

Q3. Instead of contacting the manufacturer? Is there anyone from your maintenance team who can upload the code from the PLC directly so we can review?

A3. No, the code is proprietary information.

Q4. Attachments 3 and 4 seems to be unrelated to the PLC replacement work and we believe it was just provided for reference. The drawings seem to have random letters printed all over it and it makes it a little unclear.

Attachment 5 shows the schematic of the PLC and HMI of “Sec switchgear A and B”. Is this what is called superstructure and substructure?

A4. Attachments 3 & 4 have been revised and are attached to this Addendum 2. The drawings are for the superstructure "A" side 21295878-003 & "B" side 21295878-002.

It is the substructure.

Q5. Attachment 5 seems to show only switchgear called substructure. Per A7 on Addendum 1, both superstructure and substructure have different input modules. (140DDI35300 vs 140DAI543). Could you provide the drawings for the superstructure switchgear?

A5. The Attachments 3 & 4 are the drawings for the Superstructure "A" side 21295878-003 & "B" side 21295878-002.

Q6. It was mentioned that the contractor will need to update the drawings. Are we required to update only affected sheets in Attachment 5 or is there any other drawings needed to be updated.

A6. All affected drawings should be updated.

Q7. We received the drawings in PDF format in the addendum. Will it be provided in AutoCAD format upon winning the contract?

A7. No. The drawings can only be provided in PDF format.

Q8. Per A15 and Q15 on Addendum 1, it was mentioned that different relays are needed to be upgraded but there was no mention on which relays, type, and count of each. Can we get elaboration on this?

A8. See R2 below in the Revisions section.

Revisions:

R1. IFB# 2791 – Section 1.3 Key Events, New Bid Due Date

OGS Issues Invitation for Bid (IFB) #2791	July 21, 2023
Mandatory Site Visit	August 15, 2023, at 10:00am
Deadline for Submission of Bidder Questions	August 18, 2023
OGS Issues Responses to Written Questions (estimated)	August 23, 2023
~~Bid Due Date~~	~~September 6, 2023, at 2:00 PM~~
New Bid Due Date	September 20, 2023 at 2:00 PM
Contract Start Date	Upon OSC Approval

R2. Addendum 1 Questions and Answers: A15 – New answer.

~~A15. The relays mentioned are different from the Crompton relays. It should operate with the switchboard~~.

A15. Yes (Item-6) refers to Crompton relays, but only for Substructure Switchgear. No relays need upgrading for Superstructure Switchgear. Relay info (Amount & P/N,s) can be found on pages 13 & 14 of Attachment 5 - 21295878-007 As Built Substation SWG A & B – FO#21295878-007 – substructure.

All other terms and conditions remain unchanged.

If submitting a proposal, this Addendum #2 for IFB #2791 must contain an original signature, be dated, attached to, and made a part of your proposal.

Company Name_____

Address (include City, State, Zip)_____

Bidders Name (please print)_____

Title_____

Signature_____

Date_____

DIVISION OF FINANCIAL ADMINISTRATION

ADDENDUM #1

INVITATION FOR BID #2791
Programmable Logic Controller Replacement
Building 22 at the W. Averell Harriman State Office Campus

Date: August 28, 2023

Bid Due Date: Wednesday September 6, 2023 @ 2:00 PM

To Prospective Proposers: This addendum is being issued to provide a list of site visit attendees and official answers to submitted questions, as well as one revision.

Site Visit Attendees:
Vendors who attended the mandatory site visit on August 15, 2023 at 10:00 AM.

- Controls Automation Consultants
- Fast Logix
- LNDTS
- PJT Electrical Contracting LLC

Questions and Answers:
Answers to Questions submitted by Vendors who attended the mandatory site visit.

Q1. Could we confirm whether there are necessary operational modifications for the PLC or HMI programs?

A1. Possible proprietary modifications could be needed for full functionality of the system, such as software upgrades, etc.

Q2. May we receive an I/O list for the existing system?

A2. See Attachments 3, 4 and 5.

Q3. Is the upgrade software to be provided by the client, or should it be listed in our deliverables if acquired?

A3. Upgrade software must be provided by the Contractor.

Q4. Could you forward a comprehensive schematic set for each substation's control system, including PLC, HMI, relays, breakers, RIO, BOM, etc.?

A4. See Attachments 3, 4 and 5.

Q5. Would you be able to provide a BOM for the enclosure in the substation housing the PLC and racks? We're particularly interested in the model numbers and dimensions of the backplates and enclosure.

A5. See Attachments 3, 4 and 5.

Q6. Page 8, Paragraph 2.2: We need PLC electrical schematics to properly quote this job.

A6. See Attachments 3, 4 and 5.

Q7. Page 8, Paragraph 2.2, Item 2: We need the part numbers of the existing PLC CPU, and the rest of the rack modules that will need to be replaced.

A7. Substructure PLC (1) – 140 CPS 124 20, 140 CRA 932 00, 140 DRA 840 00, 140 DAI 543
Substructure PLC (2) – 140 CPS 124 20, 140 CRA 932 00, 140 DRA 840 00, 140 DAI 543
Substructure CPU (1) – s/n 21065205036 – 140 CPS 124 20, 140 CPU 671 60, 140 CRP 932 00, 140 NOE 771 01
Substructure CPU (2) – s/n 21065200243 – 140 CPS 124 20, 140 CPU 671 60, 140 CRP 932 00, 140 NOE 771 01
Superstructure PLC (1) – 140 CPS 124 20, 140 CRA 312 00, 140 DDI 353 00, 140 DRA 840 00
Superstructure PLC (2) – 140 CPS 124 20, 140 CRA 312 00, 140 DDI 353 00, 140 DRA 840 00
Superstructure CPU (1) – s/n 21141508465 – 140 CPS 124 20, 140 CPU 671 60, 140 NOE 771 11, CRP 312 00
Superstructure CPU (2) – s/n 21142513841 – 140 CPS 124 20, 140 CPU 671 60, 140 NOE 771 11, CRP 312 00

Q8. Page 8, Paragraph 2.2: We need the code from the existing PLC that needs to be converted to new one.

A8. The Contractor should contact the manufacturer after the contract is awarded for this information.

Q9. Page 8, Paragraph 2.2: Are there dedicated part numbers to be used for the new CPU(s) and belonging modules that will have to be used to swap old ones, or the bidder will be responsible to choose which series of M580 CPU and rack devices will be used?

A9. The Contractor is responsible to choose.

Q10. Page 8, Paragraph 2.2, Item 4: Same as with the PLC, we need the part numbers of the existing Magelis HMIs.

A10. Substructure Model – XBTGT7340 s/n 125178C006644;
Superstructure Model – XBTGT7340 s/n 121578C011871

Q11. Page 8, Paragraph 2.2: We need codes from both existing HMIs.

A11. The Contractor should contact the manufacturer after the contract is awarded for this information.

Q12. Page 8, Paragraph 2.2: Same as with PLC, are the wanted new HMIs chosen for us, or we as a bidder, need to find the most adequate replacement, and does it have to be Magelis? The scope only mentions that it has to be 15". Does it have to be 15" in case new ones do not come in that size?

A12. The HMIs must be Magelis 15".

Q13. Page 8, Paragraph 2.2,

a) Item 7: We need the part numbers and count from the existing MGE UPS and the p/n and count from the new APC UPS that needs to be installed?
b) During site visit we counted 3 UPS battery packs of at least 2 different types, is that correct?

A13.

a) MGE was changed to Triplite. See Revision 1. Substructure UPS's - (2) Triplite Model # SMART 2200SLT input – 120v, output – 120v, 2200va
b) Yes, that is correct. Superstructure UPS – Evolution 1550 s/n AW7N50005 input – 120v, output – 120v, 1440va

All UPSs should be upgraded to American Power Corporation (APC) Smart UPSs of equal rated power and size for full functionality of the system.

Q14. Page 8, Paragraph 2.2, Item 5: We need the part number and the count from the existing Crompton relays and the part number count from the new Basler relays that need to be installed.

A14. Substructure (3) relays – p/n 252-PSGU, 252-PVAU, 253-PHDU, 252 PSGU
Superstructure (1) relay – p/n 253 PHDU, 252 PVAU, 252 PSGU

Basler (4 total) relays part numbers are not available but should be of equal rating and size.

Q15. Page 8, Paragraph 2.2, Item 6: Does this refer to the relays mentioned above, or we have different relays that have to be upgraded related to the "switchboard main gear"? In the context, do we have to operate/work with the switchboard or only take care of the UPS feed from it.

A15. The relays mentioned are different from the Crompton relays. It should operate with the switchboard.

Q16. Page 8, Paragraph 2.2, Item 6: Does the "emergency generator" refer to the below mentioned UPS, or is there a real emergency generator we need to work with?

A16. No, there are two emergency generators.

Q17. Page 8, Paragraph 2.2, Item 8: Who provides the templates for testing reports, the contractor (us), or the client?

A17. The Contractor.

Q18. We need a confirmation where is the power feed to each UPS and main panels (should be seen on pictures).

A18. The power feeds (120v outlets) are inside switchgear compartments where the UPSs are located.

Q19. Will the contractor be required to modify or create any drawings?

A19. Yes, updated drawings will be required to be submitted to OGS electronically.

Q20. Due to delays in supply market, it would be a good idea to share all relevant part numbers as soon as possible.

A20. All part numbers are shared within this addendum.

Q21. Page 8, Paragraph 2.4: What are the conditions and requirements duration and otherwise regarding:

A. Commissioning?
B. Training?
C. Future stand by and support service?

A21. A. Commissioning of the new systems should be based on manufacturer's procedures and sequence of operations.
B. Contractor shall provide OGS Utilities with onsite training for new control systems and equipment operation.
C. Nothing beyond the standard warranty.

Q22. Page 9, Paragraph 2.5, Item 3: Can you provide more information or specs on the "de-energized board" needed?

A22. OGS will collaborate with the awarded Contractor to de-energize the existing board.

Q23. Page 9, Paragraph 2.5, Item 4: What is considered by re-feeding downstream system? We assume it is only related to writing in the new UPS.

A23. OGS will collaborate with the awarded Contractor for re-feeding downstream electrical loads. It pertains to any Utilities equipment affected by a power outage.

Q24. During the site visit, the utility techs did not know where the CPU(s) are, so they showed us only the RIO (remote IO) CRA processors with their racks (4 racks in total). The drawings will help us understand what is missing.

A.24 See attachments – in both Substructure & Superstructure, CPUs are located in upper compartment to the left of the HMI.

Q25. Do NY state-based companies have preference over out of state ones, in case of similarly priced bids, or otherwise?

A25. No, NYS companies do not receive any preference over out of state companies.

Q26. Does the contractor need to be registered as a small business in NY?

A26. No, the contractor does not need to be registered as a small business in NY.

Q27. Will OGS give preference to NY state small businesses over other companies?

A27. No, OGS will not give preference to NYS small businesses.

Revisions

R1. Section 2.2 – Switchboard ATO Modernization, Item 7, has been revised as follows:

7. Upgrade the existing ~~MGE~~ Triplite uninterrupted power supply (UPS) unit to a new American Power Corporation (APC) Smart UPS.

All other terms and conditions remain unchanged.

If submitting a proposal, this Addendum #1 for IFB #2791 must contain an original signature, be dated, attached to, and made a part of your proposal.

Company Name_____

Address (include City, State, Zip)_____

Bidders Name (please print)_____

Title_____

Signature_____

Date_____

INVITATION FOR BIDS #2791

SOLICITED BY

NEW YORK STATE OFFICE OF GENERAL SERVICES

FOR

PROGRAMMABLE LOGIC CONTROLLER REPLACEMENT

BUILDING 22 AT THE W. AVERELL HARRIMAN STATE OFFICE CAMPUS, ALBANY, NY

ISSUE DATE: July 21, 2023

BID DUE DATE: September 6, 2023 @ 2:00 PM

Primary Contact:

Rebecca Beattie
Contract Management Specialist I
Voice: 1-518-474-5981
Email: Rebecca.Beattie@ogs.ny.gov

Alternate Contact:

Paige Corning
Contract Management Specialist II
Voice: 1-518-474-8209
Email: Paige.Corning@ogs.ny.gov

Alternate Contact:

Andrea Garavelli
Contract Management Specialist III
Voice: 1-518-474-9139
Email: Andrea.Garavelli@ogs.ny.gov

Table of Contents

TABLE OF CONTENTS **2**

1. INTRODUCTION **4**

1.1 Overview 4
1.2 Designated Contact 4
1.3 Key Events 5
1.4 Minimum Bidder Qualifications 5
1.5 Mandatory Site Visit 6
1.6 Glossary of Terms 7

2. SCOPE OF WORK **8**

2.1 General Scope 8
2.2 Switchboard ATO Modernization 8
2.3 Hazardous Materials (HAZMAT) 8
2.4 Commissioning and Training 8
2.5 Service Requirements 9
2.6 Staffing Requirements 9
2.7 Warranties 9
2.8 Prevailing Wage Rate Advisory Notice 9
2.9 Background Checks 10
2.10 OSHA (Occupational Safety & Health Administration) Training Requirements 12

3. BID SUBMISSION **14**

3.1 IFB Questions and Clarifications 14
3.2 Bid Format and Content 14
3.3 Bid Preparation 15
3.4 Packaging of IFB Response 15
3.5 Instructions for Bid Submission 16

4. ADMINISTRATIVE INFORMATION **18**

4.1 Issuing Office 18
4.2 Method of Award 18
4.3 Price 18
4.4 Term of Contract 18
4.5 Method of Payment 18
4.6 Electronic Payment 19
4.7 Past Practice 19
4.8 Exceptions and Extraneous Terms 20
4.9 Dispute Resolution 20
4.10 Prime Contractor Responsibilities 20
4.11 Examination of Contract Documents 20
4.12 Rules of Construction 21
4.13 Use of State Tools and Equipment 21

5. CONTRACT CLAUSES AND REQUIREMENTS 23
5.1 Appendix A / Order of Precedence 23
5.2 Procurement Lobbying Requirement 23
5.3 Tax and Finance Clause 23
5.4 Freedom of Information Law / Trade Secrets 24
5.5 General Requirements 24
5.6 Subcontractors 25
5.7 Procurement Rights 25
5.8 Extent of Services 26
5.9 Debriefings 26
5.10 Termination 26
5.11 NYS Vendor Responsibility 27
5.12 New York State Vendor File Registration 28
5.13 Ethics Compliance 28
5.14 Indemnification 28
5.15 Force Majeure 29
5.16 Encouraging Use of New York State Businesses in Contract Performance 29
5.17 Sexual Harassment Prevention 29
5.18 Contractors Compensatory Liability 30

Appendix A……Standard Clauses for New York State Contracts

IFB Appendix B……..Required Forms
IFB Appendix C..……..Sample Contract
IFB Appendix D…….Insurance Requirements
IFB Appendix E……....MWBE and EEO Requirements
IFB Appendix F……....SDVOB Requirements

IFB Attachment 1…..Bid Proposal Form
IFB Attachment 2…..State Tools and Equipment Use Request

1. Introduction

1.1 Overview

The State of New York Office of General Services (OGS), Division of Utilities Management is seeking a vendor to provide modernization of Automatic Throw Over (ATO) controls on the electrical substructure and superstructure switchgear located at the W. Averell Harriman State Office Campus, Building 22 in Albany, NY. The industrial electrical switchgear computing system, Programmable Logic Controller (PLC), is outdated and needs several upgrades for essential functioning of the automatic transfer of electrical feeders.

1.2 Designated Contact

In compliance with the Procurement Lobbying Law, Rebecca Beattie, Contract Management Specialist I, NYS Office of General Services, Division of Financial Administration has been designated as the Primary Contact for this procurement and may be reached by email or phone for all inquiries regarding this solicitation.

Rebecca Beattie, Contract Management Specialist I
NYS Office of General Services
Financial Administration – Agency Procurement Office
32nd Floor, Corning Tower Bldg., Empire State Plaza
Albany, New York 12242
Phone: 1-518-474-5981
Email: Rebecca.Beattie@ogs.ny.gov

In the event the designated contact is not available, the alternate designated contacts are:

Paige Corning, Contract Management Specialist II
NYS Office of General Services
Financial Administration – Agency Procurement Office
32nd Floor, Corning Tower Bldg., Empire State Plaza
Albany, New York 12242
Phone: 1-518-474-8209
Email: Paige.Corning@ogs.ny.gov

Andrea Garavelli, Contract Management Specialist III
NYS Office of General Services
Financial Administration – Agency Procurement Office
32nd Floor, Corning Tower Bldg., Empire State Plaza
Albany, New York 12242
Phone: 1-518-474-9139
Email: Andrea.Garavelli@ogs.ny.gov

For inquires related specifically to Minority Women-Owned Business Enterprises (MWBE) provisions of this procurement solicitation, the designated contacts are:

Joshua Quiles, Compliance Specialist II
Office of General Services / Office of Business Diversity / MWBE/SDVOB
29th Floor, Corning Tower Bldg., Empire State Plaza
Albany, NY 12242

Phone: 1-518-408-0432
Email: OGS.sm.MWBE@ogs.ny.gov

For inquires related specifically to Service-Disabled Veteran Owned Businesses (SDVOB) provisions of this procurement solicitation, the designated contact is:

New York State Office of General Services Division of Service-Disabled Veterans' Business Development
32nd Floor, Corning Tower Bldg., Empire State Plaza
Albany, New York 12242
Phone: 1-518-474-2015
Email: veteransdevelopment@ogs.ny.gov

For inquiries related specifically to insurance requirements of this solicitation, contact:

New York State Office of General Services Bureau of Risk and Insurance Management
32nd Floor, Corning Tower Bldg., Empire State Plaza
Albany, New York 12242
Phone: 1-518-473-0310
Email: ogs.sm.insrev@ogs.ny.gov

1.3 Key Events

The Table below outlines the schedule for important action dates.

OGS Issues Invitation for Bid (IFB) #2791	July 21, 2023
Mandatory Site Visit	August 15, 2023, at 10:00am
Deadline for Submission of Bidder Questions	August 18, 2023
OGS Issues Responses to Written Questions (estimated)	August 23, 2023
Bid Due Date	September 6, 2023, at 2:00 pm
Contract Start Date	Upon OSC Approval

1.4 Minimum Bidder Qualifications

Bidders are advised that the State's intent is to ensure that only responsive, responsible, qualified and reliable Contractors enter into a contract to perform the work as defined in this document.

The State considers the following qualifications to be a pre-requisite in order to be considered a qualified Bidder for purposes of the solicitation. Bidders not meeting the qualifications below will be disqualified. Bidders may not use a subcontractor's or any other entity's qualifications to meet requirements.

The following minimum requirements **must** be met by each Bidder:

1. The Bidder shall have at least five years of experience with one of the following:
    A. Industrial programmable logic controllers;
    B. Automatic switching electrical systems;
    C. Micro-electric systems;
    D. Manufacturing, programming or commissioning electrical gear upgrades.

OR

2. The Bidder's senior management personnel has been actively engaged cumulatively for the Bidder and/or another firm in which they also served as senior personnel for at least the past five years as stated above in Section 1.4, 1. A. – D. Provided, however, in the case of the latter situation, the bidder must have been in business for at least six months.

The State of New York retains the right to request any additional information pertaining to the Contractor's ability, qualifications, and procedures used to accomplish all work under this contract, as it deems necessary to ensure safe and satisfactory work.

1.5 Mandatory Site Visit

Bidders intending to submit a bid will be required to attend a site visit, which will include an informational meeting and a tour of the electrical facility located in Building 22 at the W. Averell Harriman State Office Campus in Albany, NY on the date and time indicated in Section 1.3 - Key Events. The meeting location will be in the facility lobby. This is the only date and time available for inspection. Alternate dates for additional site inspections **will not** be available. Attendees will be required to sign in and provide basic company and contact information. This information will be used to verify attendance and to communicate any changes to the solicitation (addenda). Therefore, it is imperative that the provided information be legible and accurate. **Failure to attend the mandatory site visit will result in rejection of the bid.**

The Facilitator of the event will publicly announce the official start time of the site visit, which announcement shall be made no sooner than the time stated in Section 1.3 - Key Events. Prospective Bidders arriving after the official start time of the site visit will be precluded from attending the site visit, and therefore ineligible to submit a responsive bid.

Due to security restrictions, all Bidders are strongly encouraged to pre-register with Rebecca Beattie at Rebecca.Beattie@ogs.ny.gov at least 24 hours in advance of the site visit date and time as listed above in Section 1.3 - Key Events. It is recommended that attendees arrive at the building at least 30 minutes prior to scheduled time with photo identification.

In accordance with State Finance Law §139-j(3)(a)(3), this mandatory site visit is covered by the permissible subject matter authorization. A vendor is authorized to speak with representatives other than Designated Contact(s) for the sole purpose of the site visit (to arrange attendance, during the conduct of the visit and to pose questions regarding the site).

The site visit will provide an opportunity for Bidders to see first-hand the existing equipment, the tasks to be performed and the special needs of the facility. Questions during the site visit will be permitted. It is suggested that the Bidder note the question and ask at the end of the tour.

Verbal answers are not official answers. All questions asked during and after the tour must be submitted via email to the designated contact for this solicitation no later than the date and time indicated in Section 1.3 - Key Events. Official answers to all questions will be distributed in the form of an addendum posted to the OGS Bid Calendar. All attendees will be provided a link via email to obtain any and all addenda related to this solicitation. Only answers provided by addendum are considered official.

NOTE: If there are any questions Bidders would like addressed at the site visit, Bidders should submit them in writing as instructed in Section 3.1 – IFB Questions and Clarifications, to the designated contact prior to the date of the site visit. Questions during the site visit will be permitted, however, only questions submitted in writing and answered via addendum will be considered official.

1.6 Glossary of Terms

“Commissioner” shall mean the Commissioner of General Services or duly authorized representative.

“Contractor” shall mean a successful company awarded a contract pursuant to this IFB.

“Invitation for Bid” or “IFB” shall mean this document.

“Issuing Office” shall mean the Office of General Services, Division of Financial Administration.

“Bidder” shall mean any person, partnership, firm, corporation or other authorized entity submitting a bid to the State pursuant to this IFB.

The “State” shall mean The People of the State of New York, which shall also mean the New York State Office of General Services.

“Facility Manager and/or their designee” is the OGS employee responsible for the day-to-day operation and safety of the buildings and grounds on which the work is being performed.

2. Scope of Work

2.1 General Scope

A PLC upgrade is required for two electrical room switchboards: Switchboard Substation SB-1 - FO# 31213696-002 (Main-Tie-Tie-Gen-Main) and Switchboard Substation A&B - FO# 21295878-007 (Gen-Main-Tie-Main-Gen).

OGS is seeking a Contractor to replace the End of Production Modicon Quantum Hot Standby Series PLC package with a new Schneider Electric Modicon M580 Hot Standby PLC package.

All integration, functional testing, commissioning, facility automation and on-site OGS staff training of the new systems and equipment shall be included.

2.2 Switchboard ATO Modernization

The Contractor shall:

1. Provide on-site testing and verification of the existing system per the Sequence of Operations prior to upgrading. If deficiencies are discovered, Contractor shall notify the Facility Manager immediately.
2. Provide a new Schneider Electric Modicon M580 Hot Standby system processor consisting of two PLC processors, two power supplies, and two input/output rack assemblies.
3. Provide an updated PLC program for the new processors.
4. Upgrade the human machine interface (HMI) panel with a new 15” screen, mounted in the same location.
5. Upgrade existing Crompton sensing relays with new Basler relays, 27/47, 59 and 81.
6. Upgrade relays to support the switchboard main gear and emergency generator to ensure continuity of electrical operations.
7. Upgrade the existing MGE uninterrupted power supply (UPS) unit to a new American Power Corporation (APC) Smart UPS.
8. Provide testing reports of all new and existing components on all systems within two weeks of completion.

2.3 Hazardous Materials (HAZMAT)

The electrical substructure and superstructure switchgear may contain HAZMAT. The Contractor shall sample, test, and provide results to OGS for any Asbestos Containing Material (ACM) and/or lead paint discovered. Work shall be discontinued until the Facility Manager is notified. If abatement is necessary, the Contractor shall coordinate with OGS Utilities.

2.4 Commissioning and Training

1. Commissioning of the new systems will be based on manufacturer’s procedures and existing sequence of operations.
2. Contractor shall provide OGS Utilities with onsite training for new control systems and equipment operation.

2.5 Service Requirements

1. Contractor shall coordinate all utility power outages, if required. Outage lengths will be discussed and agreed upon with OGS Utilities prior to the commencement of work. Contractor must provide free and clear access to perform the above work.
2. Contractor shall be responsible for the removal and replacement of hardware, as well as software programming.
3. Contractor shall provide a de-energized board for retrofit of the new ATO and control power transformers.
4. Contractor shall be responsible for de-energizing utility equipment and re-feeding downstream equipment to accommodate a power outage.
5. There will be additional charges for Contractor delays and for additional trips to the site because of work cancellation/reschedule. In the event a planned power outage is cancelled by an entity other than the Contractor, the Contractor can invoice for reimbursement of mobilization costs.
6. An OGS Utilities electrical escort familiar with the facility and electrical circuits shall be required for all Contractor on-site work.
7. All working areas shall be restricted to qualified personnel only.

2.6 Staffing Requirements

Contractor shall perform all services diligently and effectively under the oversight and direction of OGS Facility Manager.

1. All Contractor's staff shall conduct themselves in a professional manner with OGS staff and with the general public.
2. All Contractor's staff shall comply with all rules and requirements of this contract, including the drug and alcohol policies (Refer to Section 5.5 – General Requirements).

2.7 Warranties

Contractor warrants that the services acquired under this Contract will be provided in a professional and workmanlike manner in accordance with industry standards.

All materials and workmanship provided under this contract shall be warranted for a minimum of one year. Where Contractor, product manufacturer or service provider generally offers additional or more advantageous warranties, such additional or more advantageous warranty shall apply. All warranties contained in this Contract shall survive the termination of this Contract.

2.8 Prevailing Wage Rate Advisory Notice

DOL Article 8 - Prevailing Rate Case Number PRC #2023004767 has been assigned to the project.

To view the PDF file of your wage schedule, Article 8, click on: https://apps.labor.ny.gov/wpp/publicViewProject.do?method=showIt&id=1548770 Contractors are reminded that the payment of prevailing wages and supplements is a requirement of ALL contracts for public works. Contractors are reminded that Prevailing Wage Rates are subject to periodic adjustments. It is the Contractor's responsibility to ensure they are in compliance with current Prevailing

Wage Rates throughout the term of the contract. Information indicating that prevailing wages are not being paid on a public works project will be forwarded to the New York State Department of Labor for investigation. Willful violations of the prevailing wage provisions of the Labor Law may result in debarment from the bidding and award of public contracts. NOTE: ALL PUBLIC WORKS CONTRACTS, REGARDLESS OF DOLLAR VALUE, REQUIRE THE PAYMENT OF PREVAILING WAGES AND SUPPLEMENTS.

Contractors are required to supply each of their subcontractors with copies of the prevailing rate schedule and to obtain an affidavit acknowledging receipt and agreeing to pay required wages before entering into a subcontract. Contractors are responsible for assuring that their subcontractors pay prevailing wages and supplements. NOTE: CONTRACTORS ARE FURTHER REQUIRED TO POST THE PREVAILING WAGE RATES AT THE WORK SITE ON BULLETIN BOARDS PROVIDED BY THE FACILITY MANAGER AND INFORM EMPLOYEES OF THE POSTING. FACILITY MANAGERS WILL ENFORCE THIS PROVISION.

Contractors are advised that the Office of General Services may make random inquiries of employees of both prime and subcontractors as to the rate of wages being paid and may request certified copies of one or more weekly payrolls of a Contractor or any subcontractor to verify proper payment of wages. Any discrepancy found in information supplied will be reported to the Department of Labor for investigation.

2.9 Background Checks

Requirements of this clause apply to the Contractor performing on-site work for OGS. Background checks shall be performed at no additional cost to the State. The cost to the Contractor for performing requirements of this section shall be taken into consideration when the Bidder calculates its bid prices in response to this solicitation. Contractor shall not be entitled to charge separately, or otherwise be reimbursed, for any costs incurred in complying with this background check requirement.

For purposes of this clause, the following definitions apply:

On-Site: ``On-site'' refers to any State-owned or leased space open to the public or at which State business operations are conducted.

Suitability: ``Suitability'' refers to identifiable character traits and past conduct that are reasonably sufficient to indicate whether a given individual is likely to be able to perform the requirements of a contract at OGS on-site locations without undue risk to the interests of the State.

Suitability determination: A ``suitability determination'' is a determination that there are reasonable grounds to believe that an individual will likely be able to perform the contract requirements on-site without undue risk to the interests of the State.

<u>Applicability</u>

Contractors shall perform background checks and make suitability determinations on Contractor employees before the individual employees can perform on-site contract services for the Office of General Services.

Contractor shall maintain a continuous list of background checks and suitability determinations noted above and shall provide this list to the Facility Manager prior to the contract commencement date. The

list shall be updated and resubmitted to the Facility Manager as changes occur, continually keeping the Facility Manager updated.

The Commissioner of General Services, or her designee (the "Commissioner"), on a case-by-case basis, may, either temporarily or permanently, waive the requirements of this clause, in whole or in part, if they determine in writing that background checks and suitability determinations are not necessary at a specific location, or for a specific individual, in order to protect the State's interests.

Background Check

The Contractor is responsible for completing background checks and making suitability determinations on its employees prior to the employees beginning on-site work. Compliance with the requirement for performing a background check and making a suitability determination shall not be construed as providing a Contractor employee clearance to secured areas. Contractors are required to maintain records of background checks and suitability determinations for the term of the contract, and to make them available to the State when requested.

At a minimum, the background check and suitability determination must include an evaluation of:

1. Verification that the individual is not listed on a national watched person database. The following link has information about data available https://www.treasury.gov/resource-center/sanctions/SDN-List/Pages/default.aspx. The following link has a PDF file of a list of SPECIALLY DESIGNATED NATIONALS AND BLOCKED PERSONS https://www.treasury.gov/ofac/downloads/sdnlist.pdf;

2. Criminal History checks to be performed either by using a national database that contains criminal histories and supplement this search by checks of NYS Office of Court Administration ("NYSOCA") and comparable searches of states where the person has lived, worked, or attended school during the past five years; OR by obtaining the record of convictions from NYSOCA directly and from their equivalents from other states where the person might have lived, worked, or attended school during the last five years;

3. DMV driving records;

4. Social Security Number trace;

5. Verification of U.S. citizenship or legal resident status; and

6. Residence (past three years) (should be requested on employment application to compare against data from DMV license and other searches for verification);

Background Check Guidelines

In making a suitability determination, the Contractor shall consider the following factors and evaluate them against the work to be performed, the performance location, and the degree of risk to the State:

1. Any loyalty or terrorism issue;

2. Patterns of conduct (e.g., alcohol/drug abuse, financial irresponsibility/major liabilities, dishonesty, unemployability for negligence or misconduct, criminal conduct);

3. Dishonorable military discharge;

4. Felony and misdemeanor offenses; and

5. Employment related misconduct involving dishonesty, criminal or violent behavior.

The Contractor shall evaluate any adverse information about an individual by considering the following factors before making a suitability determination:

1. The nature, extent, and seriousness of the conduct;

2. The circumstances surrounding the conduct;

3. The frequency and recency of the conduct;

4. The individual's age and maturity at the time of the conduct;

5. The presence or absence of rehabilitation and other pertinent behavior changes;

6. The potential for pressure, coercion, exploitation, or duress;

7. The likelihood of continuation of the conduct;
8. How, and if, the conduct bears upon potential job responsibilities; and

9. The employee's employment history before and after the conduct.

Each suitability determination should be documented in a narrative. If negative items are mitigated by subsequent passage of time or completion of any relevant programs that are rehabilitative in nature, this rationale should be included in the narrative. A negative suitability determination must be supported by a finding that the adverse information has a direct bearing on the potential job duties or that it is deemed sufficiently serious to bar the employee from a State site.

Employee Removal

Whenever a Contractor becomes aware that any employee working at an on-site location under an OGS contract becomes an unacceptable risk to the State; the Contractor shall immediately remove that employee from the site, notify the Commissioner that such a removal has taken place, and replace them with a qualified substitute immediately. If the approval of the Commissioner was initially required for the removed employee, Commissioner approval is required for the replacement employee.

Commissioner Notification

Prior to commencement of on-site contract performance, the Contractor shall notify the Commissioner that the background checks and suitability determinations required by this clause have been completed for affected individuals.

2.10 OSHA (Occupational Safety & Health Administration) Training Requirements

OGS Facility Manager's Obligations

Prior to beginning contract work/work assignment, the OGS Facility Manager or Designee shall inform or make available the Contractor/Contractor's representative(s) of the known specific hazard(s) and chemical(s) they may encounter while performing their contract obligations. For example: testing of materials may be performed, or previous reports may be available to inform on the location of Asbestos Containing Materials, lead or other environmental concerns if present, and any site-specific work practices that may be necessary to conduct work safely and in compliance with federal or state standards and OGS procedures such as those involving Lockout/Tagout and electrical procedures.

The Contractor/Contractor's Representative(s) shall also be provided with information about the use and provisions for Personal Protective Equipment required for the work. **Contractor/Contractor's Representative shall provide a signed acknowledgement to the OGS Facility Manager or OGS Designee that they were provided with this information.**

Contractor / Contract Employee Obligations

General Contract Obligations:

These requirements only apply to on-site work at a State property.

Prior to or upon first reporting to the work location for assignment, the Contractor/Contractor employee(s) and employees of subcontractors must present to the OGS Facility Manager or OGS Designee proof of completion of the OSHA required training for the following, topic areas including but not limited to:

1) OSHA 10-hour training for work in construction or related assignments
2) Hazard Communication,
3) Personal Protective Equipment.

For environmental health and safety emergencies, an emergency contact must be provided for the Facility Manager or designee to contact prior to any work commencing. Any changes to this contact, including name and or contact information must be communicated to the OGS Designee immediately.

Specific Field-of-Work Requirements

In circumstances where specific OSHA or NYS Department of Labor (DOL) regulated work is required, the Contractor/Contract Employee(s) shall have all pertinent and up-to-date certifications beyond the "awareness" level as required by regulations for the specific work. On-site employee will be trained to do the work, supervised by higher knowledge/training, as required by OSHA/DOL regulations.

It is the Contractor's responsibility to provide the OGS Facility Manager or OGS Designee with all employee updates and/or renewals for the above general contract obligations and specific field of work requirements specified training.

The Contractor must coordinate with OGS to be informed of the site's Emergency Action Plan.

Note: Contractor's/Contractor's Employee(s) and employees of subcontractors' failure to provide such documentation to the OGS Facility Manager or OGS Designee upon or prior to employee reporting to their initial work assignment may result in OGS rejecting the employee(s) until that documentation is provided.

3. Bid Submission

3.1 IFB Questions and Clarifications

There will be an opportunity for submission of questions and/or requests for clarification. Questions and/or clarifications must be submitted via email to the Designated Contact:

Rebecca Beattie, Contract Management Specialist I
OGS Division of Financial Administration
32nd Floor, Corning Tower, ESP
Albany, NY 12242
Phone: 1-518-474-5981
E-mail: Rebecca.Beattie@ogs.ny.gov

All questions must cite the particular page, section, and paragraph number, where applicable. Please submit questions as early as possible following receipt of the IFB. The final deadline for submission of any questions/clarifications regarding this IFB is listed in Section 1.3 – Key Events. Questions received after the deadline may not be answered. OGS will post an addendum at https://ogs.ny.gov/procurement/bid-opportunities with all questions and responses on or about the date listed in Section 1.3 – Key Events. Any additional addenda will be posted to the same location.

3.2 Bid Format and Content

In order for the State to evaluate bids fairly and completely, Bidders are strongly encouraged to follow the format set forth herein and should provide all of the information requested. All items requested in this submission section should be provided and addressed as clearly as possible. Failure to conform to the stated requirements may necessitate rejection of the bid.

Bidders may be requested to provide clarification based on the State's evaluation procedure. Any clarification will be considered a formal part of the Bidder's original proposal. If further clarification is needed during the evaluation period, OGS will contact the Bidder.

Note: OGS reserves the right to request any additional information deemed necessary to ensure that the Bidder is able to fulfill the requirements of the contract.

1. Cover Letter: The cover letter should confirm that the Bidder understands all the terms and conditions contained in this IFB and will comply with all the provisions of this IFB. Further, that should the contract be awarded to your company, you would be prepared to begin services on the date indicated in Section 1.3 – Key Events. The cover letter should also include the full contact information of the Bidders Representative that OGS shall contact regarding the bid. A Bidder representative authorized to make contractual obligations must sign the cover letter.
2. Minimum Qualifications: Bidders must submit sufficient information to prove their ability to meet the minimum qualifications as set forth in Section 1.4.
3. Experience & Operational Plan: Bidders must describe their capabilities to provide the services required in this IFB by providing the following:
    a. A description of Bidder's experience with programmable logic controller replacement.
    b. Staffing plan, including the use of any subcontractors.
4. Pricing: Bidders shall submit a completed Attachment 1 - Bid Proposal Form. Each item must be complete with no lines omitted. Bidders shall not provide alternative pricing or deviate from the Bid Proposal Form. Alternative pricing methodologies will not be considered and may result in the rejection of the bid.

5. Administrative Submission:
    a. All required completed forms from IFB Appendix B.
    b. **SDVOB.** This procurement includes SDVOB participation goals of which all bidders must comply. Refer to Appendix F of this solicitation for specific details pertaining to this procurement opportunity. The directory of New York State Certified SDVOBs can be utilized to find SDVOB businesses to meet this requirement: https://online.ogs.ny.gov/SDVOB/search
    c. Signed bid addenda (if any).
    d. Important Notes:
        i. Insurance – Bidders are reminded of the insurance requirements as described in Appendix D. The selected Bidder will be required to provide all necessary documentation upon notification of selection.
        ii. MWBE & EEO Requirements - Bidders are reminded of the requirements as described in Appendix E.
        iii. Vendor Responsibility - Bidders are reminded of the requirement as described in Section 5.11 and are requested to complete the online questionnaire located on the OSC VendRep System website prior to bid submission. If the vendor has previously certified responsibility online, it shall ensure that the VRQ was recertified in the last six months.
        iv. Document Consistency - An award will only be made to the entity which has submitted bid. All submitted documents must be consistent with official name of bidding entity, FEIN and NYS Vendor ID number.

3.3 Bid Preparation

All bids must be completed in ink or machine produced. Bids submitted handwritten in pencil will be disqualified.

3.4 Packaging of IFB Response

Please submit:

1. One original of the Attachment 1 - Bid Proposal Form
2. One original of the Cover Letter; Minimum Qualifications information; Experience and Operational Plan
3. One original of the Administrative Submission

Please provide one digital record (Thumb Drive) containing the above submission items. If there are any differences between the paper submission and the electronic submission, the paper submission shall take precedence.

Originals contain a unique wet signature for each of the signed and notarized pages. Exact copies can be photocopied and do not require a unique wet signature.

All bid documents must be submitted by mail, hand delivery, overnight carrier or certified mail in a package showing the following information on the outside:

1. Bidder's complete name and address
2. Solicitation Number: IFB #2791
3. Bid Due Date and Time: (as stated in Section 1.3 - Key Events)

4. Bid for: Programmable Logic Controller Replacement at Building 22

Failure to complete all information on the bid envelope and/or packages may necessitate the premature opening of the bid and may compromise confidentiality.

3.5 Instructions for Bid Submission

Note that these instructions supersede the generic instructions posted on the OGS website bid calendar.

Only those Bidders who furnish all required information and meet the mandatory requirements will be considered.

Submit all required bid documents to the NYS Office of General Services - Division of Financial Administration at the following address:

OGS Financial Administration, Agency Procurement Office
32nd Floor, Corning Tower, Empire State Plaza,
Albany, NY 12242
Attn: Rebecca Beattie
Bid# 2791

E-MAIL OR FAX BID SUBMISSIONS ARE NOT ACCEPTABLE AND WILL NOT BE CONSIDERED.

The State of New York will not be held liable for any cost incurred by the Bidder for work performed in the preparation and production of a bid or for any work performed prior to the formal execution and approval of a contract.

Bids must be received in the above office on or before 2:00 PM on the date indicated in Section 1.3 - Key Events. Bidders assume all risks for timely, properly submitted deliveries. Bidders mailing their bid must allow sufficient mail delivery time to ensure receipt of their bid at the specified location no later than the specified date and time.

The received time of bids will be determined by the clock at the above noted location.

Any Bid received at the designated location after the established time will be considered a Late Bid. A Late Bid may be rejected and disqualified from award. Notwithstanding the foregoing, a Late Bid may be accepted in the Commissioner's sole discretion where (i) no timely Bids meeting the requirements of the Solicitation are received, or (ii) the Bidder has demonstrated to the satisfaction of the Commissioner that the Late Bid was caused solely by factors outside the control of the Bidder. However, in no event will the Commissioner be under any obligation to accept a Late Bid.

The basis for any determination to accept a Late Bid shall be documented in the procurement record.

Bids must remain open and valid for 180 days from the due date, unless the time for awarding the contract is extended by mutual consent of NYS OGS and the Bidder. A bid shall continue to remain an effective offer, firm and irrevocable, subsequent to such 180-day period until either tentative award of the contract(s) by Issuing Office is made or withdrawal of the bid in writing by Bidder. Tentative award of the contract(s) shall consist of written notice to that effect by the Issuing Office to the successful Bidder. This IFB remains the property of the State at all times, and all responses to this IFB, once delivered, become the property of the State.

Important Building Access Procedures for Delivered Bids:

Building Access procedures are in effect at the Corning Tower. Photo identification is required. All visitors must register for building access, for delivering bids. **Vendors are encouraged to pre-register by**

contacting the designated contact at 518-474-5981 at least 24 hours prior to arrival. Pre-registered visitors are to report to the visitor desk located at the Concourse level of the Corning Tower. Upon presentation of appropriate photo identification, the visitor will be allowed access to the building.

Upon arrival at the visitor desk, visitors that have not pre-registered will be directed to a designated phone to call the OGS Finance Office. The Finance Office will then enter the visitor's information into the building access system. Access will not be allowed until the system has been updated. Visitors are encouraged to pre-register to ensure timely access to the building. Vendors who intend to deliver bids or conduct business with OGS should allow extra time to comply with these procedures. These procedures may change or be modified at any time.

Visitor parking information can be viewed at the following OGS web site:

https://empirestateplaza.ny.gov/parking

4. Administrative Information

4.1 Issuing Office

This IFB is being released by the New York State Office of General Services, Division of Financial Administration, on behalf of the OGS Division of Real Property and Facilities Management.

4.2 Method of Award

OGS intends to award one contract to the lowest responsive and responsible Bidder. The lowest Bidder shall be determined by the Grand Total Bid as represented on Attachment 1 – Bid Proposal Form.

Upon determination of the lowest responsive and responsible bid, a contract will be sent to the successful Bidder for signature and shall be returned to the Issuing Office for all necessary State approvals. Upon final approval, a completely executed contract will be delivered to the Contractor.

The Grand Total bid amount of the successful Bidder shall be used to establish the total contract value. The established total contract value shall not be exceeded.

A discount for early payment does not affect bid amounts nor is it considered in making awards, except that a discount may be considered in resolving tie bids.

4.3 Price

Bidders must submit pricing using Attachment 1 - Bid Proposal Form. Any alterations, qualifiers, etc. will result in rejection.

The Contractor agrees that from the effective date of the contract until contract termination, the rates charged by the Contractor and paid for by NYS OGS will be equal to or lower than any rates provided by the Contractor to other customers for like services.

If the Bidder offers an early payment discount for payments made in less than 30 days after receipt of a proper invoice, please detail the discount by providing, in the appropriate place on the Attachment 1 Bid form, the percentage of discount and the specific number of days within which the payment must be made for the discount to apply. If Bidder offers multiple discounts, please provide the details for each discount offered (for example: 2%/15 days; 1%/20 days). A discount for early payment does not affect bid amounts nor is it considered in making awards, except that a discount may be considered in resolving tie bids.

4.4 Term of Contract

The contract resulting from this solicitation will become effective upon OSC Approval and will continue for a one-year term.

4.5 Method of Payment

Invoices will be processed after the completion of each substation installation in accordance with established procedures of the Office of General Services and the Office of the State Comptroller (OSC), and payments will be subject to the prompt payment provisions of Article XI-A of the New York State Finance Law.

Each company invoice must be itemized and include the following information: Name of NYS agency being billed; Contract ID number; Purchase Order number; Vendor name; Company FEIN; Vendor ID

number; a unique invoice number; date(s) of service(s); a detailed description of services performed; and dollar amount requested in accordance with contract or PO rates.

Invoices without the above stated information will be returned to Contractor to be completed as required in the paragraph above. Payment will not be issued and will not be due and owing until a corrected invoice is received and approved by OGS.

All Invoices are to be submitted for payment to:

Office of General Services
C/O BSC / Accounts Payable
1220 Washington Ave., Bldg. 5, 5th Fl or Accountspayable@ogs.ny.gov
Albany, New York 12226

Also, a copy of the invoice and reports must be forwarded to:

NYS Office of General Services
Real Property and Facilities Management
Empire State Plaza, Corning Tower, 39th Floor
Albany, NY 12242

Or by email: ogs.sm.rpmpurchasingsupportservicesunit@ogs.ny.gov

4.6 Electronic Payment

Contractor shall provide complete and accurate billing invoices in order to receive payment. Billing invoices submitted must contain all information and supporting documentation required by the contract, the agency, and the State Comptroller. Payment for invoices submitted by the Contractor shall only be rendered electronically unless payment by paper check is expressly authorized by the Commissioner, in the Commissioner's sole discretion, due to extenuating circumstances. Such electronic payment shall be made in accordance with ordinary State procedures and practices. The Contractor shall comply with the State Comptroller's procedures to authorize electronic payments. Information is available at the following website: http://www.sfs.ny.gov/index.php/vendors, by e-mail at Helpdesk@sfs.ny.gov, or by phone at 518-457-7717. Contractor acknowledges that it will not receive payment on any invoices submitted under this Contract if it does not comply with the State Comptroller's electronic payment procedures, except where the Commissioner has expressly authorized payment by paper check as set forth above.

Please note that in conjunction with New York State's implementation of a new Statewide financial system, the Office of the State Comptroller requires all vendors doing business with New York State agencies to complete a substitute W-9 form. Vendors registering for electronic payment can complete the W-9 form when they register. Vendors already registered for electronic payment are requested to go to the above website and complete the Substitute W-9 form and submit following the instructions provided.

4.7 Past Practice

The failure to exercise any right hereunder in the past shall not operate as a waiver of such right. No breach of this Agreement shall be deemed waived unless such waiver shall be in writing and signed by the party claimed to have waived said right. No waiver of any breach of the Agreement at any time in the past shall constitute a waiver of subsequent breach.

4.8 Exceptions and Extraneous Terms

The Issuing Office will consider all requests to waive any solicitation requirement. The term "solicitation requirement" as used herein shall include any and all terms and conditions included in the solicitation documents. Bidders should be aware that failure to obtain a waiver of any bid requirement in advance of bid submission, and/or inclusion of extraneous terms in the form of exceptions, assumptions, qualifiers, ranges, modifications, etc. with bid submission, may result in rejection of Bidder's proposal and disqualification from the bidding process.

Bidders wishing to obtain an exemption or waiver for any part of this solicitation must contact the Issuing Office in writing by the questions due date as identified in Section 1.3 - Key Events. The request must cite the specific section and requirement in question, and clearly identify any proposed alternative. Requests will be considered and responded to in writing, either with the answers to questions as identified in Section 1.3 - Key Events (if the response results in a change to the solicitation), or directly to the requesting vendor.

4.9 Dispute Resolution

It is the policy of the Office of General Services' Financial Administration to provide vendors with an opportunity to administratively resolve disputes, complaints or inquiries related to proposal solicitations, contract awards, and contract administration. OGS Financial Administration encourages vendors to seek resolution of disputes informally, through consultation with OGS Financial Administration staff, prior to commencing a formal dispute process. All such matters will be accorded full, impartial and timely consideration. A copy of the OGS Financial Administration Dispute Resolution Procedures for Vendors may be obtained by contacting the designated contact person identified in the solicitation.

During the term of the contract, if either party notifies the other of a dispute or dissatisfaction, the other party will make a good faith effort to solve or settle dispute amicably, including meeting with the other party to diligently attempt to reach a satisfactory result. In the event of a dispute, the parties will continue to fulfill their obligations hereunder during the dispute resolution process. The parties agree to proceed in good faith to avoid disputes and resolve disputes that cannot be avoided at the lowest level possible. If party representatives are unable to resolve the dispute or reach a satisfactory result within twenty days of written notice of a dispute, the dispute will be referred to successive higher levels of each organization for final decision.

4.10 Prime Contractor Responsibilities

The State will contract only with the successful Bidder who is the Prime Contractor. The Issuing Office considers the Prime Contractor, the sole Contractor with regard to all provisions of the IFB, and the contract resulting from the IFB. The Prime Contractor will be fully responsible for the work being completed by their subcontractors. A foreman from the Prime Contractor must be on site overseeing the subcontractors' removal and install of all pumps and motors. No subcontract entered into by the Contractor shall relieve the Contractor of any liabilities or obligations in this IFB or the resultant contract. The Contractor accepts full responsibility for the actions of any employee or subcontractor(s) who carry out any of the provisions of any contract resulting from this IFB.

4.11 Examination of Contract Documents

1. Each Bidder is under an affirmative duty to inform itself by personal examination of the specifications of the proposed work and by such other means as it may select, of the character, quality and extent of the work to be performed and the conditions under which the contract is to be executed.

2. Each Bidder shall examine specifications and all other data or instruction pertaining to the work. No pleas of ignorance of conditions that may be encountered or of any other matter concerning the work to be performed in the execution of the contract will be accepted by the State as an excuse for any failure or omission on the part of the Bidder to fulfill every detail of all the requirements of the documents governing the work. The Bidder, if awarded the contract, will not be allowed any extra compensation by reason of any matter or thing concerning which such Bidder might have fully informed itself prior to bidding.
3. Any Bidder in doubt as to the true meaning of any part of the specification or the proposed contract documents shall submit to Rebecca Beattie, Division of Financial Administration, 32nd Floor, Corning Tower Building, Empire State Plaza, Albany, New York 12242 e-mail: Rebecca.Beattie@ogs.ny.gov a written request for an interpretation thereof. If a major change is involved to which all Bidders must be informed, such request for interpretation shall be delivered, in writing, no later than the question due date listed in Section 1.3- Key Events. Any interpretation of the proposed documents will be made only by an addendum duly issued. A copy of such addendum will be e-mailed to Bidders who have registered Intent to Submit a Bid.
4. Any addendum issued prior to the bid due date must be acknowledged by signature, dated and be submitted as part of the Administrative Bid. In awarding a contract, any addenda will become a part thereof.
5. Any verbal information obtained from, or statements made by, representatives of the Commissioner of General Services at the time of examination of the documents, pre-bid conference, or site visit shall not be construed as in any way amending contract documents. Only such corrections or addenda as are issued, in writing, to all Bidders shall become a part of the contract.

4.12 Rules of Construction

Words of the masculine and feminine genders shall be deemed and construed to include the neuter gender. Unless the context otherwise indicates, a singular word shall include the plural and vice versa, and words importing persons shall include corporations and associations, including public bodies, as well as natural persons. The terms “hereby,” “hereof,” “hereto,” “herein,” “hereunder,” and any similar terms, as used in this IFB, refer to this IFB.

4.13 Use of State Tools and Equipment

Contractor shall be permitted to use any available, State-owned, fixed and non-fixed tools, equipment and lifting gear (“State Equipment”) in the performance of the Contract, provided the use of the State Equipment is within the scope of the services to be performed under the Contract.

Prior to the commencement of any work under this Contract, Contractor shall inspect the State Equipment at each location to determine if Contractor desires to use any available State Equipment. All State Equipment that will be used by Contractor shall be listed on Attachment 2 – State Tools and Equipment Use Request, attached to and made a part of this Contract. The parties may from time to time amend Attachment 2 – State Tools and Equipment Use Request, and the amendment shall be attached to this Contract and be made a part of this Contract as if it were an original part of this Contract. Contractor shall not be permitted to use any State Equipment that is not listed on Attachment 2 – State Tools and Equipment Use Request.

State Equipment is available for the use of the Contractor on an “as is/where is” basis, with no representations or warranties as to condition, fitness for use, or compliance with applicable laws, regulations, or requirements. Contractor acknowledges that it is familiar with how to use the State Equipment and is aware of the risks and dangers that may arise as a result of the use (and improper use) of the State Equipment, which may include, without limitation, tripping hazards, falls from a height, and objects falling from above, which are inherently dangerous and could result in, among other things and without limitation, cuts, scrapes, puncture wounds, or bruises; sprained joints; bruised or torn tendons, ligaments, and muscles; broken bones; spinal injuries; concussions or other brain injuries; and even death.

Contractor agrees that the State Equipment may only be used by Contractor’s employees, agents or subcontractors who have been properly trained to use the equipment and, if applicable, have read the manufacturer’s operations manuals and have been certified or accredited to appropriately operate the State Equipment.

Contractor shall routinely inspect the State Equipment and use each item of State Equipment only for its intended purposes and only if there are no defects or deficiencies noted. If Contractor believes that there is a need for repair, replacement, or maintenance of any of the State Equipment, Contractor shall not use the defective or deficient State Equipment, but Contractor shall notify OGS in accordance with the “Notices” section of any Contract resulting from this solicitation, and OGS shall then, in its sole discretion, determine if repair, replacement, or maintenance is required, and cause the same to be performed in a timely manner at the sole cost and expense of OGS; provided, however, that repairs, replacements, or maintenance that are necessary due to the negligence or willful misconduct of Contractor, its employees, agents, or subcontractors shall be performed by OGS at Contractor’s sole cost and expense.

Contractor assumes all risks of injury to itself, its employees, and its property arising out of the use of the State Equipment and hereby releases, indemnifies, and holds harmless the People of the State of New York, and its officers, employees, and agents (“Releasees”), with respect to any and all injury, disability, death, or loss or damage to person or property, whether arising from the negligence of the Releasees or otherwise, to the fullest extent permitted by law.

The State Equipment shall remain the property of OGS and may not be removed by the Contractor. At the expiration or earlier termination of this Contract, the State Equipment shall be returned to OGS in the same condition it was in at the commencement of the Contract, reasonable wear and tear excepted.

5. Contract Clauses and Requirements

5.1 Appendix A / Order of Precedence

Appendix A — Standard Clauses for New York State Contracts, dated June 2023, attached hereto, is hereby expressly made a part of this solicitation document as fully as if set forth at length herein. The agreement resulting from a successful award will include the following documents. Conflicts between these documents will be resolved in the following descending order of precedence:

1. Appendix A (June 2023)
2. Contract Service Agreement
3. OGS Invitation for Bid Number 2791, including any Addenda
4. Selected Contractor's Bid including Attachment 1

5.2 Procurement Lobbying Requirement

Pursuant to State Finance Law §139-j and §139-k, this Solicitation includes and imposes certain restrictions on communications between OGS and a Vendor during the procurement process. A Vendor is restricted from making contacts from the earliest posting, on a governmental entity's website, in a newspaper of general circulation, or in the procurement opportunities newsletter of intent to solicit offers/bids through final award and approval of the Procurement Contract by OGS and, if applicable, the Office of the State Comptroller ("Restricted Period") to other than designated staff unless it is a contact that is included among certain statutory exceptions set forth in State Finance Law §139-j(3)(a). Designated staff, as of the date hereof, is identified on the first page and in Section 1.2. OGS employees are also required to obtain certain information when contacted during the restricted period and make a determination of the responsibility of the Vendor pursuant to these two statutes. Certain findings of non-responsibility can result in rejection for contract award and in the event of two findings within a four-year period; the Vendor is debarred from obtaining governmental Procurement Contracts. Further information about these requirements can be found on the OGS website: http://www.ogs.ny.gov/acpl/

5.3 Tax and Finance Clause

TAX LAW § 5-A:

Section 5-a of the Tax Law, as amended, effective April 26, 2006, requires certain contractors awarded state contracts for commodities, services and technology valued at more than $100,000 to certify to the Department of Taxation and Finance (DTF) that they are registered to collect New York State and local sales and compensating use taxes. The law applies to contracts where the total amount of such contractors' sales delivered into New York State are in excess of $300,000 for the four quarterly periods immediately preceding the quarterly period in which the certification is made, and with respect to any affiliates and subcontractors whose sales delivered into New York State exceeded $300,000 for the four quarterly periods immediately preceding the quarterly period in which the certification is made.

This law imposes upon certain contractors the obligation to certify whether or not the contractor, its affiliates, and its subcontractors are required to register to collect state sales and compensating use tax and contractors must certify to DTF that each affiliate and subcontractor exceeding such sales threshold is registered with DTF to collect New York State and local sales and compensating use taxes. The law prohibits the State Comptroller, or other approving agency, from approving a contract awarded to a contractor meeting the registration requirements but who is not so registered in accordance with the law.

Contractor certification forms and instructions for completing the forms are attached to this IFB. Form ST-220-TD must be filed with and returned directly to DTF. Unless the information upon which the ST-220-TD is based changes, this form only needs to be filed once with DTF. If the information changes for the contractor, its affiliate(s), or its subcontractor(s) a new Form ST-220-TD must be filed with DTF.

Form ST-220-CA must be filed with the bid and submitted to the procuring covered agency certifying that the contractor filed the ST-220-TD with DTF. Proposed contractors should complete and return the certification forms within two business days of request (if the forms are not completed and returned with bid submission). Failure to make either of these filings may render a Bidder non-responsive and non-responsible. Bidders shall take the necessary steps to provide properly certified forms within a timely manner to ensure compliance with the law.

Vendors may call DTF at **1-800-698-2909** for any and all questions relating to Section 5-a of the Tax Law and relating to a company's registration status with the DTF. For additional information and frequently asked questions, please refer to the DTF web site: http://www.tax.ny.gov

5.4 Freedom of Information Law / Trade Secrets

During the evaluation process, the content of each bid will be held in confidence and details of any bid will not be revealed (except as may be required under the Freedom of Information Law or other State law). The Freedom of Information Law provides for an exemption from disclosure for trade secrets or information the disclosure of which would cause injury to the competitive position of commercial enterprises. This exception would be effective both during and after the evaluation process. Should you feel your firm's bid contains any such trade secrets or other confidential or proprietary information, you must submit a request to except such information from disclosure. Such request must be in writing, must state the reasons why the information should be excepted from disclosure and must be provided at the time of submission of the subject information. This can be accomplished by completion of the applicable question on the contractor information page in Appendix B hereto. Requests for exemption of the entire contents of a bid from disclosure have generally not been found to be meritorious and are discouraged. Kindly limit any requests for exemption of information from disclosure to bona fide trade secrets or specific information, the disclosure of which would cause a substantial injury to the competitive position of your firm.

5.5 General Requirements

A. The Bidder agrees to adhere to all State and Federal laws and regulations in connection with the contract.

B. The Bidder agrees to notify OGS of any changes in the legal status or principal ownership of the firm, 45 days in advance of said change.

C. The Bidder agrees that in any contract resulting from this IFB it shall be completely responsible for its work, including any damages or breakdowns caused by its failure to take appropriate action.

D. The Bidder agrees that any contract resulting from this IFB may not be assigned, transferred, conveyed or the work subcontracted without the prior written consent of OGS.

E. For reasons of safety and public policy, in any contract resulting from this IFB, the use of illegal drugs and/or alcoholic beverages by the Contractor or its personnel shall not be permitted while performing any phase of the work herein specified.

F. For purposes of any contract resulting from this IFB, the State will not be liable for any expense incurred by the Contractor for any parking fees or as a consequence of any traffic infraction or parking violations attributable to employees of the Contractor.

G. OGS interpretation of specifications shall be final and binding upon the Contractor.

H. The Commissioner of OGS will make no allowance or concession to the Bidder for any alleged misunderstanding because of quantity, quality, character, location or other conditions.

I. Should it appear that there is a real or apparent discrepancy between different sections of specifications concerning the nature, quality or extent of work to be furnished, it shall be assumed that the Bidder has based its bid on the more expensive option. Final decision will rest with OGS.

J. INSPECTION – For purposes of any contract resulting from this IFB the quality of service is subject to inspection and may be made at any reasonable time by the State of New York. Should it be found that quality of services being performed is not satisfactory and that the requirements of the specifications are not being met, OGS may terminate the contract and employ another Contractor to fulfill the requirements of the contract. The existing Contractor shall be liable to the State of New York for costs incurred on account thereof.

K. STOP WORK ORDER – OGS reserves the right to stop the work covered by this IFB and any contract(s) resulting there from at any time that it is deemed the Contractor is unable or incapable of performing the work to the State's satisfaction. In the event of such stopping, OGS shall have the right to arrange for the completion of the work in such manner as it may deem advisable and if the cost thereof exceeds the amount of the proposal, the Contractor shall be liable to the State of New York for any such costs on account thereof. In the event that OGS issues a stop work order for the work as provided herein, the Contractor shall have ten working days to respond thereto before any such stop work order shall become effective. Provided, however, that if an emergency situation exists, as reasonably determined by OGS, then the stop work order shall be effective immediately.

L. OGS reserves the right to reject and bar from the facility any employee hired by the Contractor.

5.6 Subcontractors

The State will contract only with the successful Bidder who is the Prime Contractor. The Issuing Office considers the Prime Contractor, the sole Contractor with regard to all provisions of the solicitation and the contract resulting from the solicitation. When bidding, any known / planned use of subcontractors must be disclosed in detail with bid submission. If subcontractors are to be used for base scope services, it shall be understood that the bid price includes the cost of the subcontractor, and no additional markups will be allowed.

No subcontract entered into by the Contractor shall relieve the Contractor of any liabilities or obligations in this IFB or the resultant contract. The Contractor accepts full responsibility for the actions of any employee or subcontractor/subcontractor's employee(s) who carry out any of the provisions of any contract resulting from this IFB.

The Contractor's use of subcontractors shall not diminish the Contractor's obligations to complete the work in accordance with the contract. The Contractor shall coordinate and control the work of the subcontractors.

The Contractor shall be responsible for informing the subcontractors of all terms, conditions, and requirements of the contract documents.

During the term of the Contract, before any part of the contract shall be sublet, the Contractor shall submit to the Director of Utilities Management or their designee, Governor Nelson A. Rockefeller Empire State Plaza, 39th Floor, Albany, New York 12242, in writing, the name of each proposed subcontractor and obtain written consent to such subcontractor. The names shall be submitted in ample time to permit acceptance or rejection of each proposed subcontractor without causing delay in the work of this contract. The Contractor shall promptly furnish such information as the Director of Utilities Management may require concerning the proposed subcontractor's ability and qualifications.

5.7 Procurement Rights

The State of New York reserves the right to:

1. Reject any and all bids received in response to this Solicitation.
2. Disqualify a Bidder from receiving the award if the Bidder, or anyone in the Bidder's employ, has previously failed to perform satisfactorily in connection with public bidding or contracts.
3. Correct Bidders' mathematical errors and waive or modify other minor irregularities in bids received, after prior notification to the Bidder.

4. Adjust any Bidder's expected costs of the bid price based on a determination of the evaluation committee that the selection of the said Bidder will cause the State to incur additional costs.
5. Utilize any and all ideas submitted in the bids received.
6. Negotiate with Bidders responding to this Solicitation within the Solicitation requirements to serve the best interests of the State.
7. Begin contract negotiations with another bidding Contractor(s) in order to serve the best interests of the State of New York should the State of New York be unsuccessful in negotiating a contract with the selected Contractor within 21 days of selection notification.
8. Waive any non-material requirement not met by all Bidders.
9. Not make an award from this Solicitation.
10. Make an award under this Solicitation in whole or in part.
11. Make multiple contract awards pursuant to the Solicitation.
12. Have any service completed via separate competitive bid or other means, as determined to be in the best interest of the State.
13. Seek clarifications of bids.
14. Disqualify any Bidder whose conduct and/or bid fails to conform to the requirements of the IFB.
15. Prior to the bid opening, amend the IFB specifications to correct errors or oversights, or to supply additional information, as it becomes available.
16. Waive any requirements that are not material.
17. If two or more bids are found to be substantially equivalent, the Commissioner of OGS, at their sole discretion, will determine award using the pre-established process. For best value procurements, cost will be the determining factor.

Note: The State is not liable for any cost incurred by a Bidder in the preparation and production of a bid or for any work performed prior to the issuance of a contract.

5.8 Extent of Services

OGS reserves the right to re-negotiate at its discretion, to reduce the amount of services provided under any contract resulting from this solicitation. This reduction in services shall be effectuated by written amendment to the contract and subject to approval by the Office of the State Comptroller.

5.9 Debriefings

Pursuant to Section 163(9)(c) of the State Finance Law, any unsuccessful Bidder may request a debriefing regarding the reasons that the Bid submitted by the Bidder was not selected for award. Requests for a debriefing must be made within 15 calendar days of notification by OGS that the Bid submitted by the Bidder was not selected for award. Requests should be submitted in writing to a designated contact identified in the Solicitation.

5.10 Termination

A) Termination

The Office of General Services may, upon 30 days' notice, terminate the contract resulting from this IFB in the event of the awarded Bidder's failure to comply with any of the proposal's requirements unless the awarded Bidder obtained a waiver of the requirement.

In addition, OGS may also terminate any contract resulting from this IFB upon ten days written notice if the Contractor makes any arrangement for the assignment for the benefit of creditors.

Furthermore, OGS shall have the right, in its sole discretion, at any time to terminate a contract resulting from this IFB, or any unit portion thereof, with or without cause, by giving 30 days written notice of termination to the Contractor.

B) Procurement Lobbying Termination

The Office of General Services reserves the right to terminate this Agreement in the event it is found that the certification filed by the Contractor in accordance with New York State Finance Law §139-k was intentionally false or intentionally incomplete. Upon such finding, the Office of General Services may exercise its termination right by providing written notification to the Contractor in accordance with the written notification terms of this Agreement.

C) Effect of Termination

Any termination by OGS under this Section shall in no event constitute or be deemed a breach of any contract resulting from this IFB and no liability shall be incurred by or arise against the Office of General Services, its agents and employees therefore for lost profits or any other damages.

5.11 NYS Vendor Responsibility

OGS conducts a review of prospective contractors ("Bidders") to provide reasonable assurances that the Bidder is responsive and responsible. A For-Profit Business Entity Questionnaire (hereinafter "Questionnaire") is used for non-construction contracts and is designed to provide information to assess a Bidder's responsibility to conduct business in New York based upon financial and organizational capacity, legal authority, business integrity, and past performance history. By submitting a bid, Bidder agrees to fully and accurately complete the Questionnaire. The Bidder acknowledges that the State's execution of the Contract will be contingent upon the State's determination that the Bidder is responsible, and that the State will be relying upon the Bidder's responses to the Questionnaire when making its responsibility determination.

OGS recommends each Bidder file the required Questionnaire online via the New York State VendRep System. To enroll in and use the VendRep System, please refer to the VendRep System Instructions and User Support for Vendors available at the Office of the State Comptroller's (OSC) website, https://www.osc.state.ny.us/vendrep/index.htm or to enroll, go directly to the VendRep System online at https://www.osc.state.ny.us/vendrep/info_vrsystem.htm.

OSC provides direct support for the VendRep System through user assistance, documents, online help, and a help desk. The OSC Help Desk contact information is located at http://www.osc.state.ny.us/portal/contactbuss.htm. Bidder's opting to complete the paper questionnaire can access this form and associated definitions via the OSC website at: http://www.osc.state.ny.us/vendrep/forms_vendor.htm .

In order to assist the State in determining the responsibility of the Bidder prior to Contract Award, the Bidder must complete and certify (or recertify) the Questionnaire no more than six months prior to the bid due date. A Bidder's Questionnaire cannot be viewed by OGS until the Bidder has certified the Questionnaire. It is recommended that all Bidders become familiar with all of the requirements of the Questionnaire in advance of the bid opening to provide sufficient time to complete the Questionnaire.

The Bidder agrees that if it is awarded a Contract the following shall apply:

The Contractor shall at all times during the Contract term remain responsible. The Contractor agrees, if requested by the Commissioner of OGS or her designee, to present evidence of its continuing legal authority to do business in New York State, integrity, experience, ability, prior performance, and organizational and financial capacity.

The Commissioner of OGS or her designee, in her sole discretion, reserves the right to suspend any or all activities under this Contract, at any time, when she discovers information that calls into question the responsibility of the Contractor. In the event of such suspension, the Contractor will be given written notice outlining the particulars of such suspension. Upon issuance of such notice, the Contractor must

comply with the terms of the suspension order. Contract activity may resume at such time as the Commissioner of OGS or her designee issues a written notice authorizing a resumption of performance under the Contract.

Upon written notice to the Contractor, and a reasonable opportunity to be heard with appropriate OGS officials or staff, the Contract may be terminated by the Commissioner of OGS or her designee at the Contractor's expense where the Contractor is determined by the Commissioner of OGS or her designee to be non-responsible. In such event, the Commissioner of OGS or her designee may complete the contractual requirements in any manner she may deem advisable and pursue available legal or equitable remedies for breach.

In no case shall such termination of the Contract by the State be deemed a breach thereof, nor shall the State be liable for any damages for lost profits or otherwise, which may be sustained by the Contractor as a result of such termination.

5.12 New York State Vendor File Registration

Prior to being awarded a contract pursuant to this Solicitation, the Bidder(s) must be registered in the New York State Vendor File (Vendor File) administered by the Office of the State Comptroller (OSC). This is a central registry for all vendors who do business with New York State Agencies and the registration must be initiated by a State Agency. Following the initial registration, unique New York State ten-digit vendor identification numbers will be assigned to your company for usage on all future transactions with New York State. Additionally, the Vendor File enables vendors to use the Vendor Self-Service application to manage all vendor information in one central location for all transactions related to the State of New York. If Bidder is already registered in the New York State Vendor File, list the ten-digit vendor ID number on the Contractor Information page included in Appendix B of this solicitation.

If the Bidder is not currently registered in the Vendor File and is recommended for award, OGS shall request completion of OSC Substitute W-9 Form. A fillable form with instructions can be found at the link below. The Office of General Services will initiate the vendor registration process for all Bidders recommended for Contract Award. Once the process is initiated, registrants will receive an email from OSC that includes the unique ten-digit vendor identification number assigned to the company and instructions on how to enroll in the online Vendor Self-Service application. For more information on the vendor file please visit the following website: www.osc.state.ny.us/vendors/index.htm. Form to be completed: www.osc.state.ny.us/vendors/forms/ac3237s_fe.pdf.

5.13 Ethics Compliance

All Bidders/Contractors and their employees must comply with the requirements of §§73 and 74 of the Public Officers Law, other state codes, rules, regulations, and executive orders establishing ethical standards for the conduct of business with New York State. In signing any contract resulting from this IFB, the Contractor certifies full compliance with those provisions for any present or future dealings, transactions, sales, contracts, services, offers, relations, etc., involving New York State and/or its employees. Failure to comply with those provisions may result in disqualification from the bidding process, termination of contract, and/or other civil or criminal proceedings as required by law.

5.14 Indemnification

The Contractor shall assume all risks of liability for its performance, or that of any of its officers, employees, subcontractors or agents, of any contract resulting from this solicitation and shall be solely responsible and liable for all liabilities, losses, damages, costs or expenses, including attorney's fees, arising from any claim, action or proceeding relating to or in any way connected with the performance of this Agreement and covenants and agrees to indemnify and hold harmless the State of New York, its agents, officers and employees, from any and all claims, suits, causes of action and losses of whatever kind and nature, arising out of or in connection with its performance of any contract resulting from this solicitation, including negligence, active or passive or improper conduct of the Contractor, its officers,

agents, subcontractors or employees, or the failure by the Contractor, its officers, agents, subcontractors or employees to perform any obligations or commitments to the State or third parties arising out of or resulting from any contract resulting from this solicitation. Such indemnity shall not be limited to the insurance coverage herein prescribed.

5.15 Force Majeure

Neither party hereto will be liable for losses, defaults, or damages under any contract resulting from this solicitation which result from delays in performing, or inability to perform, all or any of the obligations or responsibilities imposed upon it pursuant to the terms and conditions of this solicitation, due to or because of acts of God, the public enemy, acts of government, earthquakes, floods, strikes, civil strife, fire or any other cause beyond the reasonable control of the party that was so delayed in performing or so unable to perform provided that such party was not negligent and shall have used reasonable efforts to avoid and overcome such cause. Such party will resume full performance of such obligations and responsibilities promptly upon removal of any such cause.

5.16 Encouraging Use of New York State Businesses in Contract Performance

New York State businesses have a substantial presence in State contracts and strongly contribute to the economies of the state and the nation. In recognition of the economic activity and leadership such businesses offer, Contractors are strongly encouraged and expected to consider New York State businesses in the fulfillment of the requirements of this agreement. Such partnering may be as subcontractors, suppliers, protégés or other supporting roles.

Bidders need to be aware that all authorized users of this contract will be strongly encouraged, to the maximum extent practical and consistent with legal requirements, to use responsible and responsive New York State businesses in purchasing commodities that are of equal quality and functionality and in utilizing services and technology. Furthermore, Bidders are reminded that they must continue to utilize small, minority and women-owned businesses, consistent with current State law.

Utilizing New York State businesses in State contracts will help create more private sector jobs, rebuild New York's infrastructure, and maximize economic activity to the mutual benefit of the contractor and its New York State business partners. New York State businesses will promote the contractor's optimal performance under the contract, thereby fully benefiting the public sector programs that are supported by associated procurements.

Public procurements can drive and improve the State's economic engine through promotion of the use of New York businesses by its contractors. The State therefore expects Bidders to provide maximum assistance to New York businesses in their use of the contract. The potential participation by all kinds of New York businesses will deliver great value to the State and its taxpayers.

5.17 Sexual Harassment Prevention

Pursuant to N.Y. State Finance Law § 139-l, every bid made on or after January 1, 2019 to the State or any public department or agency thereof, where competitive bidding is required by statute, rule or regulation, for work or services performed or to be performed or goods sold or to be sold, and where otherwise required by such public department or agency, shall contain a certification that the Bidder has and has implemented a written policy addressing sexual harassment prevention in the workplace and provides annual sexual harassment prevention training to all of its employees. Such policy shall, at a minimum, meet the requirements of N.Y. State Labor Law § 201-g.

N.Y. State Labor Law § 201-g provides requirements for such policy and training and directs the Department of Labor, in consultation with the Division of Human Rights, to create and publish a model sexual harassment prevention guidance document, sexual harassment prevention policy and sexual harassment prevention training program that employers may utilize to meet the requirements of N.Y.

State Labor Law § 201-g. The model sexual harassment prevention policy, model sexual harassment training materials, and further guidance for employers, can be found online at the following URL: https://www.ny.gov/combating-sexual-harassment-workplace/employers.

Pursuant to N.Y. State Finance Law § 139-l, any bid by a corporate Bidder containing the certification required above shall be deemed to have been authorized by the board of directors of such Bidder, and such authorization shall be deemed to include the signing and submission of such bid and the inclusion therein of such statement as the act and deed of the Bidder.

If the Bidder cannot make the required certification, such Bidder shall so state and shall furnish with the bid a signed statement that sets forth in detail the reasons that the Bidder cannot make the certification. After review and consideration of such statement, OGS may reject the bid or may decide that there are sufficient reasons to accept the bid without such certification.

The certification required above can be found on Appendix B – NYS Required Certifications, which Bidder must submit with its bid.

5.18 Contractors Compensatory Liability

In the event that the contractor fails to complete any of the specified services within the timeframe required, OGS reserves the right to have such work completed either by another contractor or with in-house staff. In any such event, the contractor shall be liable to reimburse OGS for all costs incurred to complete the work. OGS further reserves the right to collect such reimbursement from any outstanding payments due to the contractor.

APPENDIX A

STANDARD CLAUSES FOR NEW YORK STATE CONTRACTS

PLEASE RETAIN THIS DOCUMENT
FOR FUTURE REFERENCE.

June 2023

TABLE OF CONTENTS

		Page
1.	Executory Clause	3
2.	Non-Assignment Clause	3
3.	Comptroller's Approval	3
4.	Workers' Compensation Benefits	3
5.	Non-Discrimination Requirements	3
6.	Wage and Hours Provisions	3-4
7.	Non-Collusive Bidding Certification	4
8.	International Boycott Prohibition	4
9.	Set-Off Rights	4
10.	Records	4
11.	Identifying Information and Privacy Notification	4
12.	Equal Employment Opportunities For Minorities and Women	5
13.	Conflicting Terms	5
14.	Governing Law	5
15.	Late Payment	5
16.	No Arbitration	5
17.	Service of Process	5
18.	Prohibition on Purchase of Tropical Hardwoods	5-6
19.	MacBride Fair Employment Principles	6
20.	Omnibus Procurement Act of 1992	6
21.	Reciprocity and Sanctions Provisions	6
22.	Compliance with Breach Notification and Data Security Laws	6
23.	Compliance with Consultant Disclosure Law	6
24.	Procurement Lobbying	7
25.	Certification of Registration to Collect Sales and Compensating Use Tax by Certain State Contractors, Affiliates and Subcontractors	7
26.	Iran Divestment Act	7
27.	Admissibility of Contract	7

STANDARD CLAUSES FOR NYS CONTRACTS

The parties to the attached contract, license, lease, amendment or other agreement of any kind (hereinafter, "the contract" or "this contract") agree to be bound by the following clauses which are hereby made a part of the contract (the word "Contractor" herein refers to any party other than the State, whether a contractor, licenser, licensee, lessor, lessee or any other party):

1. EXECUTORY CLAUSE. In accordance with Section 41 of the State Finance Law, the State shall have no liability under this contract to the Contractor or to anyone else beyond funds appropriated and available for this contract.

2. NON-ASSIGNMENT CLAUSE. In accordance with Section 138 of the State Finance Law, this contract may not be assigned by the Contractor or its right, title or interest therein assigned, transferred, conveyed, sublet or otherwise disposed of without the State's previous written consent, and attempts to do so are null and void. Notwithstanding the foregoing, such prior written consent of an assignment of a contract let pursuant to Article XI of the State Finance Law may be waived at the discretion of the contracting agency and with the concurrence of the State Comptroller where the original contract was subject to the State Comptroller's approval, where the assignment is due to a reorganization, merger or consolidation of the Contractor's business entity or enterprise. The State retains its right to approve an assignment and to require that any Contractor demonstrate its responsibility to do business with the State. The Contractor may, however, assign its right to receive payments without the State's prior written consent unless this contract concerns Certificates of Participation pursuant to Article 5-A of the State Finance Law.

3. COMPTROLLER'S APPROVAL. In accordance with Section 112 of the State Finance Law, if this contract exceeds $50,000 (or $75,000 for State University of New York or City University of New York contracts for goods, services, construction and printing, and $150,000 for State University Health Care Facilities) or if this is an amendment for any amount to a contract which, as so amended, exceeds said statutory amount, or if, by this contract, the State agrees to give something other than money when the value or reasonably estimated value of such consideration exceeds $25,000, it shall not be valid, effective or binding upon the State until it has been approved by the State Comptroller and filed in his office. Comptroller's approval of contracts let by the Office of General Services, either for itself or its customer agencies by the Office of General Services Business Services Center, is required when such contracts exceed $85,000. Comptroller's approval of contracts established as centralized contracts through the Office of General Services is required when such contracts exceed $125,000, and when a purchase order or other procurement transaction issued under such centralized contract exceeds $200,000.

4. WORKERS' COMPENSATION BENEFITS. In accordance with Section 142 of the State Finance Law, this contract shall be void and of no force and effect unless the Contractor shall provide and maintain coverage during the life of this contract for the benefit of such employees as are required to be covered by the provisions of the Workers' Compensation Law.

5. NON-DISCRIMINATION REQUIREMENTS. To the extent required by Article 15 of the Executive Law (also known as the Human Rights Law) and all other State and Federal statutory and constitutional non-discrimination provisions, the Contractor will not discriminate against any employee or applicant for employment, nor subject any individual to harassment, because of age, race, creed, color, national origin, citizenship or immigration status, sexual orientation, gender identity or expression, military status, sex, disability, predisposing genetic characteristics, familial status, marital status, or domestic violence victim status or because the individual has opposed any practices forbidden under the Human Rights Law or has filed a complaint, testified, or assisted in any proceeding under the Human Rights Law. Furthermore, in accordance with Section 220-e of the Labor Law, if this is a contract for the construction, alteration or repair of any public building or public work or for the manufacture, sale or distribution of materials, equipment or supplies, and to the extent that this contract shall be performed within the State of New York, Contractor agrees that neither it nor its subcontractors shall, by reason of race, creed, color, disability, sex, or national origin: (a) discriminate in hiring against any New York State citizen who is qualified and available to perform the work; or (b) discriminate against or intimidate any employee hired for the performance of work under this contract. If this is a building service contract as defined in Section 230 of the Labor Law, then, in accordance with Section 239 thereof, Contractor agrees that neither it nor its subcontractors shall by reason of race, creed, color, national origin, age, sex or disability: (a) discriminate in hiring against any New York State citizen who is qualified and available to perform the work; or (b) discriminate against or intimidate any employee hired for the performance of work under this contract. Contractor is subject to fines of $50.00 per person per day for any violation of Section 220-e or Section 239 as well as possible termination of this contract and forfeiture of all moneys due hereunder for a second or subsequent violation.

6. WAGE AND HOURS PROVISIONS. If this is a public work contract covered by Article 8 of the Labor Law or a building service contract covered by Article 9 thereof, neither Contractor's employees nor the employees of its subcontractors may be required or permitted to work more than the number of hours or days stated in said statutes, except as otherwise provided in the Labor Law and as set forth in prevailing wage and supplement schedules issued by the State Labor Department. Furthermore, Contractor and its subcontractors must pay at least the prevailing wage rate and pay or provide the prevailing supplements, including the premium rates for overtime pay, as determined by the State Labor Department in

accordance with the Labor Law. Additionally, effective April 28, 2008, if this is a public work contract covered by Article 8 of the Labor Law, the Contractor understands and agrees that the filing of payrolls in a manner consistent with Subdivision 3-a of Section 220 of the Labor Law shall be a condition precedent to payment by the State of any State approved sums due and owing for work done upon the project.

7. NON-COLLUSIVE BIDDING CERTIFICATION. In accordance with Section 139-d of the State Finance Law, if this contract was awarded based upon the submission of bids, Contractor affirms, under penalty of perjury, that its bid was arrived at independently and without collusion aimed at restricting competition. Contractor further affirms that, at the time Contractor submitted its bid, an authorized and responsible person executed and delivered to the State a non-collusive bidding certification on Contractor's behalf.

8. INTERNATIONAL BOYCOTT PROHIBITION. In accordance with Section 220-f of the Labor Law and Section 139-h of the State Finance Law, if this contract exceeds $5,000, the Contractor agrees, as a material condition of the contract, that neither the Contractor nor any substantially owned or affiliated person, firm, partnership or corporation has participated, is participating, or shall participate in an international boycott in violation of the federal Export Administration Act of 1979 (50 USC App. Sections 2401 et seq.) or regulations thereunder. If such Contractor, or any of the aforesaid affiliates of Contractor, is convicted or is otherwise found to have violated said laws or regulations upon the final determination of the United States Commerce Department or any other appropriate agency of the United States subsequent to the contract's execution, such contract, amendment or modification thereto shall be rendered forfeit and void. The Contractor shall so notify the State Comptroller within five (5) business days of such conviction, determination or disposition of appeal (2 NYCRR § 105.4).

9. SET-OFF RIGHTS. The State shall have all of its common law, equitable and statutory rights of set-off. These rights shall include, but not be limited to, the State's option to withhold for the purposes of set-off any moneys due to the Contractor under this contract up to any amounts due and owing to the State with regard to this contract, any other contract with any State department or agency, including any contract for a term commencing prior to the term of this contract, plus any amounts due and owing to the State for any other reason including, without limitation, tax delinquencies, fee delinquencies or monetary penalties relative thereto. The State shall exercise its set-off rights in accordance with normal State practices including, in cases of set-off pursuant to an audit, the finalization of such audit by the State agency, its representatives, or the State Comptroller.

10. RECORDS. The Contractor shall establish and maintain complete and accurate books, records, documents, accounts and other evidence directly pertinent to performance under this contract (hereinafter, collectively, the "Records"). The Records must be kept for the balance of the calendar year in which they were made and for six (6) additional years thereafter. The State Comptroller, the Attorney General and any other person or entity authorized to conduct an examination, as well as the agency or agencies involved in this contract, shall have access to the Records during normal business hours at an office of the Contractor within the State of New York or, if no such office is available, at a mutually agreeable and reasonable venue within the State, for the term specified above for the purposes of inspection, auditing and copying. The State shall take reasonable steps to protect from public disclosure any of the Records which are exempt from disclosure under Section 87 of the Public Officers Law (the "Statute") provided that: (i) the Contractor shall timely inform an appropriate State official, in writing, that said records should not be disclosed; and (ii) said records shall be sufficiently identified; and (iii) designation of said records as exempt under the Statute is reasonable. Nothing contained herein shall diminish, or in any way adversely affect, the State's right to discovery in any pending or future litigation.

11. IDENTIFYING INFORMATION AND PRIVACY NOTIFICATION. (a) Identification Number(s). Every invoice or New York State Claim for Payment submitted to a New York State agency by a payee, for payment for the sale of goods or services or for transactions (e.g., leases, easements, licenses, etc.) related to real or personal property must include the payee's identification number. The number is any or all of the following: (i) the payee's Federal employer identification number, (ii) the payee's Federal social security number, and/or (iii) the payee's Vendor Identification Number assigned by the Statewide Financial System. Failure to include such number or numbers may delay payment. Where the payee does not have such number or numbers, the payee, on its invoice or Claim for Payment, must give the reason or reasons why the payee does not have such number or numbers.

(b) Privacy Notification. (1) The authority to request the above personal information from a seller of goods or services or a lessor of real or personal property, and the authority to maintain such information, is found in Section 5 of the State Tax Law. Disclosure of this information by the seller or lessor to the State is mandatory. The principal purpose for which the information is collected is to enable the State to identify individuals, businesses and others who have been delinquent in filing tax returns or may have understated their tax liabilities and to generally identify persons affected by the taxes administered by the Commissioner of Taxation and Finance. The information will be used for tax administration purposes and for any other purpose authorized by law. (2) The personal information is requested by the purchasing unit of the agency contracting to purchase the goods or services or lease the real or personal property covered by this contract or lease. The information is maintained in the Statewide Financial System by the Vendor Management Unit within the Bureau of State Expenditures, Office of the State Comptroller, 110 State Street, Albany, New York 12236.

12. EQUAL EMPLOYMENT OPPORTUNITIES FOR MINORITIES AND WOMEN. In accordance with Section 312 of the Executive Law and 5 NYCRR Part 143, if this contract is: (i) a written agreement or purchase order instrument, providing for a total expenditure in excess of $25,000.00, whereby a contracting agency is committed to expend or does expend funds in return for labor, services, supplies, equipment, materials or any combination of the foregoing, to be performed for, or rendered or furnished to the contracting agency; or (ii) a written agreement in excess of $100,000.00 whereby a contracting agency is committed to expend or does expend funds for the acquisition, construction, demolition, replacement, major repair or renovation of real property and improvements thereon; or (iii) a written agreement in excess of $100,000.00 whereby the owner of a State assisted housing project is committed to expend or does expend funds for the acquisition, construction, demolition, replacement, major repair or renovation of real property and improvements thereon for such project, then the following shall apply and by signing this agreement the Contractor certifies and affirms that it is Contractor's equal employment opportunity policy that:

(a) The Contractor will not discriminate against employees or applicants for employment because of race, creed, color, national origin, sex, age, disability or marital status, shall make and document its conscientious and active efforts to employ and utilize minority group members and women in its work force on State contracts and will undertake or continue existing programs of affirmative action to ensure that minority group members and women are afforded equal employment opportunities without discrimination. Affirmative action shall mean recruitment, employment, job assignment, promotion, upgradings, demotion, transfer, layoff, or termination and rates of pay or other forms of compensation;

(b) at the request of the contracting agency, the Contractor shall request each employment agency, labor union, or authorized representative of workers with which it has a collective bargaining or other agreement or understanding, to furnish a written statement that such employment agency, labor union or representative will not discriminate on the basis of race, creed, color, national origin, sex, age, disability or marital status and that such union or representative will affirmatively cooperate in the implementation of the Contractor's obligations herein; and

(c) the Contractor shall state, in all solicitations or advertisements for employees, that, in the performance of the State contract, all qualified applicants will be afforded equal employment opportunities without discrimination because of race, creed, color, national origin, sex, age, disability or marital status.

Contractor will include the provisions of "(a), (b) and (c)" above, in every subcontract over $25,000.00 for the construction, demolition, replacement, major repair, renovation, planning or design of real property and improvements thereon (the "Work") except where the Work is for the beneficial use of the Contractor. Section 312 does not apply to: (i) work, goods or services unrelated to this contract; or (ii) employment outside New York State. The State shall consider compliance by a contractor or subcontractor with the requirements of any federal law concerning equal employment opportunity which effectuates the purpose of this clause. The contracting agency shall determine whether the imposition of the requirements of the provisions hereof duplicate or conflict with any such federal law and if such duplication or conflict exists, the contracting agency shall waive the applicability of Section 312 to the extent of such duplication or conflict. Contractor will comply with all duly promulgated and lawful rules and regulations of the Department of Economic Development's Division of Minority and Women's Business Development pertaining hereto.

13. CONFLICTING TERMS. In the event of a conflict between the terms of the contract (including any and all attachments thereto and amendments thereof) and the terms of this Appendix A, the terms of this Appendix A shall control.

14. GOVERNING LAW. This contract shall be governed by the laws of the State of New York except where the Federal supremacy clause requires otherwise.

15. LATE PAYMENT. Timeliness of payment and any interest to be paid to Contractor for late payment shall be governed by Article 11-A of the State Finance Law to the extent required by law.

16. NO ARBITRATION. Disputes involving this contract, including the breach or alleged breach thereof, may not be submitted to binding arbitration (except where statutorily authorized), but must, instead, be heard in a court of competent jurisdiction of the State of New York.

17. SERVICE OF PROCESS. In addition to the methods of service allowed by the State Civil Practice Law & Rules ("CPLR"), Contractor hereby consents to service of process upon it by registered or certified mail, return receipt requested. Service hereunder shall be complete upon Contractor's actual receipt of process or upon the State's receipt of the return thereof by the United States Postal Service as refused or undeliverable. Contractor must promptly notify the State, in writing, of each and every change of address to which service of process can be made. Service by the State to the last known address shall be sufficient. Contractor will have thirty (30) calendar days after service hereunder is complete in which to respond.

18. PROHIBITION ON PURCHASE OF TROPICAL HARDWOODS. The Contractor certifies and warrants that all wood products to be used under this contract award will be in accordance with, but not limited to, the specifications and provisions of Section 165 of the State Finance Law, (Use of Tropical Hardwoods) which prohibits purchase and use of tropical hardwoods, unless specifically exempted, by the State or any governmental agency or political subdivision or public benefit corporation. Qualification for an exemption under this

law will be the responsibility of the contractor to establish to meet with the approval of the State.

In addition, when any portion of this contract involving the use of woods, whether supply or installation, is to be performed by any subcontractor, the prime Contractor will indicate and certify in the submitted bid proposal that the subcontractor has been informed and is in compliance with specifications and provisions regarding use of tropical hardwoods as detailed in § 165 State Finance Law. Any such use must meet with the approval of the State; otherwise, the bid may not be considered responsive. Under bidder certifications, proof of qualification for exemption will be the responsibility of the Contractor to meet with the approval of the State.

19. MACBRIDE FAIR EMPLOYMENT PRINCIPLES. In accordance with the MacBride Fair Employment Principles (Chapter 807 of the Laws of 1992), the Contractor hereby stipulates that the Contractor either (a) has no business operations in Northern Ireland, or (b) shall take lawful steps in good faith to conduct any business operations in Northern Ireland in accordance with the MacBride Fair Employment Principles (as described in Section 165 of the New York State Finance Law), and shall permit independent monitoring of compliance with such principles.

20. OMNIBUS PROCUREMENT ACT OF 1992. It is the policy of New York State to maximize opportunities for the participation of New York State business enterprises, including minority- and women-owned business enterprises as bidders, subcontractors and suppliers on its procurement contracts.

Information on the availability of New York State subcontractors and suppliers is available from:

NYS Department of Economic Development
Division for Small Business and Technology Development
625 Broadway
Albany, New York 12245
Telephone: 518-292-5100

A directory of certified minority- and women-owned business enterprises is available from:

NYS Department of Economic Development
Division of Minority and Women's Business Development
633 Third Avenue 33rd Floor
New York, NY 10017
646-846-7364
email: mwbebusinessdev@esd.ny.gov
https://ny.newnycontracts.com/FrontEnd/searchcertifieddirectory.asp

The Omnibus Procurement Act of 1992 (Chapter 844 of the Laws of 1992, codified in State Finance Law § 139-i and Public Authorities Law § 2879(3)(n)–(p)) requires that by signing this bid proposal or contract, as applicable, Contractors certify that whenever the total bid amount is greater than $1 million:

(a) The Contractor has made reasonable efforts to encourage the participation of New York State Business Enterprises as suppliers and subcontractors, including certified minority- and women-owned business enterprises, on this project, and has retained the documentation of these efforts to be provided upon request to the State;

(b) The Contractor has complied with the Federal Equal Opportunity Act of 1972 (P.L. 92-261), as amended;

(c) The Contractor agrees to make reasonable efforts to provide notification to New York State residents of employment opportunities on this project through listing any such positions with the Job Service Division of the New York State Department of Labor, or providing such notification in such manner as is consistent with existing collective bargaining contracts or agreements. The Contractor agrees to document these efforts and to provide said documentation to the State upon request; and

(d) The Contractor acknowledges notice that the State may seek to obtain offset credits from foreign countries as a result of this contract and agrees to cooperate with the State in these efforts.

21. RECIPROCITY AND SANCTIONS PROVISIONS. Bidders are hereby notified that if their principal place of business is located in a country, nation, province, state or political subdivision that penalizes New York State vendors, and if the goods or services they offer will be substantially produced or performed outside New York State, the Omnibus Procurement Act 1994 and 2000 amendments (Chapter 684 and Chapter 383, respectively, codified in State Finance Law § 165(6) and Public Authorities Law § 2879(5)) require that they be denied contracts which they would otherwise obtain. NOTE: As of May 2023, the list of discriminatory jurisdictions subject to this provision includes the states of South Carolina, Alaska, West Virginia, Wyoming, Louisiana and Hawaii.

22. COMPLIANCE WITH BREACH NOTIFICATION AND DATA SECURITY LAWS. Contractor shall comply with the provisions of the New York State Information Security Breach and Notification Act (General Business Law §§ 899-aa and 899-bb and State Technology Law § 208).

23. COMPLIANCE WITH CONSULTANT DISCLOSURE LAW. If this is a contract for consulting services, defined for purposes of this requirement to include analysis, evaluation, research, training, data processing, computer programming, engineering, environmental, health, and mental health services, accounting, auditing, paralegal, legal or similar services, then, in accordance with Section 163 (4)(g) of the State Finance Law (as amended by Chapter 10 of the Laws of 2006), the Contractor shall timely, accurately and properly comply with the requirement to submit an annual employment report for the contract to the agency that awarded the contract, the Department of Civil Service and the State Comptroller.

24. PROCUREMENT LOBBYING. To the extent this agreement is a "procurement contract" as defined by State Finance Law §§ 139-j and 139-k, by signing this agreement the contractor certifies and affirms that all disclosures made in accordance with State Finance Law §§ 139-j and 139-k are complete, true and accurate. In the event such certification is found to be intentionally false or intentionally incomplete, the State may terminate the agreement by providing written notification to the Contractor in accordance with the terms of the agreement.

25. CERTIFICATION OF REGISTRATION TO COLLECT SALES AND COMPENSATING USE TAX BY CERTAIN STATE CONTRACTORS, AFFILIATES AND SUBCONTRACTORS.
To the extent this agreement is a contract as defined by Tax Law § 5-a, if the contractor fails to make the certification required by Tax Law § 5-a or if during the term of the contract, the Department of Taxation and Finance or the covered agency, as defined by Tax Law § 5-a, discovers that the certification, made under penalty of perjury, is false, then such failure to file or false certification shall be a material breach of this contract and this contract may be terminated, by providing written notification to the Contractor in accordance with the terms of the agreement, if the covered agency determines that such action is in the best interest of the State.

26. IRAN DIVESTMENT ACT. By entering into this Agreement, Contractor certifies in accordance with State Finance Law § 165-a that it is not on the "Entities Determined to be Non-Responsive Bidders/Offerers pursuant to the New York State Iran Divestment Act of 2012" ("Prohibited Entities List") posted at: https://ogs.ny.gov/iran-divestment-act-2012

Contractor further certifies that it will not utilize on this Contract any subcontractor that is identified on the Prohibited Entities List. Contractor agrees that should it seek to renew or extend this Contract, it must provide the same certification at the time the Contract is renewed or extended. Contractor also agrees that any proposed Assignee of this Contract will be required to certify that it is not on the Prohibited Entities List before the contract assignment will be approved by the State.

During the term of the Contract, should the state agency receive information that a person (as defined in State Finance Law § 165-a) is in violation of the above-referenced certifications, the state agency will review such information and offer the person an opportunity to respond. If the person fails to demonstrate that it has ceased its engagement in the investment activity which is in violation of the Act within 90 days after the determination of such violation, then the state agency shall take such action as may be appropriate and provided for by law, rule, or contract, including, but not limited to, imposing sanctions, seeking compliance, recovering damages, or declaring the Contractor in default.

The state agency reserves the right to reject any bid, request for assignment, renewal or extension for an entity that appears on the Prohibited Entities List prior to the award, assignment, renewal or extension of a contract, and to pursue a responsibility review with respect to any entity that is awarded a contract and appears on the Prohibited Entities list after contract award.

27. ADMISSIBILITY OF REPRODUCTION OF CONTRACT. Notwithstanding the best evidence rule or any other legal principle or rule of evidence to the contrary, the Contractor acknowledges and agrees that it waives any and all objections to the admissibility into evidence at any court proceeding or to the use at any examination before trial of an electronic reproduction of this contract, in the form approved by the State Comptroller, if such approval was required, regardless of whether the original of said contract is in existence.

Solicitation 2791

Appendix B – Required Forms

Required Forms – Table of Contents

The following required forms are to be submitted with the proposer's proposal. The forms include:

- ☐ Contractor Information Page
- ☐ Corporate Acknowledgement (must be notarized)
- ☐ Offerer's Affirmation of Understanding of and Agreement pursuant to New York State Finance Law §139-j (3) and §139-j (6) (b)
- ☐ Offerer Disclosure of Prior Non-Responsibility Determinations
- ☐ Offerer's Certification of Compliance with State Finance Law §139-k(5)
- ☐ NYS Required Certifications
  - Nondiscrimination In Employment In Northern Ireland Macbride Fair Employment Principles
  - Non-Collusive Bidding Certification
  - Diesel Emission Reduction Act
  - Executive Order No 177 Certification
  - State Finance Law § 139-l Certification
  - Small Business Certification
- ☐ Certification Under Executive Order No. 16- Prohibiting State Agencies and Authorities from Contracting with Businesses Conducting Business in Russia
- ☐ ST-220 -TD Taxation & Finance Contractor Certification (Submitted directly to Taxation & Finance)
- ☐ ST-220 -CA Taxation and Finance Covered Agency Certification
- ☐ EEO 100- Equal Employment Opportunity Staffing Plan
- ☐ SDVOB Utilization Plan

Contractor Information

Solicitation Number **2791**

Offerer affirms that it understands and agrees to comply with the procedures of the Government Entity relative to permissible contacts as required by New York State Finance Law §139-j (3) and §139-j (6) (b).

Authorized Signature		Date	
Print Name		Title	
Company Name			
Federal ID Number		NYS Vendor ID Number	
Address			
City	State	Zip	County
Telephone Number	Ext	Toll Free Telephone	Ext
Fax Number		Toll Free Fax Number	
Email of Designated Contact			

Please identify if any of the following apply:

New York State Small Business as defined in Executive Law Section 310(20) and as detailed in the "New York State Required Certifications" included in Appendix B herein.	☐ Yes	☐ No
New York State Certified Minority Owned Business	☐ Yes	☐ No
New York State Certified Woman Owned Business	☐ Yes	☐ No
New York State Certified Service-Disabled Veteran-Owned Business	☐ Yes	☐ No
Do you understand and is your firm capable of meeting the insurance requirements to enter into a contract with New York State?	☐ Yes	☐ No
Will New York State Businesses be used in the performance of this contract?	☐ Yes	☐ No
If yes, identify New York State Business(es) that will be used; (Attach identifying information).		
Does your proposal meet all the requirements of this solicitation?	☐ Yes	☐ No

Is your firm making a claim that any portions of its bid should be exempt from release under the Freedom of Information Law, as they constitute trade secrets, or information the disclosure of which would cause a substantial injury to your firm's competitive position? **(Please review the clause entitled "Freedom of Information Law / Trade Secrets" of this Solicitation before answering).**	☐ Yes	☐ No
If "Yes", please identify the specific portions of your bid for which you are claiming this exemption, and the reasons for such claimed exemption. Attach additional sheets, if necessary		

INDIVIDUAL, CORPORATION, PARTNERSHIP, OR LLC ACKNOWLEDGMENT

STATE OF }

: **SS.:**

COUNTY OF }

On the ____ day of _____ in the year 20 ___, before me personally appeared _____ , known to me to be the person who executed the foregoing instrument, who, being duly sworn by me did depose and say that _he resides at

_____,

Town of _____ ,

County of _____ ,

State of _____ ; and further that:

[Check One]

(☐ If an individual): _he executed the foregoing instrument in his/her name and on his/her own behalf.

(☐ If a corporation): __he is the _____ of _____ , the corporation described in said instrument; that, by authority of the Board of Directors of said corporation, __he is authorized to execute the foregoing instrument on behalf of the corporation for purposes set forth therein; and that, pursuant to that authority, __he executed the foregoing instrument in the name of and on behalf of said corporation as the act and deed of said corporation.

(☐ If a partnership): __he is the _____ of _____, the partnership described in said instrument; that, by the terms of said partnership, __he is authorized to execute the foregoing instrument on behalf of the partnership for purposes set forth therein; and that, pursuant to that authority, __he executed the foregoing instrument in the name of and on behalf of said partnership as the act and deed of said partnership.

(☐ If a limited liability company): __he is a duly authorized member of _____, LLC, the limited liability company described in said instrument; that __he is authorized to execute the foregoing instrument on behalf of the limited liability company for purposes set forth therein; and that, pursuant to that authority, __he executed the foregoing instrument in the name of and on behalf of said limited liability company as the act and deed of said limited liability company.

_____

Notary Public

Registration No._____

State of:_____

Offerer's Affirmation of Understanding of and Agreement pursuant to New York State Finance Law §139-j (3) and §139-j (6) (b)

New York State Finance Law §139-j(6)(b) provides that:

Every Governmental Entity shall seek written affirmations from all Offerers as to the Offerer's understanding of and agreement to comply with the Governmental Entity's procedures relating to permissible contacts during a Governmental Procurement pursuant to subdivision three of this section.

Offerer affirms that it understands and agrees to comply with the procedures of the Government Entity relative to permissible contacts as required by New York State Finance Law §139-j (3) and §139-j (6) (b).			
Authorized Signature		Date	
Print Name		Title	
Company Name			
Address			
City	State	Zip	

Offerer Disclosure of Prior Non-Responsibility Determinations

Background:

New York State Finance Law §139-k(2) obligates a Governmental Entity to obtain specific information regarding prior non-responsibility determinations with respect to State Finance Law §139-j. This information must be collected in addition to the information that is separately obtained pursuant to State Finance Law §163(9). In accordance with State Finance Law §139-k, an Offerer must be asked to disclose whether there has been a finding of non-responsibility made within the previous four (4) years by any Governmental Entity due to: (a) a violation of State Finance Law §139-j or (b) the intentional provision of false or incomplete information to a Governmental Entity. The terms "Offerer" and "Governmental Entity" are defined in State Finance Law § 139-k(1). State Finance Law §139-j sets forth detailed requirements about the restrictions on Contacts during the procurement process. A violation of State Finance Law

§139-j includes, but is not limited to, an impermissible Contact during the restricted period (for example, contacting a person or entity other than the designated contact person, when such contact does not fall within one of the exemptions).

As part of its responsibility determination, State Finance Law §139-k(3) mandates consideration of whether an Offerer fails to timely disclose accurate or complete information regarding the above non-responsibility determination. In accordance with law, no Procurement Contract shall be awarded to any Offerer that fails to timely disclose accurate or complete information under this section, unless a finding is made that the award of the Procurement Contract to the Offerer is necessary to protect public property or public health safety, and that the Offerer is the only source capable of supplying the required Article of Procurement within the necessary timeframe. See State Finance Law §§139-j (10)(b) and 139-k(3).

Instructions:

A Governmental Entity must include a disclosure request regarding prior non-responsibility determinations in accordance with State Finance Law §139-k in its solicitation of proposals or bid documents or specifications or contract documents, as applicable, for procurement contracts. The attached form is to be completed and submitted by the individual or entity seeking to enter into a Procurement Contract. It shall be submitted to the Governmental Entity conducting the Governmental Procurement.

Offerer Disclosure of Prior Non-Responsibility Determinations

Name of Individual or Entity Seeking to Enter into the Procurement Contract			
Address			
City	State	Zip	
Person Submitting this Form	Title	Date	**2791** Contract Procurement Number

1.	Has any Governmental Entity made a finding of non-responsibility regarding the individual or entity seeking to enter into the Procurement Contract in the previous four years?	☐ No ☐ Yes
If yes, please answer questions 2-4 before proceeding to question 5. If no, please go to question 5.		
2.	Was the basis for the finding of non-responsibility due to a violation of State Finance Law §139-j	☐ No ☐ Yes
3.	Was the basis for the finding of non-responsibility due to the intentional provision of false or incomplete information to a Governmental Entity?	☐ No ☐ Yes
4.	If you answered yes to any of the above questions, please provide details regarding the finding of non-responsibility below.	
	Governmental Entity	Date of Finding of Non-responsibility
	Basis of Finding of Non-Responsibility (Add additional pages as necessary)	
5.	Has any Governmental Entity or other governmental agency terminated or withheld a Procurement Contract with the above-named individual or entity due to the intentional provision of false or incomplete information?	☐ No ☐ Yes
6.	If yes, please provide details below.	
	Governmental Entity	Date of Termination or Withholding of Contract
	Basis of Termination or Withholding (Add additional pages as necessary)	

Offerer certifies that all information provided to the Governmental Entity with respect to State Finance Law §139-k is complete, true and accurate.

By: _____ Date: _____
Signature

Offerer's Certification of Compliance with State Finance Law §139-k(5)

New York State Finance Law §139-k(5) requires that every Procurement Contract award subject to the provisions of State Finance Law §§139-k or 139-j shall contain a certification by the Offerer that all information provided to the Office of General Services with respect to State Finance Law §139-k is complete, true and accurate.

Offerer Certification:

I certify that all information provided to the Office of General Services with respect to State Finance Law §139-k is complete, true and accurate.

Authorized Signature	Date
Print Name	Title
Company Name	
Address	

City	State	Zip

Procurement Lobbying Termination

The Office of General Services reserves the right to terminate this contract in the event it is found that the certification filed by the Offerer in accordance with New York State Finance Law §139-k was intentionally false or intentionally incomplete. Upon such finding, the Office of General Services may exercise its termination right by providing written notification to the Offerer in accordance with the written notification terms of this contract.

NYS REQUIRED CERTIFICATIONS

Nondiscrimination In Employment In Northern Ireland
Macbride Fair Employment Principles

In accordance with Section 165 of the State Finance Law, the bidder, by submission of this bid, certifies that it or any individual or legal entity in which the bidder holds a 10% or greater ownership interest, or any individual or legal entity that holds a 10% or greater ownership interest in the bidder, either (answer yes or no to one or both of the following, as applicable):

1. have business operations in Northern Ireland ☐ No ☐ Yes , **and if yes**:
2. shall take lawful steps in good faith to conduct any business operations in Northern Ireland in accordance with the MacBride Fair Employment Principles relating to nondiscrimination in employment and freedom of workplace opportunity regarding such operations in Northern Ireland, and shall permit independent monitoring of compliance with such principles.
   ☐ No ☐ Yes

Non-Collusive Bidding Certification

In accordance with Section 139-d of the State Finance Law, by submitting its bid each bidder and each person signing on behalf of any other bidder certifies, and in the case of a joint bid, each party thereto certifies as to its own organization, under penalty of perjury, that to the best of his or her knowledge and belief:

1. The prices in this bid have been arrived at independently without collusion, consultation, communication, or agreement, for the purpose of restricting competition, as to any matter relating to such prices with any other bidder or with any competitor.
2. Unless otherwise required by law, the prices which have been quoted in this bid have not been knowingly disclosed by the bidder and will not knowingly be disclosed by the bidder prior to opening, directly or indirectly, to any other bidder or to any competitor.
3. No attempt has been made or will be made by the bidder to induce any other person, partnership or corporation to submit or not to submit a bid for the purpose of restricting competition.

In the event that the Bidder is unable to certify as stated above, the Bidder shall provide a signed statement which sets forth in detail the reasons why the Bidder is unable to furnish the certificate as required in accordance with State Finance Law § 139-d(1)(b).

Diesel Emission Reduction Act

Pursuant to N.Y. Environmental Conservation Law § 19-0323 (the “Law”) it is a requirement that heavy duty diesel vehicles in excess of 8,500 pounds use the best available retrofit technology (“BART”) and ultra-low sulfur diesel fuel (“ULSD”). The requirement of the Law applies to all vehicles owned, operated by or on behalf of, or leased by State agencies and State or regional public authorities. It also requires that such vehicles owned, operated by or on behalf of, or leased by State agencies and State or regional public authorities with more than half of its governing body appointed by the Governor utilize BART.

The Law may be applicable to vehicles used by contract vendors “on behalf of” State agencies and public authorities and require certain reports from contract vendors. All heavy duty diesel vehicles must have BART by the deadline provided in the Law. The Law also provides a list of exempted vehicles. Regulations

set forth in 6 NYCRR Parts 248 and 249 provide further guidance. The Bidder hereby certifies and warrants that all heavy duty vehicles, as defined in the Law, to be used under this contract, will comply with the specifications and provisions of the Law, and 6 NYCRR Parts 248 and 249.

Executive Order No. 177 Certification

The New York State Human Rights Law, Article 15 of the Executive Law, prohibits discrimination and harassment based on age, race, creed, color, national origin, sex, pregnancy or pregnancy-related conditions, sexual orientation, gender identity, disability, marital status, familial status, domestic violence victim status, prior arrest or conviction record, military status or predisposing genetic characteristics.

The Human Rights Law may also require reasonable accommodation for persons with disabilities and pregnancy-related conditions. A reasonable accommodation is an adjustment to a job or work environment that enables a person with a disability to perform the essential functions of a job in a reasonable manner. The Human Rights Law may also require reasonable accommodation in employment on the basis of Sabbath observance or religious practices.

Generally, the Human Rights Law applies to:

- all employers of four or more people, employment agencies, labor organizations and apprenticeship training programs in all instances of discrimination or harassment;
- employers with fewer than four employees in all cases involving sexual harassment; and,
- any employer of domestic workers in cases involving sexual harassment or harassment based on gender, race, religion or national origin.

In accordance with Executive Order No. 177, the Bidder hereby certifies that it does not have institutional policies or practices that fail to address the harassment and discrimination of individuals on the basis of their age, race, creed, color, national origin, sex, sexual orientation, gender identity, disability, marital status, military status, or other protected status under the Human Rights Law.

Executive Order No. 177 and this certification do not affect institutional policies or practices that are protected by existing law, including but not limited to the First Amendment of the United States Constitution, Article 1, Section 3 of the New York State Constitution, and Section 296(11) of the New York State Human Rights Law.

State Finance Law § 139-l Certification

By submission of this bid, each bidder and each person signing on behalf of any bidder certifies, and in the case of a joint bid each party thereto certifies as to its own organization, under penalty of perjury, that the bidder has and has implemented a written policy addressing sexual harassment prevention in the workplace and provides annual sexual harassment prevention training to all of its employees. Such policy shall, at a minimum, meet the requirements of section two hundred one-g of the labor law.

If the bidder cannot make the foregoing certification, such bidder shall so state and shall furnish with the bid a signed statement that sets forth in detail the reasons that the bidder cannot make the certification.

Small Business Certifications

State Finance Law § 163(1)(j) (Authorizes Award of Quantitative Factor Credit for Small Business Status in Evaluation for Best Value Contracts)
For purposes of New York State Finance Law § 163(1)(j), the contractor certifies that it:

☐ **IS NOT** a Small Business as defined in New York State Executive Law § 310(20).

☐ **IS** a Small Business as defined in New York State Executive Law § 310(20).

"Small Business" is defined under New York State Executive Law § 310(20) as a business that:

A. has a significant business presence in New York demonstrated through one of the following:
   1. pays taxes in New York State, or
   2. purchases New York State products or materials, or
   3. has any payroll in New York State
B. is independently owned and operated;
C. is not dominant in its field; and,
D. employs less than 300 persons.

State Finance Law § 163(6) (Authorizes Discretionary Purchases of Commodities or Services from Small Business Concerns)

For purposes of New York State Finance Law § 163(6), the contractor certifies that it:

☐ **IS NOT** a Small Business Concern or Small Business as defined in New York State Finance Law § 160(8).

☐ **IS** a Small Business Concern or Small Business as defined in New York State Finance Law § 160(8).

"Small Business Concern" or "Small Business" is defined under New York State Finance Law § 160(8) as a business that:

A. is resident in New York State;
B. is independently owned and operated;
C. is not dominant in its field; and
D. employs 100 or less persons.

By signing you certify your express authority to sign on behalf of yourself, your company, or other entity and full knowledge and acceptance of this Certifications document and that all information provided is complete, true and accurate.

Authorized Signature		Date	
Print Name		Title	
Company Name			
D/B/A – Doing Business As (if applicable)			
Address			
City	State	Zip	

Certification Under Executive Order No. 16- Prohibiting State Agencies and Authorities from Contracting with Businesses Conducting Business in Russia

Executive Order No. 16 provides that "all Affected State Entities are directed to refrain from entering into any new contract or renewing any existing contract with an entity conducting business operations in Russia." The complete text of Executive Order No. 16 can be found here.

The Executive Order remains in effect while sanctions imposed by the federal government are in effect. Accordingly, vendors who may be excluded from award because of current business operations in Russia are nevertheless encouraged to respond to solicitations to preserve their contracting opportunities in case the sanctions are lifted during a solicitation or even after award in the case of some solicitations.

As defined in Executive Order No. 16, an "entity conducting business operations in Russia" means an institution or company, wherever located, conducting any commercial activity in Russia or transacting business with the Russian Government or with commercial entities headquartered in Russia or with their principal place of business in Russia in the form of contracting, sales, purchasing, investment, or any business partnership.

Is Vendor an entity conducting business operations in Russia, as defined above? Please answer by checking one of the following boxes:

☐ 1. No, Vendor does not conduct business operations in Russia within the meaning of Executive Order No. 16.

☐ 2.a. Yes, Vendor conducts business operations in Russia within the meaning of Executive Order No. 16 but has taken steps to wind down business operations in Russia or is in the process of winding down business operations in Russia. (Please provide a detailed description of the wind down process and a schedule for completion.)

☐ 2.b. Yes, Vendor conducts business operations in Russia within the meaning of Executive Order No. 16 but only to the extent necessary to provide vital health and safety services within Russia or to comply with federal law, regulations, executive orders, or directives. (Please provide a detailed description of the services being provided orthe relevant laws, regulations, etc.)

☐ 3. Yes, Vendor conducts business operations in Russia within the meaning of Executive Order No. 16.

The undersigned certifies under penalties of perjury that they are knowledgeable about the Vendor's business and operations and that the answer provided herein is true to the best of their knowledge and belief.

Authorized Signature		Date	
Print Name		Title	
Company Name			
Address			
City	State	Zip	

NYS Department of Taxation and Finance - FORMS

CONTRACTOR CERTIFICATION (ST-220-TD 12/11)
CONTRACTOR CERTIFICATION TO COVERED AGENCY (ST-220-CA 12/11)

Department of Taxation and Finance

Contractor Certification

(Pursuant to Tax Law Section 5-a, as amended, effective April 26, 2006)

ST-220-TD

(4/15)

For information, consult Publication 223, *Questions and Answers Concerning Tax Law Section 5-a* (see *Need help?* below).

Contractor name			
Contractor's principal place of business	City	State	ZIP code
Contractor's mailing address *(if different than above)*	City	State	ZIP code

Contractor's federal employer identification number (EIN)	Contractor's sales tax ID number (if different from contractor's EIN)	Contractor's telephone number ( )
Covered agency or state agency	Contract number or description	Covered agency telephone number ( )
Covered agency address	City / State	ZIP code

Is the estimated contract value over the full term of the contract (but not including renewals) more than $100,000?

Yes ☐ No ☐ Unknown at this time ☐

General information

Tax Law section 5-a, as amended, effective April 26, 2006, requires certain contractors awarded certain state contracts valued at more than $100,000 to certify to the Tax Department that they are registered to collect New York State and local sales and compensating use taxes, if they made sales delivered by any means to locations within New York State of tangible personal property or taxable services having a cumulative value in excess of $300,000, measured over a specified period. In addition, contractors must certify to the Tax Department that each affiliate and subcontractor exceeding such sales threshold during a specified period is registered to collect New York State and local sales and compensating use taxes. Contractors must also file Form ST-220-CA, *Contractor Certification to Covered Agency,* certifying to the procuring state entity that they filed Form ST-220-TD with the Tax Department and that the information contained on Form ST-220-TD is correct and complete as of the date they file Form ST-220-CA.

All sections must be completed including all fields on the top of this page, all sections on page 2, Schedule A on page 3, if applicable, and *Individual, Corporation, Partnership, or LLC Acknowledgement* on page 4. If you do not complete these areas, the form will be returned to you for completion.

For more detailed information regarding this form and Tax Law section 5-a, see Publication 223, *Questions and Answers Concerning Tax Law Section 5-a, (as amended, effective April 26, 2006)*. See *Need help?* for more information on how to obtain this publication.

Note: Form ST-220-TD must be signed by a person authorized to make the certification on behalf of the contractor, and the acknowledgement on page 4 of this form must be completed before a notary public.

Mail completed form to:

NYS TAX DEPARTMENT
DATA ENTRY SECTION
W A HARRIMAN CAMPUS
ALBANY NY 12227-0826

Privacy notification

New York State Law requires all government agencies that maintain a system of records to provide notification of the legal authority for any request, the principal purpose(s) for which the information is to be collected, and where it will be maintained. To view this information, visit our Web site, or, if you do not have Internet access, call and request Publication 54, *Privacy Notification*. See *Need help?* for the Web address and telephone number.

Need help?

Visit our Web site at ***www.tax.ny.gov***

- get information and manage your taxes online
- check for new online services and features

Telephone assistance

Sales Tax Information Center:	(518) 485-2889
To order forms and publications:	(518) 457-5431
Text Telephone (TTY) Hotline (for persons with hearing and speech disabilities using a TTY):	(518) 485-5082

Persons with disabilities: In compliance with the Americans with Disabilities Act, we will ensure that our lobbies, offices, meeting rooms, and other facilities are accessible to persons with disabilities. If you have questions about special accommodations for persons with disabilities, call the information center.

I, _____ , hereby affirm, under penalty of perjury, that I am _____
(name) *(title)*
of the above-named contractor, and that I am authorized to make this certification on behalf of such contractor.

Complete Sections 1, 2, and 3 below. Make **only one** entry in each section.

Section 1 – Contractor registration status

☐ The contractor has made sales delivered by any means to locations within New York State of tangible personal property or taxable services having a cumulative value in excess of $300,000 during the four sales tax quarters which immediately precede the sales tax quarter in which this certification is made. The contractor is registered to collect New York State and local sales and compensating use taxes with the Commissioner of Taxation and Finance pursuant to Tax Law sections 1134 and 1253, and is listed on Schedule A of this certification.

☐ The contractor has not made sales delivered by any means to locations within New York State of tangible personal property or taxable services having a cumulative value in excess of $300,000 during the four sales tax quarters which immediately precede the sales tax quarter in which this certification is made.

Section 2 – Affiliate registration status

☐ The contractor does not have any affiliates.

☐ To the best of the contractor's knowledge, the contractor has one or more affiliates having made sales delivered by any means to locations within New York State of tangible personal property or taxable services having a cumulative value in excess of $300,000 during the four sales tax quarters which immediately precede the sales tax quarter in which this certification is made, and each affiliate exceeding the $300,000 cumulative sales threshold during such quarters is registered to collect New York State and local sales and compensating use taxes with the Commissioner of Taxation and Finance pursuant to Tax Law sections 1134 and 1253. The contractor has listed each affiliate exceeding the $300,000 cumulative sales threshold during such quarters on Schedule A of this certification.

☐ To the best of the contractor's knowledge, the contractor has one or more affiliates, and each affiliate has not made sales delivered by any means to locations within New York State of tangible personal property or taxable services having a cumulative value in excess of $300,000 during the four sales tax quarters which immediately precede the sales tax quarter in which this certification is made.

Section 3 – Subcontractor registration status

☐ The contractor does not have any subcontractors.

☐ To the best of the contractor's knowledge, the contractor has one or more subcontractors having made sales delivered by any means to locations within New York State of tangible personal property or taxable services having a cumulative value in excess of $300,000 during the four sales tax quarters which immediately precede the sales tax quarter in which this certification is made, and each subcontractor exceeding the $300,000 cumulative sales threshold during such quarters is registered to collect New York State and local sales and compensating use taxes with the Commissioner of Taxation and Finance pursuant to Tax Law sections 1134 and 1253. The contractor has listed each subcontractor exceeding the $300,000 cumulative sales threshold during such quarters on Schedule A of this certification.

☐ To the best of the contractor's knowledge, the contractor has one or more subcontractors, and each subcontractor has not made sales delivered by any means to locations within New York State of tangible personal property or taxable services having a cumulative value in excess of $300,000 during the four sales tax quarters which immediately precede the sales tax quarter in which this certification is made.

Sworn to this____ day of _____ , 20 _____

_____ _____
(sign before a notary public) *(title)*

Schedule A – Listing of each entity (contractor, affiliate, or subcontractor) exceeding $300,000 cumulative sales threshold

List the contractor, or affiliate, or subcontractor in Schedule A only if such entity exceeded the $300,000 cumulative sales threshold during the specified sales tax quarters. See directions below. For more information, see Publication 223.

A Relationship to contractor	B Name	C Address	D Federal ID number	E Sales tax ID number	F Registration in progress

Column A – Enter ***C*** in column A if the contractor; ***A*** if an affiliate of the contractor; or ***S*** if a subcontractor.

Column B – Name - If the entity is a corporation or limited liability company, enter the exact legal name as registered with the NY Department of State, if applicable. If the entity is a partnership or sole proprietor, enter the name of the partnership and each partner's given name, or the given name(s) of the owner(s), as applicable. If the entity has a different DBA (doing business as) name, enter that name as well.

Column C – Address - Enter the street address of the entity's principal place of business. Do not enter a PO box.

Column D – ID number - Enter the federal employer identification number (EIN) assigned to the entity. If the entity is an individual, enter the social security number of that person.

Column E – Sales tax ID number - Enter only if different from federal EIN in column D.

Column F – If applicable, enter an X if the entity has submitted Form DTF-17 to the Tax Department but has not received its certificate of authority as of the date of this certification.

Individual, Corporation, Partnership, or LLC Acknowledgment

STATE OF }
: SS.:
COUNTY OF }

On the ____ day of _____ in the year 20___ , before me personally appeared _____ ,

known to me to be the person who executed the foregoing instrument, who, being duly sworn by me did depose and say that

_ he resides at _____ ,

Town of _____ ,

County of _____ ,

State of _____; and further that:

*(Mark an **X** in the appropriate box and complete the accompanying statement.)*

☐ (If an individual): _he executed the foregoing instrument in his/her name and on his/her own behalf.

☐ (If a corporation): _he is the _____

of _____ , the corporation described in said instrument; that, by authority of the Board of Directors of said corporation, _he is authorized to execute the foregoing instrument on behalf of the corporation for purposes set forth therein; and that, pursuant to that authority, _he executed the foregoing instrument in the name of and on behalf of said corporation as the act and deed of said corporation.

☐ (If a partnership): _he is a _____

of _____ , the partnership described in said instrument; that, by the terms of said partnership, _he is authorized to execute the foregoing instrument on behalf of the partnership for purposes set forth therein; and that, pursuant to that authority, _he executed the foregoing instrument in the name of and on behalf of said partnership as the act and deed of said partnership.

☐ (If a limited liability company): _he is a duly authorized member of _____ LLC, the limited liability company described in said instrument; that _he is authorized to execute the foregoing instrument on behalf of the limited liability company for purposes set forth therein; and that, pursuant to that authority, _he executed the foregoing instrument in the name of and on behalf of said limited liability company as the act and deed of said limited liability company.

_____
Notary Public

Registration No. _____

New York State Department of Taxation and Finance

Contractor Certification to Covered Agency

(Pursuant to Section 5-a of the Tax Law, as amended, effective April 26, 2006)

ST-220-CA

(12/11)

For information, consult Publication 223, *Questions and Answers Concerning Tax Law Section 5-a* (see *Need Help?* on back).

Contractor name				*For covered agency use only* *Contract number or description*
Contractor's principal place of business	City	State	ZIP code	
Contractor's mailing address *(if different than above)*				*Estimated contract value over the full term of contract (but not including renewals)* $
Contractor's federal employer identification number (EIN)	Contractor's sales tax ID number (if different from contractor's EIN)			
Contractor's telephone number	Covered agency name			
Covered agency address				*Covered agency telephone number*

I, _____ , hereby affirm, under penalty of perjury, that I am _____
(name) *(title)*

of the above-named contractor, that I am authorized to make this certification on behalf of such contractor, and I further certify that:

(Mark an **X** *in only one box)*

☐ The contractor has filed Form ST-220-TD with the Department of Taxation and Finance in connection with this contract and, to the best of contractor's knowledge, the information provided on the Form ST-220-TD, is correct and complete.

☐ The contractor has previously filed Form ST-220-TD with the Tax Department in connection with _____
(insert contract number or description)

and, to the best of the contractor's knowledge, the information provided on that previously filed Form ST-220-TD, is correct and complete as of the current date, and thus the contractor is not required to file a new Form ST-220-TD at this time.

Sworn to this ____ day of _____, 20 _____

_____ _____
(sign before a notary public) *(title)*

Instructions

General information

Tax Law section 5-a was amended, effective April 26, 2006. On or after that date, in all cases where a contract is subject to Tax Law section 5-a, a contractor must file (1) Form ST-220-CA, *Contractor Certification to Covered Agency,* with a covered agency, and (2) Form ST-220-TD with the Tax Department before a contract may take effect. The circumstances when a contract is subject to section 5-a are listed in Publication 223, Q&A 3. See *Need help?* for more information on how to obtain this publication. In addition, a contractor must file a new Form ST-220-CA with a covered agency before an existing contract with such agency may be renewed.

Note: Form ST-220-CA must be signed by a person authorized to make the certification on behalf of the contractor, and the acknowledgement on page 2 of this form must be completed before a notary public.

When to complete this form

As set forth in Publication 223, a contract is subject to section 5-a, and you must make the required certification(s), if:

i. The procuring entity is a *covered agency* within the meaning of the statute (see Publication 223, Q&A 5);

ii. The contractor is a *contractor* within the meaning of the statute (see Publication 223, Q&A 6); and

iii. The contract is a *contract* within the meaning of the statute. This is the case when it (a) has a value in excess of $100,000 and (b) is a contract for *commodities* or *services*, as such terms are defined for purposes of the statute (see Publication 223, Q&A 8 and 9).

Furthermore, the procuring entity must have begun the solicitation to purchase on or after January 1, 2005, and the resulting contract must have been awarded, amended, extended, renewed, or assigned *on or after April 26, 2006* (the effective date of the section 5-a amendments).

Individual, Corporation, Partnership, or LLC Acknowledgment

STATE OF }
: SS.:
COUNTY OF }

On the ____ day of _____ in the year 20___ , before me personally appeared_____ ,

known to me to be the person who executed the foregoing instrument, who, being duly sworn by me did depose and say that

_he resides at _____ ,

Town of _____ ,

County of _____ ,

State of _____; and further that:

[Mark an ***X*** in the appropriate box and complete the accompanying statement.]

☐ (If an individual): _he executed the foregoing instrument in his/her name and on his/her own behalf.

☐ (If a corporation): _he is the_____

of_____ , the corporation described in said instrument; that, by authority of the Board of Directors of said corporation, _he is authorized to execute the foregoing instrument on behalf of the corporation for purposes set forth therein; and that, pursuant to that authority, _he executed the foregoing instrument in the name of and on behalf of said corporation as the act and deed of said corporation.

☐ (If a partnership): _he is a _____

of_____ , the partnership described in said instrument; that, by the terms of said partnership, _he is authorized to execute the foregoing instrument on behalf of the partnership for purposes set forth therein; and that, pursuant to that authority, _he executed the foregoing instrument in the name of and on behalf of said partnership as the act and deed of said partnership.

☐ (If a limited liability company): _he is a duly authorized member of _____ , LLC, the limited liability company described in said instrument; that _he is authorized to execute the foregoing instrument on behalf of the limited liability company for purposes set forth therein; and that, pursuant to that authority, _he executed the foregoing instrument in the name of and on behalf of said limited liability company as the act and deed of said limited liability company.

_____
Notary Public

Registration No.
_____

Privacy notification

The Commissioner of Taxation and Finance may collect and maintain personal information pursuant to the New York State Tax Law, including but not limited to, sections 5-a, 171, 171-a, 287, 308, 429, 475, 505, 697, 1096, 1142, and 1415 of that Law; and may require disclosure of social security numbers pursuant to 42 USC 405(c)(2)(C)(i).

This information will be used to determine and administer tax liabilities and, when authorized by law, for certain tax offset and exchange of tax information programs as well as for any other lawful purpose.

Information concerning quarterly wages paid to employees is provided to certain state agencies for purposes of fraud prevention, support enforcement, evaluation of the effectiveness of certain employment and training programs and other purposes authorized by law.

Failure to provide the required information may subject you to civil or criminal penalties, or both, under the Tax Law.

This information is maintained by the Manager of Document Management, NYS Tax Department, W A Harriman Campus, Albany NY 12227; telephone (518) 457-5181.

Need help?

Visit our Web site at ***www.tax.ny.gov***
- get information and manage your taxes online
- check for new online services and features

Telephone assistance

Sales Tax Information Center: (518) 485-2889

To order forms and publications: (518) 457-5431

Text Telephone (TTY) Hotline (for persons with hearing and speech disabilities using a TTY): (518) 485-5082

Persons with disabilities: In compliance with the Americans with Disabilities Act, we will ensure that our lobbies, offices, meeting rooms, and other facilities are accessible to persons with disabilities. If you have questions about special accommodations for persons with disabilities, call the information center.

NEW YORK STATE OF OPPORTUNITY. Office of General Services | Office of Minority and Women-Owned Businesses & Community Relations

EQUAL EMPLOYMENT OPPORTUNITY STAFFING PLAN

General instructions: Contact the Designated Contact(s) for the solicitation if you have any questions. **All Offerors** must complete an EEO Staffing Plan (EEO 100) and submit it as part of the bid or proposal package. Where the work force to be utilized in the performance of the State contract can be separated out from the contractor's total work force, the Offeror shall complete this form only for the anticipated work force to be utilized on the State contract. Where the work force to be utilized in the performance of the State contract cannot be separated out from the contractor's total work force, the Offeror shall complete this form for the contractor's total work force. Subcontractors awarded a subcontract over $25,000 for the construction, demolition, replacement, major repair, renovation, planning or design of real property and improvements thereon (the "Work") except where the Work is for the beneficial use of the Contractor must complete this form upon request of OGS.

Instructions for completing:

1. Enter the Solicitation Number that this report applies to along with the name and address of the Offeror.
2. Check off the appropriate box to indicate if the Offeror completing the report is the contractor or a subcontractor.
3. Check off the appropriate box to indicate if the work force being reported is just for the contract or the Offerors' total work force.
4. Enter the total work force by EEO job category.
5. Break down the total work force by gender and enter under the heading "Work force by Gender."
6. Break down the total work force by race/ethnic background and enter under the heading "Work force by Race/Ethnic Identification." Enter the name, title, phone number and email address for the person completing the form. Sign and date the form in the designated boxes.

RACE/ETHNIC IDENTIFICATION

Race/ethnic designations as used by the Equal Employment Opportunity Commission do not denote scientific definitions of anthropological origins. For the purposes of this report, an employee may be included in the group to which he or she appears to belong, identifies with, or is regarded in the community as belonging. However, no person should be counted in more than one race/ethnic group. The race/ethnic categories for this survey are:

WHITE - (Not of Hispanic origin) All persons having origins in any of the original peoples of Europe, North Africa, or the Middle East.

BLACK - A person, not of Hispanic origin, who has origins in any of the black racial groups of the original peoples of Africa.

HISPANIC - A person of Mexican, Puerto Rican, Cuban, Central or South American or other Spanish culture or origin, regardless of race.

ASIAN & PACIFIC ISLANDER - A person having origins in any of the original peoples of the Far East, Southeast Asia, the Indian subcontinent or the Pacific Islands.

AMERICAN INDIAN OR ALASKAN NATIVE (Not of Hispanic Origin) - A person having origins in any of the original peoples of North America, and who maintains cultural identification through tribal affiliation or community recognition.

NEW YORK STATE OF OPPORTUNITY. Office of General Services | Office of Minority and Women-Owned Businesses & Community Relations

EQUAL EMPLOYMENT OPPORTUNITY STAFFING PLAN

SUBMIT WITH BID OR PROPOSAL or within a reasonable time thereafter as requested by OGS, but prior to Contract Award.

Solicitation No.: 2791	**Reporting Entity:** ☐ Contractor ☐ Subcontractor	Report includes Contractor's ☐ Contractor's work force to be utilized on this contract ☐ Contractor's total work force ☐ Subcontractor's work force to be utilized on this contract ☐ Subcontractor's total work force
Contractor/Subcontractor's Name:		
Contractor/Subcontractor's Address: **FEIN:**		

Enter the total number of employees for each classification:

EEO Job Category	Total Work Force	Work force by Gender		Work force by Race/Ethnic Identification													
		Total Male (M)	Total Female (F)	White (M)	White (F)	Black (M)	Black (F)	Hispanic (M)	Hispanic (F)	Asian (M)	Asian (F)	American Indian or Alaskan Native (M)	American Indian or Alaskan Native (F)	Veteran (M)	Veteran (F)	(M)	(F)
Executive/Senior level Officials & Managers																	
First/Mid-level officials & Managers																	
Professionals																	
Technicians																	
Sales Workers																	
Administrative Support Workers																	
Craft Workers																	
Operatives																	
Laborers and Helpers																	
Service Workers																	
Totals																	

PREPARED BY (Signature):	**TELEPHONE NO.:** **EMAIL ADDRESS:**	**DATE:**
NAME AND TITLE OF PREPARER (Print or Type):		

Submit Completed Plan with the bid or proposal.

NEW YORK STATE OF OPPORTUNITY. | Office of General Services | Division of Service-Disabled Veterans' Business Development

NYS Office of General Services
Financial Administration – Agency Procurement Office
Corning Tower, 32nd Floor, ESP
Albany, New York 12242

SDVOB UTILIZATION PLAN

☐ **Initial Plan** ☐ **Revised plan** **Contract/Solicitation #**_____

INSTRUCTIONS: This Utilization Plan must contain a detailed description of the supplies and/or services to be provided by each NYS **Certified** Service-Disabled Veteran-Owned Business (SDVOB) under the contract. By submission of this Plan, the Bidder/Contractor commits to making good faith efforts in the utilization of SDVOB subcontractors and suppliers as required by the SDVOB goals contained in the Solicitation/Contract. Making false representations or providing information that shows a lack of good faith as part of, or in conjunction with, the submission of a Utilization Plan is prohibited by law and may result in penalties including, but not limited to, termination of a contract for cause, loss of eligibility to submit future bids, and/or withholding of payments. Firms that do not perform commercially useful functions may not be counted toward SDVOB utilization. Attach additional sheets if necessary.

BIDDER/CONTRACTOR INFORMATION		**SDVOB Goals In Contract**
Bidder/Contractor Name:	NYS Vendor ID:	%
Bidder/Contractor Address (Street, City, State and Zip Code):		
Bidder/Contractor Telephone Number:	Contract Work Location/Region:	
Contract Description/Title:		

CONTRACTOR INFORMATION			
Prepared by (Signature):	Name and Title of Preparer:	Telephone Number:	Date:
Email Address:			

If unable to meet the SDVOB goals set forth in the solicitation/contract, bidder/contractor must submit a request for waiver on the SDVOB Waiver Form.

SDVOB Subcontractor/Supplier Name:		
Please identify the person you contacted:	Federal Identification No.:	Telephone No.:
Address:	Email Address:	
Detailed description of work to be provided by subcontractor/supplier:		
Dollar Value of subcontracts/supplies/services (When $ value cannot be estimated, provide the estimated % of contract work the SDVOB will perform): $_____ or _____%		

SDVOB Subcontractor/Supplier Name:		
Please identify the person you contacted:	Federal Identification No.:	Telephone No.:
Address:	Email Address:	
Detailed Description of work to be provided by subcontractor/supplier:		
Dollar Value of subcontracts/supplies/services (When $ value cannot be estimated, provide the estimated % of contract work the SDVOB will perform): $_____ or _____%		

FOR OGS USE ONLY				
OGS Authorized Signature:		☐ **Accepted**	☐ **Accepted as Noted**	☐ **Notice of Deficiency**
NAME (Please Print):	**SDVOB %/$** ____	____	**Date Received:**	**Date Processed:**
Comments:				

NYS CERTIFIED SDVOB SUBCONTRACTOR/SUPPLIER INFORMATION: The directory of New York State Certified SDVOBs can be viewed at: https://online.ogs.ny.gov/SDVOB/search

Note: All listed Subcontractors/Suppliers will be contacted and verified by OGS.

ADDITIONAL SHEET

Bidder/Contractor Name:	**Contract/Solicitation #**_____

SDVOB Subcontractor/Supplier Name:		
Please identify the person you contacted:	Federal Identification No.:	Telephone No.:
Address:	Email Address:	
Detailed Description of work to be provided by subcontractor/supplier:		
Dollar Value of subcontracts/supplies/services (When $ value cannot be estimated, provide the estimated % of contract work the SDVOB will perform): $_____ or _____%		
SDVOB Subcontractor/Supplier Name:		
Please identify the person you contacted:	Federal Identification No.:	Telephone No.:
Address:	Email Address:	
Detailed Description of work to be provided by subcontractor/supplier:		
Dollar Value of subcontracts/supplies/services (When $ value cannot be estimated, provide the estimated % of contract work the SDVOB will perform): $_____ or _____%		
SDVOB Subcontractor/Supplier Name:		
Please identify the person you contacted:	Federal Identification No.:	Telephone No.:
Address:	Email Address:	
Detailed Description of work to be provided by subcontractor/supplier:		
Dollar Value of subcontracts/supplies/services (When $ value cannot be estimated, provide the estimated % of contract work the SDVOB will perform): $_____ or _____%		
SDVOB Subcontractor/Supplier Name:		
Please identify the person you contacted:	Federal Identification No.:	Telephone No.:
Address:	Email Address:	
Detailed Description of work to be provided by subcontractor/supplier:		
Dollar Value of subcontracts/supplies/services (When $ value cannot be estimated, provide the estimated % of contract work the SDVOB will perform)): $_____ or _____%		
SDVOB Subcontractor/Supplier Name:		
Please identify the person you contacted:	Federal Identification No.:	Telephone No.:
Address:	Email Address:	
Detailed Description of work to be provided by subcontractor/supplier:		
Dollar Value of subcontracts/supplies/services (When $ value cannot be estimated, provide the estimated % of contract work the SDVOB will perform): $_____ or _____%		

Appendix C

Sample Contract

Solicitation No. 2791

SAMPLE

STATE OF NEW YORK

OFFICE OF GENERAL SERVICES

AGREEMENT FOR

PROGRAMMABLE LOGIC CONTROLLER REPLACEMENT

IN BUILDING 22, AT THE W. AVERELL HARRIMAN

STATE OFFICE CAMPUS IN

ALBANY, NY

WITH

(CONTRACTOR)

CONTRACT #OGS01-C00XXXX-1140000

THIS AGREEMENT, made this ____ day of _____, 2023 by and between the People of the State of New York, acting by and through the Commissioner of General Services, whose office is in the Corning Tower Building, at the Governor Nelson A. Rockefeller Empire State Plaza, Albany, New York 12242 (hereinafter "Commissioner", "OGS" or "State"), and (Company Name), (hereinafter "Contractor"), with an office at _____.

W I T N E S S E T H:

WHEREAS, the OGS is responsible for the replacement of programmable logic controllers in Building 22 located at the W. Averell Harriman State Office Campus in Albany, NY (hereinafter the "State Office Building") and in fulfilling its responsibility deems it necessary to obtain programmable logic controllers therefore, and

WHEREAS, OGS has determined after having solicited bids from bidders willing to supply these services, that the Contractor submitted the bid affording the State the best price for such services and that the Contractor possesses the necessary capacity, experience and expertise for provision of programmable logic controller replacements, and that Contractor is ready, willing and able to perform such services on the terms hereinafter set forth.

NOW THEREFORE, in consideration of the mutual covenants herein contained, the parties do hereby agree as follows:

1. CONSIDERATION

OGS shall pay the Contractor for all programmable logic controller replacement fees and other fees and expenses in accordance with the amounts and rates put forth in the Contractor's bid attached hereto as Appendix "C", which Appendix C is hereby incorporated by reference and made a part hereof as fully as if set forth as length herein. This contract will be established with

SAMPLE

a not to exceed value of $_____. Services performed beyond this amount will not be compensated.

2. TERM

This Agreement shall commence upon OSC approval and will be in effect for one year unless sooner terminated as herein specified.

3. SERVICES

The Contractor agrees to perform this Agreement and to furnish the services, labor and materials required in connection therewith in accordance with all the specifications, conditions, covenants and representations contained in the Invitation for Bids No. 2791, which is annexed as Appendix "B" hereto, and the Contractor's bid, annexed as Appendix "C" hereto, except as such Appendices B and C have been revised by the terms hereof. Appendix B is hereby incorporated by reference and made a part hereof with the same force and effect as if set forth at length herein.

4. TERMINATION

This Agreement may be terminated in accordance with the termination provisions set forth in the solicitation attached hereto as Appendix B hereof.

5. RECORDS

The Contractor will maintain accurate records and accounts of services performed and monies expended under this Agreement. Such records will be maintained for six years following the close of the State fiscal year to which they pertain and will be made available to representatives of OGS or the New York State Comptroller, as may be necessary for auditing purposes, upon request.

6. TAXES

The Contractor will be responsible for all applicable Federal, State and Local taxes and all FICA contributions.

7. INDEPENDENT CONTRACTOR

It is understood and agreed that the legal status of the Contractor, its subcontractors, agents, officers and employees is that of an independent contractor and in no manner shall they be deemed employees or agents of the State of New York and, therefore, are not entitled to any of the benefits associated with such employment or designation.

8. APPENDIX A

Appendix A, Standard Clauses for New York State Contracts, attached hereto, is hereby expressly made a part of this Agreement as fully as if set forth at length herein.

9. ASSIGNMENT

Contractor agrees that it will not assign this Agreement, or any interest therein without the prior written consent of the Commissioner of General Services.

SAMPLE

10. LAW

This Agreement shall be governed by the laws of the State of New York.

11. CONDITIONS PRECEDENT

This Agreement shall not be deemed executed, valid or binding unless and until approved in writing by the Attorney General and the State Comptroller.

12. ENTIRE AGREEMENT

This Agreement constitutes the entire Agreement between the parties hereto and no statement, promise, condition, understanding, inducement or representation, oral or written, expressed or implied, which is not contained herein shall be binding or valid and this Agreement shall not be changed, modified or altered in any manner except by an instrument in writing executed by both parties hereto.

13. EXECUTORY CLAUSE

This Agreement shall be deemed executory only to the extent of money available to the State for performance of the terms hereof and no liability on account thereof shall be incurred by the State of New York beyond moneys available for purposes thereof.

14. INCONSISTENCIES

In the event of any discrepancy, disagreement or ambiguity between this contract agreement and Appendix B "Solicitation" and/or Appendix C "Bid", or between any Appendices, the documents shall be given preference in the following order to interpret and to resolve such discrepancy, disagreement or ambiguity:

1. Appendix A
2. This Contract Agreement
3. Appendix B – Solicitation #2791 including Addenda
4. Appendix C – Contractor's Bid

The parties understand and agree that any and all deviations or exceptions taken by Contractor to the State's Invitation to Bid are hereby withdrawn except only to the extent that such exceptions or deviations have been explicitly incorporated into this contract agreement.

15. FORCE MAJEURE

Neither party hereto will be liable for losses, defaults, or damages under this Agreement which result from delays in performing, or inability to perform, all or any of the obligations or responsibilities imposed upon it pursuant to the terms and conditions of this Agreement, due to or because of acts of God, the public enemy, acts of government, earthquakes, floods, strikes, civil strife, fire or any other cause beyond the reasonable control of the party that was so delayed in performing or so unable to perform provided that such party was not negligent and shall have used reasonable efforts to avoid and overcome such cause. Such party will resume full performance of such obligations and responsibilities promptly upon removal of any such cause.

SAMPLE

16. ASSIGNMENT BY STATE

The State agrees not to assign this Agreement without prior notice to and reasonable consent of the Contractor provided, however, that this Agreement may be assigned without such consent to another agency or subdivision of the State pursuant to a governmental reorganization or assignment of functions under which the pertinent functions of OGS as an agency are transferred to a successor agency or subdivision of the State.

17. NOTICES

All notices, demands, designations, certificates, requests, offers, consents, approvals and other instruments given pursuant to this Agreement shall be in writing and shall be validly given when mailed by registered or certified mail, overnight carrier or hand delivered, (i) if to the State, addressed to the State at its address set forth above, and (ii) if to Contractor, addressed to Contractor at its address set forth above. The parties may from time to time, specify any address in the United States as its address for purpose of notices under this Agreement by giving fifteen (15) days written notice to the other party. The parties agree to mutually designate individuals as their respective representatives for the purposes of this Agreement.

18. CAPTIONS

The captions contained in this Agreement are intended for convenience and reference purposes only and shall in no way be deemed to define or limit any provision thereof.

19. SEVERABILITY

In the event that any one or more of the provisions of this Agreement shall for any reason be declared unenforceable under the laws or regulations in force, such provision will not have any effect on the validity of the remainder of this Agreement, which shall then be construed as if such unenforceable provision had never been written or was never contained in this Agreement.

20. INFORMATION SECURITY BREACH

In accordance with the Information and Security Breach Notification Act (ISBNA) (Chapter 442 of the Laws of 2005, as amended by Chapter 491 of the Laws of 2005), a Contractor with OGS shall be responsible for all applicable provisions of the ISBNA and the following terms herein with respect to any private information (as defined in the ISBNA) received by or on behalf of OGS under this Agreement.

1. Contractor shall supply OGS with a copy of its notification policy, which shall be modified to be in compliance with this provision, as well as OGS's notification policy.
2. Contractor must encrypt any database fields and backup tapes that contain private data elements, as set forth in the ISBNA.
3. Contractor must ensure that private data elements are encrypted in transit to / from their systems.
4. In general, contractor must ensure that private data elements are not displayed to users on computer screens or in printed reports; however, specific users who are authorized to

SAMPLE

view the private data elements and who have been properly authenticated may view/receive such data.

5. Contractor must monitor for breaches of security to any of its systems that store or process private data owned by OGS.
6. Contractor shall take all steps as set forth in ISBNA to ensure private information shall not be released without authorization from OGS.
7. In the event a security breach occurs as defined by ISBNA Contractor shall immediately notify OGS and commence an investigation in cooperation with OGS to determine the scope of the breach.
8. Contractor shall also take immediate and necessary steps needed to restore the information security system to prevent further breaches.
9. Contractor shall immediately notify OGS following the discovery that OGS's system security has been breached.
10. Unless the Contractor is otherwise instructed, Contractor is to first seek consultation and receive authorization from OGS prior to notifying the individuals whose personal identity information was compromised by the breach of security, the New York State Chief Information Security Office, the Department of State Division of Consumer Protection, the Attorney General's Office or any consuming reporting agencies of a breach of the information security system or concerning any determination to delay notification for law enforcement investigations.
11. Contractor shall be responsible for providing all notices required by the ISBNA and for all costs associated with providing said notices.
12. This policy and procedure shall not impair the ability of the Attorney General to bring an action against the Contractor to enforce all provisions of the ISBNA or limit the Contractor's liability for any violations of the ISBNA.

21. CONTRACTOR RESPONSIBILITY

The Contractor shall at all times during the Contract term remain responsible. The Contractor agrees, if requested by the Commissioner of OGS or her designee, to present evidence of its continuing legal authority to do business in New York State, integrity, experience, ability, prior performance, and organizational and financial capacity.

The Commissioner of OGS or her designee, in his or her sole discretion, reserves the right to suspend any or all activities under this Contract, at any time, when he or she discovers information that calls into question the responsibility of the Contractor. In the event of such suspension, the Contractor will be given written notice outlining the particulars of such suspension. Upon issuance of such notice, the Contractor must comply with the terms of the suspension order. Contract activity may resume at such time as the Commissioner of OGS or her designee issues a written notice authorizing a resumption of performance under the Contract.

Upon written notice to the Contractor, and a reasonable opportunity to be heard with appropriate OGS officials or staff, the Contract may be terminated by the Commissioner of OGS or her

SAMPLE

designee at the Contractor's expense where the Contractor is determined by the Commissioner of OGS or her designee to be non-responsible. In such event, the Commissioner of OGS or her designee may complete the contractual requirements in any manner he or she may deem advisable and pursue available legal or equitable remedies for breach.

In no case shall such termination of the Contract by the State be deemed a breach thereof, nor shall the State be liable for any damages for lost profits or otherwise, which may be sustained by the Contractor as a result of such termination.

SAMPLE

CONTRACT NO. OGS01-C00XXXX-1140000

IN WITNESS WHEREOF, the parties hereto have executed this Agreement as of the day and year first above written.

Agency Certification
"In addition to the acceptance of this Contract, I also certify that original copies of this signature page will be attached to all other exact copies of this contract."

(**Company Name**)

THE PEOPLE OF THE STATE OF NEW YORK

By:_____
Name:
Title:
Federal I.D. No.:
Date:

By:_____
Name:
Title:
Date:

APPROVED AS TO FORM

APPROVED

Attorney General

State Comptroller

STATE OF)
) ss.:
COUNTY OF _____)

On the _____ day of _____ in the year 20__, before me, the undersigned, personally appeared _____ personally known to me or proved to me on the basis of satisfactory evidence to be the individual(s) whose name(s) is (are) subscribed to the within instrument and acknowledged to me that he/she/they executed the same in his/her/their capacity(ies), and that by his/her/their signature(s) on the instrument, the individual(s), or the person upon behalf of which the individual(s) acted, executed the instrument.

_____

Notary Public

SAMPLE

Sample Contract

Appendix A

STANDARD CLAUSES FOR NEW YORK STATE CONTRACTS

[Text not included at this time because it is included elsewhere in the solicitation. Will be added when contract is finalized]

SAMPLE

Sample Contract
Appendix B

Invitation for Bid

SAMPLE

Sample Contract
Appendix C

Contractor's Bid

SAMPLE

Appendix D – Insurance Requirements

Insurance Requirements

The Bidder shall be required to procure, at its sole cost and expense, all insurance required by this Attachment.

The Bidder shall be required to provide proof of compliance with the requirements of this Attachment, as follows:

- Proof of all insurance required by Section B below shall be provided in accordance with the provisions hereof;
- After award, the Contractor shall be required to provide proof of all insurance after renewal or upon request according to the timelines set forth in Section A.13 below.

Contractors shall be required to procure, at their sole cost and expense, and shall maintain in force at all times during the term of any Contract resulting from this Solicitation, policies of insurance as required by this Attachment. All insurance required by this Attachment shall be written by companies that have an A.M. Best Company rating of "A-," Class "VII" or better. In addition, companies writing insurance intended to comply with the requirements of this Attachment should be licensed or authorized by the New York State Department of Financial Services to issue insurance in the State of New York. OGS may, in its sole discretion, accept policies of insurance written by a non-authorized carrier or carriers when certificates and/or other policy documents are accompanied by a completed Excess Lines Association of New York (ELANY) affidavit or other documents demonstrating the company's strong financial rating. If, during the term of a policy, the carrier's A.M. Best rating falls below "A-," Class "VII," the insurance must be replaced, on or before the renewal date of the policy, with insurance that meets the requirements above.

Bidders and Contractors shall deliver to OGS evidence of the insurance required by this Solicitation and any Contract resulting from this Solicitation in a form satisfactory to OGS. Policies must be written in accordance with the requirements of the paragraphs below, as applicable. While acceptance of insurance documentation shall not be unreasonably withheld, conditioned or delayed, acceptance and/or approval by OGS does not, and shall not be construed to, relieve Bidders or Contractors of any obligations, responsibilities or liabilities under this Solicitation or any Contract resulting from this Solicitation.

The Contractor shall not take any action, or omit to take any action that would suspend or invalidate any of the required coverages during the term of the Contract.

A. General Conditions Applicable to Insurance. All policies of insurance required by this Solicitation or any Contract resulting from this Solicitation shall comply with the following requirements:

1. Coverage Types and Policy Limits. The types of coverage and policy limits required from Bidders and Contractors are specified in Paragraph B *Insurance Requirements* below.

2. Policy Forms. Except as otherwise specifically provided herein, or agreed to in the Contract resulting from this Solicitation, all policies of insurance required by this Attachment shall be written on an occurrence basis. In the event that occurrence-based coverage is not commercially available, claims-made policy forms will be considered provided that, at minimum, it includes provisions that allow for (a) reporting circumstances or incidents that may give rise to future claims and (b) an extended reporting period of not less than three (3) years with respect to events that occurred but were not reported during the term of the policy.

3. Certificates of Insurance/Notices. Bidders and Contractors shall provide OGS with a Certificate or Certificates of Insurance, in a form satisfactory to OGS as detailed below, and pursuant to the timelines set forth in Section A.13. below. Certificates shall name **The New York State Office of General Services, Agency Procurement Office, 32nd Floor, Corning Tower, Empire State Plaza, Albany, New York 12242** as the certificate holder.

Certificates of Insurance shall:

- Be in the form acceptable to OGS and in accordance with the New York State Insurance Law (e.g., an ACORD 25 certificate)
- Disclose any deductible, self-insured retention, aggregate limit or exclusion to the policy that materially changes the coverage required by this Solicitation or any Contract resulting from this Solicitation;
- Be signed by an authorized representative of the referenced insurance carriers; and
- Contain the following language in the Description of Operations / Locations / Vehicles section of the Certificate or on a submitted endorsement: **Additional insured protection afforded is on a primary and non-contributory basis. A waiver of subrogation is granted in favor of the additional insureds.**

Only original documents (certificates of insurance and any endorsements and other attachments) or electronic versions of the same that can be directly traced back to the insurer, agent or broker via e-mail distribution or similar means will be accepted.

OGS requires Contractors to submit only certificates of insurance and additional insured endorsements. Contractors should refrain from submitting entire insurance policies. If an entire insurance policy is submitted but not requested, OGS shall not be obligated to review and shall not be chargeable with knowledge of its contents. In addition, submission of an entire insurance policy not requested by OGS does not constitute proof of compliance with the insurance requirements and does not discharge Contractors from submitting the requested insurance documentation. OGS reserves the right to request other proof of insurance, including, but not limited to, policies, and Contractors agree to comply with all reasonable requests.

4. Primary Coverage. All Commercial General Liability, Business Automobile Liability, and Excess Umbrella Liability insurance policies shall provide that the required coverage shall be primary and non-contributory to other insurance available to the People of the State of New York, the New York State Office of General Services, and their officers, agents, and employees. Any other insurance maintained by the People of the State of New York, the New

York State Office of General Services, and their officers, agents, and employees shall be excess of and shall not contribute with the Bidder/Contractor's insurance.

5. Breach for Lack of Proof of Coverage. The failure to comply with the requirements of this Attachment at any time during the term of the Contract shall be considered a breach of the terms of the Contract and shall allow the People of the State of New York, the New York State Office of General Services, and their officers, agents, and employees to avail themselves of all remedies available under the Contract or at law or in equity.

6. Self-Insured Retention/Deductibles. Certificates of Insurance must indicate the applicable deductibles/self-insured retentions for each listed policy. Deductibles or self-insured retentions above $100,000.00 are subject to approval from OGS. Such approval shall not be unreasonably withheld, conditioned or delayed. Bidders and Contractors shall be solely responsible for all claim expenses and loss payments within the deductibles or self-insured retentions. If the Bidder/Contractor is providing the required insurance through self-insurance, evidence of the financial capacity to support the self-insurance program along with a description of that program, including, but not limited to, information regarding the use of a third-party administrator shall be provided upon request.

7. Subcontractors. Prior to the commencement of any work by a Subcontractor, the Contractor shall require such Subcontractor to procure policies of insurance as required by this Attachment and maintain the same in force during the term of any work performed by that Subcontractor. An Additional Insured Endorsement CG 20 38 12 19 (or the equivalent) evidencing such coverage shall be provided to the Contractor prior to the commencement of any work by a subcontractor and pursuant to the timelines set forth in Section A.13. below, as applicable. For subcontractors that are self-insured, the subcontractor shall be obligated to defend and indemnify the above-named additional insureds with respect to Commercial General Liability and Business Automobile Liability, in the same manner that the subcontractor would have been required to pursuant to this section had the subcontractor obtained such insurance policies.

8. Waiver of Subrogation. For all Commercial General Liability, Business Automobile Liability, Excess/Umbrella Liability policies and the workers' compensation insurance required below, the Bidder/Contractor shall cause to be included in its policies insuring against loss, damage or destruction by fire or other insured casualty a waiver of the insurer's right of subrogation against The People of the State of New York, the New York State Office of General Services, and their officers, agents, and employees, or, if such waiver is unobtainable (i) an express agreement that such policy shall not be invalidated if the Contractor waives or has waived before the casualty, the right of recovery against The People of the State of New York, the New York State Office of General Services, and their officers, agents, and employees or (ii) any other form of permission for the release of The People of the State of New York, the New York State Office of General Services, and their officers, agents, and employees. A Waiver of Subrogation Endorsement shall be provided upon request. A blanket Waiver of Subrogation Endorsement evidencing such coverage is also acceptable.

9. Additional Insured. The Contractor shall cause to be included in each of the Commercial General Liability, Business Automobile Liability, and Excess/Umbrella Liability policies required below for on-going and completed operations naming as additional insured

(via ISO form CG 20 10 12 19 and CG 20 37 12 19 and form CA 20 48 10 13, or a form or forms that provide equivalent coverage): The People of the State of New York, the New York State Office of General Services, and their officers, agents, and employees. An Additional Insured Endorsement, or the equivalent, evidencing such coverage shall be provided to OGS pursuant to the timelines set forth in Section A.13. below. A blanket Additional Insured Endorsement evidencing such coverage is also acceptable. For Contractors who are self-insured, the Contractor shall be obligated to defend and indemnify the above-named additional insureds with respect to Commercial General Liability and Business Automobile Liability, in the same manner that the Contractor would have been required to pursuant to this Attachment had the Contractor obtained such insurance policies.

10. Excess/Umbrella Liability Policies. Required insurance coverage limits may be provided through a combination of primary and excess/umbrella liability policies. If coverage limits are provided through excess/umbrella liability policies, then a Schedule of underlying insurance listing policy information for all underlying insurance policies (insurer, policy number, policy term, coverage and limits of insurance), including proof that the excess/umbrella insurance follows form must be provided upon request.

11. Notice of Cancellation or Non-Renewal. Policies shall be written so as to include the requirements for notice of cancellation or non-renewal in accordance with the New York State Insurance Law. Within five (5) business days of receipt of any notice of cancellation or non-renewal of insurance, the Contractor shall provide OGS with a copy of any such notice received from an insurer together with proof of replacement coverage that complies with the insurance requirements of this Solicitation and any Contract resulting from this Solicitation.

12. Policy Renewal/Expiration Upon policy renewal/expiration, evidence of renewal or replacement of coverage that complies with the insurance requirements set forth in this Solicitation and any Contract resulting from this Solicitation shall be delivered to OGS. If, at any time during the term of any Contract resulting from this Solicitation, the coverage provisions and limits of the policies required herein do not meet the provisions and limits set forth in this Solicitation or any Contract resulting from this Solicitation, or proof thereof is not provided to OGS, the Contractor shall immediately cease work. The Contractor shall not resume work until authorized to do so by OGS.

13. Deadlines for Providing Insurance Documents after Renewal or Upon Request. As set forth herein, certain insurance documents must be provided to the OGS Agency Procurement Office contact identified in the Contract Award Notice after renewal or upon request. This requirement means that the Contractor shall provide the applicable insurance document to OGS as soon as possible but in no event later than the following time periods:

- For certificates of insurance: 5 business days;
- For information on self-insurance or self-retention programs: 15 calendar days;
- For other requested documentation evidencing coverage: 15 calendar days;
- For additional insured and waiver of subrogation endorsements: 30 calendar days; and
- For notice of cancellation or non-renewal and proof of replacement coverage that complies with the requirements of this section: 5 business days from request or renewal.

Notwithstanding the foregoing, if the Contractor shall have promptly requested the insurance documents from its broker or insurer and shall have thereafter diligently taken all steps necessary to obtain such documents from its insurer and submit them to OGS, OGS shall extend the time period for a reasonable period under the circumstances, but in no event shall the extension exceed 30 calendar days.

B. Insurance Requirements

Bidders and Contractors shall obtain and maintain in full force and effect, throughout the term of any Contract resulting from this Solicitation, at their own expense, the following insurance with limits not less than those described below and as required by the terms of any Contract resulting from this Solicitation, or as required by law, whichever is greater:

Insurance Type		Proof of Coverage is Due
Commercial General Liability	No less than $1,000,000 each occurrence	Upon notification of tentative award and updated in accordance with Contract
General Aggregate	$2,000,000	
Products-Completed Operations Aggregate	$2,000,000	
Personal and Advertising Injury	$1,000,000	
Medical Expenses Limit	$5,000	
Crime	$50,000	
Professional Liability	$2,000,000	
Business Automobile Liability Insurance	No less than $1,000,000 each accident	
Workers' Compensation		
Disability Benefits		

1. Commercial General Liability Insurance: Such liability shall be written on the current edition of ISO occurrence form CG 00 01, or a substitute form providing equivalent coverage.

Policy shall include bodily injury, property damage and broad form contractual liability coverage.

- General Aggregate
- Products – Completed Operations Aggregate
- Personal and Advertising Injury
- Each Occurrence

Coverage shall include, but not be limited to, the following:

- Premises liability arising from operations;
- Independent contractors;
- Blanket contractual liability, including tort liability of another assumed in a contract;
- Defense and/or indemnification obligations, including obligations assumed under the Contract;
- Cross liability for additional insureds; and
- Products/completed operations for a term of no less than one (1) year, commencing upon acceptance of the work, as required by the Contract.

2. Crime Insurance: If, during the term of any Contract resulting from this Solicitation, the Contractor plans to enter the premises of an Authorized User to fulfill its obligations under this Solicitation or any Contract resulting from this Solicitation, the Contractor is required to fulfill the Crime Insurance requirements herein and shall be required to provide proof of compliance with the requirements. If, during the term of any Contract resulting from this Solicitation, the Contractor plans to enter the premises of an Authorized User to fulfill its obligations under this Solicitation or any Contract resulting from this Solicitation, the Contractor shall maintain, during the term of the Contract, Crime Insurance on a "loss sustained form" or "loss discovered form," and coverage must include the following:

- The policy must allow for reporting of circumstances or incidents that might give rise to future claims.
- The policy must include an extended reporting period of no less than one (1) year with respect to events which occurred but were not reported during the term of the policy.
- Any warranties required by the Contractor's insurer as a result of any Contract resulting from this Solicitation must be disclosed and complied with. Said insurance shall extend coverage to include the principals (all directors, officers, agents and employees) of the Contractor as a result of any Contract resulting from this Solicitation.
- The policy shall include coverage for third-party fidelity and name "The People of the State of New York, the New York State Office of General Services, any entity authorized by law or regulation to use any Contract resulting from this Solicitation as an Authorized User and their officers, agents, and employees" as "Loss Payees" for all third-party coverage secured. This requirement applies to both primary and excess liability policies, as applicable.
- The policy shall not contain a condition requiring an arrest and conviction.
- The policy shall include coverage for, but is not limited to, employee theft, forgery or alteration, inside the premises-theft of money and securities, inside the premises-robbery or safe burglary of other property, outside the premises computer crime/fraud, and money orders and counterfeit paper currency

If coverage is provided as underlying coverage of another policy, all requirements must be met within the primary policy.

3. Professional Liability:

Such insurance shall apply to professional errors, acts, or omissions arising out of the scope of services (i.e. professional services, testing for asbestos and lead, providing staff training of new system and equipment).

- Such insurance shall apply to professional errors, acts, or omissions arising out of the scope of services.
- If coverage is written on a claims-made policy, the Contractor warrants that any applicable retroactive date precedes the start of work; and that continuous coverage will be maintained, or an extended discovery period exercised, throughout the performance of the services and for a period of not less than one (1) year from the time work under any Contract resulting from this Solicitation is completed or must agree to insure for one year following any Contract under award. Written proof of this extended reporting period or agreement must be provided to OGS upon request.
- The policy shall cover professional misconduct or lack of ordinary skill for those positions defined in the Scope of Services of any Contract resulting from this Solicitation.

4. Business Automobile Liability Insurance: Such insurance shall cover liability arising out of automobiles used in connection with performance under the Contract, including owned, leased, hired and non-owned automobiles bearing or, under the circumstances under which they are being used, required by the Motor Vehicles Laws of the State of New York to bear, license plates.

In the event that the Contractor does not own, lease or hire any automobiles used in connection with performance under the Contract, the Contractor does not need to obtain Business Automobile Liability Insurance, but must attest to the fact that the Contractor does not own, lease or hire any automobiles used in connection with performance under the Contract on a form provided by OGS. If, however, during the term of the Contract, the Contractor acquires, leases or hires any automobiles that will be used in connection with performance under the Contract, the Contractor must obtain Business Automobile Liability Insurance that meets all of the requirements of this section and provide proof of such coverage to OGS in accordance with the insurance requirements of any Contract resulting from this Solicitation.

5. Workers' Compensation Insurance and Disability Benefits Requirements
Sections 57 and 220 of the New York State Workers' Compensation Law require the heads of all municipal and state entities to ensure that businesses applying for contracts have appropriate workers' compensation and disability benefits insurance coverage. These requirements apply to both original contracts and renewals. **Failure to provide proper proof of such coverage or a legal exemption will result in a rejection of a Bid or any contract renewal. A Bidder will not be awarded a Contract unless proof of workers' compensation and disability insurance is provided to OGS.** Proof of workers' compensation and disability benefits coverage, or proof of exemption must be submitted to OGS at the time of notification of tentative award, policy renewal, contract renewal and upon request. Proof of compliance must be submitted on one of the following forms designated by the New York State Workers' Compensation Board. **An ACORD form is not acceptable proof of New York State workers' compensation or disability benefits insurance coverage.**

Proof of Compliance with Workers' Compensation Coverage Requirements:

- Form CE-200*, Certificate of Attestation for New York Entities With No Employees and Certain Out of State Entities, That New York State Workers' Compensation and/or Disability Benefits Insurance Coverage is Not Required*, which is available on the Workers' Compensation Board's website (www.businessexpress.ny.gov);
- Form C-105.2 (9/15), *Certificate of Workers' Compensation Insurance*, sent to OGS by the Contractor's insurance carrier upon request, or if coverage is provided by the New York State Insurance Fund, they will provide Form U-26.3 to OGS upon request from the Contractor; or
- Form SI-12, *Certificate of Workers' Compensation Self-Insurance*, available from the New York State Workers' Compensation Board's Self-Insurance Office, or
- Form GSI-105.2, *Certificate of Participation in Workers' Compensation Group Self-Insurance*, available from the Contractor's Group Self-Insurance Administrator.

Proof of Compliance with Disability Benefits Coverage Requirements:

- Form CE-200, *Certificate of Attestation for New York Entities With No Employees and Certain Out of State Entities, That New York State Workers' Compensation and/or Disability Benefits Insurance Coverage is Not Required*, which is available on the Workers' Compensation Board's website (www.businessexpress.ny.gov);
- Form DB-120.1, Certificate of Disability Benefits Insurance, sent to OGS by the Contractor's insurance carrier upon request; or
- Form DB-155, Certificate of Disability Benefits Self-Insurance, available from the New York State Workers' Compensation Board's Self-Insurance Office.

Information clarifying the New York State Workers' Compensation Law requirements is available at the New York State Workers' Compensation Board's website, http://www.wcb.ny.gov/content/main/Employers/requirements-businesses-applying-government-permits-licenses-contracts.pdf .

Contractor acknowledges that failure to obtain and/or keep in effect any or all required insurance on behalf of OGS constitutes a material breach of contract and subjects it to liability for damages, indemnification and all other legal remedies available to OGS. Contractor's failure to obtain and/or keep in effect any or all required insurance shall also provide the basis for OGS' immediate termination of any contract resulting from this Solicitation, subject only to a five (5) business day cure period. Any termination by OGS under this section shall in no event constitute or be deemed a breach of any contract resulting from this Solicitation and no liability shall be incurred by or arise against the Office of General Services, its agents and employees therefore for lost profits or any other damages.

Appendix E – M/WBE and EEO Requirements

CONTRACTOR REQUIREMENTS AND PROCEDURES FOR PARTICIPATION BY NEW YORK STATE CERTIFIED MINORITY- AND WOMEN-OWNED BUSINESS ENTERPRISES AND EQUAL EMPLOYMENT OPPORTUNITIES FOR MINORITY GROUP MEMBERS AND WOMEN

I. New York State Law

Pursuant to New York State Executive Law Article 15-A and Parts 140-145 of Title 5 of the New York Codes, Rules and Regulations ("NYCRR"), the New York State Office of General Services ("OGS") is required to promote opportunities for the maximum feasible participation of New York State-certified Minority- and Women-Owned Business Enterprises ("MWBEs") and the employment of minority group members and women in the performance of OGS contracts.

II. General Provisions

A. OGS is required to implement the provisions of New York State Executive Law Article 15-A and 5 NYCRR Parts 140-145 ("MWBE Regulations") for all State contracts as defined therein, with a value (1) in excess of $25,000 for labor, services, equipment, materials, or any combination of the foregoing or (2) in excess of $100,000 for real property renovations and construction.

B. The Contractor agrees, in addition to any other nondiscrimination provision of the Contract and at no additional cost to OGS, to fully comply and cooperate with OGS in the implementation of New York State Executive Law Article 15-A and the regulations promulgated thereunder. These requirements include equal employment opportunities for minority group members and women ("EEO") and contracting opportunities for MWBEs. Contractor's demonstration of "good faith efforts" pursuant to 5 NYCRR § 142.8 shall be a part of these requirements. These provisions shall be deemed supplementary to, and not in lieu of, the nondiscrimination provisions required by New York State Executive Law Article 15 (the "Human Rights Law") or other applicable federal, State, or local laws.

C. Failure to comply with all of the requirements herein may result in a finding of non-responsiveness, a finding of non-responsibility, breach of contract, withholding of funds, suspension or termination of the Contract, and/or such other actions or enforcement proceedings as allowed by the Contract and applicable law.

III. Equal Employment Opportunity (EEO)

A. The provisions of Article 15-A of the Executive Law and the rules and regulations promulgated thereunder pertaining to equal employment opportunities for minority group members and women shall apply to all Contractors, and any subcontractors, awarded a subcontract over $25,000 for labor, services, including legal, financial and other professional services, travel, supplies, equipment, materials, or any combination of the foregoing, to be performed for, or rendered or furnished to, the contracting State agency (the "Work") except where the Work is for the beneficial use of the Contractor.

1. Contractor and subcontractors shall undertake or continue existing EEO programs to ensure that minority group members and women are afforded equal employment opportunities without discrimination because of race, creed, color, national origin, sex, age, disability, or marital status. For these purposes, EEO shall apply in the areas of recruitment, employment, job assignment, promotion, upgrading, demotion, transfer, layoff or termination, and rates of pay or other forms of compensation. This requirement does not apply to: (i) the performance of work or the provision of

services or any other activity that is unrelated, separate, or distinct from the Contract; or (ii) employment outside New York State.

2. By entering into this Contract, Contractor certifies that the text set forth in clause 12 of Appendix A, attached hereto and made a part hereof, is Contractor's equal employment opportunity policy. In addition, Contractor agrees to comply with the Non-Discrimination Requirements set forth in clause 5 of Appendix A.

B. Form EEO 100 – Staffing Plan

To ensure compliance with this section, the Contractor agrees to submit, or has submitted with the Bid, a staffing plan on Form EEO 100 to OGS to document the composition of the proposed workforce to be utilized in the performance of the Contract by the specified categories listed, including ethnic background, gender, and federal occupational categories.

C. Form EEO - 101 - Workforce Utilization Reporting Form (Commodities and Services) ("Form EEO-101-Commodities and Services")

1. The Contractor shall submit, and shall require each of its subcontractors to submit, a Form EEO-101-Commodities and Services to OGS to report the actual workforce utilized in the performance of the Contract by the specified categories listed including ethnic background, gender, and Federal occupational categories. The Form EEO-101-Commodities and Services must be submitted electronically to OGS at EEO_CentCon@ogs.ny.gov on a quarterly basis during the term of the Contract by the 10th day of April, July, October, and January.

2. Separate forms shall be completed by Contractor and all subcontractors.

3. In limited instances, the Contractor or subcontractor may not be able to separate out the workforce utilized in the performance of the Contract from its total workforce. When a separation can be made, the Contractor or subcontractor shall submit the Form EEO-101-Commodities and Services and indicate that the information provided relates to the actual workforce utilized on the Contract. When the workforce to be utilized on the Contract cannot be separated out from the Contractor's or subcontractor's total workforce, the Contractor or subcontractor shall submit the Form EEO-101-Commodities and Services and indicate that the information provided is the Contractor's or subcontractor's total workforce during the subject time frame, not limited to work specifically performed under the Contract.

D. Contractor shall comply with the provisions of the Human Rights Law and all other State and federal statutory and constitutional non-discrimination provisions. Contractor and subcontractors shall not discriminate against any employee or applicant for employment because of race, creed (religion), color, sex, national origin, sexual orientation, military status, age, disability, predisposing genetic characteristic, marital status, or domestic violence victim status, and shall also follow the requirements of the Human Rights Law with regard to non-discrimination on the basis of prior criminal and conviction and prior arrest.

IV. Contract Goals

A. For purposes of this procurement, OGS conducted a comprehensive search and determined that the Contract does not offer sufficient opportunities to set goals for participation by MWBEs as subcontractors, service providers, or suppliers to Contractor. Contractor is, however, encouraged to make every good faith effort to promote and assist the participation of MWBEs on this Contract for the provision of services and materials. The directory of New York State Certified MWBEs can be viewed

at: https://ny.newnycontracts.com/FrontEnd/SearchCertifiedDirectory.asp?XID=1559&TN=ny Additionally, following Contract execution, Contractor is encouraged to contact the Division of Minority and Women's Business Development ((518) 292-5250; (212) 803-2414; or (716) 846-8200) to discuss additional methods of maximizing participation by MWBEs on the Contract.

B. Good Faith Efforts

Pursuant to 5 NYCRR § 142.8, evidence of good faith efforts shall include, but not be limited to, the following:

1. A list of the general circulation, trade, and MWBE-oriented publications and dates of publications in which the Contractor solicited the participation of certified MWBEs as subcontractors/suppliers, copies of such solicitations, and any responses thereto.

2. A list of the certified MWBEs appearing in the Empire State Development ("ESD") MWBE directory that were solicited for this Contract. Provide proof of dates or copies of the solicitations and copies of the responses made by the certified MWBEs. Describe specific reasons that responding certified MWBEs were not selected.

3. Descriptions of the Contract documents/plans/specifications made available to certified MWBEs by the Contractor when soliciting their participation and steps taken to structure the scope of work for the purpose of subcontracting with, or obtaining supplies from, certified MWBEs.

4. A description of the negotiations between the Contractor and certified MWBEs for the purposes of complying with the MWBE goals of this Contract.

5. Dates of any pre-bid, pre-award, or other meetings attended by Contractor, if any, scheduled by OGS with certified MWBEs whom OGS determined were capable of fulfilling the MWBE goals set in the Contract.

6. Other information deemed relevant to the request.

V. Fraud

Any suspicion of fraud, waste, or abuse involving the contracting or certification of MWBEs shall be immediately reported to ESD's Division of Minority and Women's Business Development at (855) 373-4692.

ALL FORMS ARE AVAILABLE AT: https://ogs.ny.gov/mwbe/forms

Appendix F – SDVOB Requirements

PARTICIPATION OPPORTUNITIES FOR NEW YORK STATE CERTIFIED SERVICE-DISABLED VETERAN OWNED BUSINESSES

Article 17-B of the New York State Executive Law provides for more meaningful participation in public procurement by certified Service-Disabled Veteran-Owned Businesses ("SDVOB"), thereby further integrating such businesses into New York State's economy. OGS recognizes the need to promote the employment of service-disabled veterans and to ensure that certified service-disabled veteran-owned businesses have opportunities for maximum feasible participation in the performance of OGS contracts.

In recognition of the service and sacrifices made by service-disabled veterans and in recognition of their economic activity in doing business in New York State, Bidders are expected to consider SDVOBs in the fulfillment of the requirements of the Contract. Such participation may be as subcontractors or suppliers, as protégés, or in other partnering or supporting roles.

I. Contract Goals

A. OGS hereby establishes an overall goal of 6% for SDVOB participation, based on the current availability of qualified SDVOBs. For purposes of providing meaningful participation by SDVOBs, the Bidder/Contractor should reference the directory of New York State Certified SDVOBs found at: https://ogs.ny.gov/veterans/. Questions regarding compliance with SDVOB participation goals should be directed to the OGS Designated Contacts. Additionally, following Contract execution, Contractor is encouraged to contact the Office of General Services' Division of Service-Disabled Veterans' Business Development at 518-474-2015 or VeteransDevelopment@ogs.ny.gov to discuss additional methods of maximizing participation by SDVOBs on the Contract.

B. Contractor must document "good faith efforts" to provide meaningful participation by SDVOBs as subcontractors or suppliers in the performance of the Contract (see clause IV below).

II. SDVOB Utilization Plan

A. In accordance with 9 NYCRR § 252.2(i), Bidders are required to submit a completed SDVOB Utilization Plan on Form SDVOB 100 with their bid.

B. The Utilization Plan shall list the SDVOBs that the Bidder intends to use to perform the Contract, a description of the work that the Bidder intends the SDVOB to perform to meet the goals on the Contract, the estimated dollar amounts to be paid to an SDVOB, or, if not known, an estimate of the percentage of Contract work the SDVOB will perform. By signing the Utilization Plan, the Bidder acknowledges that making false representations or providing information that shows a lack of good faith as part of, or in conjunction with, the submission of a Utilization Plan is prohibited by law and may result in penalties including, but not limited to, termination of a contract for cause, loss of eligibility to submit future bids, and/or withholding of payments. Any modifications or changes to the agreed participation by SDVOBs after the Contract award and during the term of the Contract must be reported on a revised SDVOB Utilization Plan and submitted to OGS.

C. OGS will review the submitted SDVOB Utilization Plan and advise the Bidder/Contractor of OGS acceptance or issue a notice of deficiency within 20 days of receipt.

D. If a notice of deficiency is issued, Bidder/Contractor agrees that it shall respond to the notice of deficiency, within seven business days of receipt, by submitting to OGS a written remedy in response to the notice of deficiency. If the written remedy that is submitted is not timely or is found by OGS to be inadequate, OGS shall notify the Bidder/Contractor and direct the Bidder/Contractor to submit, within five business days of notification by OGS, a request for a partial or total waiver of SDVOB participation goals on SDVOB 200. Failure to file the waiver form in a timely manner may be grounds for disqualification of the bid or proposal.

E. OGS may disqualify a Bidder's bid or proposal as being non-responsive under the following circumstances:

(a) If a Bidder fails to submit an SDVOB Utilization Plan;
(b) If a Bidder fails to submit a written remedy to a notice of deficiency;
(c) If a Bidder fails to submit a request for waiver; or
(d) If OGS determines that the Bidder has failed to document good faith efforts.

F. If awarded a Contract, Contractor certifies that it will follow the submitted SDVOB Utilization Plan for the performance of SDVOBs on the Contract pursuant to the prescribed SDVOB contract goals set forth above.

G. Contractor further agrees that a failure to use SDVOBs as agreed in the Utilization Plan shall constitute a material breach of the terms of the Contract. Upon the occurrence of such a material breach, OGS shall be entitled to any remedy provided herein, including but not limited to, a finding of Contractor non-responsibility.

III. Request for Waiver

A. **Prior to submission of a request for a partial or total waiver, Bidder/Contractor shall speak to the Designated Contacts at OGS for guidance.**

B. In accordance with 9 NYCRR § 252.2(m), a Bidder/Contractor that is able to document good faith efforts to meet the goal requirements, as set forth in clause IV below, may submit a request for a partial or total waiver on Form SDVOB 200, accompanied by supporting documentation. A Bidder may submit the request for waiver at the same time it submits its SDVOB Utilization Plan. If a request for waiver is submitted with the SDVOB Utilization Plan and is not accepted by OGS at that time, the provisions of clauses II (C), (D) & (E) will apply. If the documentation included with the Bidder's/Contractor's waiver request is complete, OGS shall evaluate the request and issue a written notice of acceptance or denial within 20 days of receipt.

C. Contractor shall attempt to utilize, in good faith, the SDVOBs identified within its SDVOB Utilization Plan, during the performance of the Contract. Requests for a partial or total waiver of established goal requirements made subsequent to Contract award may be made at any time during the term of the Contract to OGS but must be made no later than prior to the submission of a request for final payment on the Contract.

D. If OGS, upon review of the SDVOB Utilization Plan and Monthly SDVOB Compliance Report (SDVOB 101) determines that Contractor is failing or refusing to comply with the contract goals and no waiver has been issued in regard to such non-compliance, OGS may issue a notice of deficiency to the Contractor. The Contractor must respond to the notice of deficiency within seven business days of receipt. Such response may include a request for partial or total waiver of SDVOB contract goals.

Waiver requests should be sent to the primary designated contact as stipulated on the front cover of this solicitation and within the body of the solicitation itself.

IV. Required Good Faith Efforts

In accordance with 9 NYCRR § 252.2(n), Contractors must document their good faith efforts toward utilizing SDVOBs on the Contract. Evidence of required good faith efforts shall include, but not be limited to, the following:

(1) Copies of solicitations to SDVOBs and any responses thereto.

(2) Explanation of the specific reasons each SDVOB that responded to Bidders/Contractors' solicitation was not selected.

(3) Dates of any pre-bid, pre-award or other meetings attended by Contractor, if any, scheduled by OGS with certified SDVOBs whom OGS determined were capable of fulfilling the SDVOB goals set in the Contract.

(4) Information describing the specific steps undertaken to reasonably structure the Contract scope of work for the purpose of subcontracting with, or obtaining supplies from, certified SDVOBs.

(5) Other information deemed relevant to the waiver request.

V. Monthly SDVOB Contractor Compliance Report

In accordance with 9 NYCRR § 252.2(q), Contractor is required to report Monthly SDVOB Contractor Compliance to OGS during the term of the Contract for the preceding month's activity, documenting progress made towards achieving the Contract SDVOB goals. This information must be submitted using form SDVOB 101 available at https://ogs.ny.gov/veterans/ and should be completed by the Contractor and submitted to OGS, by the 10th day of each month during the term of the Contract, for the preceding month's activity to:

NYS Office of General Services
Financial Administration – Agency Procurement Office
Corning Tower, 32nd Floor, ESP
Albany, New York 12242

Please include the contract number and primary designated contact name with this report.

VI. Breach of Contract and Damages

In accordance with 9 NYCRR § 252.2(s), any Contractor found to have willfully and intentionally failed to comply with the SDVOB participation goals set forth in the Contract, shall be found to have breached the contract and Contractor shall pay damages as set forth therein.

ALL FORMS ARE AVAILABLE AT: https://ogs.ny.gov/veterans/

ATTACHMENT 1
BID PROPOSAL FORM
IFB #2791

Contractor: _____

The Contractor listed above agrees to provide all services in accordance with the specifications in this IFB for the prices bid below.

Grand Total Bid Amount is not a guarantee of payment. Contractor shall be paid only for actual services rendered.

Note: Bid submitted must include a value for each item listed on the Bid Proposal Form. Failure to do so may result in the rejection of the bid. See Section 4.3 - Price for details.

Item	Unit Price	Subtotal
1. Switchboard Substation SB-1 - FO# 31213696-002	$_____	$_____
2. Switchboard Substation A&B - FO# 21295878-007	$_____	$_____
		Grand Total **$_____**

Early payment discounts offered _____% / ____ days after receipt of proper invoice

_____
DATE

_____
SIGNATURE

_____
PRINT NAME / TITLE

IFB #2791 Attachment 2

State Tools and Equipment Use Request

Vendor/Contractor:_____

Date of Request	Description of Tool/Equipment	Tool/Equipment Identification # (if applicable)	OGS Approved (Yes/No)	Any OGS Imposed Limitations

Request Date:_____

Vendor Signature:_____

OGS Signature:_____ Date:_____

Changes to Initial Request

Request Date:_____

Contractor Signature:_____

OGS Signature:_____ Date:_____

Request Date:_____

Contractor Signature:_____

OGS Signature:_____ Date:_____

Request Date:_____

Contractor Signature:_____

OGS Signature:_____ Date:_____

Attachment 3

SQUARE D COMPANY
Schneider Electric

Job Name:	BUILDING #22 RENOVATIONS	Square D Quotation #:	21295878
Job Location:	ALBANY, NY	Quotation Revision #:	
		Sales Contact:	R. BLACKMAN
		Sales Contact Location:	124
Purchaser:	WARREN ELECTRIC SUPPLY INC	Customer:	HUEN ELECTRIC
Purchaser PO #:	535087-DIR-0277968	Customer PO #:	
User:	NYS OGS	Architect:	URS CORPORATOIN
User Location:		Cons. Engineer:	
Drawing Status:	RECORD		

TABLE OF CONTENTS

SQUARE D FACTORY ORDER NUMBER: 21295878-003

Equipment Designation	Equipment Type	Drawing Type	Drawing Number	Page	Revision Level
PRIMARY SWITCH "A"	MASTERCLAD SWITCHGEAR	ELECTRICAL BILL OF MATERIAL	T21295878-003-BM	4	1
		ENGRAVED NAMEPLATES	T21295878-003-EP	2	A
		EXCEPTIONS & CLARIFICATIONS	T21295878-003-EX	1	B
		ELEVATION	F21295878-003-01	1	B
		MIMIC BUS	F21295878-003-01	2	B
		TOP VIEW/FLOOR PLAN	F21295878-003-02	1	-
		GENERAL NOTES	F21295878-003-03	1	-
		DETAIL VIEW	F21295878-003-51	1	-
		SECTION VIEW	S21295878-003-01	1	B
		DOOR DETAIL VIEWS	D21295878-003-51	1	C
		MIMIC BUS	D21295878-003-51	2	B
		ONE LINE DIAGRAM	O21295878-003-01	1	C
		ELECTRICAL INTERLOCK SCHEME	K21295878-003-01	1	B
		CONTROL SCHEMATIC	C21295878-003-01	1	C
			C21295878-003-02	1	C
			C21295878-003-02	2	A
			C21295878-003-03	1	A
			C21295878-003-03	2	B
			C21295878-003-AL	1	B
		COMMUNICATION SCHEMATIC	C21295878-003-CM	1	A
		INFORMATION	C21295878-003-IF	1	-
		ELEMENTARY DIAGRAMS	E21295878-003-01	1	-
		THREE LINE DIAGRAM	E21295878-003-02	1	-
			E21295878-003-02	2	-
		ELEMENTARY DIAGRAMS	E21295878-003-03	1	-
		WIRING DIAGRAM	W21295878-003-01	1	A
PRIMARY SWITCH "A'			W21295878-003-01	2	-
			W21295878-003-02	1	-
PRIMARY SWITCH "A'			W21295878-003-02	2	-
PRIMARY SWITCH "A"			W21295878-003-03	1	A

These products are manufactured in a facility which is quality systems registered by Underwriters Laboratories to ISO 9000

TABLE OF CONTENTS

SQUARE D FACTORY ORDER NUMBER: 21295878-003

Equipment Designation	Equipment Type	Drawing Type	Drawing Number	Page	Revision Level
PRIMARY SWITCH "A'			W21295878-003-03	2	A
PRIMARY SWITCH "A"			W21295878-003-IC	1	–
		BREAKER	R21295878-003-01	1	–
		ELECTRIC GND TEST DEVICE	R21295878-003-02	1	–
		TEST CABINET	R21295878-003-03	1	–
		RATING NAMEPLATE	N21295878-003-01	1	–

These products are manufactured in a facility which is quality systems registered by Underwriters Laboratories to ISO 9000

Summary Bill of Material

Printed 12/18/06 13:01:26 by MSMD67

Find #	Part Number	Qty Per	Total Qty	Function	Supplier	Description	Rev
001	9001KP38DGS6G31	4.00	4.00	G	SQUARE D COMPANY	PILOT LIGHT, 135VDC, GREEN LED TYPE WITH GREEN COLOR CAP, FOR 125VDC BATTERY SYSTEM.	
002	9001KP38DRS6R31	4.00	4.00	R	SQUARE D COMPANY	PILOT LIGHT, 135VDC, RED LED TYPE WITH RED COLOR CAP, FOR 125VDC BATTERY SYSTEM.	
003	2438D	4.00	4.00	01	ELECTROSWITCH	SWITCH, CONTROL, SERIES 24, 1 TRIP, 1 CLOSE, SPRING RETURN, PISTOL GRIP HANDLE.	
004	750P5G5S5HIA20R	4.00	4.00	11	GE/MULTILIN	RELAY, FEEDER MANAGEMENT, 50/51, 50G, 51G, 67, 27, 59, 47 , 25, 81 & METERING. PH & GRD CT RATING 5A,SENSITIVE GROUND INPUT 5A CONTROL VOLTS 90-300VDC / 70-265VAC, (8) 20ma ANALOG OUTPUTS, RED BKR CLOSED LED .RS232/RS485 COMM. PART NUM 750P5G5S5HIA20RE	
005	FT78	1.00	1.00	TS	INSTRUMENT TRANSFORMERS	SWITCH, TEST, TYPE FT, 10 POLE, 8 CURRENT (B-I) AND 2 POTENTIAL (A&J).	
006	18100106	1.00	1.00	TERMINATOR	GE/MUTILIN	TERMINATING ASSEMBLY, CONSISTS OF 120 OHM RESISTOR AND 1nF CAPACITOR.	
007	9001KP38LYA31	4.00	4.00	A	SQUARE D COMPANY	PILOT LIGHT, 120VAC, YELLOW LED TYPE WITH AMBER COLOR CAP.	
008	13F155B12J7K0	4.00	4.00	RES	NEWARK	RESISTOR, 7K OHM, 12 WATT. B12J7K0	
009	CM4250	1.00	1.00	CM	SQUARE D COMPANY	CM4250, CIRCUIT MONITOR.	
010	CMDLC	1.00	1.00	CM DISPLAY	SQUARE D COMPANY	POWERLOGIC CIRCUIT MONITOR LCD DISPLAY.	
011	IOC44	2.00	2.00	I/O	SQUARE D COMPANY	CIRCUIT MONITOR DIGITAL I/O CARD.	
012	63230-300-64	1.00	1.00	ADAPTER ASSY	SQUARE D COMPANY	CM4000 FILLER/ADAPTER PLATE ASSEMBLY: INCLUDES ADAPTER PLATE, HARDWARE KIT, AND CABLE FOR CONNECTING CM4000 MODULE TO THE DISPLAY.	
013	7805D	1.00	1.00	86	ELECTROSWITCH	RELAY, LOCKOUT, 125VDC, TYPE LOR, 5 DECK,10 TRIP, 10 RESET, HAND RESET, WITH OVAL HANDLE.	

Summary Bill of Material

Printed 12/18/06 13:01:26 by MSMD67

Find #	Part Number	Qty Per	Total Qty	Function	Supplier	Description	Rev
014	9001KP38DYS6A31	1.00	1.00	A	SQUARE D COMPANY	PILOT LIGHT, 135VDC, YELLOW LED TYPE WITH AMBER COLOR CAP, FOR 125VDC BATTERY SYSTEM.	
020	25499-12961	9.00	9.00	8	SQUARE D COMPANY	FUSIBLE DISCONNECT, 30AMP, 2 POLE, 600VAC/DC, FOR USE WITH 1.5" FUSES.	
021	25419-51500	16.00	16.00	FU	SQUARE D COMPANY	FUSE, ONE TIME, 15 AMPERE, 1.5", 500VAC/500VDC.	
022	25419-50500	2.00	2.00	FU	SQUARE D COMPANY	FUSE, ONE TIME, 5 AMPERE, 1.5", 500VAC/500VDC.	
023	BAF5	4.00	4.00	FU	BUSSMANN	FUSE, ONE TIME, 5 AMPERES, 1.5", 250VAC.	
024	CSL3860010	1.00	1.00	27DC	POTTER & BRUMFIELD	RELAY, DC VOLTAGE, TYPE CSL, ADJUSTABLE PICKUP 92-140, AND DROPOUT 90-138, DPDT, 150VDC MAXIMUM.	
025	94B1201	1.00	1.00	CLIP	NEWARK	RELAY SPRING CLIP, MAGNECRAFT/STRUTHERS-DUNN 16-1278.	
026	20C318	1.00	1.00	CLIP	POTTER & BRUMFIELD	PB RELAY SPRING CLIP	
027	SR2P-06	1.00	1.00	SKT	IDEC	RELAY SOCKET, 8 PIN, TUBULAR, 1 TIER, SCREW TERMINAL, 300V.	
028	7014PD	2.00	2.00	62	AGASTAT	RELAY, TIME DELAY, MODEL 7014, ON DELAY, 4 POLE DOUBLE THROW, 125VDC, 10-100 SECONDS.	
030	785R501	12.00	12.00	CT	SQUARE D COMPANY	CURRENT TRANSFORMER, SINGLE RATIO, MODEL 785R, 500:5, C100.	
031	KUXSC4S2093	4.00	4.00	SCTB	BUSSMANN	TERMINAL BLOCK, SHORTING TYPE, BINDER HEAD SCREW LUG (#10-32), 4 POINT, #18-#10 WIRE, 30A, 600V.	
032	PTG521101382FFG	4.00	4.00	VT	INSTRUMENT TRANSFORMERS	VOLTAGE TRANSFORMER, 2 FUSE, 115:1 (13,800:120V), 110kV BIL, 1500VA, TYPE PTG-5, #PTG521101382FFGC2, WITH 0.5E FUSES (BUSSMANN #15.5CAVH0.5E).	
040	V5D6133Y000	3.00	3.00	52	SQUARE D COMPANY	CIRCUIT BREAKER, VR, VACUUM, 15.0KV, 25KA, 1200A, 125VDC CLOSE, 125VDC TRIP, MOC (VR-15050-12).	

Summary Bill of Material

Printed 12/18/06 13:01:26 by MSMD67

Find #	Part Number	Qty Per	Total Qty	Function	Supplier	Description	Rev
041	46007-380-51	4.00	4.00	52S	SQUARE D COMPANY	MOC (MECH. OPER. CONTACT) SW., 5a, 5b, MASTERCLAD SWGR., STATIONARY MTD., OPERATES IN TEST AND CONN.	
042	46007-381-51	4.00	4.00	52H	SQUARE D COMPANY	TOC (TRUCK OPER. CONTACT) SWITCH, 5a, 5b, MASTERCLAD SWITCHGEAR, CELL MOUNTED.	
044	9L23FXX018XHS1	12.00	12.00	LA	GENERAL ELECTRIC	SURGE ARRESTER, DISTRIBUTION CLASS, HEAVY DUTY, TYPE XEP, 18KV, 15.3KV MCOV.	
045	P21295878003001	1.00	1.00	KEYLOCK	FEDERAL PIONEER	P7997 = SMYRNA PO#, KEY INTERLOCK VFL000010SH-----, KEY REMOVABLE EXTENDED, KEY INTERCHANGE A1 , USER - SOB CAMPUS , USER LOCATION - ALBANY, NEW YORK	
046	YA312N	27.00	27.00	LUG	BURNDY	LUG, CRIMP, LONG BARREL, TIN PLATED, #3/0-350MCM CU, (2) 1/2" HOLES, RED.	
047	YA282LN	11.00	11.00	LUG	BURNDY	LUG, COMPRESSION, COPPER, STD BARREL, TIN PLATED, #4/0, 2 HOLE PAD, 1/2" BOLT, PURPLE COLOR CODE.	
050	46008-880-50	1.00	1.00	CRTN PACK	SQUARE D COMPANY	CARTON PACKING, SER 5 INDOOR, CONSISTING OF: 6055-31 & 6055-30 MANUALS AND LOOSE PARTS TAG.	
051	46007-382-50	1.00	1.00	RACK HNDL	SQUARE D COMPANY	CIRCUIT BREAKER RACKING HANDLE, MASTER CLAD SWITCHGEAR.	
052	TP111	1.00	1.00	TEST PLUG	INSTRUMENT TRANSFORMERS	TEST PLUG, SERIES, 10 POLE FOR FT TEST SWITCHES FT55, 58, 76, 78.	
053	46007-488-51	1.00	1.00	TEST CAB	SQUARE D COMPANY	TEST CABINET, 120VAC/DC, DC TRIP FOR VR CIRCUIT BREAKERS.	
054	46007-489-50	1.00	1.00	TEST JUMPER	SQUARE D COMPANY	TEST JUMPER, 14 FEET LONG FOR VR CIRCUIT BREAKERS.	
055	46007-383-50	1.00	1.00	LIFT TRUCK	SQUARE D COMPANY	CIRCUIT BREAKER LIFT TRUCK, IN/OUTDOOR, MASTER CLAD SWGR.	
056	46002-595-51	1.00	1.00	AGTU	SQUARE D COMPANY	CONTROL CABLE 50' LONG WITH PUSH BUTTON STATION	
057	46002-596-50	1.00	1.00	AGTU	SQUARE D COMPANY	CONTROL POWER CORD 115V, 60 CYCLES	

Summary Bill of Material

Printed 12/18/06 13:01:26 by MSMD67

Find #	Part Number	Qty Per	Total Qty	Function	Supplier	Description	Rev
058	46008-525-50	1.00	1.00	EGTU	SQUARE D COMPANY	ELECTRICAL GRD. & TEST UNIT, 3 PORT, 1200/2000 AMP CONTACTS, SERIES 5.	
059	1422123	4.00	4.00	TB	MARATHON	TERMINAL BLOCK, POWER BLOCK, 200A, 600V, 1/4-20 SCREW, 2 POLE, CU.	
060	9365	20.00	20.00	CABLE	BELDEN	CABLE, 300V SHIELDED CONTROL TYPE, THREE CONDUCTORS UNDER OVERALL BELDFOIL SHIELD, #18 GAUGE, PVC JACKET.	

REV	DESCRIPTION	BY	DATE	B	ADD BUS VT'S	VN	06/05/06	-	----	--	--/--/--
A	REMOVE CPT	VN	05/16/06	-	----	--	--/--/--	-	----	--	--/--/--

FO #21295878-002

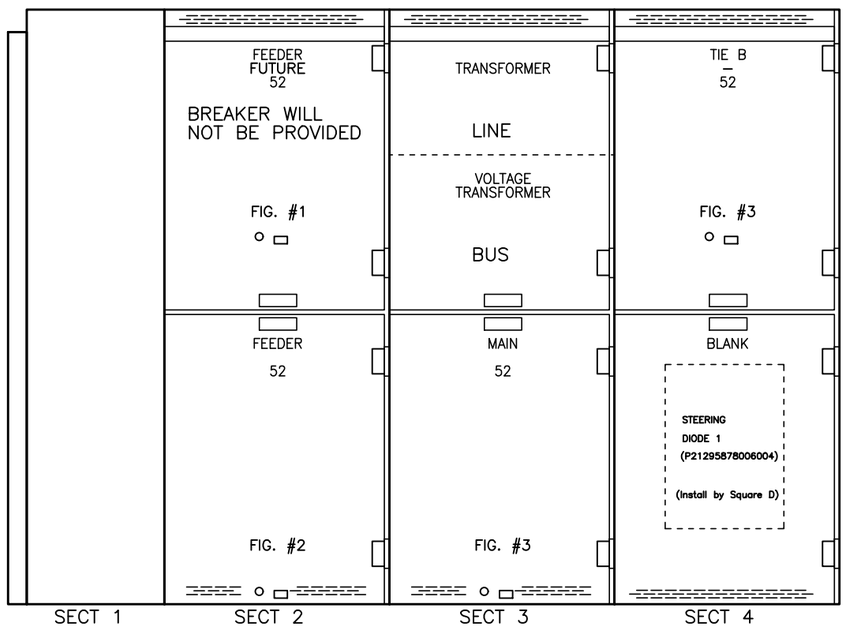

FO #21295878-003

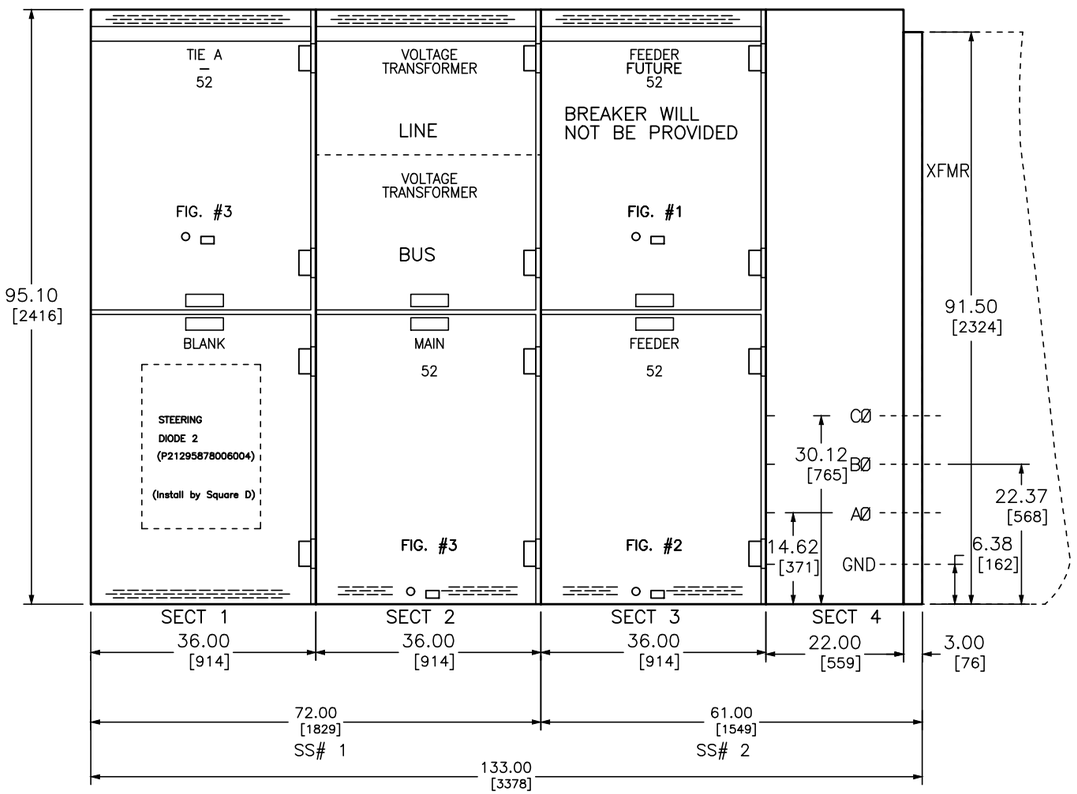

FIG. # REFERS TO
ELECTRICAL GROUND AND TEST DEVICE
SEE DWG. 46008-520 OR R21295878-003-02
FOR CELL INTERLOCK LOCATIONS.

DUAL DIMENSIONS: INCHES
MILLIMETERS

JOB NAME:	BUILDING #22 RENOVATIONS	EQUIPMENT DESIGNATION:	PRIMARY SWITCH "A"
JOB LOCATION:	ALBANY NY	EQUIPMENT TYPE:	MASTERCLAD SWITCHGEAR
DRAWN BY:	CAD	DRAWING TYPE:	ELEVATION
ENGR:	VAN N. NGUYEN		SQUARE D Schneider Electric
DATE:	FEBRUARY 02, 2006		
DRAWING STATUS:	RECORD	DWG# F21295878-003-01	PG 1 OF 2 REV B

REV	DESCRIPTION	BY	DATE								
A	ADD BUS VT'S	VN	06/05/06	B	ADD BUS VT'S	VN	06/05/06	-	----	--	--/--/--
				-	----	--	--/--/--	-	----	--	--/--/--

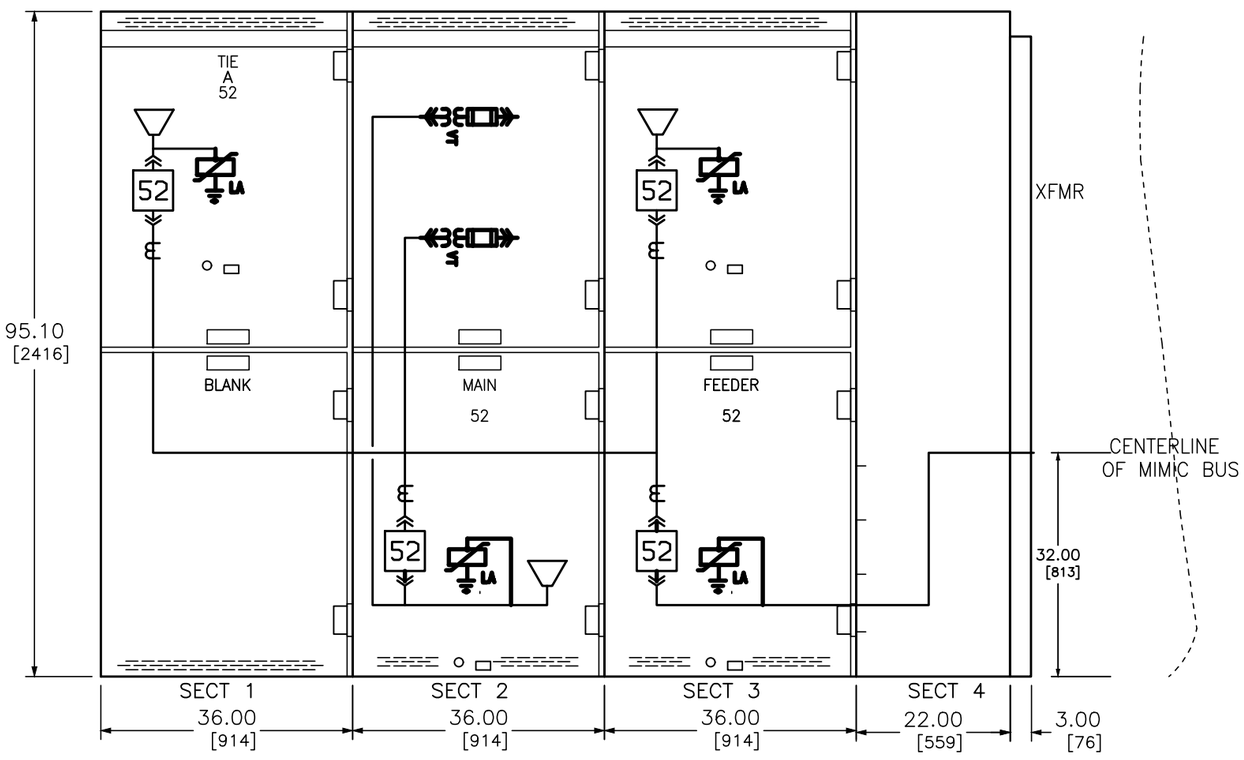

MIMIC BUS
BLACK, ENGRAVED STRIP

DUAL DIMENSIONS: INCHES
MILLIMETERS

JOB NAME:	BUILDING #22 RENOVATIONS	EQUIPMENT DESIGNATION:	PRIMARY SWITCH "A"
JOB LOCATION:	ALBANY NY	EQUIPMENT TYPE:	MASTERCLAD SWITCHGEAR
DRAWN BY:	CAD	DRAWING TYPE:	MIMIC BUS
ENGR:	VAN N. NGUYEN		SQUARE D Schneider Electric
DATE:	FEBRUARY 02, 2006		
DRAWING STATUS:	APPROVAL	DWG# F21295878-003-01	PG 2 OF 2 REV B

REV	DESCRIPTION	BY	DATE	–	----	--	--/--/--	–	----	--	--/--/--
–	----	--	--/--/--	–	----	--	--/--/--	–	----	--	--/--/--

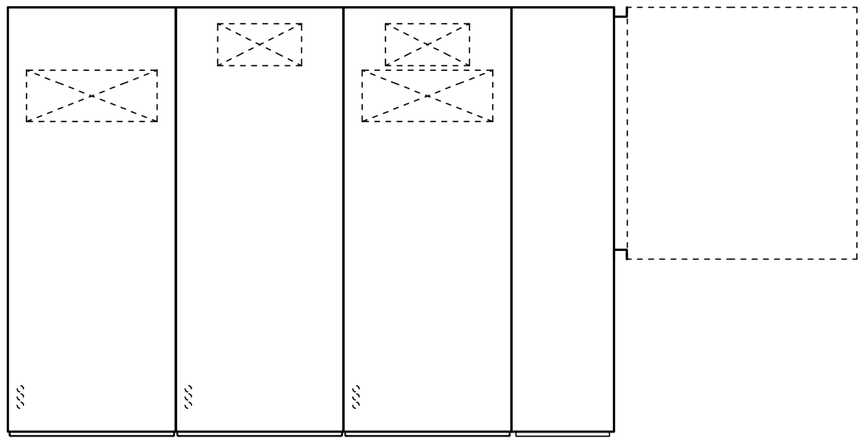

TOP VIEW

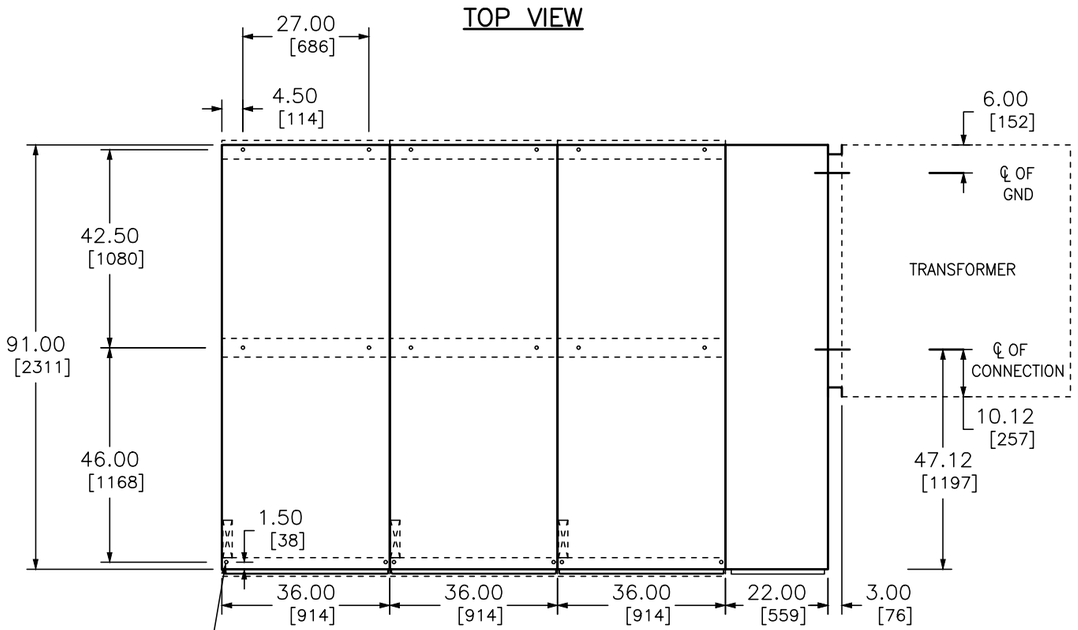

FLOOR PLAN

SEE DRAWING –51 FOR INSTALLATION–FOUNDATION REQUIREMENTS

DUAL DIMENSIONS: INCHES
MILLIMETERS

JOB NAME:	BUILDING #22 RENOVATIONS	EQUIPMENT DESIGNATION:	PRIMARY SWITCH "A"
JOB LOCATION:	ALBANY NY	EQUIPMENT TYPE:	MASTERCLAD SWITCHGEAR
DRAWN BY:	CAD	DRAWING TYPE:	TOP VIEW/FLOOR PLAN
ENGR:	VAN N. NGUYEN		SQUARE D Schneider Electric
DATE:	FEBRUARY 02, 2006		
DRAWING STATUS:	RECORD	DWG# F21295878–003–02	PG 1 OF 1 REV –

REV	DESCRIPTION	BY	DATE								
–	----	--	--/--/--	–	----	--	--/--/--	–	----	--	--/--/--
				–	----	--	--/--/--	–	----	--	--/--/--

GENERAL NOTES:

PRODUCT DESCRIPTION AND RATINGS:

POWER SYSTEM DATA:

13800 VOLTS, 3 PHASE, 3 WIRE WYE SOLIDLY GROUNDED
95 KV BIL, 60 HERTZ FREQUENCY

BUS SYSTEM DATA:

1200 AMPERES, SILVER PLATED COPPER, EPOXY INSULATED
36 KA RMS SYMMETRICAL BUS BRACING
EPOXY STAND–OFF INSULATORS
GLASS POLYESTER BETWEEN SECTION BUS BARRIER
BREAKER BUSHINGS IN CELL ARE POLYESTER
SILVER PLATED COPPER GROUND BUS

ENCLOSURE DATA:

NEMA 1 INDOOR CONSTRUCTION
ANSI #49 FINISH, PROCEDURES: ZINC PHOSPHATE WITH NON–CHROMIC SEAL, RUST INHIBITED TREATMENT WITH BAKED POLYESTER COATING.
REAR ACCESS BY BOLTED PANELS
WHITE INTERIOR LOW VOLTAGE PANELS

HANDLING:

SWITCHGEAR SECTIONS ARE FURNISHED WITH FOUR LIFTING LUGS AND ARE SHIPPED ON SKIDS. ROLLERS SHALL ONLY BE USED WITH SKID IN PLACE.

SWITCHGEAR SHIPPING WEIGHT WITH BREAKERS INSTALLED:

SHIPPING SPLIT 1 WEIGHT: 5730 LBS 2605 KG
SHIPPING SPLIT 2 WEIGHT: 4395 LBS 1998 KG

BREAKER WEIGHT:

1200A, 380 LBS 173KG
2000A, 430 LBS 196KG
3000A, 700 LBS 318KG

CODE STANDARDS:

ANSI, NEMA, UL

PRODUCT INFORMATION:

WIRING:

CONTROL WIRING IS # 12 AWG, TYPE SIS. MOC'S, TOC'S AND SECONDARY DISCONNECTS WILL REMAIN #14 AWG.
CURRENT CIRCUIT WIRING IS # 10 AWG, TYPE SIS

WIRE LABELING:

WIRES SHALL BE LABELED WITH DESTINATION MARKING. (POINT TO POINT)

TERMINATIONS:

UNINSULATED RING TYPE LUGS SHALL BE USED (WHERE APPLICABLE) ON ALL LOW VOLTAGE SCREW/STUD TERMINALS.
TERMINAL BLOCKS ARE SCREW TYPE LUGS (TYPE OTTA–6).
SQUARE D COMPRESSION BOX LUGS (TYPE 9080GR6) TERMINAL BLOCKS FOR ALL COMMUNICATIONS TERMINATIONS WHEN REQUIRED.

BREAKER SPECIFICATION:

BREAKER TYPE IS SERIES 5 – VACUUM
BREAKER KV/KA/(MVA): 15.0/23/(500)
CLOSE CONTROL POWER IS 125VDC BY SQUARE D
TRIP CONTROL POWER IS 125VDC BY SQUARE D
MOC PROVISIONS

RELAY REQUIREMENTS:

RELAYS REQUIREMENTS PER QUOTE
RELAYS FURNISHED WITH RS–485 AND MODBUS PROTOCOL

OPTIONS/ACCESSORIES:

GENERAL OPTIONS:

AUXILIARY CONTROL POWER 120VAC BY SQUARE D

LIST OF MISC. ACCESSORIES:

SHORTING TERMINAL BLOCKS FOR ALL CT CIRCUITS
BREAKER LIFT TRUCK
BREAKER TEST CABINET
BREAKER TEST JUMPER (14FT)

LIST OF MISC. STRUCTURE OPTIONS:

ELECTRICAL GROUND & TEST DEVICE
CABLE SUPPORTS

SPECIAL FEATURES–(OVERAL DIMENSIONS ARE SUBJECT TO CHANGE.)

IF SPECIAL FEATURES ARE INCLUDED IN THIS BILL OF MATERIAL, THEY WILL NOT APPEAR ON THE FRONT– ELEV OR ONE– LINE DRAWING AND MAY ALTER THE FINAL LAYOUT AND DIMENSIONS.

GENERAL RECORD

2 – NORMAL POWER A–B, B–C AVAILABLE LED LIGHTS
1 – CONT PWR FAILURE ALARM RELAY

CUSTOMER GROUND BUS CONNECTION 1/4" X 4" MINIMUM

JOB NAME:	BUILDING #22 RENOVATIONS	EQUIPMENT DESIGNATION:	PRIMARY SWITCH "A"
JOB LOCATION:	ALBANY NY	EQUIPMENT TYPE:	MASTERCLAD SWITCHGEAR
DRAWN BY:	CAD	DRAWING TYPE:	GENERAL NOTES
ENGR:	VAN N. NGUYEN		SQUARE D Schneider Electric
DATE:	FEBRUARY 02, 2006		
DRAWING STATUS:	RECORD	DWG# F21295878–003–03	PG 1 OF 1 REV –

REV	DESCRIPTION	BY	DATE								
–	----	--	--/--/--	–	----	--	--/--/--	–	----	--	--/--/--
				–	----	--	--/--/--	–	----	--	--/--/--

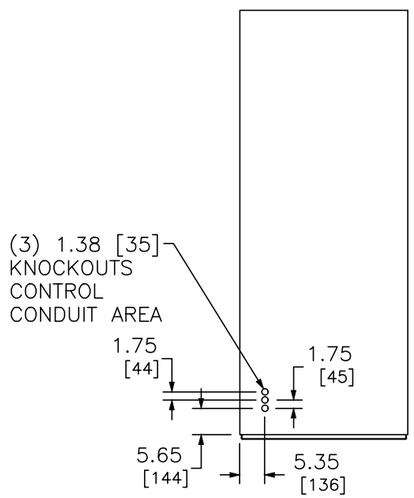

TOP VIEW

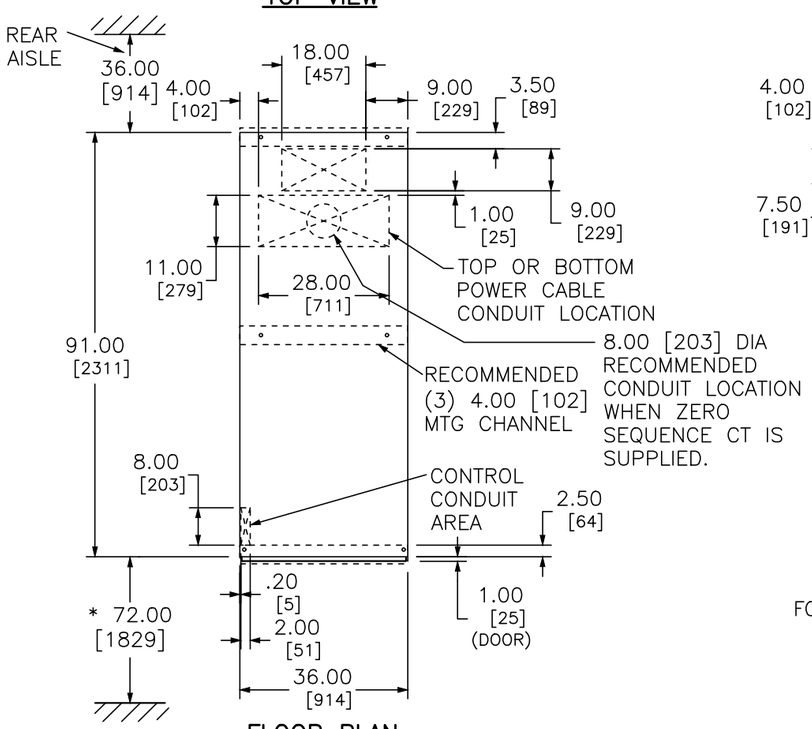

FLOOR PLAN

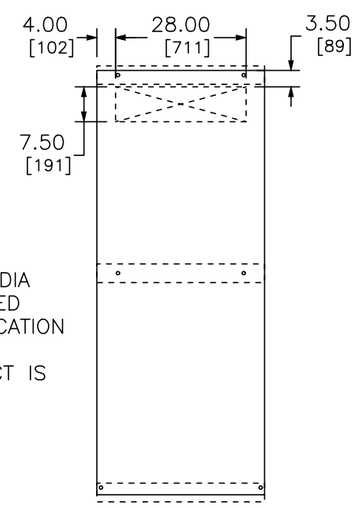

FOR TIE AND 36.00 [914]
METERING SECTION

INSTALLATION–FOUNDATION REQUIREMENTS

* WHEN LIFT TRUCK IS REQUIRED, RECOMMENDED 72.00 [1829] FRONT AISLE, 64.00 [1626] MINIMUM.

THE SWITCHGEAR MUST BE INSTALLED ON A FLAT, LEVEL SURFACE. SQUARE D RECOMMENDS INSTALLING THE SWITCHGEAR ON A CONCRETE PAD LEVELED TO .0625 IN ANY SQUARE YARD, WITH STEEL CHANNELS INSTALLED IN THE PAD FOR ANCHORING THE SWITCHGEAR.

POUR A 72.00 [1829] WIDE AISLE SPACE IN FRONT OF THE MOUNTING PAD, FLUSH WITH AND FINISHED WITH THE SAME TOLERANCE AS THE MOUNTING PAD. THIS LEVEL SURFACE IS NECESSARY FOR THE CIRCUIT BREAKER LIFT TRUCK AND FOR INSERTING THE CIRCUIT BREAKERS INTO THE BOTTOM COMPARTMENT.

A MINIMUM OF 36.00 [914] IS NECESSARY ON THE RIGHT END FACING THE FRONT OF THE LINE–UP. THIS SPACE IS NECESSARY FOR DOOR CLEARANCE WHEN REMOVING THE CIRCUIT BREAKERS.

RECOMMENDED BASE CHANNEL MOUNTING

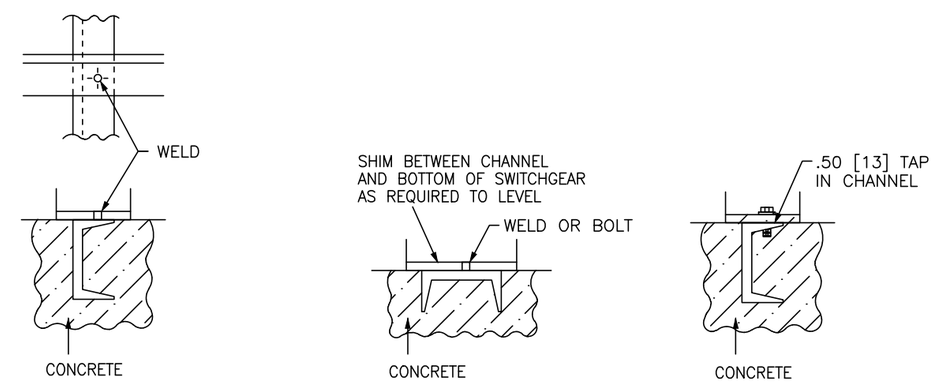

DUAL DIMENSIONS: INCHES / MILLIMETERS

JOB NAME:	BUILDING #22 RENOVATIONS	EQUIPMENT DESIGNATION:	PRIMARY SWITCH "A"
JOB LOCATION:	ALBANY NY	EQUIPMENT TYPE:	MASTERCLAD SWITCHGEAR
DRAWN BY:	CAD	DRAWING TYPE:	DETAIL VIEW
ENGR:	VAN N. NGUYEN		SQUARE D Schneider Electric
DATE:	FEBRUARY 02, 2006		
DRAWING STATUS:	RECORD	DWG# F21295878–003–51	PG 1 OF 1 REV –

REV	DESCRIPTION	BY	DATE									
B	ADD VT'S	VN	06/05/06	-	----	--	--/--/--
A	DELETE CPT, ADD LA'S	VN	05/16/06	-	----	--	--/--/--	-	----	--	--/--/--

RIGHT SIDE SECTION VIEWS

SECTION 1

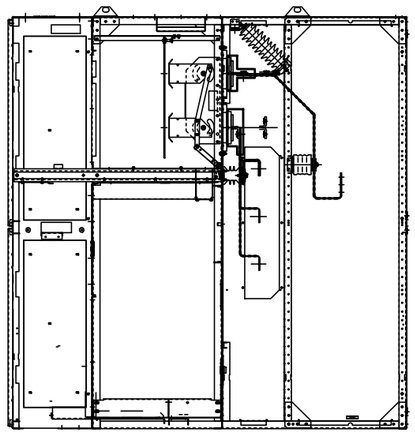

SECTION 2

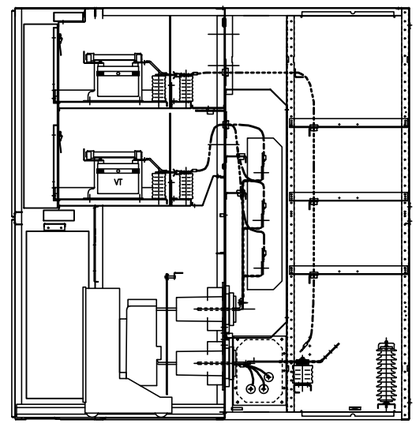

SECTION 3

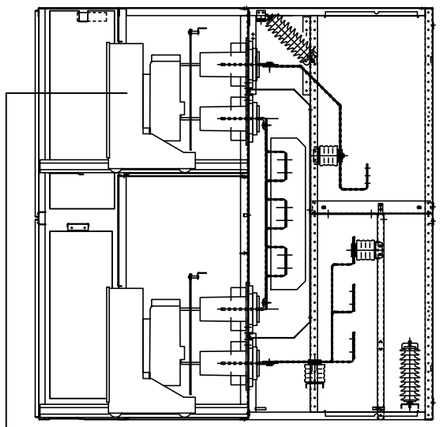

BREAKER WILL NOT BE PROVIDED

JOB NAME:	BUILDING #22 RENOVATIONS	EQUIPMENT DESIGNATION:	PRIMARY SWITCH "A"
JOB LOCATION:	ALBANY NY	EQUIPMENT TYPE:	MASTERCLAD SWITCHGEAR
DRAWN BY:	CAD	DRAWING TYPE:	SECTION VIEW
ENGR:	VAN N. NGUYEN		SQUARE D Schneider Electric
DATE:	FEBRUARY 02, 2006		
DRAWING STATUS:	RECORD	DWG# S21295878-003-01	PG 1 OF 1 REV B

REV	DESCRIPTION	BY	DATE									
A	ADD CM4000, 750	VN	05/16/06	B	ADD BUS LIGHTS	VN	06/05/06	–	----	--	--/--/--
				C	REVISED LOWER DOOR SECT. 1 TO DRS-00000-00930	VN	07/11/06	–	----	--	--/--/--

SECTION 1

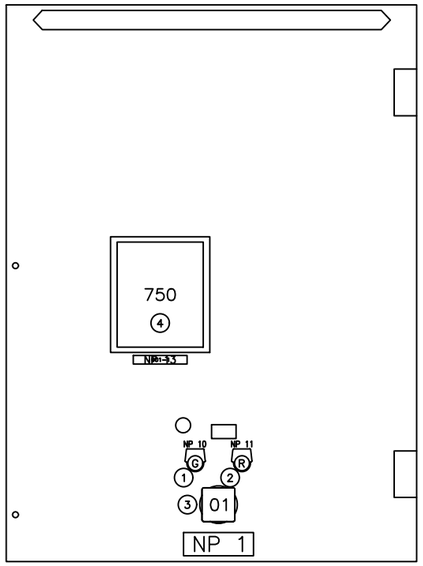

UPPER DOOR DETAIL DRS-00000-02452

SECTION 2

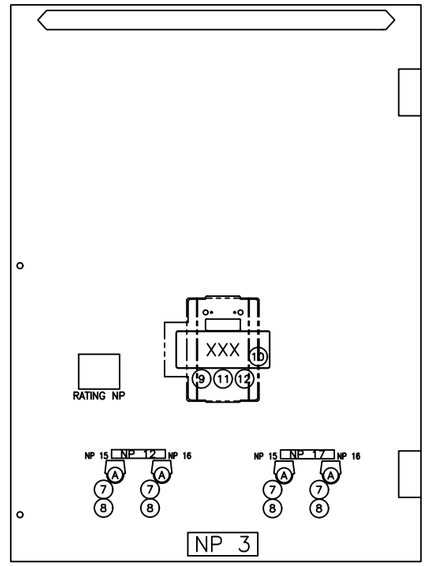

UPPER DOOR DETAIL DRS-00000-02454

SECTION 3

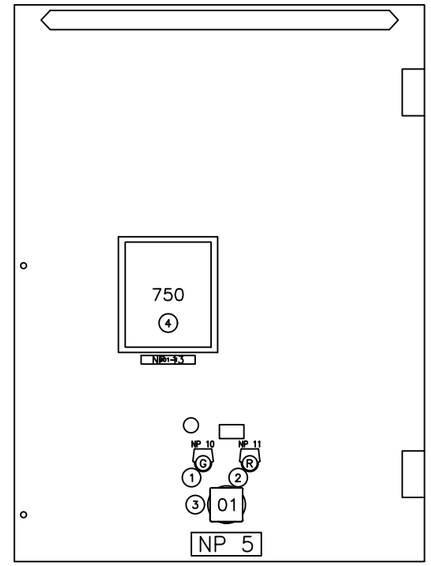

UPPER DOOR DETAIL DRS-00000-02452

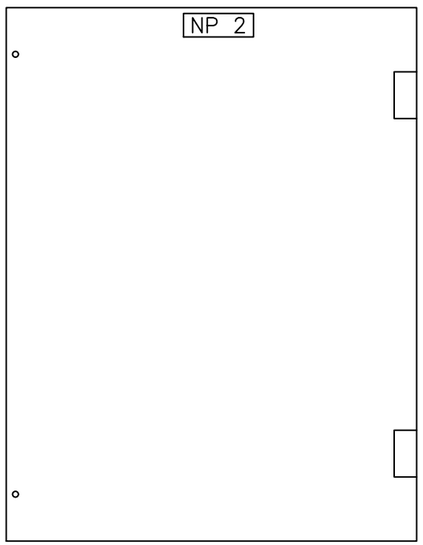

LOWER DOOR DETAIL DRS-00000-00930

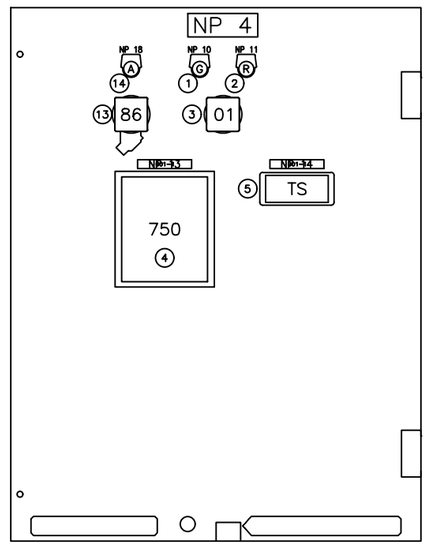

LOWER DOOR DETAIL DRS-00000-02455

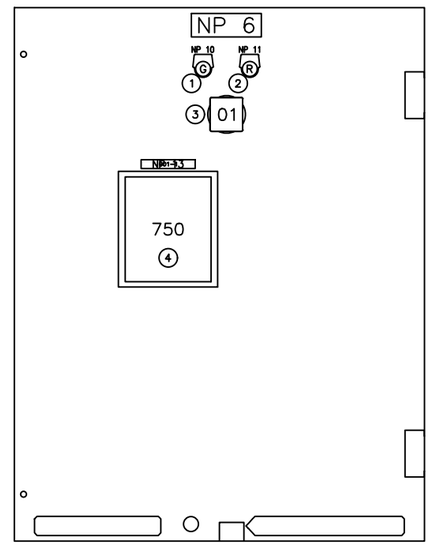

LOWER DOOR DETAIL DRS-00000-02453

JOB NAME:	BUILDING #22 RENOVATIONS	EQUIPMENT DESIGNATION:	PRIMARY SWITCH "A"
JOB LOCATION:	ALBANY NY	EQUIPMENT TYPE:	MASTERCLAD SWITCHGEAR
DRAWN BY:	CAD	DRAWING TYPE:	DOOR DETAIL VIEWS
ENGR:	VAN N. NGUYEN		SQUARE D Schneider Electric
DATE:	FEBRUARY 02, 2006		
DRAWING STATUS:	RECORD	DWG# D21295878-003-51	PG 1 OF 2 REV C

REV	DESCRIPTION	BY	DATE								
B	ADD BUS VT'S	VN	06/05/06	–	----	VN	06/05/06	–	----	--	--/--/--
A	ADD BUS VT'S	VN	06/05/06	–	----	--	--/--/--	–	----	--	--/--/--

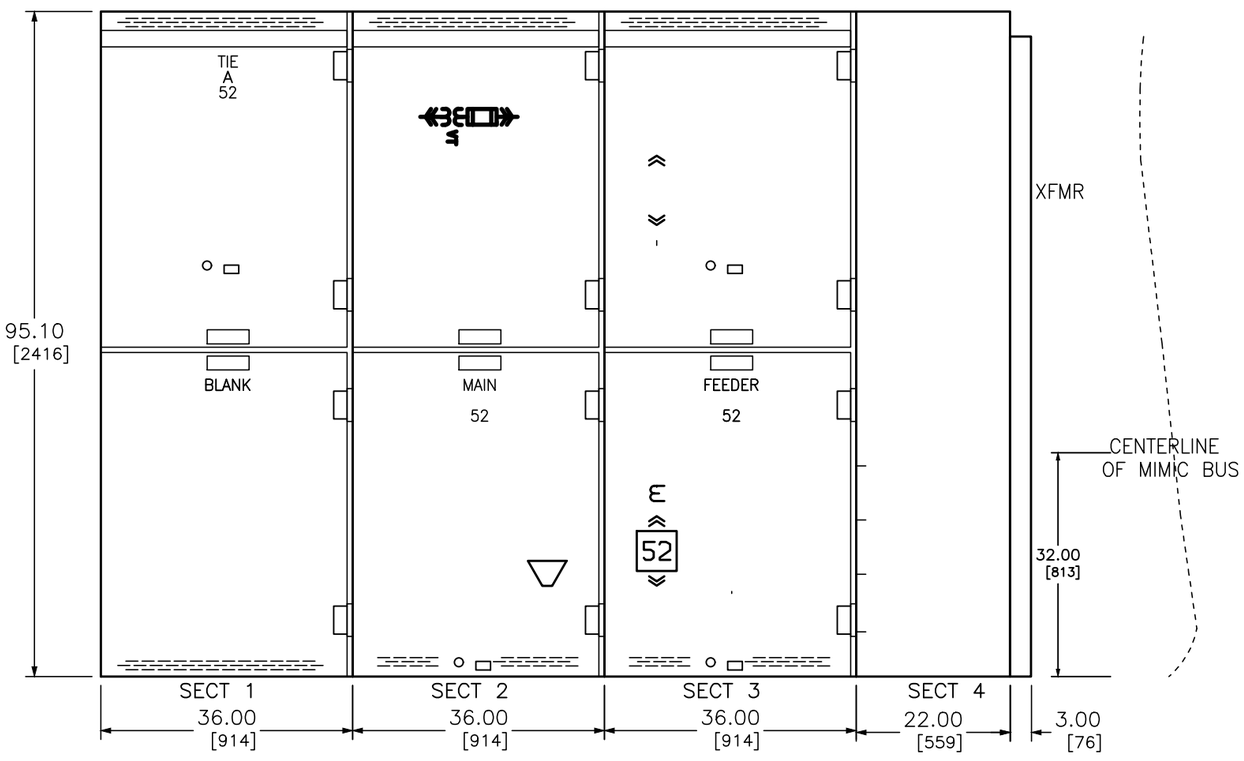

MIMIC BUS
BLACK, ENGRAVED STRIP

DUAL DIMENSIONS: INCHES
MILLIMETERS

JOB NAME:	BUILDING #22 RENOVATIONS	EQUIPMENT DESIGNATION:	PRIMARY SWITCH "A"
JOB LOCATION:	ALBANY NY	EQUIPMENT TYPE:	MASTERCLAD SWITCHGEAR
DRAWN BY:	CAD	DRAWING TYPE:	MIMIC BUS
ENGR:	VAN N. NGUYEN		SQUARE D Schneider Electric
DATE:	FEBRUARY 02, 2006		
DRAWING STATUS:	RECORD	DWG# D21295878-003-51	PG 2 OF 2 REV B

REV	DESCRIPTION	BY	DATE									
A	DELETE CPT, ADD LA, 750, LIGHTS	VN	05/15/06	B	REVISED CT RATIO ,ADD LUGS, ADD 86	VN	06/05/06	D	MAIN 750, SYNC. MAIN 21295878-002	VN	11/28/07
				C	ADD GND LUGS	VN	06/14/06	–	----	--	--/--/--

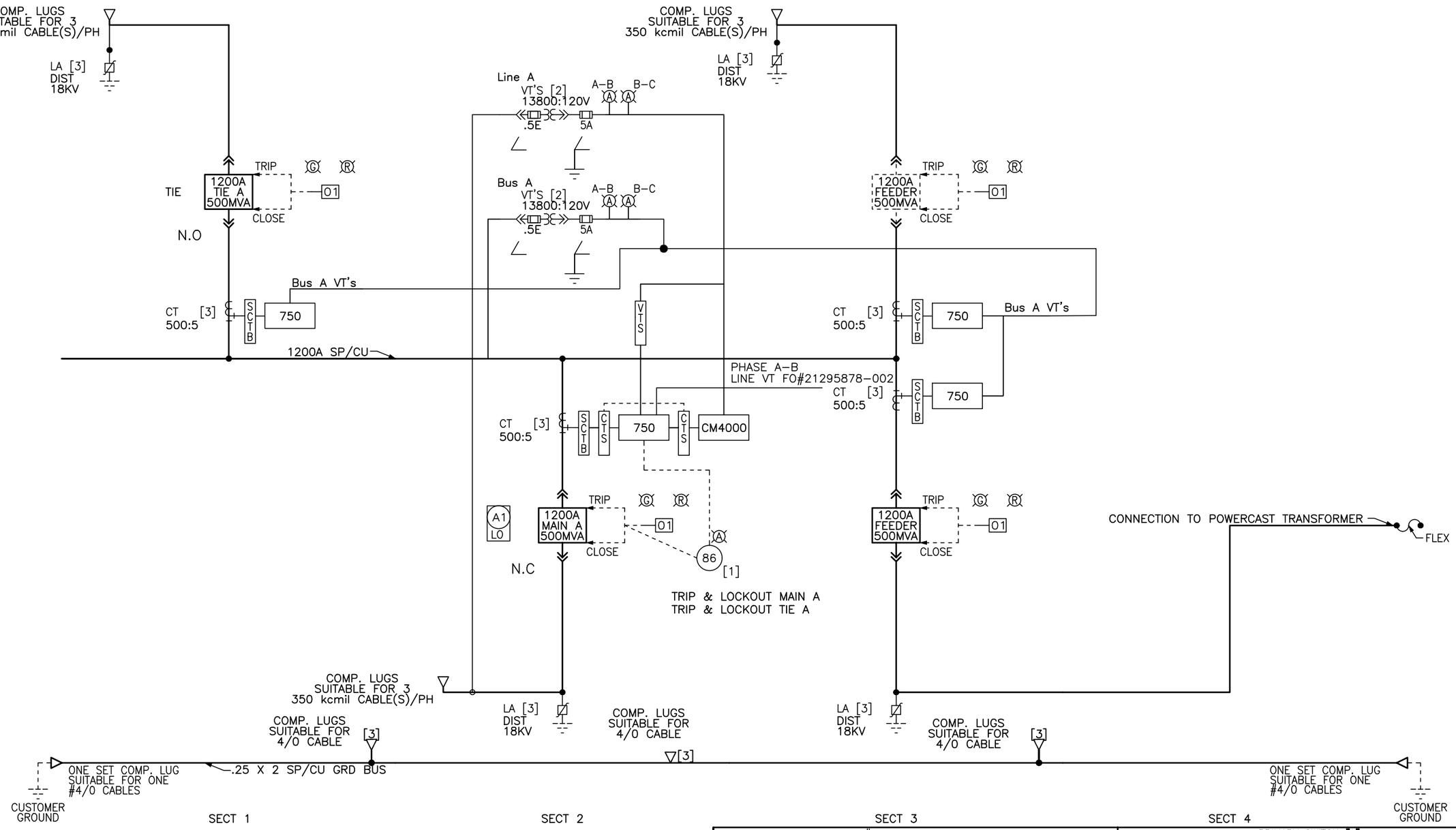

JOB NAME:	BUILDING #22 RENOVATIONS	EQUIPMENT DESIGNATION:	PRIMARY SWITCH "A"
JOB LOCATION:	ALBANY NY	EQUIPMENT TYPE:	MASTERCLAD SWITCHGEAR
DRAWN BY:	CAD	DRAWING TYPE:	ONE LINE DIAGRAM
ENGR:	VAN N. NGUYEN		SQUARE D Schneider Electric
DATE:	FEBRUARY 02, 2006		
DRAWING STATUS:	RECORD	DWG# 021295878-003-01	PG 1 OF 1 REV D

REV	DESCRIPTION	BY	DATE								
				B	REV. MAIN A, MAIN B, TIE B ARE N.C., TIE A N.O	VN	06/05/06	–	----	--	--/--/--
A	CHANGE TO ELECTRICAL INTERLOCK	VN	05/17/06	–	----	--	--/--/--	–	----	--	--/--/--

NOTE: KEY DESIGNATION A1 IS SHOWN FOR EXAMPLE ONLY. REFER TO THE SINGLE LINE DIAGRAM FOR THE ACTUAL DESIGNATION EMPLOYED ON THE EQUIPMENT.

LEGEND:
- LC – DEVICE IS TO BE LOCKED CLOSED.
- LO – DEVICE IS TO BE LOCKED OPEN.
- LOC – DEVICE IS TO BE LOCKED OPEN OR CLOSED.
- ⦶ – INDICATES LOCK CYLINDER WHERE KEY IS NORMALLY HELD.

PURPOSE:

TO PREVENT PARALLEL CONNECTION OF LINES A AND B WHEN CLOSING THE TIE BREAKERS IN ORDER TO TRANSFER A LOAD FROM ONE MAIN BREAKER TO THE OTHER.

NORMAL OPERATING CONDITION:

THE MAIN BREAKERS "A", "B" ARE CLOSED TO SUPPLY POWER TO THEIR RESPECTIVE LOADS.
TIE BREAKER "A" IS OPEN.
TIE BREAKER "A" IS CLOSED.
ELECTRICAL INTERLOCK PREVENTS CLOSURE OF TIE BREAKER "A" WITH MAIN BREAKERS "A" CLOSED

SEQUENCE OF OPERATION:

A) NORMAL POWER A FAILURE, NORMAL POWER B AVAILABLE:
1) OPEN MAIN BREAKER "A".
2) CLOSE TIE "A" BREAKER AFTER TIME DELAY (UP TO 60 SECONDS), DEFAULT SET UP 10 SECONDS

NORMAL POWER A RESTORE, NORMAL POWER B AVAILABLE:
1) OPEN TIE BREAKER "A"
2) CLOSE MAIN BREAKER "A" AFTER TIME DELAY (UP TO 60 SECONDS), DEFAULT SET UP 10 SECONDS.

B) NORMAL POWER B FAILURE, NORMAL POWER A AVAILABLE:
1) OPEN MAIN BREAKER "B".
2) CLOSE TIE "A" BREAKER AFTER TIME DELAY (UP TO 60 SECONDS), DEFAULT SET UP 10 SECONDS

NORMAL POWER B RESTORE, NORMAL POWER A AVAILABLE:
1) OPEN TIE BREAKER "A".
2) CLOSE MAIN BREAKER "B" AFTER TIME DELAY (UP TO 60 SECONDS), DEFAULT SET UP 10 SECONDS.

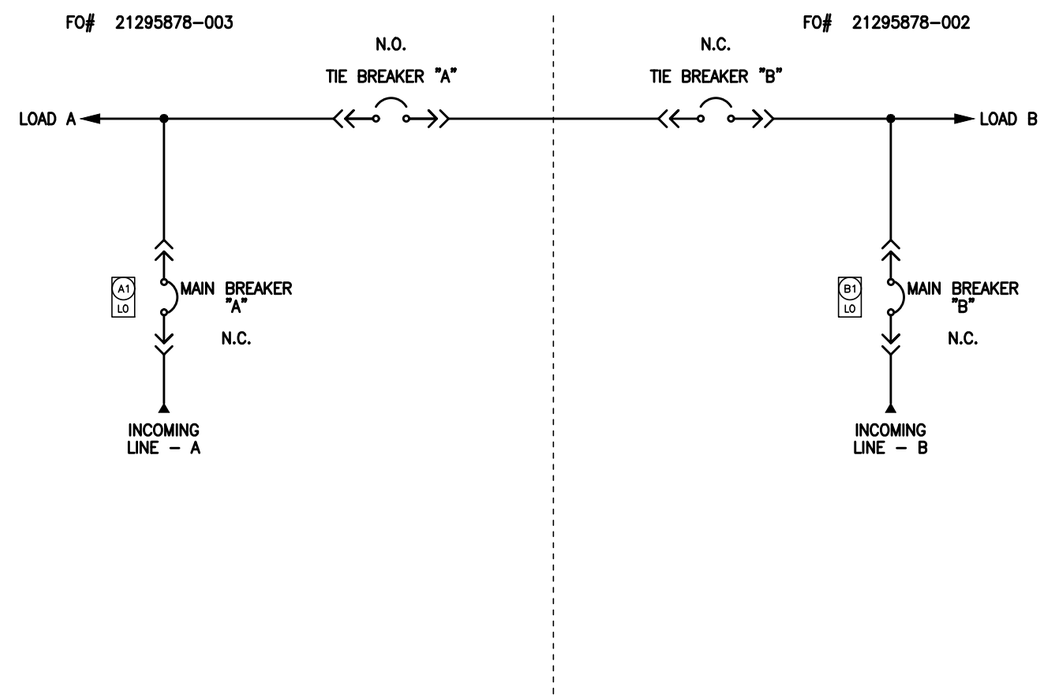

APPLICATION STANDARD DRAWING

ELECTRICAL INTERLOCK SCHEME – METAL–CLAD MAIN–TIE–TIE–MAIN

JOB NAME:	BUILDING #22 RENOVATIONS	EQUIPMENT DESIGNATION:	PRIMARY SWITCH "A"
JOB LOCATION:	ALBANY NY	EQUIPMENT TYPE:	MASTERCLAD SWITCHGEAR
DRAWN BY:	CAD	DRAWING TYPE:	ELECTRICAL INTERLOCK SCHEME
ENGR:	VAN N. NGUYEN		SQUARE D Schneider Electric
DATE:	FEBRUARY 02, 2006		
DRAWING STATUS:	RECORD	DWG# K21295878–003–01	PG 1 OF 1 REV B

REV	DESCRIPTION	BY	DATE										
A	ADD 750 RELAY	VN	05/15/06	B	ADD 86 LOCKOUT CONTACTS	VN	06/05/06	D	MODIFY FOR CLOSED TRANSITION	VN	11/28/07
				C	REVISE FOR AUTOWIRE.	JR	06/30/06	–	----	--	--/--/--

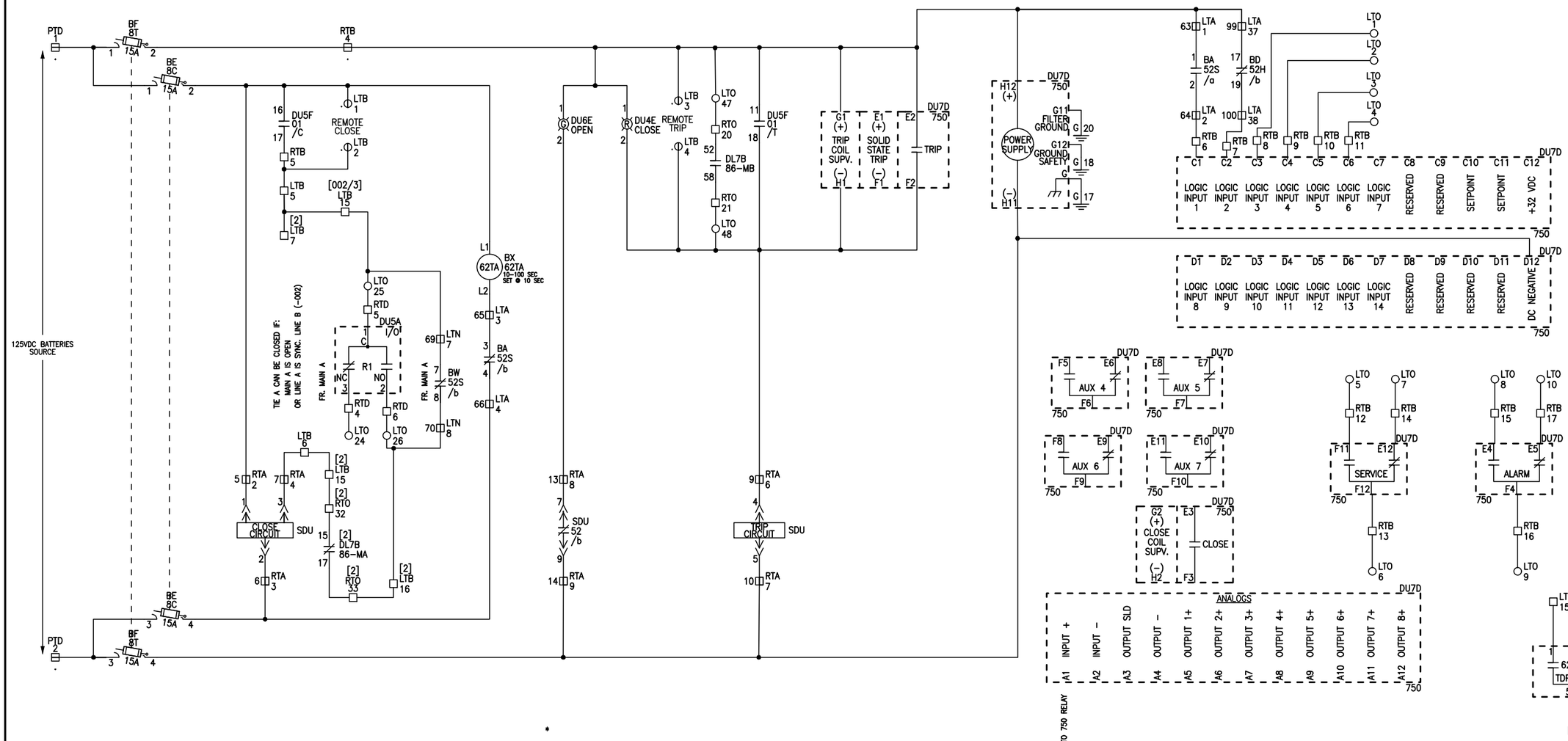

REFERENCE DWG:C21295878-002-03 P1

STATIONARY SWITCH CONTACTS (MOC-10)

LTA= SPARE CONTACT WIRED TO CUSTOMER TERMINAL BLOCK

AUXILIARY CONTACTS
* = USED CONTACT
NOTE 1 = OPTIONAL CIRCUITS NOT SUPPLIED WITH BREAKER

HOUSING SWITCH CONTACTS (TOC-10)
(SHOWN WITH BREAKER IN TEST OR WITHDRAWN POSITION)
LTA= SPARE CONTACT WIRED TO CUSTOMER TERMINAL BLOCK

TIE A
SECTION 1 UPPER

JOB NAME:	BUILDING #22 RENOVATIONS	EQUIPMENT DESIGNATION:	PRIMARY SWITCH "A"
JOB LOCATION:	ALBANY NY	EQUIPMENT TYPE:	MASTERCLAD SWITCHGEAR
DRAWN BY:	CAD	DRAWING TYPE:	CONTROL SCHEMATIC
ENGR:	VAN N. NGUYEN		SQUARE D COMPANY Schneider Electric
DATE:	FEBRUARY 02, 2006		
DRAWING STATUS:	RECORD	DWG# C21295878-003-01	PG 1 OF 1 REV D

REV	DESCRIPTION	BY	DATE										
A	ADD ELECTRICAL INTERLOCK WITH TIE A & TIE B	VN	05/15/06	B	ADD DEV. 86	VN	06/05/06	D	MODIFY FOR CLOSE TRANSITION	VN	11/28/07
				C	REVISE FOR AUTOWIRE.	JR	06/30/06	–	----	--	--/--/--

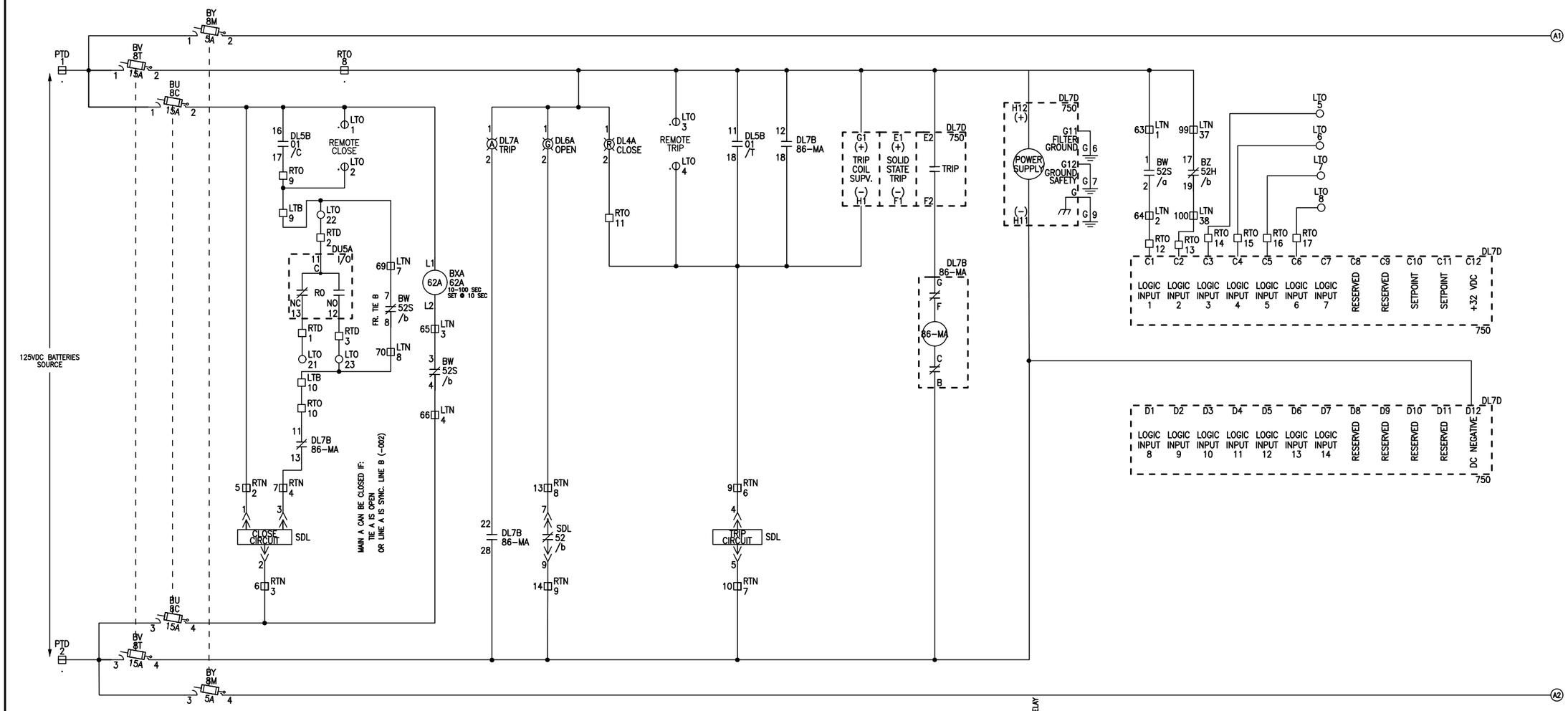

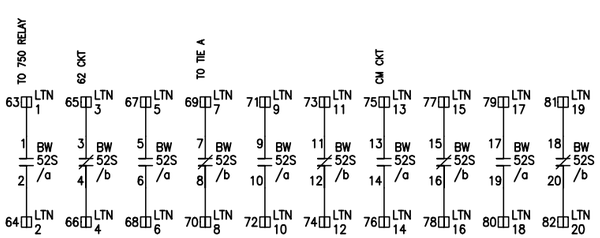

STATIONARY SWITCH CONTACTS (MOC-10)

◫ LTN= SPARE CONTACT WIRED TO CUSTOMER TERMINAL BLOCK

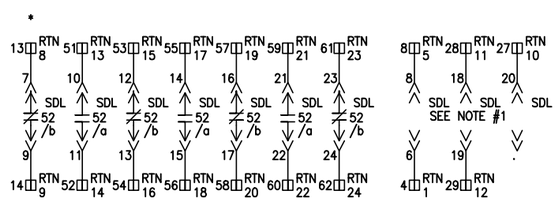

AUXILIARY CONTACTS

* = USED CONTACT

NOTE 1 = OPTIONAL CIRCUITS NOT SUPPLIED WITH BREAKER

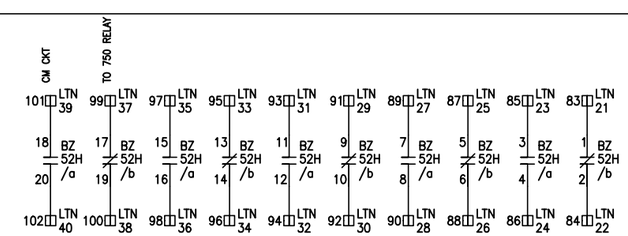

HOUSING SWITCH CONTACTS (TOC-10)

(SHOWN WITH BREAKER IN TEST OR WITHDRAWN POSITION)

◫ LTN= SPARE CONTACT WIRED TO CUSTOMER TERMINAL BLOCK

MAIN A
SECTION 2 LOWER

JOB NAME:	BUILDING #22 RENOVATIONS	EQUIPMENT DESIGNATION:	PRIMARY SWITCH "A"
JOB LOCATION:	ALBANY NY	EQUIPMENT TYPE:	MASTERCLAD SWITCHGEAR
DRAWN BY:	CAD	DRAWING TYPE:	CONTROL SCHEMATIC
ENGR:	VAN N. NGUYEN		SQUARE D COMPANY Schneider Electric
DATE:	FEBRUARY 02, 2006		
DRAWING STATUS:	RECORD	DWG# C21295878-003-02	PG 1 OF 2 REV D

REV	DESCRIPTION	BY	DATE									
B	750 RELAY, SYNC. MAIN A & TIE A CONTACTS	VN	11/28/07	–	----							
A	REVISE FOR AUTOWIRE.	JR	6/30/06	–	----	--	--/--/--	–	----	--	--/--/--	

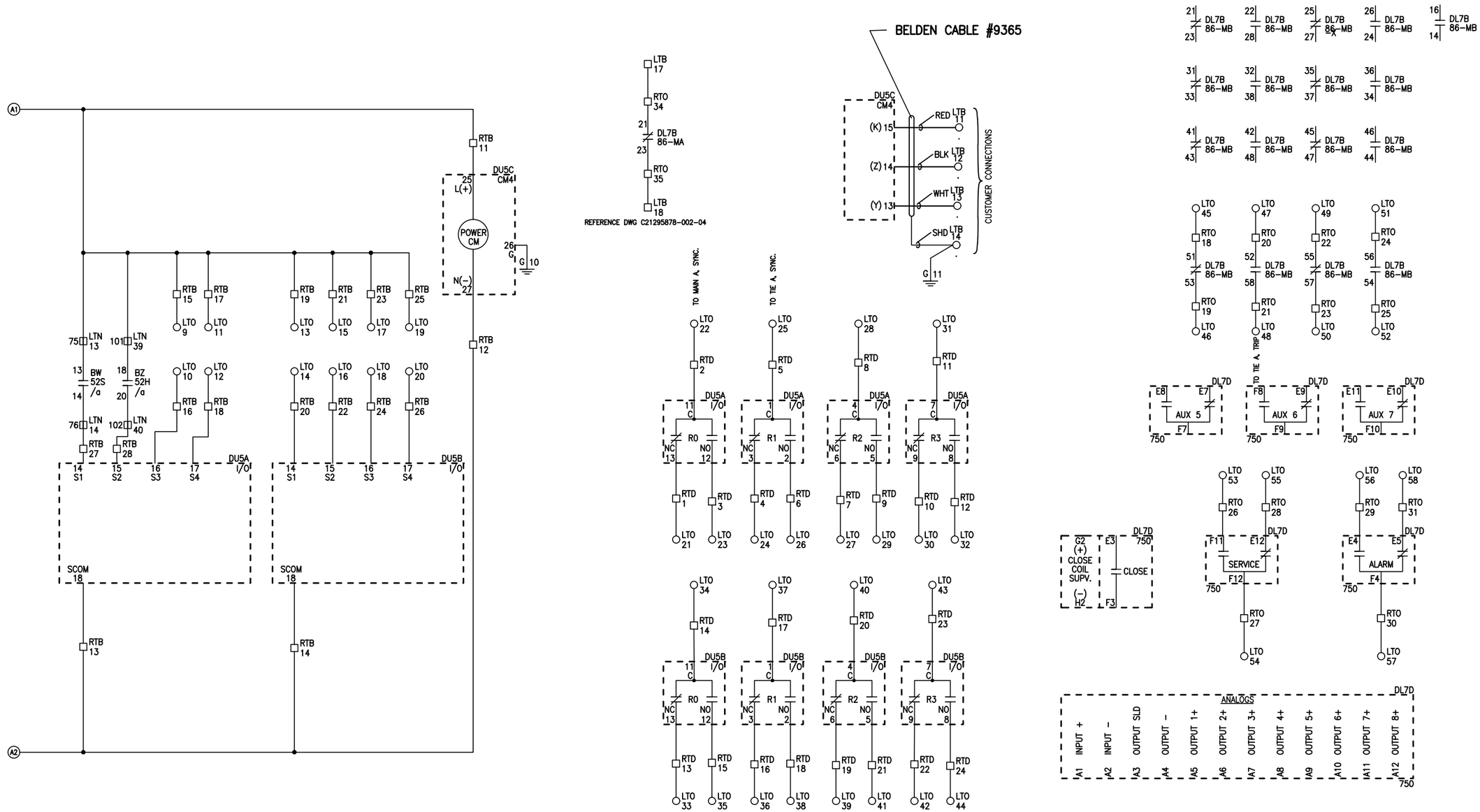

MAIN A
SECTION 2 LOWER

JOB NAME:	BUILDING #22 RENOVATIONS	EQUIPMENT DESIGNATION:	PRIMARY SWITCH "A"
JOB LOCATION:	ALBANY NY	EQUIPMENT TYPE:	MASTERCLAD SWITCHGEAR
DRAWN BY:	CAD	DRAWING TYPE:	CONTROL SCHEMATIC
ENGR:	VAN N. NGUYEN		SQUARE D COMPANY Schneider Electric
DATE:	FEBRUARY 02, 2006		
DRAWING STATUS:	RECORD	DWG# C21295878-003-02	PG 2 OF 2 REV B

REV	DESCRIPTION	BY	DATE								
A	REVISE FOR AUTOWIRE.	JR	06/30/06	–	----	--	--/--/--	–	----	--	--/--/--

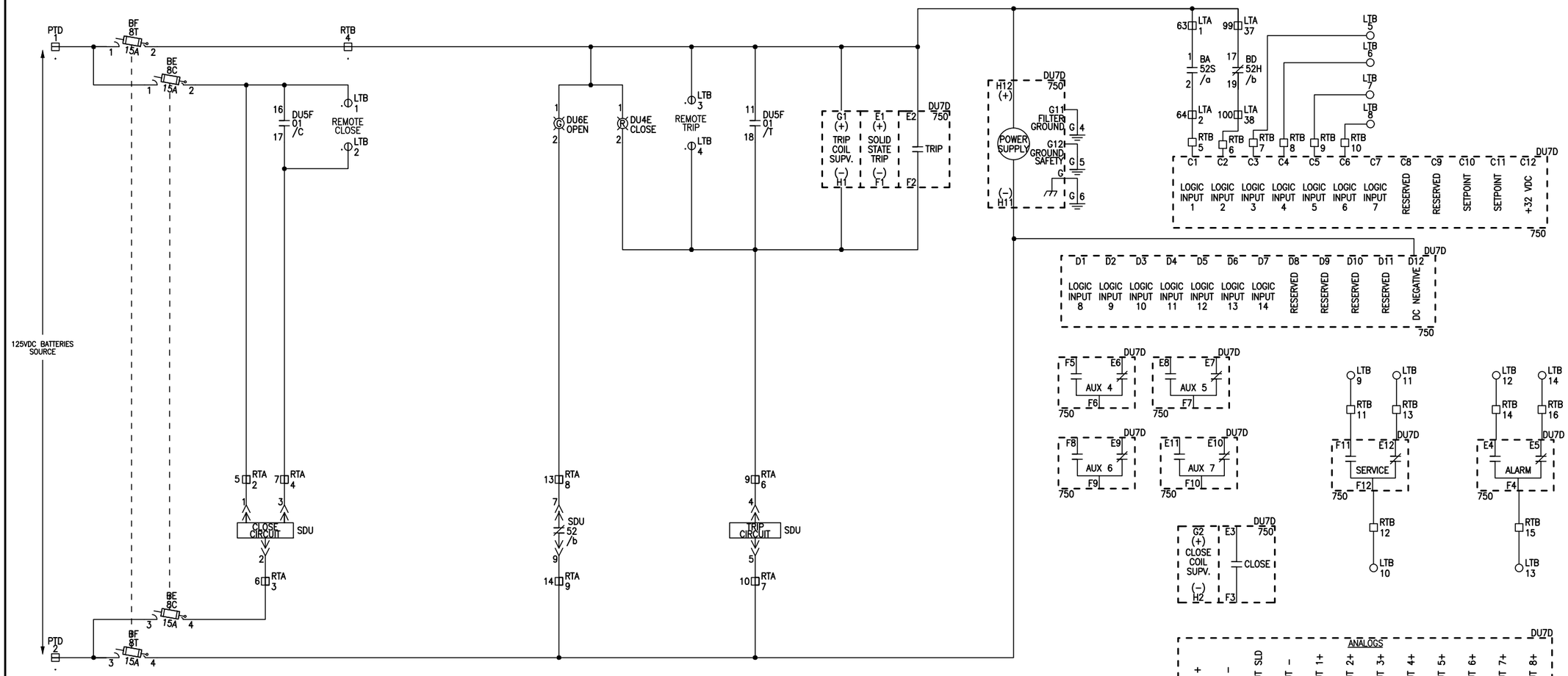

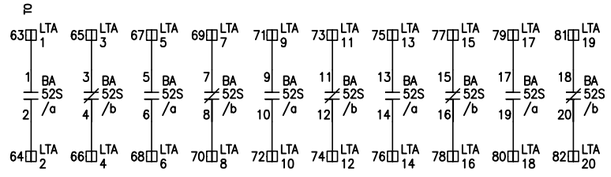

STATIONARY SWITCH CONTACTS (MOC–10)

◫ LTA= SPARE CONTACT WIRED TO CUSTOMER TERMINAL BLOCK

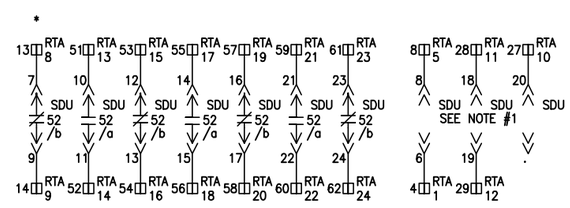

AUXILIARY CONTACTS

* = USED CONTACT

NOTE 1 = OPTIONAL CIRCUITS NOT SUPPLIED WITH BREAKER

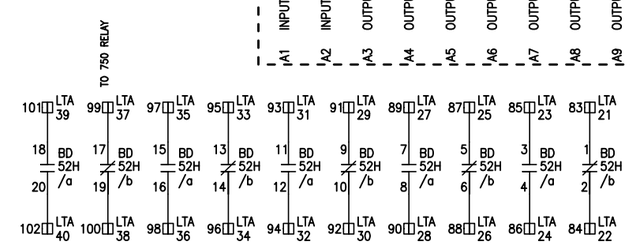

HOUSING SWITCH CONTACTS (TOC–10)

(SHOWN WITH BREAKER IN TEST OR WITHDRAWN POSITION)

◫ LTA= SPARE CONTACT WIRED TO CUSTOMER TERMINAL BLOCK

FEEDER SECTION 3 UPPER

JOB NAME:	BUILDING #22 RENOVATIONS	EQUIPMENT DESIGNATION:	PRIMARY SWITCH "A"
JOB LOCATION:	ALBANY NY	EQUIPMENT TYPE:	MASTERCLAD SWITCHGEAR
DRAWN BY:	CAD	DRAWING TYPE:	CONTROL SCHEMATIC
ENGR:	VAN N. NGUYEN		SQUARE D COMPANY Schneider Electric
DATE:	FEBRUARY 02, 2006		
DRAWING STATUS:	RECORD	DWG# C21295878–003–03	PG 1 OF 2 REV A

REV	DESCRIPTION	BY	DATE	B	REVISED WIRE NOTES	SP	12/18/06	–	----	--	--/--/--
A	REVISE FOR AUTOWIRE.	JR	06/30/06	–	----	--	--/--/--	–	----	--	--/--/--

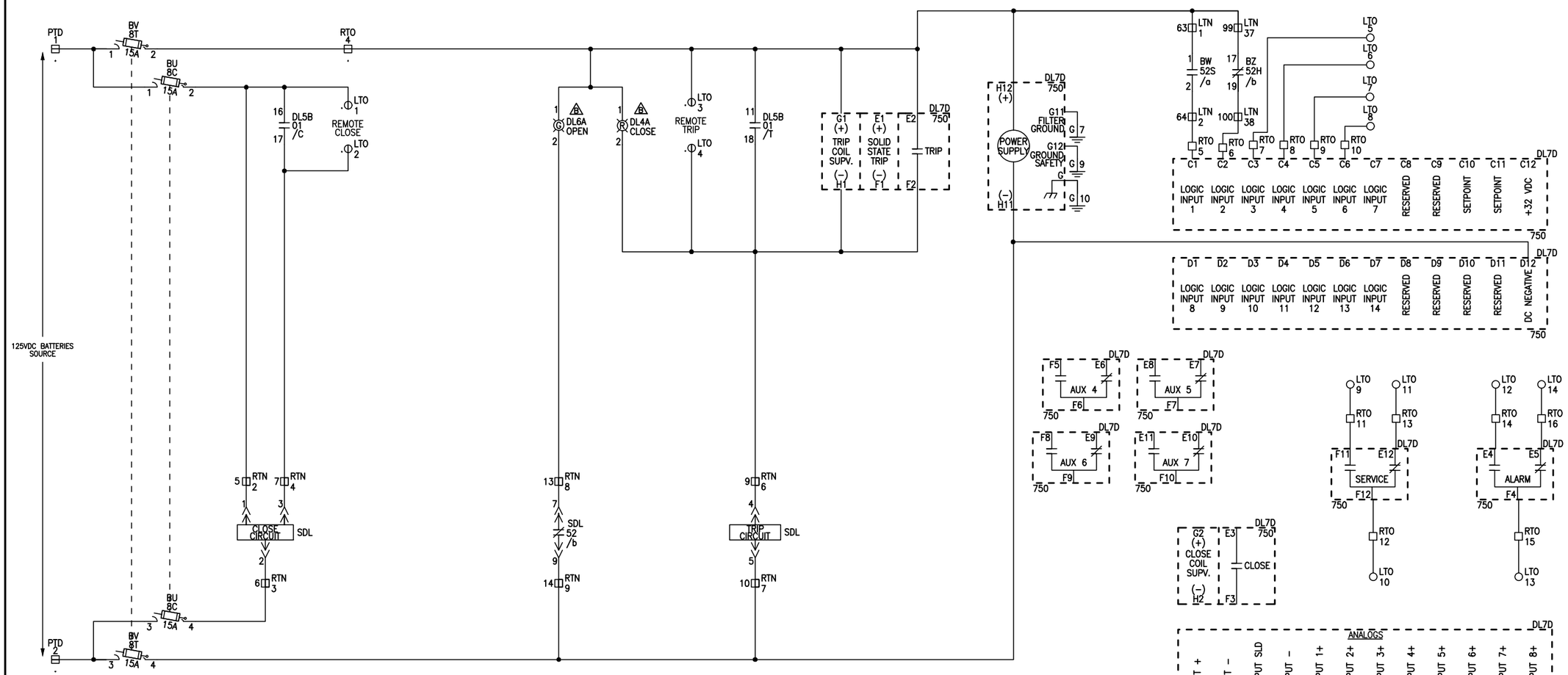

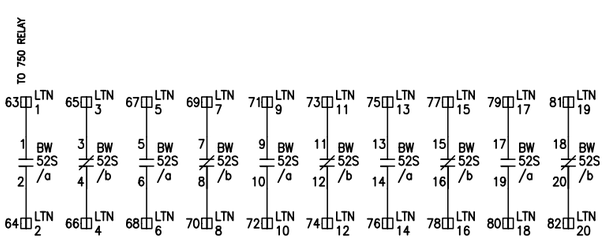

STATIONARY SWITCH CONTACTS (MOC–10)

◫ LTN= SPARE CONTACT WIRED TO CUSTOMER TERMINAL BLOCK

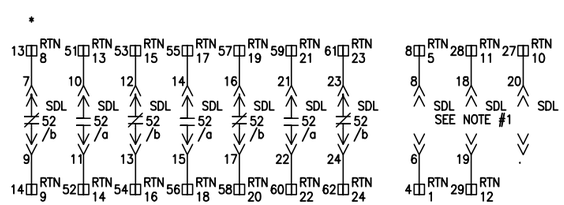

AUXILIARY CONTACTS

* = USED CONTACT

NOTE 1 = OPTIONAL CIRCUITS NOT SUPPLIED WITH BREAKER

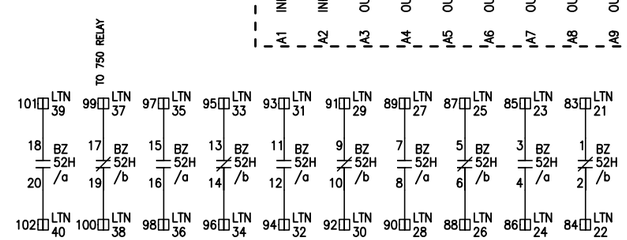

HOUSING SWITCH CONTACTS (TOC–10)

(SHOWN WITH BREAKER IN TEST OR WITHDRAWN POSITION)

◫ LTN= SPARE CONTACT WIRED TO CUSTOMER TERMINAL BLOCK

FEEDER SECTION 3 LOWER

JOB NAME:	BUILDING #22 RENOVATIONS	EQUIPMENT DESIGNATION:	PRIMARY SWITCH "A"
JOB LOCATION:	ALBANY NY	EQUIPMENT TYPE:	MASTERCLAD SWITCHGEAR
DRAWN BY:	CAD	DRAWING TYPE:	CONTROL SCHEMATIC
ENGR:	VAN N. NGUYEN		SQUARE D COMPANY Schneider Electric
DATE:	FEBRUARY 02, 2006		
DRAWING STATUS:	RECORD	DWG#	C21295878-003-03 PG 2 OF 2 REV B

REV	DESCRIPTION	BY	DATE								
A	REVISE FOR AUTOWIRE.	JR	06/29/06	B	REVISED WIRE NOTES	SP	12/18/06	–	----	--	--/--/--
				–	----	--	--/--/--	–	----	--	--/--/--

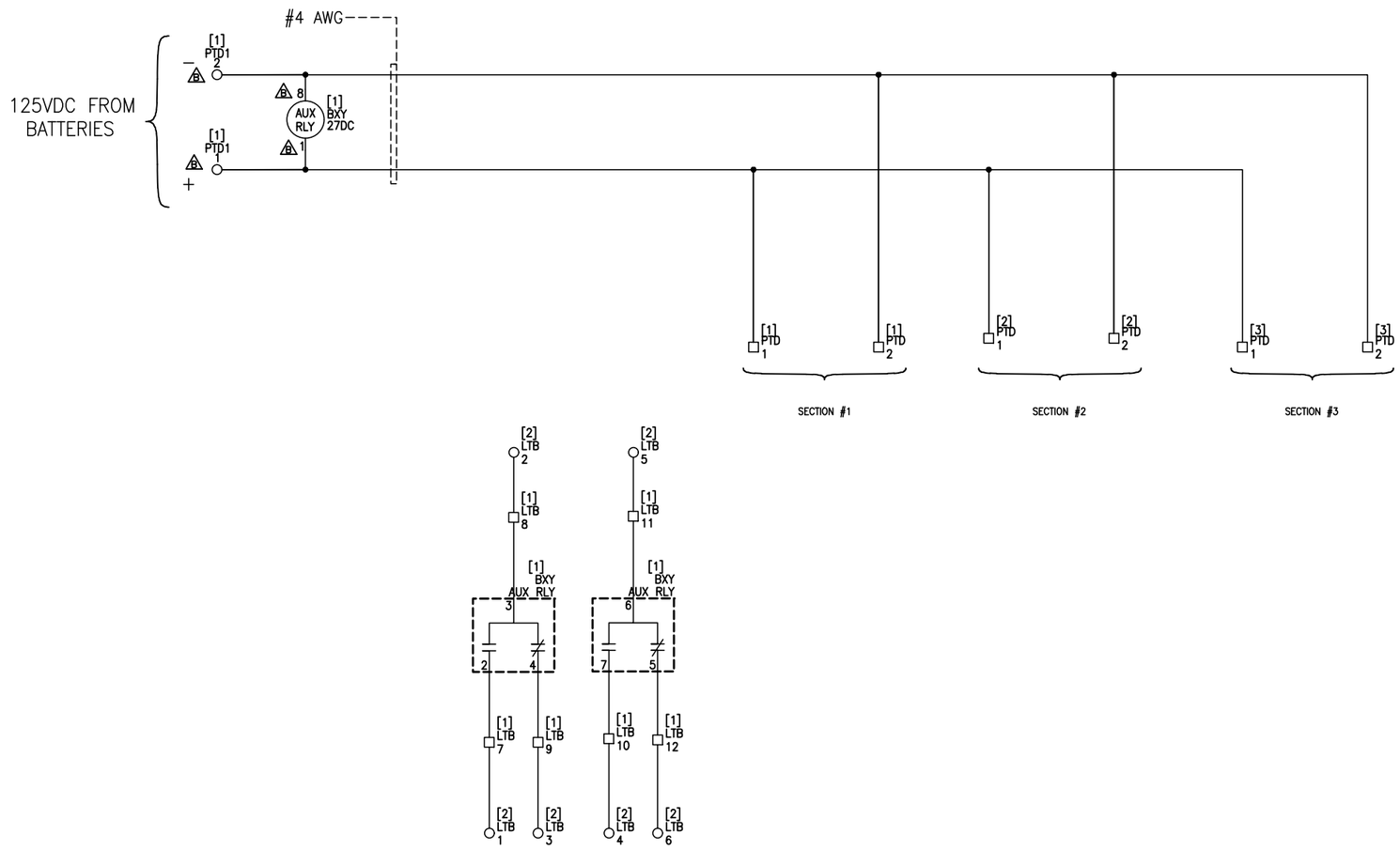

125VDC VOLTAGE SENSOR RELAY
PICK-UP 92-140VDC
DROP-OUT 90-138VDC

JOB NAME:	BUILDING #22 RENOVATIONS	EQUIPMENT DESIGNATION:	PRIMARY SWITCH "A"
JOB LOCATION:	ALBANY NY	EQUIPMENT TYPE:	MASTERCLAD SWITCHGEAR
DRAWN BY:	CAD	DRAWING TYPE:	CONTROL SCHEMATIC
ENGR:	VAN N. NGUYEN		SQUARE D COMPANY Schneider Electric
DATE:	JUNE 30, 2006		
DRAWING STATUS:	RECORD	DWG# C21295878-003-AL	PG 1 OF 1 REV B

REV	DESCRIPTION	BY	DATE								
A	ADD COMM. CM4000	VNN	05/16/06	–	----	--	--/--/--	–	----	--	--/--/--

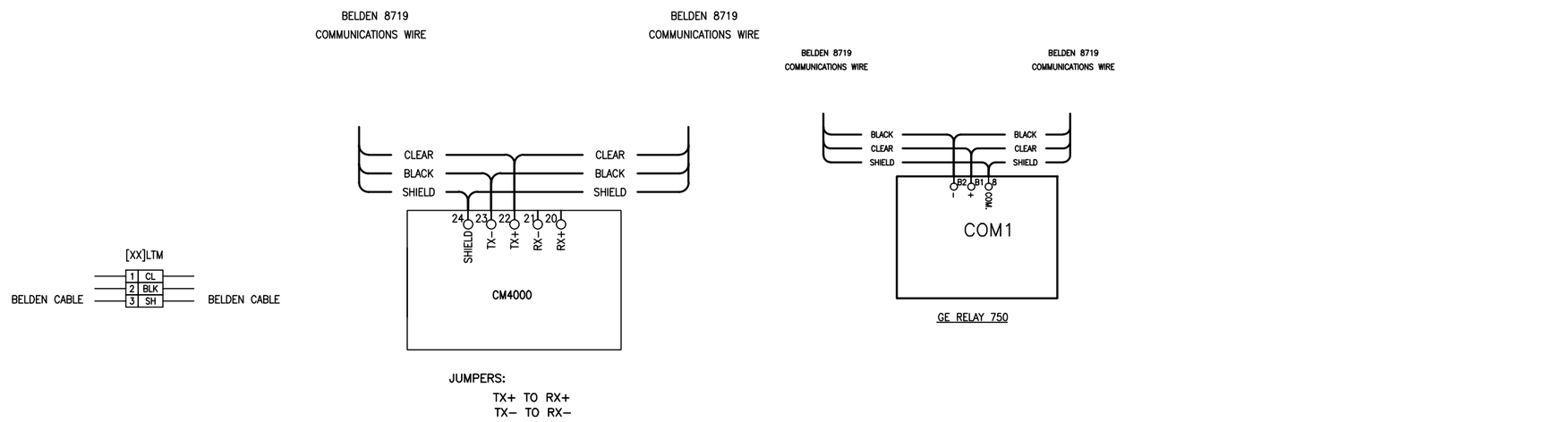

[XX] = SECTION NUMBERS

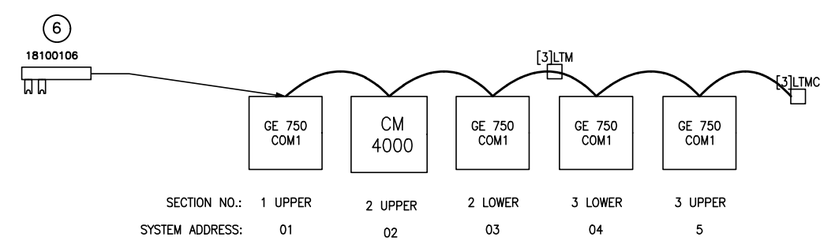

JOB NAME:	BUILDING #22 RENOVATIONS	EQUIPMENT DESIGNATION:	PRIMARY SWITCH "A"
JOB LOCATION:	ALBANY NY	EQUIPMENT TYPE:	MASTERCLAD SWITCHGEAR
DRAWN BY:	CAD	DRAWING TYPE:	COMMUNICATION SCHEMATIC
ENGR:	VAN N. NGUYEN		SQUARE D COMPANY Schneider Electric
DATE:	FEBRUARY 02, 2006		
DRAWING STATUS:	RECORD	DWG# C21295878-003-CM	PG 1 OF 1 REV A

REV	DESCRIPTION	BY	DATE	—	----	--	--/--	—	----	--	--/--
—	----	--	--/--	—	----	--	--/--	—	----	--	--/--

SYMBOL KEY

ZAN=ANSI DEVICE FUNCTION/TERMINAL NUMBER PER ANSI C37.02/.11 OR CUSTOMER ASSIGNED DESIGNATION

ZDN=DEVICE WIRING DESIGNATION (ASSIGNED BY SQUARE D)

ZTN=DEVICE ACTUAL TERMINAL NUMBER

LEGEND

G	GREEN PILOT LIGHT
R	RED PILOT LIGHT
01	CONTROL SWITCH
LTA/N	CUSTOMER TERMINAL BLOCK
LTI	MAIN INTERCONNECTION TERM. BLOCK
PTA	3 POLE AC POWER TERMINAL BLOCK
PTD	2 POLE DC POWER TERMINAL BLOCK
RTA/N	BREAKER TERMINAL BLOCK
RT*	TERMINAL BLOCK
SDU/L	SECONDARY DISCONNECT
52/a	AUXILIARY CONTACT, OPEN WHEN BREAKER OPEN
52/b	AUXILIARY CONTACT, CLOSED WHEN BREAKER OPEN
52S	MECHANISM OPERATED (STATIONARY) CONTACT
52H	TRUCK OPERATED (HOUSING) CONTACT
LA	LIGHTNING ARRESTER
SCTB	SHORTING CURRENT TERMINAL BLOCK
8C	CLOSE CIRCUIT DISCONNECT
8T	TRIP CIRCUIT DISCONNECT
SEPAM	OVERCURRENT RELAY

DXXX
01

CONTACTS	DECK	POSITIONS		
		TRIP	NORMAL	CLOSE
11 — 18	1	x		
16 — 17				x

DXXX
86

DECK	CONTACT	86– CONTACTS	POSITION TRIP	POSITION RESET
1	1	11 — 13		X
	2	12 — 18	X	
	3	15 — 17		X
	4	16 — 14	X	
2	5	21 — 23		X
	6	22 — 28	X	
	7	25 — 27		X
	8	26 — 24	X	
3	9	31 — 33		X
	10	32 — 38	X	
	11	35 — 37		X
	12	36 — 34	X	
4	13	41 — 43		X
	14	42 — 48	X	
	15	45 — 47		X
	16	46 — 44	X	
5	17	51 — 53		X
	18	52 — 58	X	
	19	55 — 57		X
	20	56 — 54	X	

LEGENDS AND DEVELOPMENTS

JOB NAME:	BUILDING #22 RENOVATIONS	EQUIPMENT DESIGNATION:	PRIMARY SWITCH "A"
JOB LOCATION:	ALBANY NY	EQUIPMENT TYPE:	MASTERCLAD SWITCHGEAR
DRAWN BY:	CAD	DRAWING TYPE:	INFORMATION
ENGR:	VAN N. NGUYEN		SQUARE D COMPANY Schneider Electric
DATE:	FEBRUARY 02, 2006		
DRAWING STATUS:	RECORD	DWG# C21295878-003-IF	PG 1 OF 1 REV —

REV	DESCRIPTION	BY	DATE								
–	----	--	--/--/--	–	----	--	--/--/--	–	----	--	--/--/--
				–	----	--	--/--/--	–	----	--	--/--/--

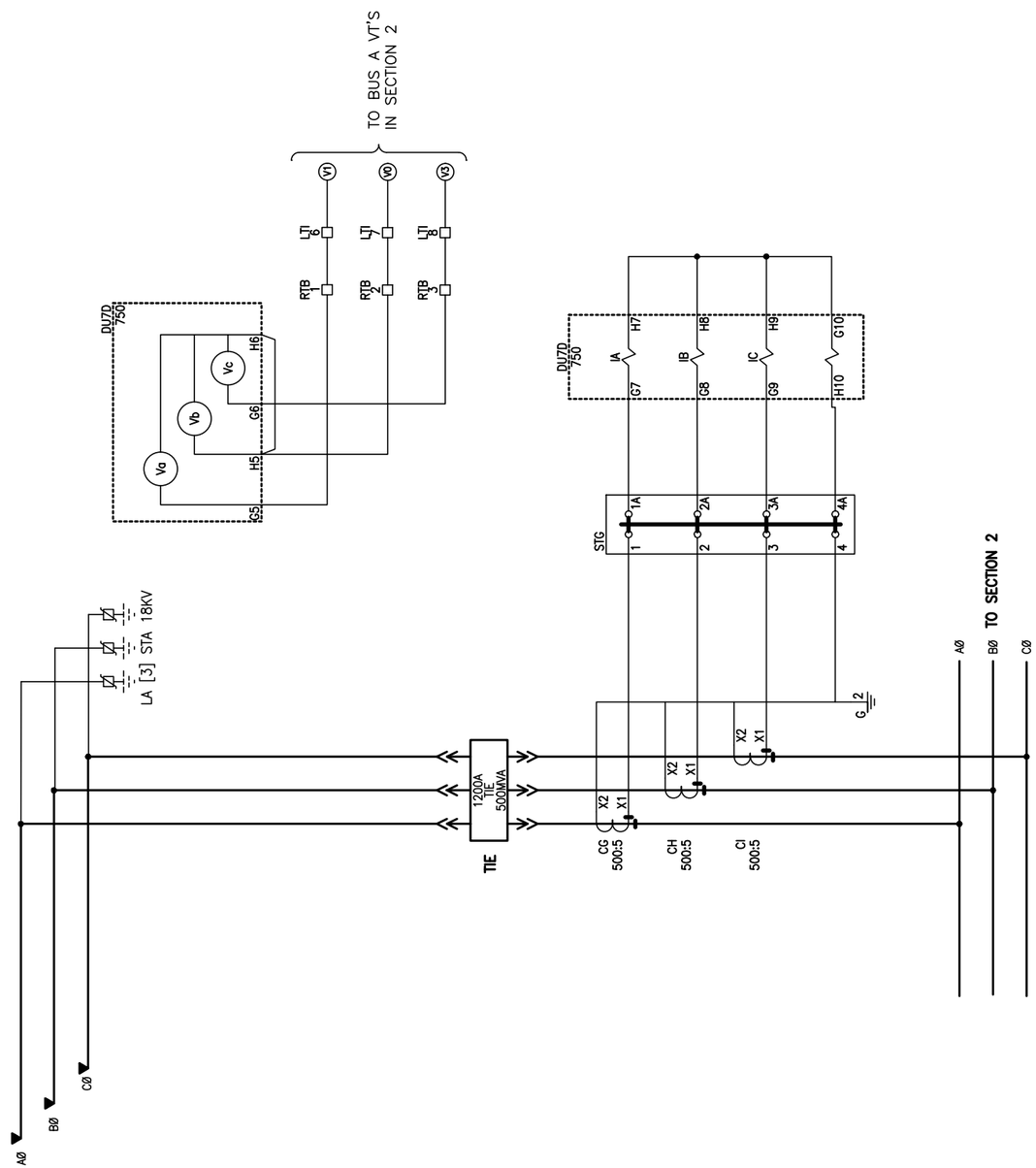

SECTION 1

JOB NAME:	BUILDING #22 RENOVATIONS	EQUIPMENT DESIGNATION:	PRIMARY SWITCH "A"
JOB LOCATION:	ALBANY, NY	EQUIPMENT TYPE:	MASTERCLAD SWITCHGEAR
DRAWN BY:	J.RUSH	DRAWING TYPE:	ELEMENTARY DIAGRAMS
ENGR:	VAN N. NGUYEN		SQUARE D Schneider Electric
DATE:	JUNE 30, 2006		
DRAWING STATUS:	RECORD	DWG# E21295878-003-01	PG 1 OF 1 REV –

REV	DESCRIPTION	BY	DATE								
–	----	--	--/--/--	–	----	--	--/--/--	–	----	--	--/--/--

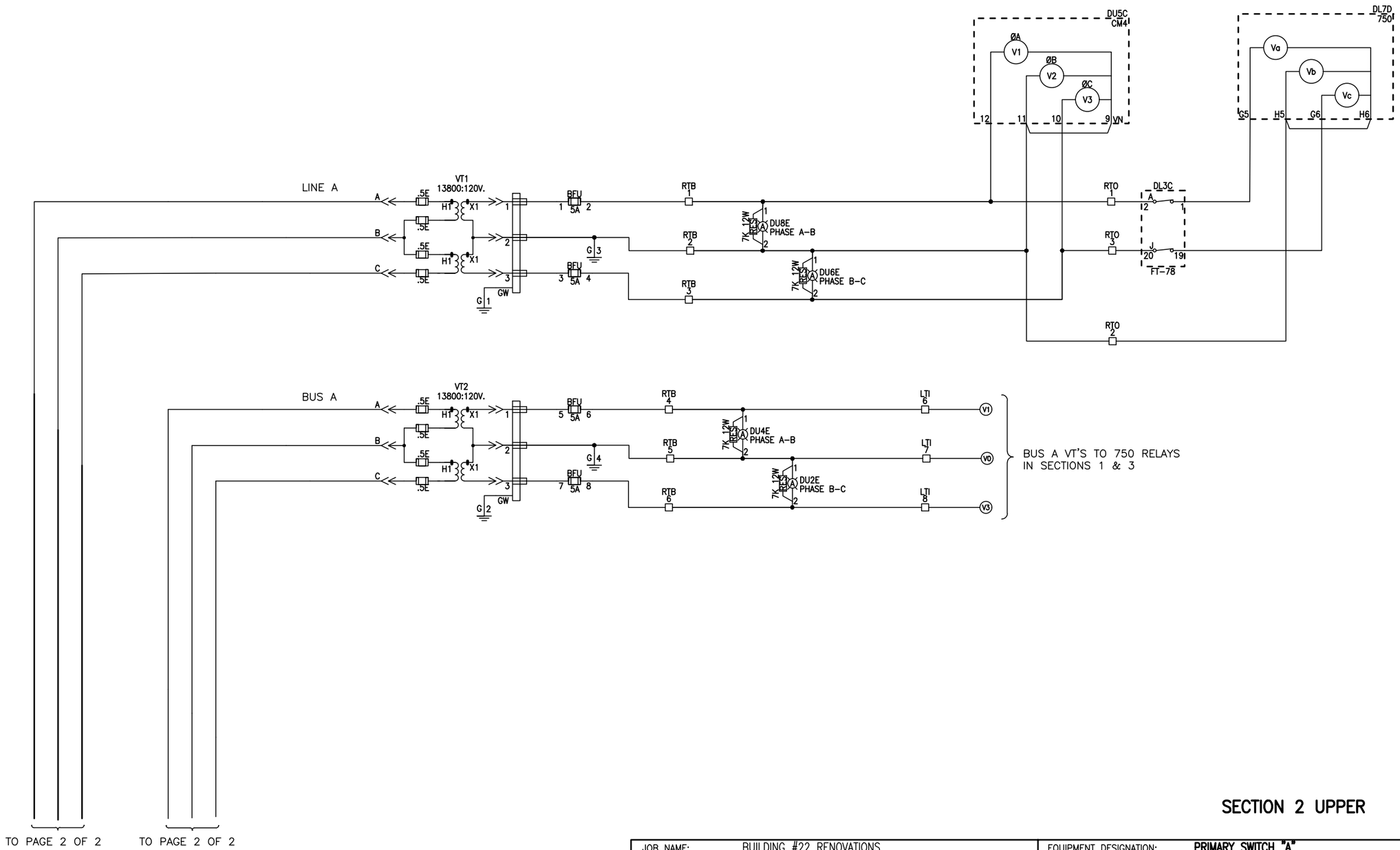

SECTION 2 UPPER

JOB NAME:	BUILDING #22 RENOVATIONS	EQUIPMENT DESIGNATION:	PRIMARY SWITCH "A"
JOB LOCATION:	ALBANY, NY	EQUIPMENT TYPE:	MASTERCLAD SWITCHGEAR
DRAWN BY:	J.RUSH	DRAWING TYPE:	THREE LINE DIAGRAM
ENGR:	VAN N. NGUYEN		SQUARE D COMPANY Schneider Electric
DATE:	JUNE 30, 2006		
DRAWING STATUS:	RECORD	DWG# E21295878-003-02	PG 1 OF 2 REV —

REV	DESCRIPTION	BY	DATE								
–	----	--	--/--/--	–	----	--	--/--/--	–	----	--	--/--/--

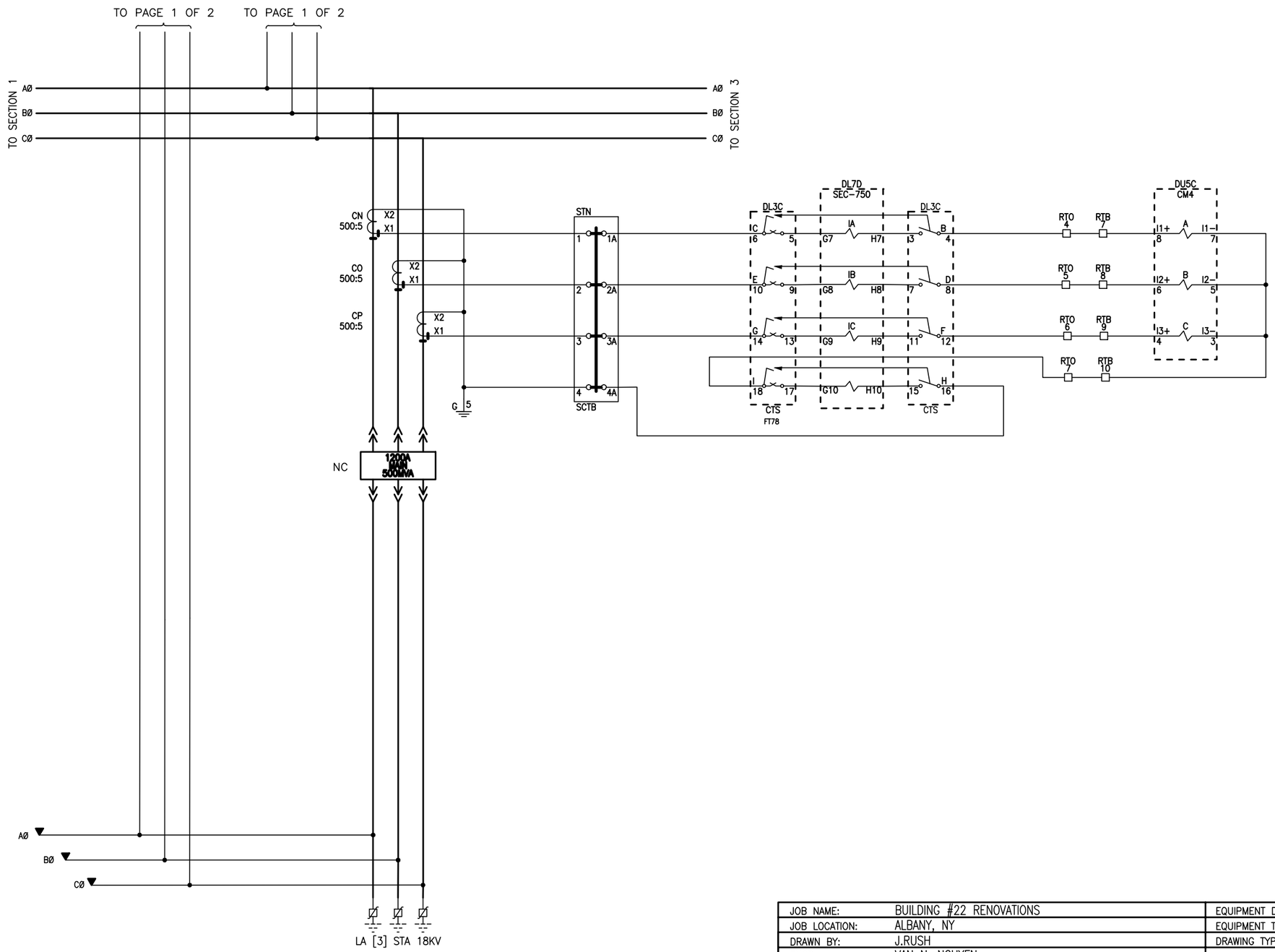

SECTION 2 LOWER

JOB NAME:	BUILDING #22 RENOVATIONS	EQUIPMENT DESIGNATION:	PRIMARY SWITCH "A"
JOB LOCATION:	ALBANY, NY	EQUIPMENT TYPE:	MASTERCLAD SWITCHGEAR
DRAWN BY:	J.RUSH	DRAWING TYPE:	THREE LINE DIAGRAM
ENGR:	VAN N. NGUYEN	SQUARE D COMPANY Schneider Electric	
DATE:	JUNE 30, 2006		
DRAWING STATUS:	RECORD	DWG# E21295878-003-02	PG 2 OF 2 REV –

REV	DESCRIPTION	BY	DATE								
–	----	--	--/--/--	–	----	--	--/--/--	–	----	--	--/--/--
				–	----	--	--/--/--	–	----	--	--/--/--

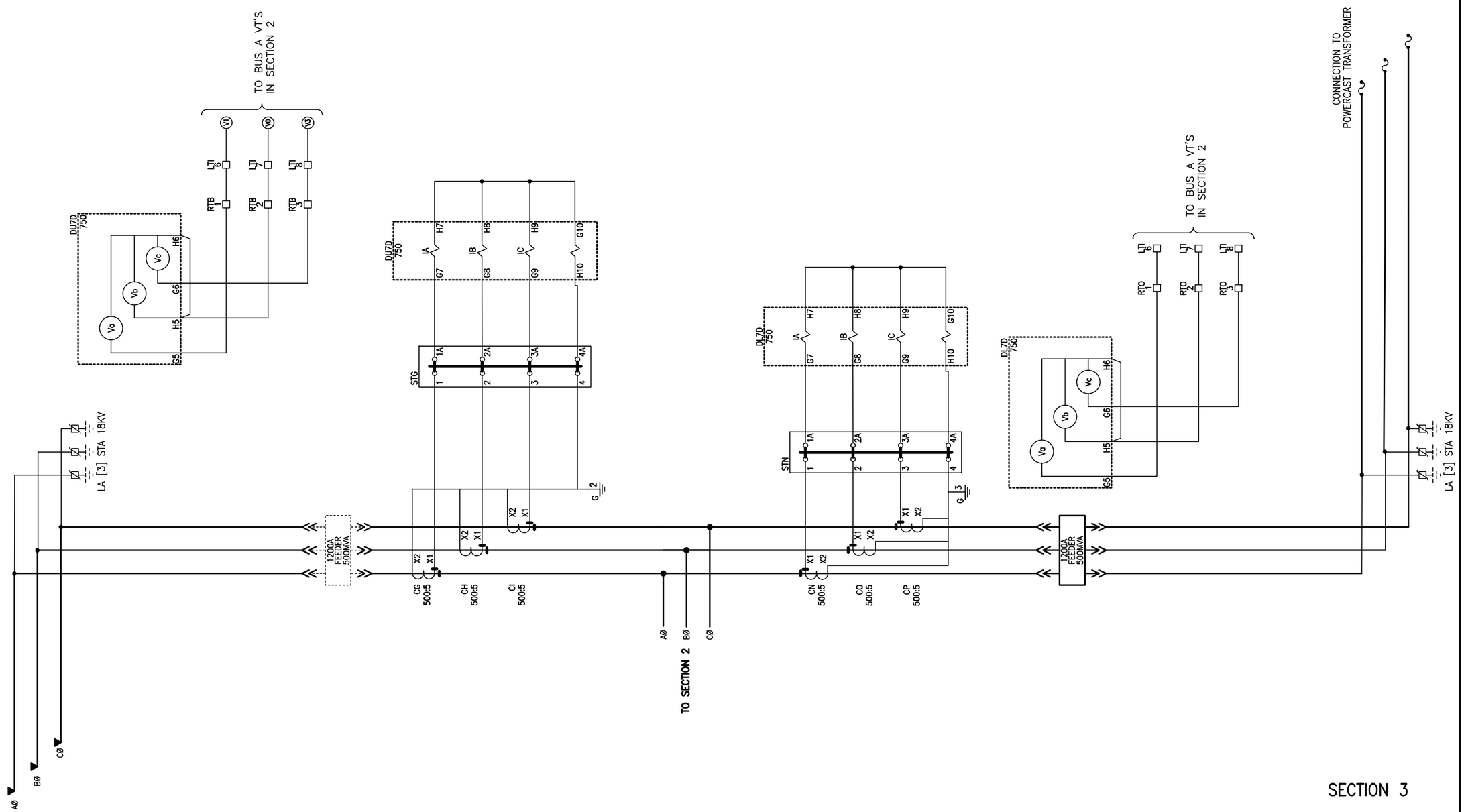

SECTION 3

JOB NAME:	BUILDING #22 RENOVATIONS	EQUIPMENT DESIGNATION:	PRIMARY SWITCH "A"
JOB LOCATION:	ALBANY, NY	EQUIPMENT TYPE:	MASTERCLAD SWITCHGEAR
DRAWN BY:	J.RUSH	DRAWING TYPE:	ELEMENTARY DIAGRAMS
ENGR:	VAN N. NGUYEN		SQUARE D Schneider Electric
DATE:	JUNE 30, 2006		
DRAWING STATUS:	RECORD	DWG# E21295878-003-03	PG 1 OF 1 REV –

WIRE ROUTING EXAMPLE

1=BA-1,BD-2#SIZE

- NON-STANDARD WIRE SIZE
- DESTINATION PIN NUMBER
- SECOND DESTINATION
- DESTINATION PIN NUMBER
- FIRST DESTINATION
- DEVICE TERMINAL NUMBER

ITEM NUMBER-SEE ELECTRICAL BILL OF MATERIAL

REV	DESCRIPTION	BY	DATE
A	ADD WIRING NOTE	SP	12/18/06

BA

1=LTA-1	11=LTA-11
2=LTA-2	12=LTA-12
3=LTA-3	13=LTA-13
4=LTA-4	14=LTA-14
5=LTA-5	15=LTA-15
6=LTA-6	16=LTA-16
7=LTA-7	17=LTA-17
8=LTA-8	18=LTA-19
9=LTA-9	19=LTA-18
10=LTA-10	20=LTA-20

41 — 52S: 1 3 5 7 9 11 13 15 17 18 / 2 4 6 8 10 12 14 16 19 20

BD

1=LTA-21	11=LTA-31
2=LTA-22	12=LTA-32
3=LTA-23	13=LTA-33
4=LTA-24	14=LTA-34
5=LTA-25	15=LTA-35
6=LTA-26	16=LTA-36
7=LTA-27	17=LTA-37
8=LTA-28	18=LTA-39
9=LTA-29	19=LTA-38
10=LTA-30	20=LTA-40

42 — 52H: 18 17 15 13 11 9 7 5 3 1 / 20 19 16 14 12 10 8 6 4 2

RTA

SDU-6	1	4	
SDU-1	2	5	DU5F-16,BE-2
SDU-2	3	6	BE-4
SDU-3	4	7	LTB-6
SDU-8	5	8	
SDU-4	6	9	DU7D-F2,LTB-4
SDU-5	7	10	DU7D-D12
SDU-7	8	13	DU6E-2
SDU-9	9	14	BF-4
SDU-20	10	27	
SDU-18	11	28	
SDU-19	12	29	
SDU-10	13	51	
SDU-11	14	52	
SDU-12	15	53	
SDU-13	16	54	
SDU-14	17	55	
SDU-15	18	56	
SDU-16	19	57	
SDU-17	20	58	
SDU-21	21	59	
SDU-22	22	60	
SDU-23	23	61	
SDU-24	24	62	

JUMP 7 & 9 [R]

RTB

DU7D-G5	1	LTI-6
DU7D-H5	2	LTI-7
DU7D-G6	3	LTI-8
DU7D-E2	4	BF-2,LTA-1
DU5F-17	5	LTB-2
DU7D-C1	6	LTA-2
DU7D-C2	7	LTA-38
DU7D-C3	8	LTO-1
DU7D-C4	9	LTO-2
DU7D-C5	10	LTO-3
DU7D-C6	11	LTO-4
DU7D-F11	12	LTO-5
DU7D-F12	13	LTO-6
DU7D-E12	14	LTO-7
DU7D-E4	15	LTO-8
DU7D-F4	16	LTO-9
DU7D-E5	17	LTO-10
	18	
	19	
	20	
	21	
	22	
	23	
	24	

LTA

BA-1	1	63	RTB-4
BA-2	2	64	RTB-6
BA-3	3	65	BX-L2
BA-4	4	66	BE-4
BA-5	5	67	
BA-6	6	68	
BA-7	7	69	
BA-8	8	70	
BA-9	9	71	
BA-10	10	72	
BA-11	11	73	
BA-12	12	74	
BA-13	13	75	
BA-14	14	76	
BA-15	15	77	
BA-16	16	78	
BA-17	17	79	
BA-19	18	80	
BA-18	19	81	
BA-20	20	82	
BD-1	21	83	
BD-2	22	84	
BD-3	23	85	
BD-4	24	86	
BD-5	25	87	
BD-6	26	88	
BD-7	27	89	
BD-8	28	90	
BD-9	29	91	
BD-10	30	92	
BD-11	31	93	
BD-12	32	94	
BD-13	33	95	
BD-14	34	96	
BD-15	35	97	
BD-16	36	98	
BD-17	37	99	LTB-3
BD-19	38	100	RTB-7
BD-18	39	101	
BD-20	40	102	

JUMP 1 & 37 [R]

LTI

1	.	
2	.	
3	.	
4	.	
5	.	
6	.	RTB-1
7	.	RTB-2
8	.	RTB-3
9	.	
10	.	
11	.	
12	.	

LTB

1	.	BX-L1
2	.	RTB-5
3	.	LTA-37
4	.	RTA-6
5	.	
6	.	RTA-4
7	.	BXY-2#12
8	.	BXY-3#12
9	.	BXY-4#12
10	.	BXY-7#12
11	.	BXY-6#12
12	.	BXY-5#12
13	.	BX-1
14	.	BX-5
15	.	BX-1
16	.	BX-5
17	.	
18	.	
19	.	
20	.	
21	.	
22	.	
23	.	
24	.	

JUMP 2 & 5 [R]

A B C

30 — A — X2 X1
CG
X1=STG-1#10
X2=CH-X2#10

30 — B — X2 X1
CH
X1=STG-2#10
X2=CG-X2,CI-X2##10

30 — C — X2 X1
CI
X1=STG-3#10
X2=CH-X2,STG-4##10

SDU

1=RTA-2	13=RTA-16
2=RTA-3	14=RTA-17
3=RTA-4	15=RTA-18
4=RTA-6	16=RTA-19
5=RTA-7	17=RTA-20
6=RTA-1	18=RTA-11
7=RTA-8	19=RTA-12
8=RTA-5	20=RTA-10
9=RTA-9	21=RTA-21
10=RTA-13	22=RTA-22
11=RTA-14	23=RTA-23
12=RTA-15	24=RTA-24

SDU — 12 11 10 9 8 7 6 5 4 3 2 1 / 24 23 22 21 20 19 18 17 16 15 14 13
REAR VIEW OF SECONDARY DISCONNECT

BE
1=BF-1#10
2=BX-L1,RTA-2
3=BF-3#10
4=LTA-4,RTA-3

20 21 1 15A 2 — 21 3 15A 4 — 8C

BF
1=BE-1,PTD-1##10
2=RTB-4
3=BE-3,PTD-2##10
4=RTA-9

20 21 1 15A 2 — 21 3 15A 4 — 8T

24 25 26 27 — 6 5 4 3 / 9 8 7 / 1 2 / 7 8 1 2 — 27DC

BXY
1=PTD1-1#10
2=LTB-7#12
3=LTB-8#12
4=LTB-9#12
5=LTB-12#12
6=LTB-11#12
7=LTB-10#12
8=PTD1-2#10

28 — L1 L2 — 1 2 / 5 3 4 6 — 62TA

BX
1=LTB-13
5=LTB-14
L1=BE-2,LTB-1
L2=LTA-3
△A 2=LTB-15
△A 6=LTB-16

31 — STG

CG-X1#10	1	1A	DU7D-G7#10
CH-X1#10	2	2A	DU7D-G8#10
CI-X1#10	3	3A	DU7D-G9#10
CI-X2,G-2##10	4	4A	DU7D-H10#10

G
2=STG-4#10
17=DU7D-G#12
18=DU7D-G12#12
20=DU7D-G11#12

1 2 3 4 5 6 7 8 9 10 11 12 13 14 15 16 17 18 19 20 — GRD

TERMINALS 8, 12 & 19 WILL ACCEPT UP 1/0 SIZE WIRE

DEVICE MOUNTING PANEL

△A 125VDC INTERCONNECTS — △A PTD 59

1	P(+)	PTD-1#4,BXY-1#10 △A
2	N(-)	PTD-2#4,BXY-8#10 △A

△A 125VDC FROM BATTERIES — △A PTD1 59

1	P(+)	PTD1-1#4,BF-1#10 △A
2	N(-)	PTD1-2#4,BF-3#10 △A

LTO

1	.	RTB-8
2	.	RTB-9
3	.	RTB-10
4	.	RTB-11
5	.	RTB-12
6	.	RTB-13
7	.	RTB-14
8	.	RTB-15
9	.	RTB-16
10	.	RTB-17
11	.	
12	.	

LEFT SIDE PANEL

RIGHT SIDE PANEL

JOB NAME: BUILDING #22 RENOVATIONS
JOB LOCATION: ALBANY, NY
DRAWN BY: J.RUSH
ENGR: VAN N. NGUYEN
DATE: JUNE 30, 2006
DRAWING STATUS: RECORD

EQUIPMENT DESIGNATION: PRIMARY SWITCH "A"
EQUIPMENT TYPE: MASTERCLAD SWITCHGEAR
DRAWING TYPE: WIRING DIAGRAM

SQUARE D COMPANY
Schneider Electric

DWG# W212958878-003-01 PG 1 OF 2 REV A

SECTION 1

SERIES 5

WIRE ROUTING EXAMPLE

1=BA-1,BD-2#SIZE

- NON-STANDARD WIRE SIZE
- DESTINATION PIN NUMBER
- SECOND DESTINATION
- DESTINATION PIN NUMBER
- FIRST DESTINATION
- DEVICE TERMINAL NUMBER

(--) ITEM NUMBER-SEE ELECTRICAL BILL OF MATERIAL

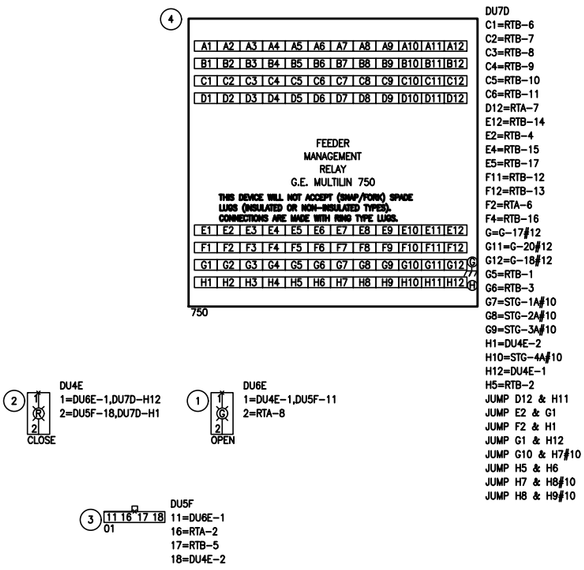

REAR VIEW UPPER DOOR

REAR VIEW LOWER DOOR

SECTION 1

SERIES 5

REV	DESCRIPTION	BY	DATE
-	----	--	--/--/--
-	----	--	--/--/--
-	----	--	--/--/--

JOB NAME: BUILDING #22 RENOVATIONS
JOB LOCATION: ALBANY, NY
DRAWN BY: J.RUSH
ENGR: VAN N. NGUYEN
DATE: JUNE 30, 2006
DRAWING STATUS: RECORD

EQUIPMENT DESIGNATION: PRIMARY SWITCH "A"
EQUIPMENT TYPE: MASTERCLAD SWITCHGEAR
DRAWING TYPE: WIRING DIAGRAM

SQUARE D COMPANY
Schneider Electric

DWG# W21295878-003-01 PG 2 OF 2 REV -

WIRE ROUTING EXAMPLE

1=BA-1,BD-2#SIZE

- NON-STANDARD WIRE SIZE
- DESTINATION PIN NUMBER
- SECOND DESTINATION
- DESTINATION PIN NUMBER
- FIRST DESTINATION
- DEVICE TERMINAL NUMBER

ITEM NUMBER-SEE ELECTRICAL BILL OF MATERIAL

LTI

1	.	
2	.	
3	.	
4	.	
5	.	
6	.	RTB-4
7	.	RTB-5
8	.	RTB-6
9	.	
10	.	
11	.	
12	.	

WIRING NOTES:
1. MAINTAIN PHASE TO GROUND CLEARANCES BETWEEN HIGH AND LOW VOLTAGE.
2. WIRES A,B,C ARE HIGH VOLTAGE SWITCHGEAR CABLE.

VT1
1=BFU-1
2=G-3#12,RTB-2
3=BFU-3
GW=G-1#12

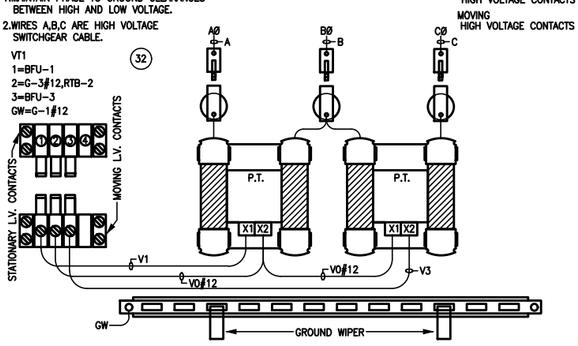

"A" COMPARTMENT

WIRING NOTES:
1. MAINTAIN PHASE TO GROUND CLEARANCES BETWEEN HIGH AND LOW VOLTAGE.
2. WIRES A,B,C ARE HIGH VOLTAGE SWITCHGEAR CABLE.

VT2
1=BFU-5
2=G-4#12,RTB-5
3=BFU-7
GW=G-2#12

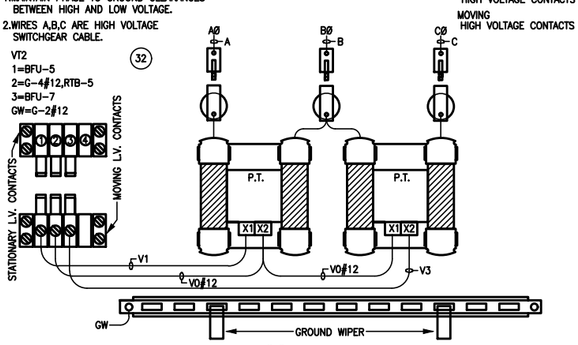

"B" COMPARTMENT

RTB

DU8E-1	1	.	BFU-2,RTO-1
DU8E-2	2	.	RTO-2,VT1-2
DU6E-2	3	.	BFU-4,RTO-3
DU4E-1	4	.	BFU-6,LTI-6
DU4E-2	5	.	LTI-7,VT2-2
DU2E-2	6	.	BFU-8,LTI-8
DU5C-8#10	7	.	RTO-4#10
DU5C-6#10	8	.	RTO-5#10
DU5C-4#10	9	.	RTO-6#10
DU5C-3#10	10	.	RTO-7#10
DU5C-25	11	.	BY-2
DU5C-27	12	.	BY-4
DU5A-18	13	.	
DU5B-18	14	.	
	15	.	LTO-9
DU5A-16	16	.	LTO-10
	17	.	LTO-11
DU5A-17	18	.	LTO-12
	19	.	LTO-13
DU5B-14	20	.	LTO-14
	21	.	LTO-15
DU5B-15	22	.	LTO-16
	23	.	LTO-17
DU5B-16	24	.	LTO-18
	25	.	LTO-19
DU5B-17	26	.	LTO-20
DU5A-14	27	.	LTN-14
DU5A-15	28	.	LTN-40
	29	.	
	30	.	

JUMP 11 & 15 [R]
JUMP 12 & 13 [R]
JUMP 13 & 14 [R]
JUMP 15 & 17 [L]
JUMP 17 & 19 [R]
JUMP 19 & 21 [L]
JUMP 21 & 23 [R]
JUMP 23 & 25 [L]

LTB

1	.	
2	.	CUSTOMER
3	.	CONNECTION
4	.	125VDC VOLTAGE
5	.	SENSOR RELAY
6	.	CONTACTS
7	.	
8	.	BXA-1
9	.	BXA-5
10	.	LTO-2,RTO-9
11	.	DU5C-15#18*RED
12	.	DU5C-14#18*BLK
13	.	DU5C-13#18*WHT
14	.	G-11#12 SHIELD
15	.	RTO-32
16	.	RTO-33
17	.	RTO-34
18	.	RTO-35
19	.	
20	.	

CUSTOMER KYZ FROM CM4

BELDEN 9365

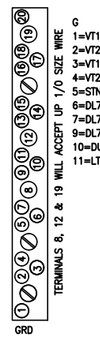

G
1=VT1-GW#12
2=VT2-GW#12
3=VT1-2#12
4=VT2-2#12
5=STN-4#10
6=DL7D-G11#12
7=DL7D-G12#12
9=DL7D-G#12
10=DU5C-26#12
11=LTB-14#12

RTD

DU5A-13	1	.	LTO-21
DU5A-11	2	.	LTO-22
DU5A-12	3	.	LTO-23
DU5A-3	4	.	LTO-24
DU5A-1	5	.	LTO-25
DU5A-2	6	.	LTO-26
DU5A-6	7	.	LTO-27
DU5A-4	8	.	LTO-28
DU5A-5	9	.	LTO-29
DU5A-9	10	.	LTO-30
DU5A-7	11	.	LTO-31
DU5A-8	12	.	LTO-32
DU5B-13	13	.	LTO-33
DU5B-11	14	.	LTO-34
DU5B-12	15	.	LTO-35
DU5B-3	16	.	LTO-36
DU5B-1	17	.	LTO-37
DU5B-2	18	.	LTO-38
DU5B-6	19	.	LTO-39
DU5B-4	20	.	LTO-40
DU5B-5	21	.	LTO-41
DU5B-9	22	.	LTO-42
DU5B-7	23	.	LTO-43
DU5B-8	24	.	LTO-44
	25	.	

MOUNTED ABOVE PANDUIT

PTD (59)

125VDC INTERCONNECTS			
	1	P(+)	BU-1#10
	2	N(-)	BY-3#10

LTN

BW-1	1	63	RTO-8
BW-2	2	64	RTO-12
BW-3	3	65	BXA-L2
BW-4	4	66	BU-4
BW-5	5	67	
BW-6	6	68	
BW-7	7	69	
BW-8	8	70	
BW-9	9	71	
BW-10	10	72	
BW-11	11	73	
BW-12	12	74	
BW-13	13	75	BY-2
BW-14	14	76	RTB-27
BW-15	15	77	
BW-16	16	78	
BW-17	17	79	
BW-19	18	80	
BW-18	19	81	
BW-20	20	82	
BZ-1	21	83	
BZ-2	22	84	
BZ-3	23	85	
BZ-4	24	86	
BZ-5	25	87	
BZ-6	26	88	
BZ-7	27	89	
BZ-8	28	90	
BZ-9	29	91	
BZ-10	30	92	
BZ-11	31	93	
BZ-12	32	94	
BZ-13	33	95	
BZ-14	34	96	
BZ-15	35	97	
BZ-16	36	98	
BZ-17	37	99	LTO-3
BZ-19	38	100	RTO-13
BZ-18	39	101	
BZ-20	40	102	RTB-28

JUMP 1 & 37 [R]
JUMP 13 & 39 [R]

LTO

1	.		BXA-L1
2	.		LTB-9
3	.		LTN-37
4	.		RTN-6
5	.		RTO-14
6	.		RTO-15
7	.		RTO-16
8	.		RTO-17
9	.		RTB-15
10	.		RTB-16
11	.		RTB-17
12	.		RTB-18
13	.		RTB-19
14	.		RTB-20
15	.		RTB-21
16	.		RTB-22
17	.		RTB-23
18	.		RTB-24
19	.		RTB-25
20	.		RTB-26
21	.		RTD-1
22	.		RTD-2
23	.		RTD-3
24	.		RTD-4
25	.		RTD-5
26	.		RTD-6
27	.		RTD-7
28	.		RTD-8
29	.		RTD-9
30	.		RTD-10
31	.		RTD-11
32	.		RTD-12
33	.		RTD-13
34	.		RTD-14
35	.		RTD-15
36	.		RTD-16
37	.		RTD-17
38	.		RTD-18
39	.		RTD-19
40	.		RTD-20
41	.		RTD-21
42	.		RTD-22
43	.		RTD-23
44	.		RTD-24
45	.		RTD-18
46	.		RTD-19
47	.		RTD-20
48	.		RTD-21
49	.		RTD-22
50	.		RTD-23
51	.		RTD-24
52	.		RTD-25
53	.		RTD-26
54	.		RTD-27
55	.		RTD-28
56	.		RTD-29
57	.		RTD-30
58	.		RTD-31
59	.		
60	.		

LTP

1	.	
2	.	
3	.	
4	.	
5	.	
6	.	
7	.	
8	.	
9	.	
10	.	
11	.	
12	.	

CUSTOMER SPARES

LEFT SIDE PANEL

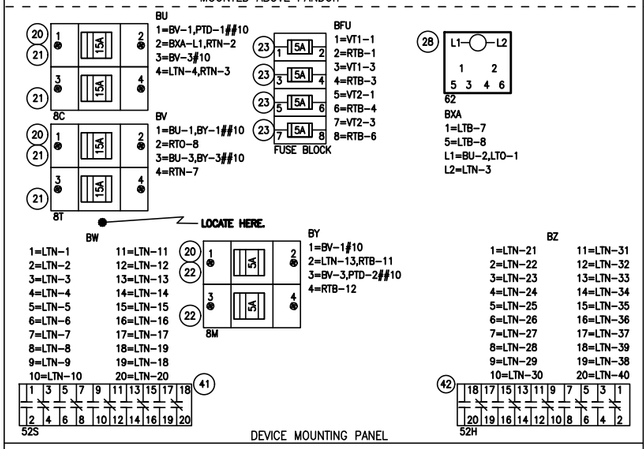

DEVICE MOUNTING PANEL

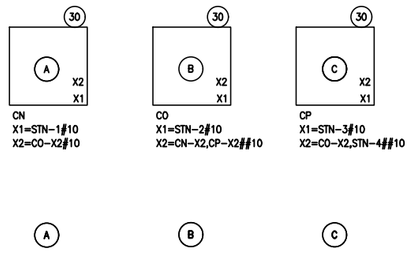

SDL

1=RTN-2	13=RTN-16
2=RTN-3	14=RTN-17
3=RTN-4	15=RTN-18
4=RTN-6	16=RTN-19
5=RTN-7	17=RTN-20
6=RTN-1	18=RTN-11
7=RTN-8	19=RTN-12
8=RTN-5	20=RTN-10
9=RTN-9	21=RTN-21
10=RTN-13	22=RTN-22
11=RTN-14	23=RTN-23
12=RTN-15	24=RTN-24

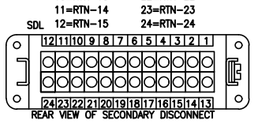

REAR VIEW OF SECONDARY DISCONNECT

31 STN

CN-X1#10	1	1A	DL3C-6#10
CO-X1#10	2	2A	DL3C-10#10
CP-X1#10	3	3A	DL3C-14#10
CP-X2,G-5#10	4	4A	DL3C-16#10

RTO

DL3C-2	1	.	RTB-1
DL7D-H5	2	.	RTB-2
DL3C-20	3	.	RTB-3
DL3C-4#10	4	.	RTB-7#10
DL3C-8#10	5	.	RTB-8#10
DL3C-12#10	6	.	RTB-9#10
DL3C-18#10	7	.	RTB-10#10
DL4A-1	8	.	BV-2,LTN-1
DL5B-17	9	.	LTB-9
DL7B-11	10	.	LTB-10
DL4A-2,DL5B-18	11	.	RTN-6
DL7D-C1	12	.	LTN-2
DL7D-C2	13	.	LTN-38
DL7D-C3	14	.	LTO-5
DL7D-C4	15	.	LTO-6
DL7D-C5	16	.	LTO-7
DL7D-C6	17	.	LTO-8
DL7B-51	18	.	LTO-45
DL7B-53	19	.	LTO-46
DL7B-52	20	.	LTO-47
DL7B-58	21	.	LTO-48
DL7B-55	22	.	LTO-49
DL7B-57	23	.	LTO-50
DL7B-56	24	.	LTO-51
DL7B-54	25	.	LTO-52
DL7D-F11	26	.	LTO-53
DL7D-F12	27	.	LTO-54
DL7D-E12	28	.	LTO-55
DL7D-E4	29	.	LTO-56
DL7D-F4	30	.	LTO-57
DL7D-E5	31	.	LTO-58
DL7B-15	32	.	LTB-15
DL7B-17	33	.	LTB-16
DL7B-21	34	.	LTB-17
DL7B-23	35	.	LTB-18
	36	.	

RTN

SDL-6	1	4	
SDL-1	2	5	BU-2,DL5B-16
SDL-2	3	6	BU-4
SDL-3	4	7	DL7B-13
SDL-8	5	8	
SDL-4	6	9	LTO-4,RTO-11
SDL-5	7	10	BV-4
SDL-7	8	13	DL6A-2
SDL-9	9	14	DL7B-28
SDL-20	10	27	
SDL-18	11	28	
SDL-19	12	29	
SDL-10	13	51	
SDL-11	14	52	
SDL-12	15	53	
SDL-13	16	54	
SDL-14	17	55	
SDL-15	18	56	
SDL-16	19	57	
SDL-17	20	58	
SDL-21	21	59	
SDL-22	22	60	
SDL-23	23	61	
SDL-24	24	62	

JUMP 7 & 9 [R]

RIGHT SIDE PANEL

SECTION 2

SERIES 5

JOB NAME:	BUILDING #22 RENOVATIONS
JOB LOCATION:	ALBANY, NY
DRAWN BY:	J.RUSH
ENGR:	VAN N. NGUYEN
DATE:	JUNE 30, 2006
DRAWING STATUS:	RECORD
EQUIPMENT DESIGNATION:	-PRIMARY SWITCH "A"
EQUIPMENT TYPE:	MASTERCLAD SWITCHGEAR
DRAWING TYPE:	WIRING DIAGRAM
DWG#	W212958878-003-02
	SQUARE D COMPANY Schneider Electric
	PG 1 OF 2
	REV –

REV	DESCRIPTION	BY	DATE
–			

WIRE ROUTING EXAMPLE
1=BA-1,BD-2#SIZE
- NON-STANDARD WIRE SIZE
- DESTINATION PIN NUMBER
- SECOND DESTINATION
- DESTINATION PIN NUMBER
- FIRST DESTINATION
- DEVICE TERMINAL NUMBER

(---) ITEM NUMBER-SEE ELECTRICAL BILL OF MATERIAL

(10) (XXX) CM DISPLAY — DU5D

SLOT "A" OF CIRCUIT MONITOR

(11)

COMMON	18
S4	17
S3	16
S2	15
S1	14
RO-NC	13
RO-NO	12
RO COMMON	11
.	10
R3-NC	9
R3-NO	8
R3-COMMON	7
R2-NC	6
R2-NO	5
R2-COMMON	4
R1-NC	3
R1-NO	2
R1-COMMON	1

70

DU5A
1=RTD-5
2=RTD-6
3=RTD-4
4=RTD-8
5=RTD-9
6=RTD-7
7=RTD-11
8=RTD-12
9=RTD-10
11=RTD-2
12=RTD-3
13=RTD-1
14=RTD-27
15=RTD-28
16=RTD-16
17=RTD-18
18=RTD-13

ELECTROSTATIC SENSITIVE DEVICE GROUNDING STRAP MUST BE USED DURING INSTALLATION!!!

(9) (12)

V1	12
V2	11
V3	10
VN	9
N	27
G	26
L	25
SHIELD	24
OUT-	23
OUT+	22
IN-	21
IN+	20
DCP	19
I1+	8
I1-	7
I2+	6
I2-	5
I3+	4
I3-	3
I4+	2
I4-	1
RS-232	18
DATA	17
COMM	16
K	15
Z	14
Y	13

SLOT A | SLOT B

CM4000 — VIEW FROM REAR

DU5C
3=RTB-10#10
4=RTB-9#10
6=RTB-8#10
8=RTB-7#10
10=DU6E-2
11=DU6E-1
12=DU8E-1
13=LTB-13#18*WHT
14=LTB-12#18*BLK
15=LTB-11#18*RED
25=RTB-11
26=G-10#12
27=RTB-12
JUMP 3 & 5#10
JUMP 5 & 7#10
JUMP 9 & 11

BELDEN 9363 *

* TIE BACK AND TAPE SHIELD.

SLOT "B" OF CIRCUIT MONITOR

(11)

COMMON	18
S4	17
S3	16
S2	15
S1	14
RO-NC	13
RO-NO	12
RO COMMON	11
.	10
R3-NC	9
R3-NO	8
R3-COMMON	7
R2-NC	6
R2-NO	5
R2-COMMON	4
R1-NC	3
R1-NO	2
R1-COMMON	1

70

DU5B
1=RTD-17
2=RTD-18
3=RTD-16
4=RTD-20
5=RTD-21
6=RTD-19
7=RTD-23
8=RTD-24
9=RTD-22
11=RTD-14
12=RTD-15
13=RTD-13
14=RTB-20
15=RTB-22
16=RTB-24
17=RTB-26
18=RTB-14

ELECTROSTATIC SENSITIVE DEVICE GROUNDING STRAP MUST BE USED DURING INSTALLATION!!!

BUS A

(8) (7) 7K 1/2W RES — DU2E
1=DU4E-2
2=RTB-6
PHASE B-C

(8) (7) 7K 1/2W RES — DU4E
1=RTB-4
2=DU2E-1,RTB-5
PHASE A-B

LINE A

(8) (7) 7K 1/2W RES — DU6E
1=DU5C-11,DU8E-2
2=DU5C-10,RTB-3
PHASE B-C

(8) (7) 7K 1/2W RES — DU8E
1=DU5C-12,RTB-1
2=DU6E-1,RTB-2
PHASE A-B

REAR VIEW UPPER DOOR

(2) DL4A
1=DL6A-1,RTO-8
2=RTO-11
CLOSE

(1) DL6A
1=DL4A-1,DL7A-1
2=RTN-8
OPEN

(14) DL7A
1=DL5B-11,DL6A-1
2=DL7B-22
TRIP

(3) 11 16 17 18 — 01 — DL5B
11=DL7A-1,DL7B-12
16=RTN-2
17=RTO-9
18=DL7B-18,RTO-11

(13) DL7B

	G	B	
11	13	12	18
15	17	16	14
21	23	22	28
25	27	26	24
31	33	32	38
35	37	36	34
41	43	42	48
45	47	46	44
51	53	52	58
55	57	56	54

86

11=RTO-10
12=DL5B-11,DL7D-E2
13=RTN-4
15=RTO-32
17=RTO-33
18=DL5B-18,DL7D-H1
21=RTO-34
22=DL7A-2
23=RTO-35
28=RTN-9
51=RTO-18
52=RTO-20
53=RTO-19
54=RTO-25
55=RTO-22
56=RTO-24
57=RTO-23
58=RTO-21
B=DL7D-D12
G=DL7D-F2
JUMP 28 & B

(5)

19	17	15	13	11	9	7	5	3	1										
J	J	J	H	G	F	E	D	C	B	A									
LETTERS INDICATE SWITCH POLE																			
20	18	16	14	12	10	8	6	4	2										

FT-78

DL3C
1=DL7D-G5
2=RTO-1
3=DL7D-H7#10
4=RTO-4#10
5=DL7D-G7#10
6=STN-1A#10
7=DL7D-H8#10
8=RTO-5#10
9=DL7D-G8#10
10=STN-2A#10
11=DL7D-H9#10
12=RTO-6#10
13=DL7D-G9#10
14=STN-3A#10
15=DL7D-H10#10
16=STN-4A#10
17=DL7D-G10#10
18=RTO-7#10
19=DL7D-G6
20=RTO-3

(4)

A1	A2	A3	A4	A5	A6	A7	A8	A9	A10	A11	A12
B1	B2	B3	B4	B5	B6	B7	B8	B9	B10	B11	B12
C1	C2	C3	C4	C5	C6	C7	C8	C9	C10	C11	C12
D1	D2	D3	D4	D5	D6	D7	D8	D9	D10	D11	D12

FEEDER
MANAGEMENT
RELAY
G.E. MULTILIN 750

THIS DEVICE WILL NOT ACCEPT (SNAP/FORK) SPADE LUGS (INSULATED OR NON-INSULATED TYPES).
CONNECTIONS ARE MADE WITH RING TYPE LUGS.

E1	E2	E3	E4	E5	E6	E7	E8	E9	E10	E11	E12
F1	F2	F3	F4	F5	F6	F7	F8	F9	F10	F11	F12
G1	G2	G3	G4	G5	G6	G7	G8	G9	G10	G11	G12
H1	H2	H3	H4	H5	H6	H7	H8	H9	H10	H11	H12

G7 G8

750

DL7D
C1=RTO-12
C2=RTO-13
C3=RTO-14
C4=RTO-15
C5=RTO-16
C6=RTO-17
D12=DL7B-B
E12=RTO-28
E2=DL7B-12
E4=RTO-29
E5=RTO-31
F11=RTO-26
F12=RTO-27
F2=DL7B-G
F4=RTO-30
G=G-9#12
G10=DL3C-17#10
G11=G-6#12
G12=G-7#12
G5=DL3C-1
G6=DL3C-19
G7=DL3C-5#10
G8=DL3C-9#10
G9=DL3C-13#10
H1=DL7B-18
H10=DL3C-15#10
H5=RTO-2
H7=DL3C-3#10
H8=DL3C-7#10
H9=DL3C-11#10
JUMP D12 & H11
JUMP E2 & G1
JUMP G1 & H12
JUMP H5 & H6

REAR VIEW LOWER DOOR

SECTION 2

SERIES 5

REV	DESCRIPTION	BY	DATE
–	----	--	--/--/--

JOB NAME: BUILDING #22 RENOVATIONS
JOB LOCATION: ALBANY, NY
DRAWN BY: J.RUSH
ENGR: VAN N. NGUYEN
DATE: JUNE 30, 2006
DRAWING STATUS: RECORD

EQUIPMENT DESIGNATION: PRIMARY SWITCH "A"
EQUIPMENT TYPE: MASTERCLAD SWITCHGEAR
DRAWING TYPE: WIRING DIAGRAM

SQUARE D COMPANY
Schneider Electric

DWG# W212958878-003-02 | PG 2 OF 2 | REV –

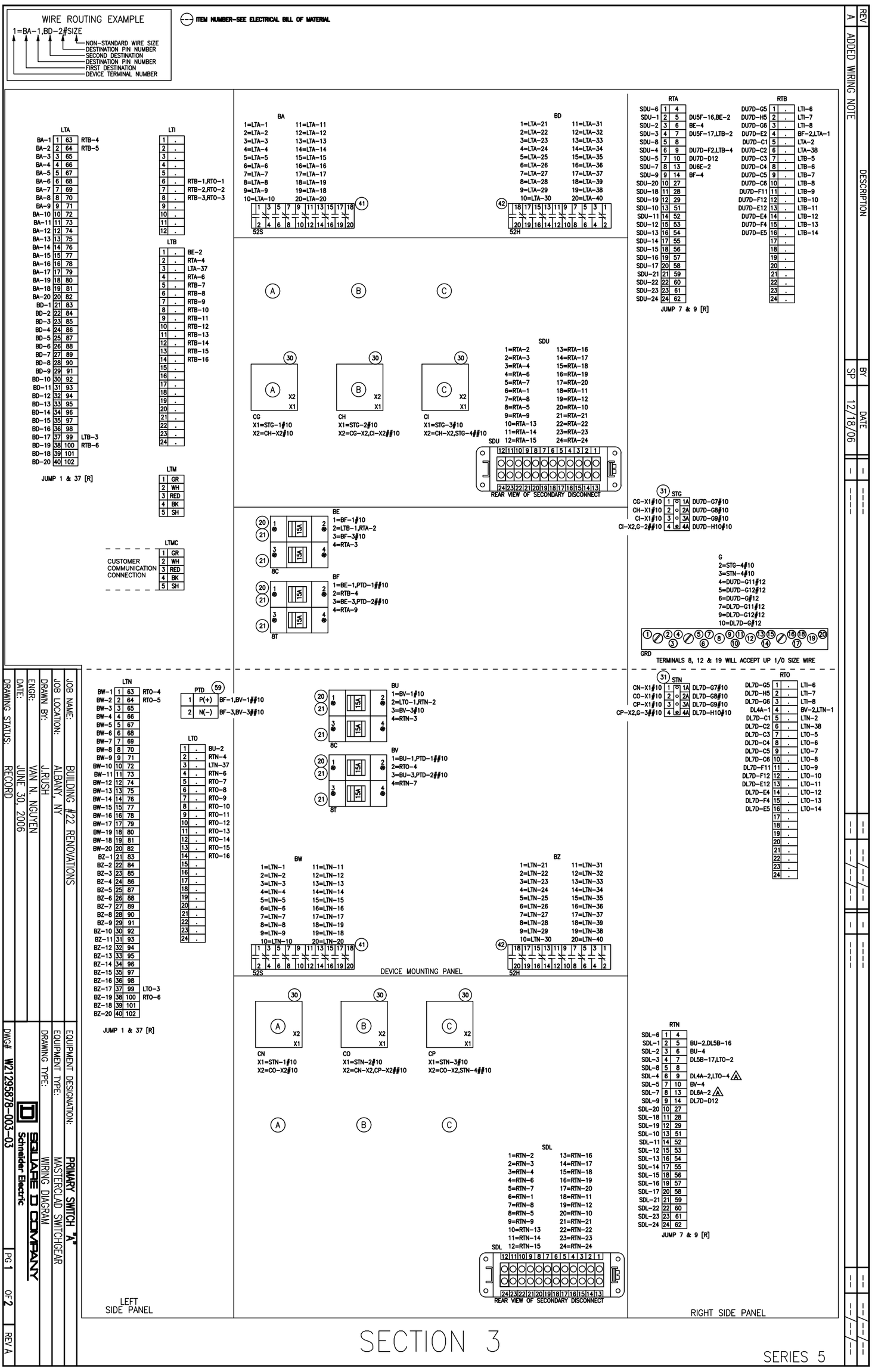

SECTION 3

SERIES 5

WIRE ROUTING EXAMPLE

1=BA-1,BD-2#SIZE

- NON-STANDARD WIRE SIZE
- DESTINATION PIN NUMBER
- SECOND DESTINATION
- DESTINATION PIN NUMBER
- FIRST DESTINATION
- DEVICE TERMINAL NUMBER

(---) ITEM NUMBER-SEE ELECTRICAL BILL OF MATERIAL

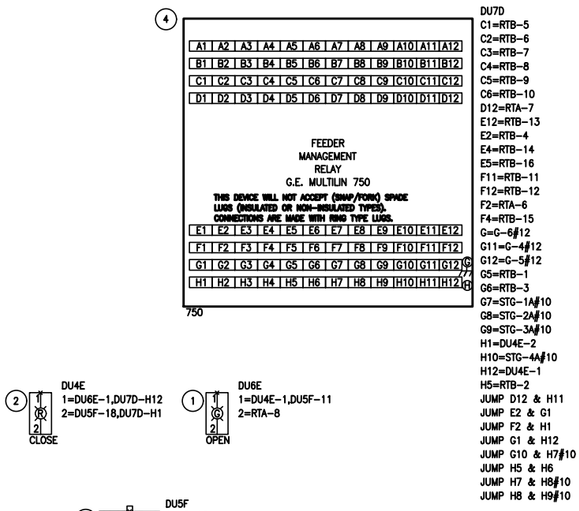

REAR VIEW UPPER DOOR

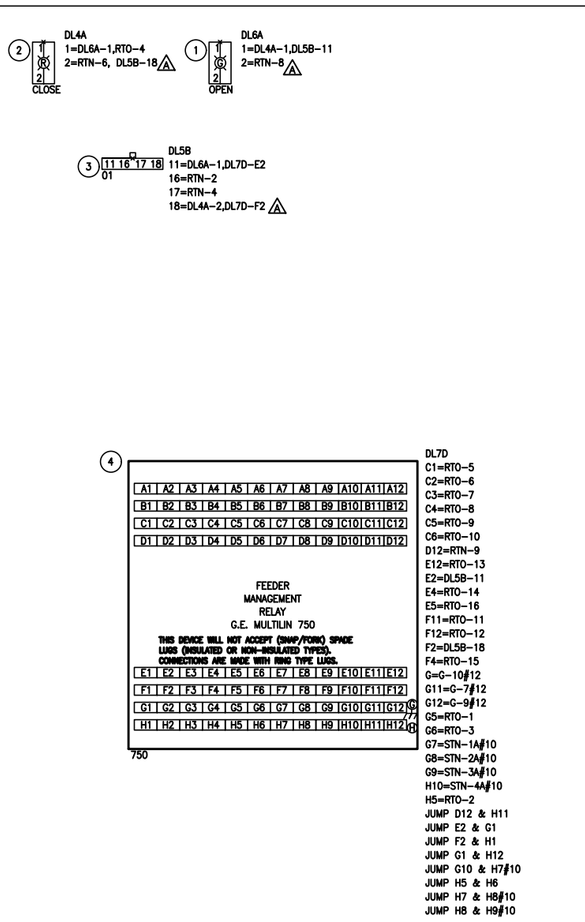

REAR VIEW LOWER DOOR

SECTION 3

SERIES 5

REV	DESCRIPTION	BY	DATE
A	ADD WIRING NOTE	SP	12/18/06

JOB NAME:	BUILDING #22 RENOVATIONS
JOB LOCATION:	ALBANY, NY
DRAWN BY:	J.RUSH
ENGR:	VAN N. NGUYEN
DATE:	JUNE 30, 2006
DRAWING STATUS:	RECORD
EQUIPMENT DESIGNATION:	PRIMARY SWITCH "A"
EQUIPMENT TYPE:	MASTERCLAD SWITCHGEAR
DRAWING TYPE:	WIRING DIAGRAM

SQUARE D COMPANY
Schneider Electric

DWG# W212958878-003-03 | PG 2 OF 2 | REV A

REV	DESCRIPTION	BY	DATE	–	----	--	--/--/--	–	----	--	--/--/--
–	----	–	--/--/--	–	----	--	--/--	–	----	--	--/--

PRIMARY SWITCH "A" FO#21295878-003

Section 1

[1] LTI

	1	.
	2	.
	3	.
	4	.
	5	.
[2]LTI-6	6	.
[2]LTI-7	7	.
[2]LTI-8	8	.
	9	.
	10	.
	11	.
	12	.

[1] PTD (57)

[2]PTD-1#4	1	P(+)
[2]PTD-2#4	2	N(–)

[1] LTB

	1	.
	2	.
	3	.
	4	.
∗ [002/3]LTB-15,[2]LTB-7	5	.
[2]LTB-15	6	.
[2]LTB-1#12	7	.
[2]LTB-2#12	8	.
[2]LTB-3#12	9	.
[2]LTB-4#12	10	.
[2]LTB-5#12	11	.
[2]LTB-6#12	12	.
[2]LTB-9	13	.
[2]LTB-10	14	.
	15	.
	16	.
	17	.
	18	.
	19	.
	20	.
	21	.
	22	.
	23	.
	24	.

Section 2

[2] LTI

	1	.
	2	.
	3	.
	4	.
	5	.
[1]LTI-6,[3]LTI-6	6	.
[1]LTI-7,[3]LTI-7	7	.
[1]LTI-8,[3]LTI-8	8	.
	9	.
	10	.
	11	.
	12	.

[2] PTD (57)

[1]PTD-1,[3]PTD-1##4	1	P(+)
[1]PTD-2,[3]PTD-2##4	2	N(–)

[2] LTB

[1]LTB-7#12	1	.
[1]LTB-8#12	2	.
[1]LTB-9#12	3	.
[1]LTB-10#12	4	.
[1]LTB-11#12	5	.
[1]LTB-12#12	6	.
[1]LTB-5	7	.
∗ [002/3]LTB-16	8	.
[1]LTB-13	9	.
[1]LTB-14	10	.
	11	.
	12	.
	13	.
	14	.
[1]LTB-6	15	.
∗ [002/3]LTB-17	16	.
	17	.
	18	.
	19	.
	20	.

Section 3

[3] LTI

	1	.
	2	.
	3	.
	4	.
	5	.
[2]LTI-6	6	.
[2]LTI-7	7	.
[2]LTI-8	8	.
	9	.
	10	.
	11	.
	12	.

[3] PTD (57)

[2]PTD-1#4	1	P(+)
[2]PTD-2#4	2	N(–)

Section 4

∗ COIL AND SECURE 30' WITH LABELS ATTACHED FOR CONNECTIONS TO BE MADE IN FIELD.

FOR INTERCONNECTIONS BETWEEN LINE ITEMS--
EXAMPLE: [002/3]
- SECTION NUMBER
- LINE ITEM

PRIMARY SWITCH "B" FO#21295878-002

Section 3

[002/3] LTB

	1	.
	2	.
	3	.
	4	.
	5	.
	6	.
	7	.
	8	.
	9	.
	10	.
	11	.
	12	.
	13	.
	14	.
[1]LTB-5	15	.
[2]LTB-8	16	.
[2]LTB-16	17	.
	18	.
	19	.
	20	.

INTERCONNECTION DIAGRAM

JOB NAME:	BUILDING #22 RENOVATIONS	EQUIPMENT DESIGNATION:	PRIMARY SWITCH "A"
JOB LOCATION:	ALBANY, NY	EQUIPMENT TYPE:	MASTERCLAD SWITCHGEAR
DRAWN BY:	J.RUSH	DRAWING TYPE:	WIRING DIAGRAM
ENGR:	VAN N. NGUYEN	SQUARE D COMPANY Schneider Electric	
DATE:	JUNE 30, 2006		
DRAWING STATUS:	RECORD	DWG# W21295878-003-IC	PG 1 OF 1 REV –

REV	DESCRIPTION	BY	DATE								
–	----	--	--/--/--	–	----	--	--/--/--	–	----	--	--/--/--
				–	----	--	--/--/--	–	----	--	--/--/--

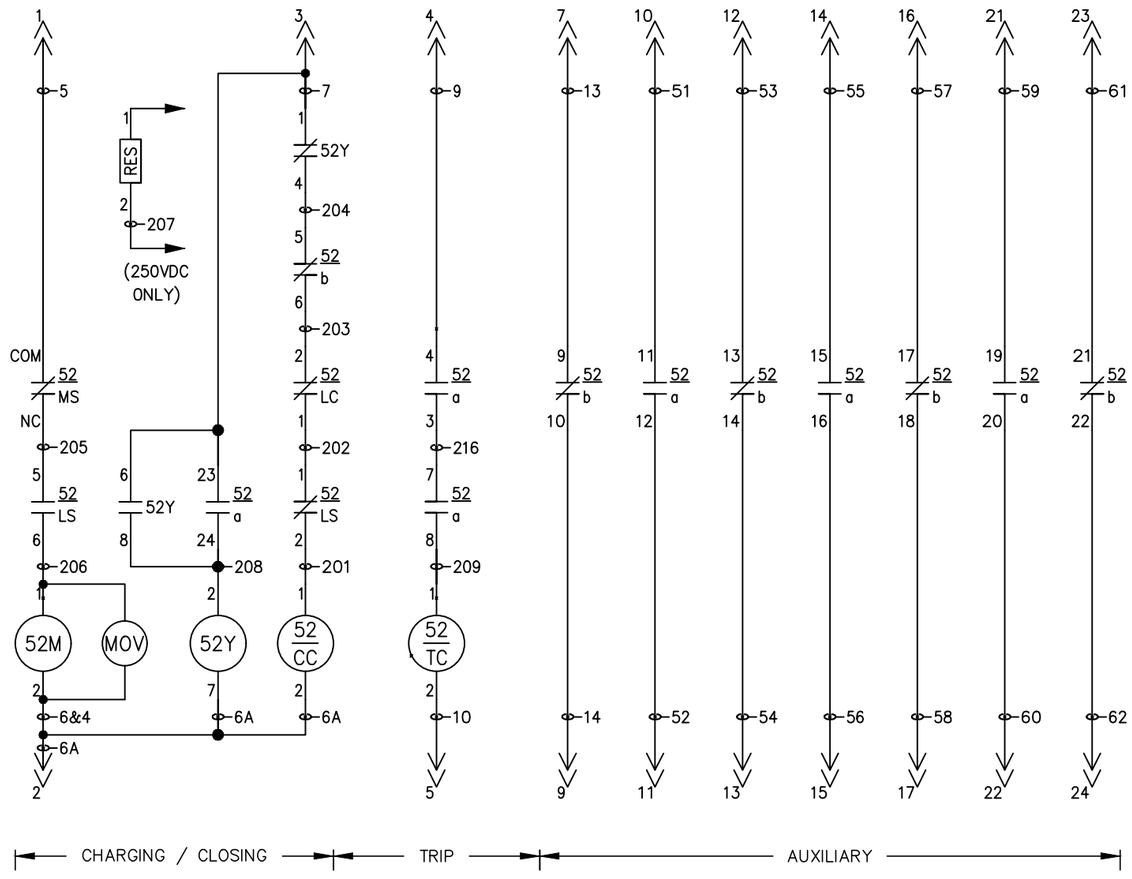

REF: 46040–651–00

OPERATION OF BREAKER

1. THE BREAKER WILL CLOSE IF THE CLOSING SPRINGS HAVE BEEN CHARGED ELECTRICALLY OR MANUALLY. 52/MS ENSURES THAT THE CLOSING SPRINGS CAN ONLY BE CHARGED ELECTRICALLY WITH THE BREAKER IN THE CONNECTED AND TEST POSITIONS.

2. THE CLOSING CIRCUIT HAS CONTINUITY WHEN THE CLOSING SPRINGS ARE CHARGED AND THE BREAKER IS OPEN. APPLYING A CLOSE SIGNAL ENERGIZES THE CLOSE COIL, 52/CC. IT DISCHARGES THE CLOSING SPRINGS, CLOSING THE BREAKER AND CHARGING THE OPENING SPRINGS. WHEN THE BREAKER CLOSES, 52/a, 52/b AND 52/LS CHANGE STATE.

3. 52/a CLOSING ALLOWS CONTINUITY IN THE TRIP CIRCUIT AND PICKS UP THE ANTI–PUMP RELAY, 52Y. 52Y SEALS ITSELF IN, ENSURING THAT THE CLOSE SIGNAL MUST BE REMOVED AND REAPPLIED BEFORE THE BREAKER CAN BE CLOSED AGAIN. 52/b, 52/LS AND 52Y OPEN THE CLOSING CIRCUIT. 52/LS CHANGING STATE ALLOWS THE CLOSING SPRINGS TO BE CHARGED.

4. APPLYING A TRIP SIGNAL ENERGIZES THE TRIP COIL, 52/TC. IT DISCHARGES THE OPENING SPRINGS, OPENING THE BREAKER. WHEN THE BREAKER OPENS, 52/a AND 52/b CHANGE STATE.

5. SPARE 52/a AND 52/b CONTACTS INDICATE THE BREAKER STATE. 52/a CLOSES WHEN THE BREAKER CLOSES. 52/b CLOSES WHEN THE BREAKER OPENS.

LEGEND

52	CIRCUIT BREAKER
52M	SPRING CHARGING MOTOR
52Y	ANTI–PUMP RELAY
52/a	AUX. SWITCH CONTACTS, OPEN WHEN BREAKER IS OPEN
52/b	AUX. SWITCH CONTACTS, CLOSED WHEN BREAKER IS OPEN
52/CC	CLOSE COIL
52/LC	LATCH CHECK SWITCH
52/LS	SPRING CHARGING MOTOR LIMIT SWITCH
52/MS	MOTOR CUTOFF SWITCH
52/TC	TRIP COIL
RES	RESISTOR (250VDC CLOSING ONLY)

NOTES:

1. BREAKER SHOWN IN THE OPEN STATE WITH CLOSING SPRINGS CHARGED.
2. WHERE WIRE NUMBERS CHANGE ON A WIRE, THERE ARE INTERVENING TERMINAL BLOCKS NOT SHOWN.
3. BREAKER WIRING DIAGRAM IS 46040–652.

JOB NAME:	BUILDING #22 RENOVATIONS	EQUIPMENT DESIGNATION:	PRIMARY SWITCH "A"
JOB LOCATION:	ALBANY NY	EQUIPMENT TYPE:	MASTERCLAD SWITCHGEAR
DRAWN BY:	CAD	DRAWING TYPE:	BREAKER
ENGR:	VAN N. NGUYEN		SQUARE D Schneider Electric
DATE:	FEBRUARY 02, 2006		
DRAWING STATUS:	RECORD	DWG# R21295878–003–01	PG 1 OF 1 REV –

REV	DESCRIPTION	BY	DATE	-	----	--	--/--/--	-	----	--	--/--/--
-	----	--	--/--/--	-	----	--	--/--/--	-	----	--	--/--/--

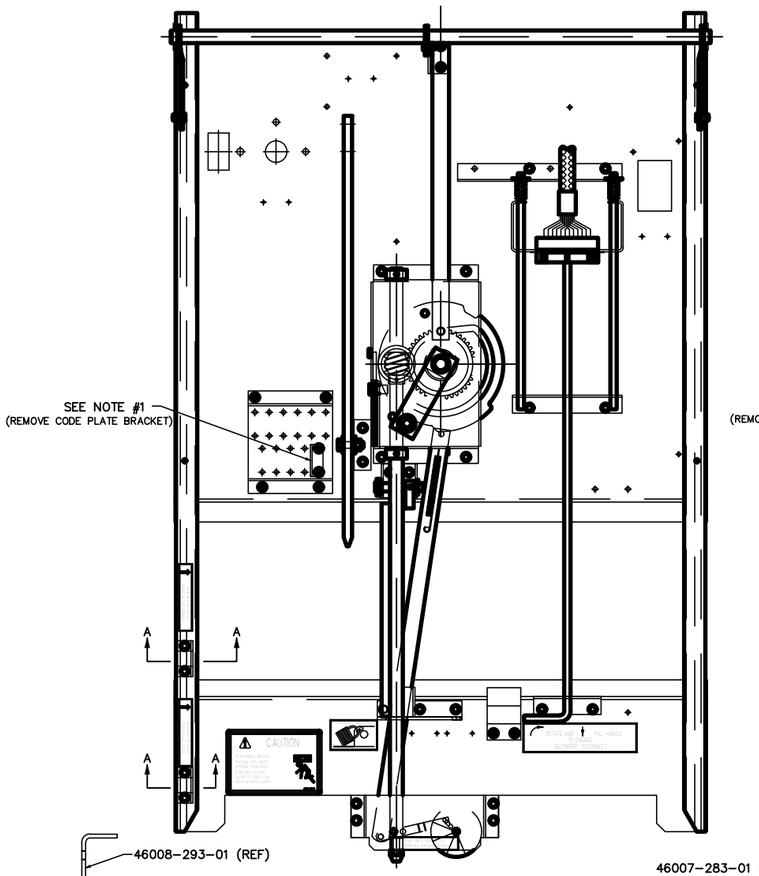

FIGURE 1
-EG&TD WITH CONTACT IN UPPER POSITION
CAN BE INSERTED INTO THIS BREAKER CELL.
-NORMALLY THE UPPER CELL

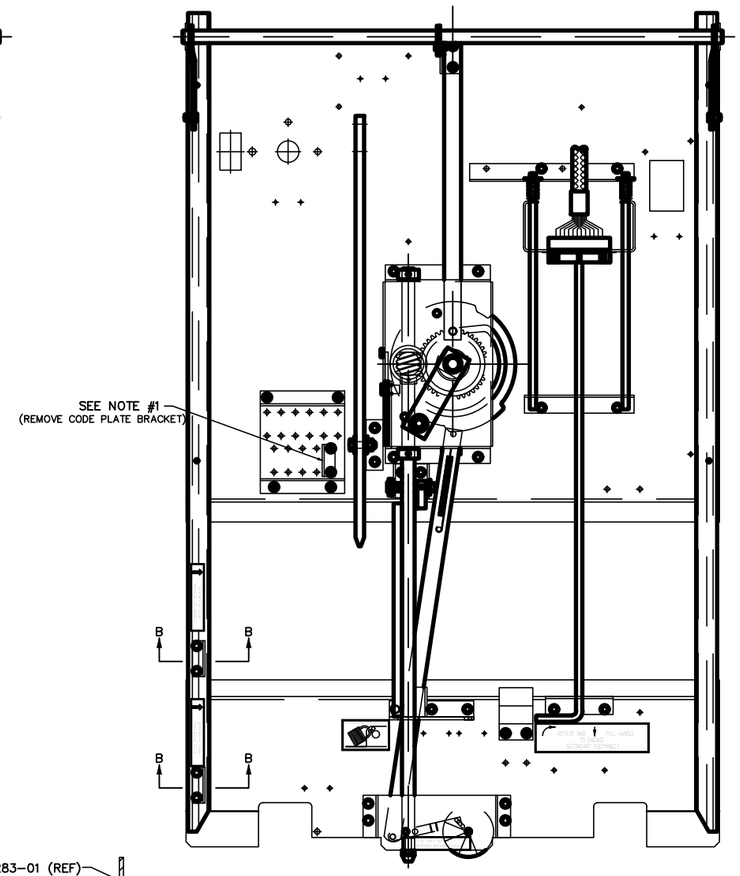

FIGURE 2
-EG&TD WITH CONTACT IN LOWER POSITION
CAN BE INSERTED INTO THIS BREAKER CELL.
-NORMALLY THE LOWER CELL

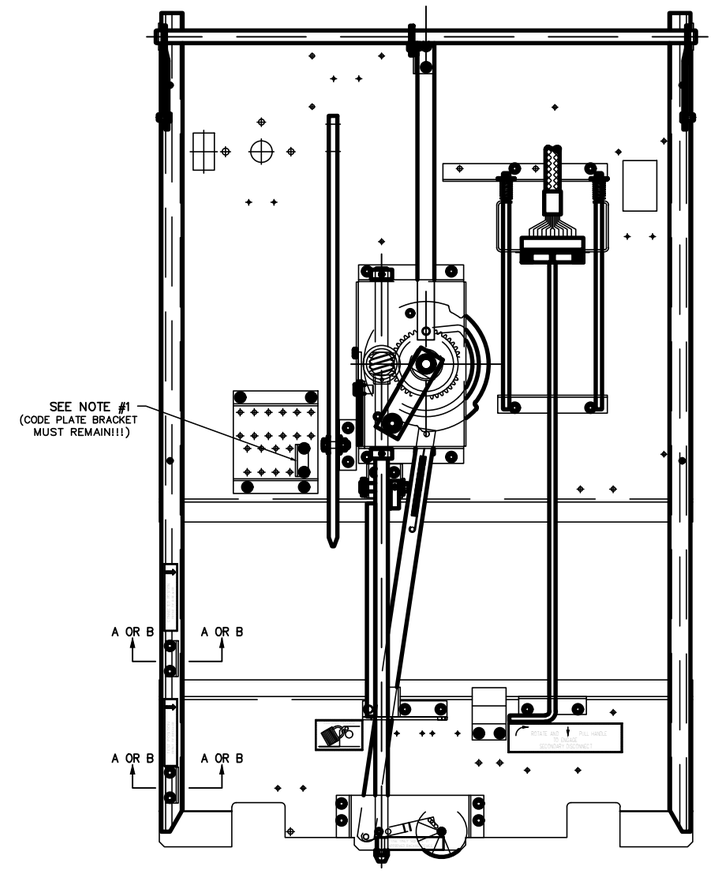

FIGURE 3 (LOWER CELL SHOWN)
-EG&TD WITH CONTACTS IN ANY POSITION
CAN NOT BE INSERTED INTO THIS BREAKER CELL.
-NORMALLY TIE AND/OR MAIN BREAKER CELLS.

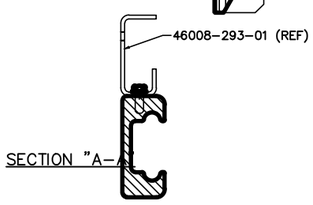

SCALE = 1 : 1.333

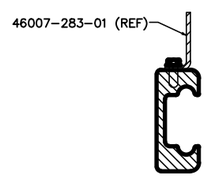

SECTION "B-B"

SCALE = 1 : 2

NOTES: (FOR FACTORY USE ONLY)

1) ALL BREAKER CELLS ARE EQUIPPED WITH CODE PLATE BRACKET (P/N 46007-642-01) TO BLOCK OUT ALL GROUND & TEST DEVICES. THIS INTERLOCK HAS TO BE REMOVED FROM ALL BREAKER CELLS OF A FACTORY ORDER WHERE AN EG&TD IS TO BE USED. (MUST BE LEFT IN AT CELLS USING FIGURE 3)
2) 3000A EG&TD CAN ONLY BE INSERTED INTO LOWER BREAKER CELLS.

JOB NAME:	BUILDING #22 RENOVATIONS	EQUIPMENT DESIGNATION:	PRIMARY SWITCH "A"
JOB LOCATION:	ALBANY NY	EQUIPMENT TYPE:	MASTERCLAD SWITCHGEAR
DRAWN BY:	CAD	DRAWING TYPE:	ELECTRIC GND TEST DEVICE
ENGR:	VAN N. NGUYEN		SQUARE D Schneider Electric
DATE:	FEBRUARY 02, 2006		
DRAWING STATUS:	RECORD	DWG# R21295878-003-02	PG1 OF1 REV -

REV	DESCRIPTION	BY	DATE								
–	----	--	--/--/--	–	----	--	--/--/--	–	----	--	--/--/--
–	----	--	--/--/--	–	----	--	--/--/--	–	----	--	--/--/--

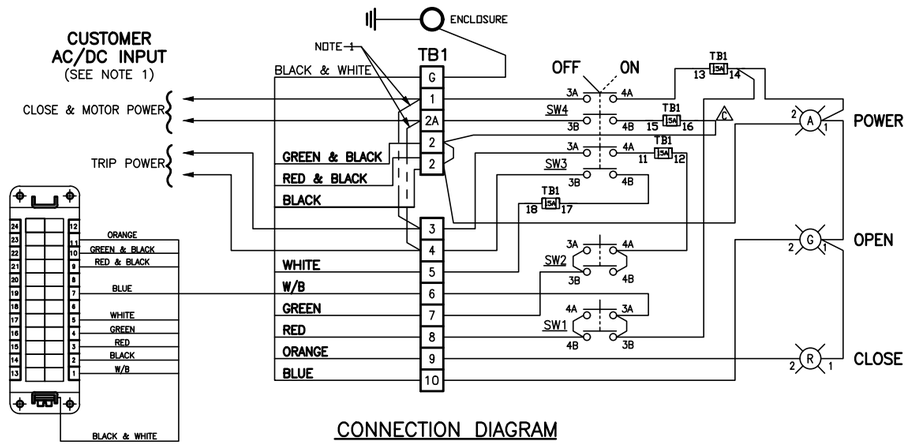

CONNECTION DIAGRAM

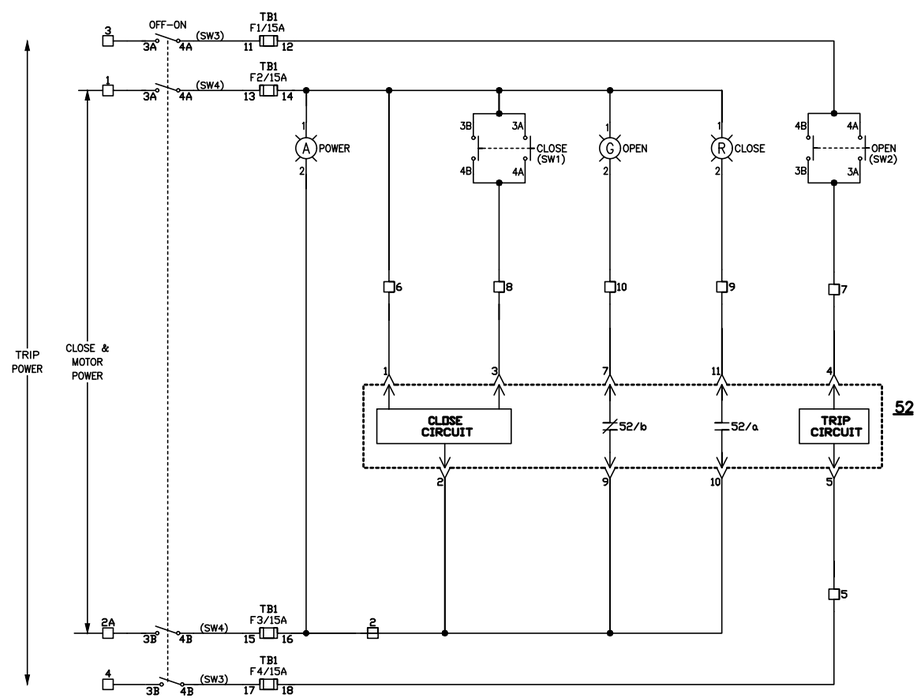

CONTROL DIAGRAM

USE SLUGS IN FUSE BLOCK F3 AND F4 WHEN CIRUITS ARE 120VAC.

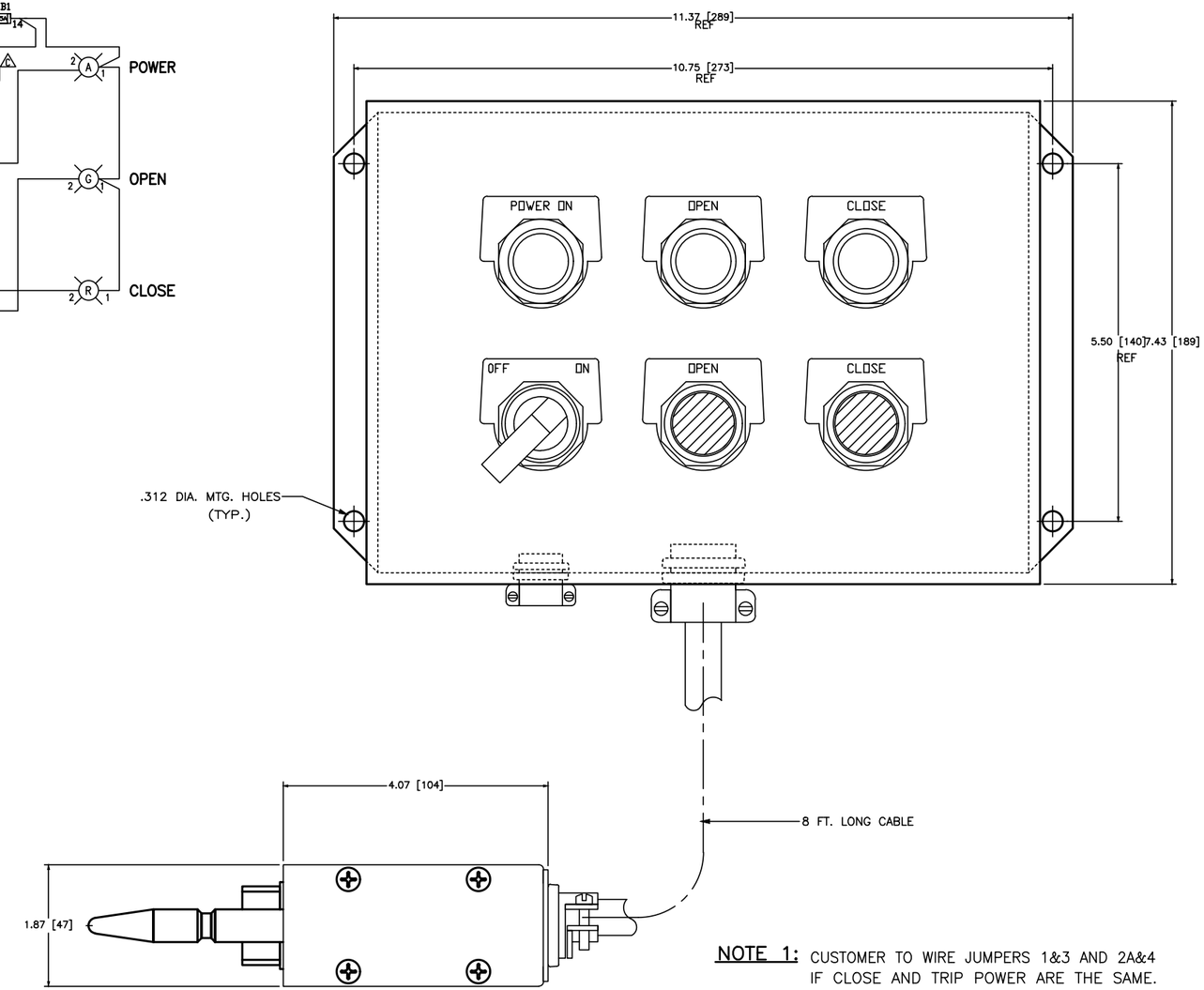

NOTE 1: CUSTOMER TO WIRE JUMPERS 1&3 AND 2A&4 IF CLOSE AND TRIP POWER ARE THE SAME.
REFERENCE DRAWINGS
46007–488–50 = ASSY 48VDC
51 = ASSY 120VAC/DC – DC TRIP
52 = ASSY 240VAC/DC – DC TRIP
46007–495 = WIRING DIAGRAM

JOB NAME:	BUILDING #22 RENOVATIONS	EQUIPMENT DESIGNATION:	PRIMARY SWITCH "A"
JOB LOCATION:	ALBANY NY	EQUIPMENT TYPE:	MASTERCLAD SWITCHGEAR
DRAWN BY:	CAD	DRAWING TYPE:	TEST CABINET
ENGR:	VAN N. NGUYEN		SQUARE D Schneider Electric
DATE:	FEBRUARY 02, 2006		
DRAWING STATUS:	RECORD	DWG# R21295878-003-03	PG 1 OF 1 REV –

REV	DESCRIPTION	BY	DATE	–	----	--	--/--/--
–	----	--	--/--/--	–	----	--	--/--/--

METALCLAD SWITCHGEAR
SERIES 5

FACTORY ORDER NO.		F0
RATED MAXIMUM VOLTAGE	kV	15.0
IMPULSE WITHSTAND (BIL)	kV	95
FREQUENCY	HZ	60
CONTINUOUS CURRENT	A	1200
MAX SHORT CIRCUIT CUR.	kA SYM	23

SQUARE D COMPANY
SMYRNA, TN USA
46006-801-01

JOB NAME:	BUILDING #22 RENOVATIONS	EQUIPMENT DESIGNATION:	PRIMARY SWITCH "A"
JOB LOCATION:	ALBANY NY	EQUIPMENT TYPE:	MASTERCLAD SWITCHGEAR
DRAWN BY:	CAD	DRAWING TYPE:	RATING NAMEPLATE
ENGR:	VAN N. NGUYEN		SQUARE D Schneider Electric
DATE:	FEBRUARY 02, 2006		
DRAWING STATUS:	RECORD	DWG# N21295878-003-01	PG 1 OF 1 REV –

Instruction Manuals

Printed 12/18/06 13:02:24 by MSMD67

Manual Quantity: 1

Part Number	Description	Supplier
241	INSTRUCTION MANUAL, INSTRUMENT AND CONTROL SERIES 24 SWITCH.	ELECTROSWITCH
2438D.PDF	CATALOG CUT	ELECTROSWITCH
6055-37	INSTRUCTION BULLETIN, TYPE VR ELECTRICALLY OPERATED GROUND AND TEST DEVICE.	SQUARE D COMPANY
6055-30	INSTRUCTION BULLETIN, INDOOR SWITCHGEAR,4.76-15.0KV METAL-CLAD SWITCHGEAR.	SQUARE D COMPANY
SER 7000	INSTRUCTION MANUAL, 7000 SERIES TIMING RELAY.	AGASTAT
URL: http://relays.tycoelectronics.com/datasheets/7000.pdf		
16010120	INSTRUCTION MANUAL750/760 FEEDER MANAGEMENT RELAY	GE/MULTILIN
URL: http://www.geindustrial.com/products/manuals/750/750man-a2.pdf		
7805D.PDF	Series 24 Manual Reset Lockout Relay catalog cut.	ELECTROSWITCH
LOR1	INSTRUCTION MANUAL LOR-1 LOCKOUT RELAYS.	ELECTROSWITCH
URL: http://www2.gocci.com/electroswitch/electroswitchesandrelays/technical_publications/lor1.pdf		
63230-301-202	INSTRUCTION BULLETIN, POWERLOGIC CIRCUIT MONITOR, SERIES 4250.	SQUARE D COMPANY
6055-31	INSTRUCTION BULLETIN, TYPE VR VACUUM CIRCUIT BREAKER, 4.76 KV, 8.25KV, AND 15KV, 1200 A AND 2000 A UP TO 41KA.	SQUARE D COMPANY

Attachment 4

REV	DESCRIPTION	BY	DATE							
A	REVISE FOR AUTOWIRE.	JR	06/30/06	–	----	--	--/--/--	–	----	--	--/--/--

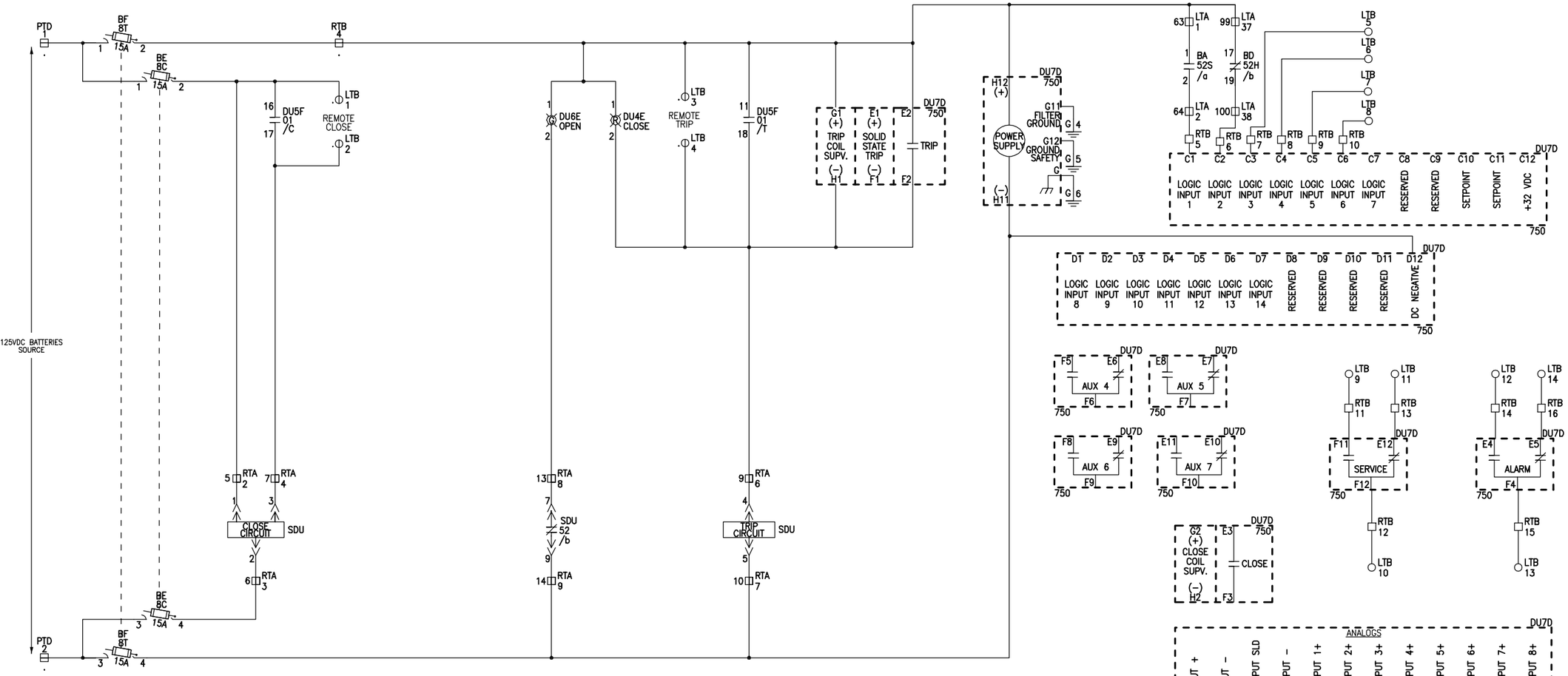

STATIONARY SWITCH CONTACTS (MOC–10)

◫ LTA= SPARE CONTACT WIRED TO CUSTOMER TERMINAL BLOCK

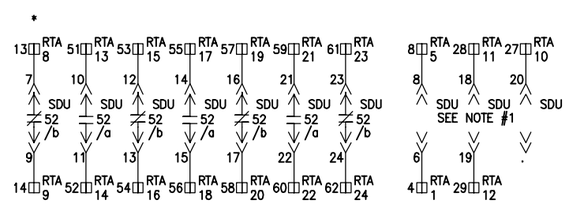

AUXILIARY CONTACTS

* = USED CONTACT

NOTE 1 = OPTIONAL CIRCUITS NOT SUPPLIED WITH BREAKER

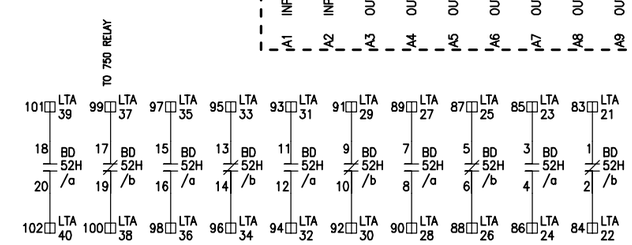

HOUSING SWITCH CONTACTS (TOC–10)

(SHOWN WITH BREAKER IN TEST OR WITHDRAWN POSITION)

◫ LTA= SPARE CONTACT WIRED TO CUSTOMER TERMINAL BLOCK

FEEDER SECTION 2 UPPER

JOB NAME:	BUILDING #22 RENOVATIONS	EQUIPMENT DESIGNATION:	**PRIMARY SWITCH "B"**
JOB LOCATION:	ALBANY NY	EQUIPMENT TYPE:	MASTERCLAD SWITCHGEAR
DRAWN BY:	CAD	DRAWING TYPE:	CONTROL SCHEMATIC
ENGR:	VAN N. NGUYEN		SQUARE D COMPANY Schneider Electric
DATE:	FEBRUARY 01, 2006		
DRAWING STATUS:	RECORD	DWG#	C21295878–002–02 PG 1 OF 2 REV A

REV	DESCRIPTION	BY	DATE							
A	REVISE FOR AUTOWIRE.	JR	06/30/06	–	----	--	--/--/--	–	----	--	--/--/--

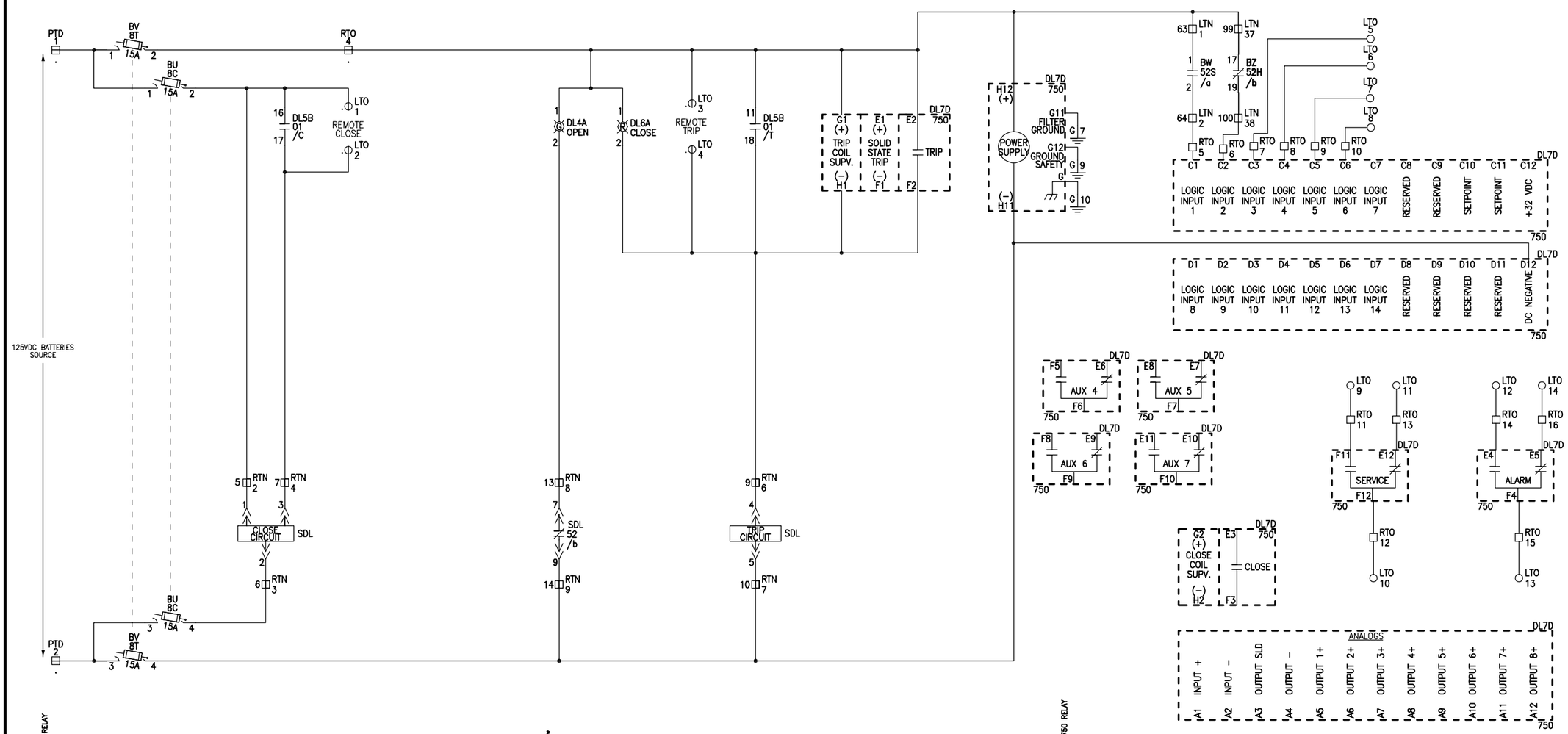

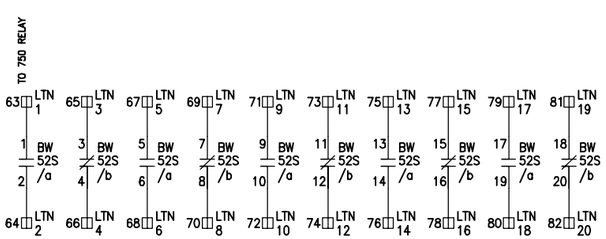

STATIONARY SWITCH CONTACTS (MOC–10)

◫ LTN= SPARE CONTACT WIRED TO CUSTOMER TERMINAL BLOCK

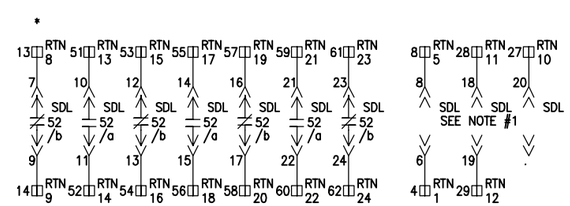

AUXILIARY CONTACTS

* = USED CONTACT

NOTE 1 = OPTIONAL CIRCUITS NOT SUPPLIED WITH BREAKER

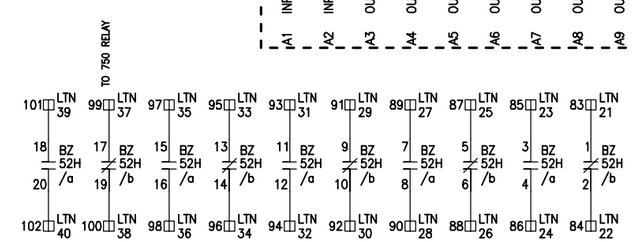

HOUSING SWITCH CONTACTS (TOC–10)

(SHOWN WITH BREAKER IN TEST OR WITHDRAWN POSITION)

◫ LTN= SPARE CONTACT WIRED TO CUSTOMER TERMINAL BLOCK

FEEDER SECTION 2 LOWER

JOB NAME:	BUILDING #22 RENOVATIONS	EQUIPMENT DESIGNATION:	**PRIMARY SWITCH "B"**
JOB LOCATION:	ALBANY NY	EQUIPMENT TYPE:	MASTERCLAD SWITCHGEAR
DRAWN BY:	CAD	DRAWING TYPE:	CONTROL SCHEMATIC
ENGR:	VAN N. NGUYEN		SQUARE D COMPANY Schneider Electric
DATE:	FEBRUARY 01, 2006		
DRAWING STATUS:	RECORD	DWG#	C21295878–002–02 PG 2 OF 2 REV A

REV	DESCRIPTION	BY	DATE									
A	ADD ELECTRICAL INTERLOCK WITH TIE A & TIE B	VN	05/15/06	B	ADD DEV. 86	VN	06/05/06	–	----	--	--/--/--
				C	REVISE FOR AUTOWIRE.	JR	06/30/06	–	----	--	--/--/--

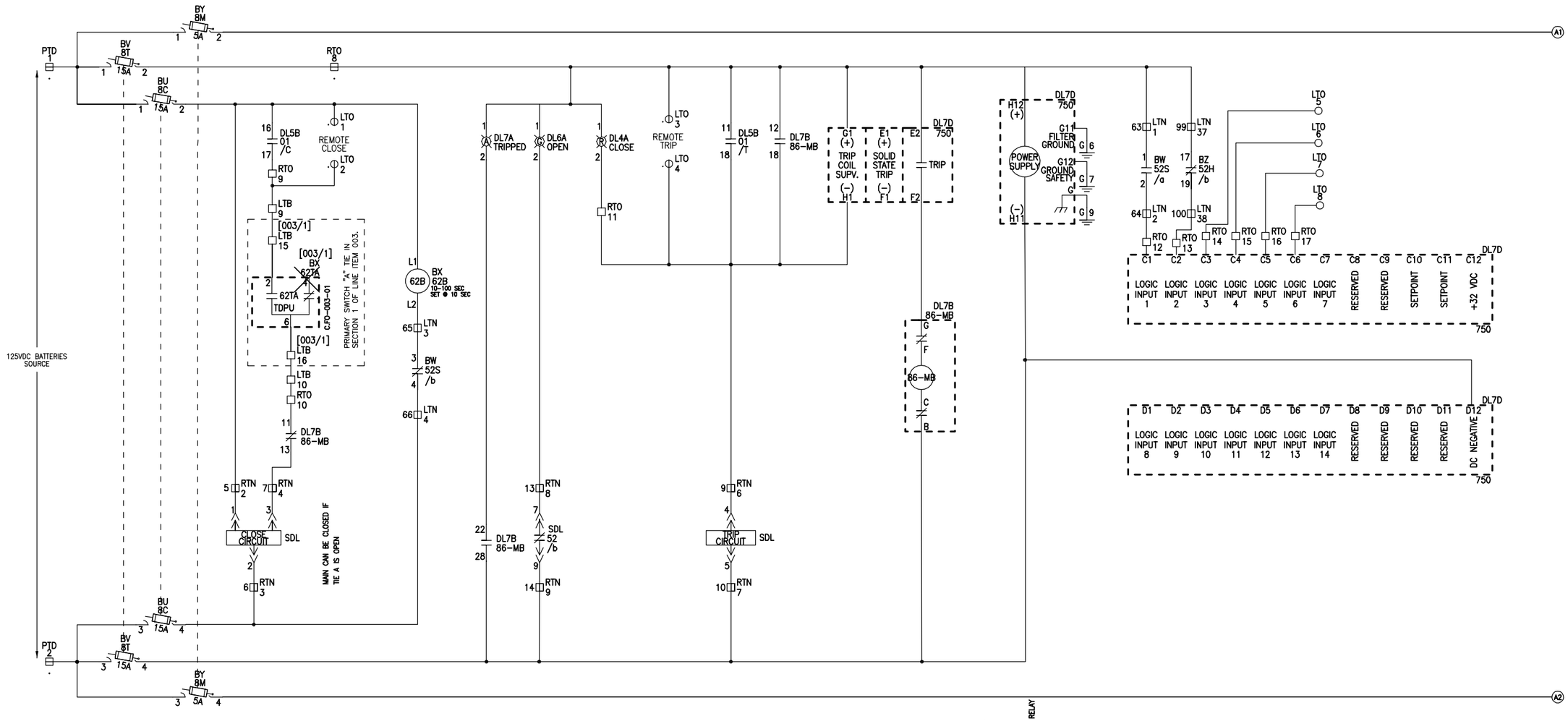

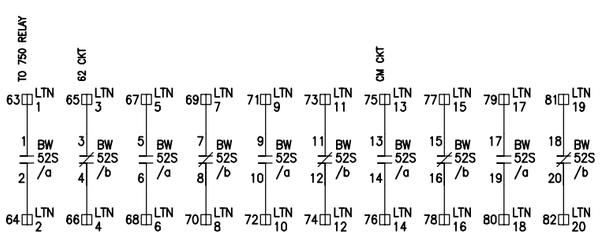

STATIONARY SWITCH CONTACTS (MOC–10)

LTN= SPARE CONTACT WIRED TO CUSTOMER TERMINAL BLOCK

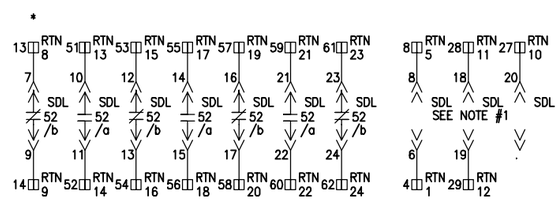

AUXILIARY CONTACTS

* = USED CONTACT

NOTE 1 = OPTIONAL CIRCUITS NOT SUPPLIED WITH BREAKER

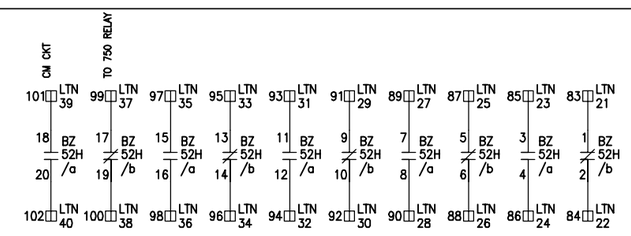

HOUSING SWITCH CONTACTS (TOC–10)

(SHOWN WITH BREAKER IN TEST OR WITHDRAWN POSITION)

LTN= SPARE CONTACT WIRED TO CUSTOMER TERMINAL BLOCK

MAIN B
SECTION 3 LOWER

JOB NAME:	BUILDING #22 RENOVATIONS	EQUIPMENT DESIGNATION:	PRIMARY SWITCH "B"
JOB LOCATION:	ALBANY NY	EQUIPMENT TYPE:	MASTERCLAD SWITCHGEAR
DRAWN BY:	CAD	DRAWING TYPE:	CONTROL SCHEMATIC
ENGR:	VAN N. NGUYEN		SQUARE D COMPANY Schneider Electric
DATE:	FEBRUARY 01, 2006		
DRAWING STATUS:	RECORD	DWG# C21295878–002–03	PG 1 OF 2 REV C

REV	DESCRIPTION	BY	DATE									
				A	REVISE FOR AUTOWIRE.	JR	6/30/06	–	----	--	--/--/--
				–	----	--	--/--/--	–	----	--	--/--/--

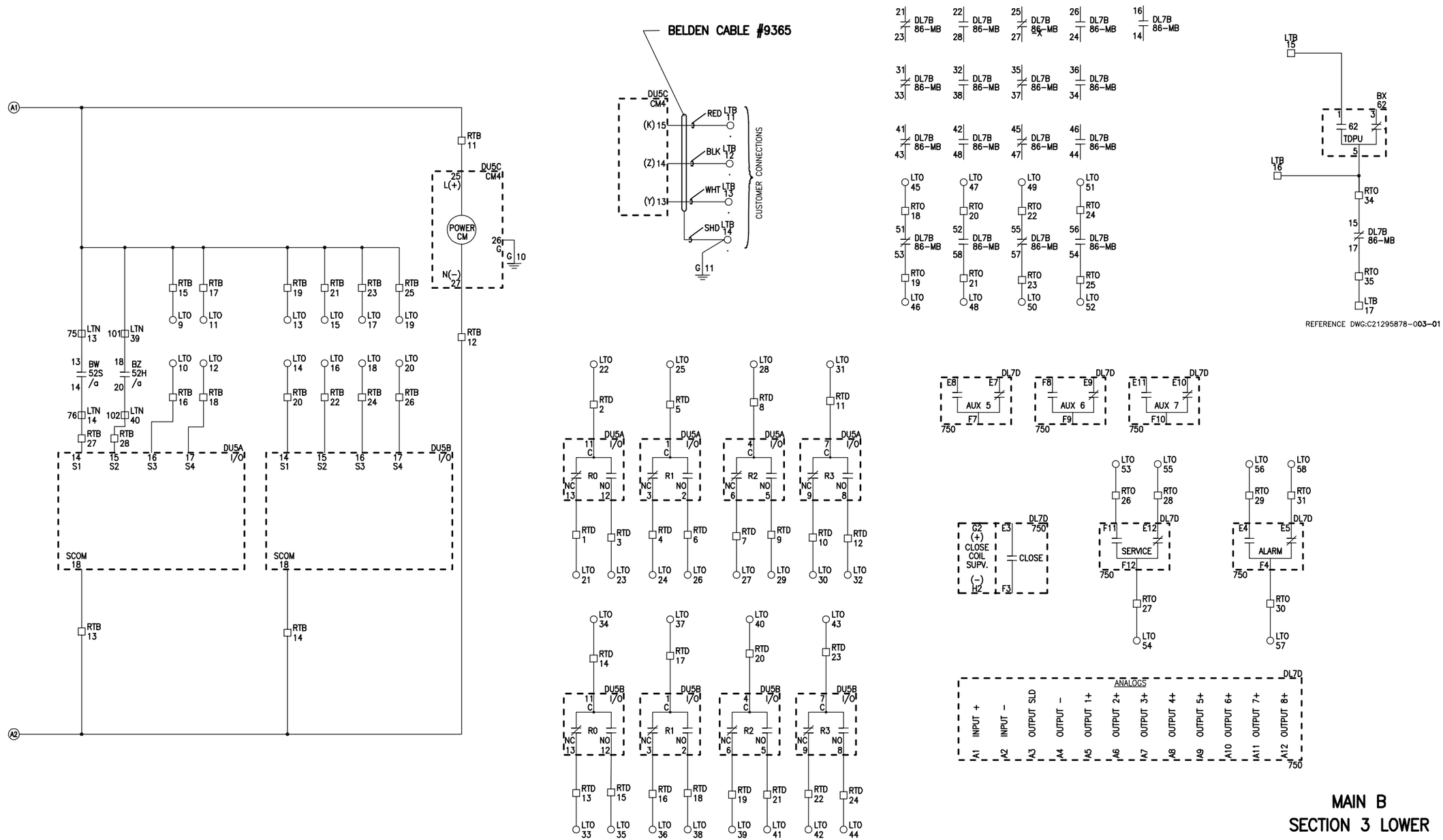

MAIN B
SECTION 3 LOWER

JOB NAME:	BUILDING #22 RENOVATIONS	EQUIPMENT DESIGNATION:	PRIMARY SWITCH "B"
JOB LOCATION:	ALBANY NY	EQUIPMENT TYPE:	MASTERCLAD SWITCHGEAR
DRAWN BY:	CAD	DRAWING TYPE:	CONTROL SCHEMATIC
ENGR:	VAN N. NGUYEN		SQUARE D COMPANY Schneider Electric
DATE:	FEBRUARY 01, 2006		
DRAWING STATUS:	RECORD	DWG# C21295878-002-03	PG 2 OF 2 REV A

REV	DESCRIPTION	BY	DATE									
A	ADD 750 RELAY	VN	05/15/06	B	ADD 86 CONTACTS	VN	06/06/06	–	----	--	--/--/--
				C	REVISE FOR AUTOWIRE.	JR	06/30/06	–	----	--	--/--/--

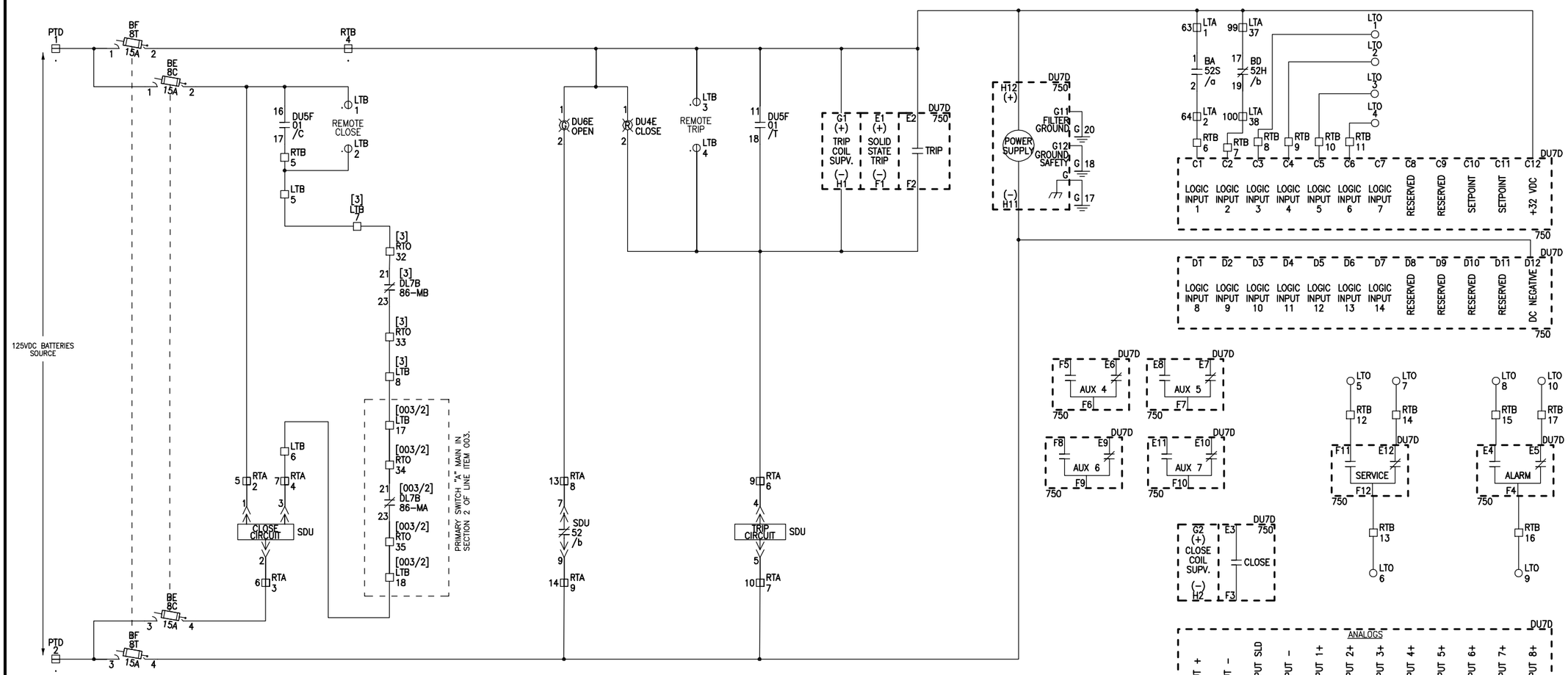

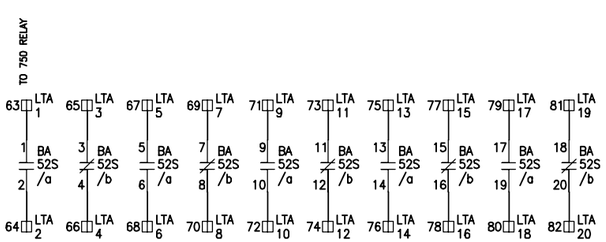

STATIONARY SWITCH CONTACTS (MOC–10)

◫ LTA= SPARE CONTACT WIRED TO CUSTOMER TERMINAL BLOCK

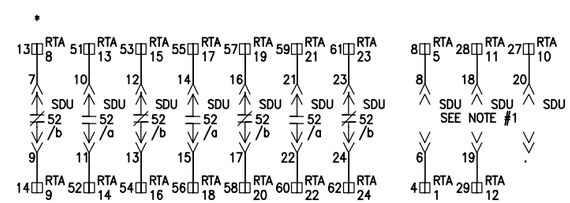

AUXILIARY CONTACTS

* = USED CONTACT

NOTE 1 = OPTIONAL CIRCUITS NOT SUPPLIED WITH BREAKER

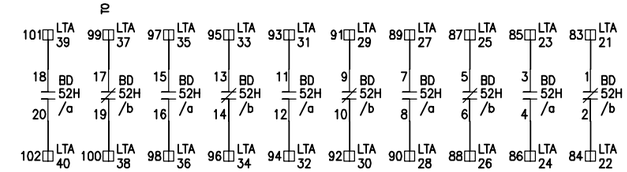

HOUSING SWITCH CONTACTS (TOC–10)

(SHOWN WITH BREAKER IN TEST OR WITHDRAWN POSITION)

◫ LTA= SPARE CONTACT WIRED TO CUSTOMER TERMINAL BLOCK

TIE B
SECTION 4 UPPER

JOB NAME:	BUILDING #22 RENOVATIONS	EQUIPMENT DESIGNATION:	**PRIMARY SWITCH "B"**
JOB LOCATION:	ALBANY NY	EQUIPMENT TYPE:	MASTERCLAD SWITCHGEAR
DRAWN BY:	CAD	DRAWING TYPE:	CONTROL SCHEMATIC
ENGR:	VAN N. NGUYEN		SQUARE D COMPANY Schneider Electric
DATE:	FEBRUARY 01, 2006		
DRAWING STATUS:	RECORD	DWG#	C21295878-002-04 PG 1 OF 1 REV C

REV	DESCRIPTION	BY	DATE	–	----	--	--/--/--	–	----	--	--/--/--
A	REVISE FOR AUTOWIRE.	JR	06/29/06	–	----	--	--/--/--	–	----	--	--/--/--

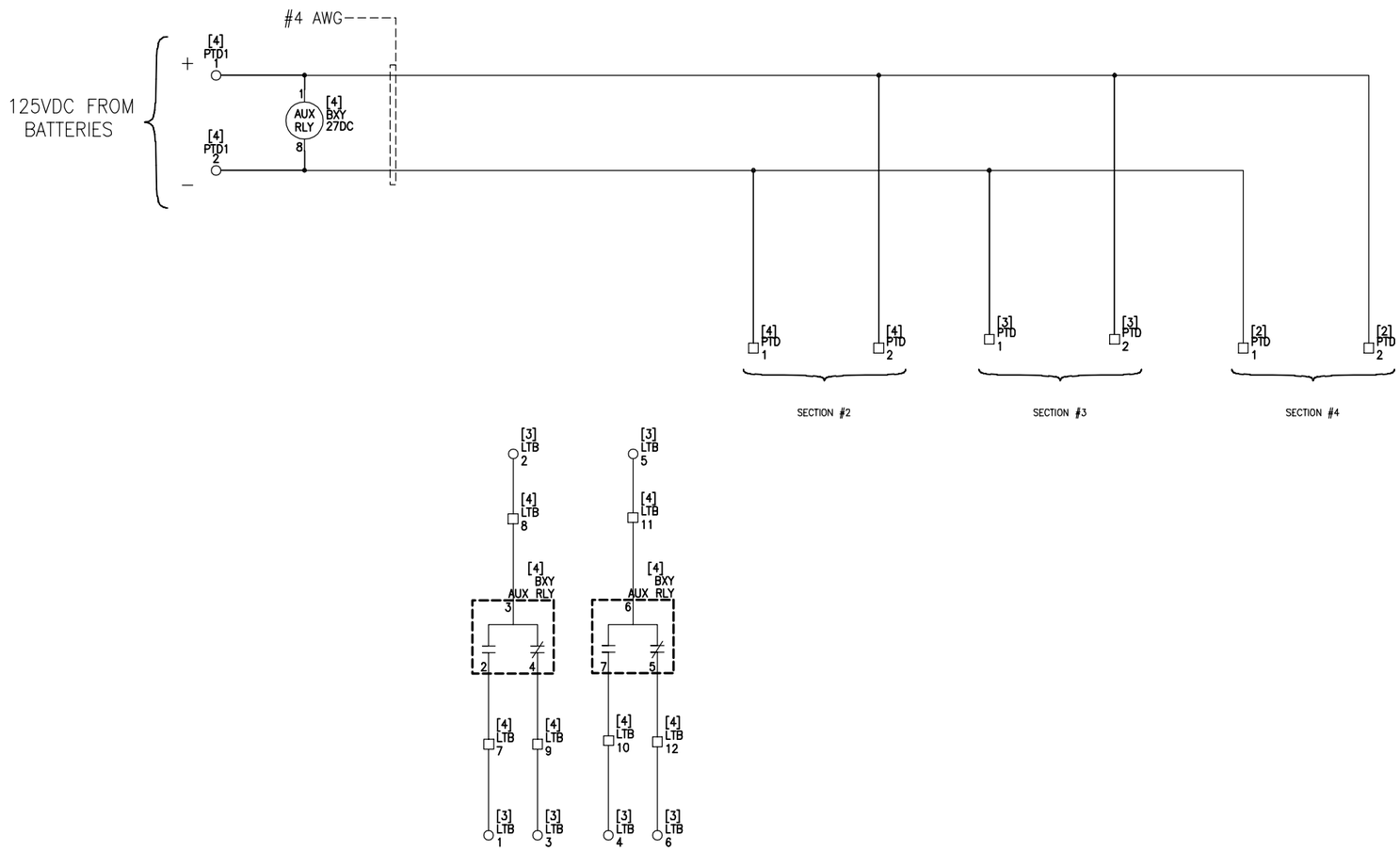

125VDC VOLTAGE SENSOR RELAY
PICK–UP 92–140VDC
DROP–OUT 90–138VDC

JOB NAME:	BUILDING #22 RENOVATIONS	EQUIPMENT DESIGNATION:	**PRIMARY SWITCH "B"**
JOB LOCATION:	ALBANY NY	EQUIPMENT TYPE:	MASTERCLAD SWITCHGEAR
DRAWN BY:	CAD	DRAWING TYPE:	CONTROL SCHEMATIC
ENGR:	VAN N. NGUYEN		SQUARE D COMPANY Schneider Electric
DATE:	FEBRUARY 01, 2006		
DRAWING STATUS:	RECORD	DWG# **C21295878–002–AL**	PG 1 OF 1 REV A

REV	DESCRIPTION	BY	DATE								
B	REVISED TEXT.	JR	06/29/06	–	----	--	--/--/--
A	ADD COMM. CM4000	VNN	05/16/06	–	----	--	--/--/--	–	----	--	--/--/--

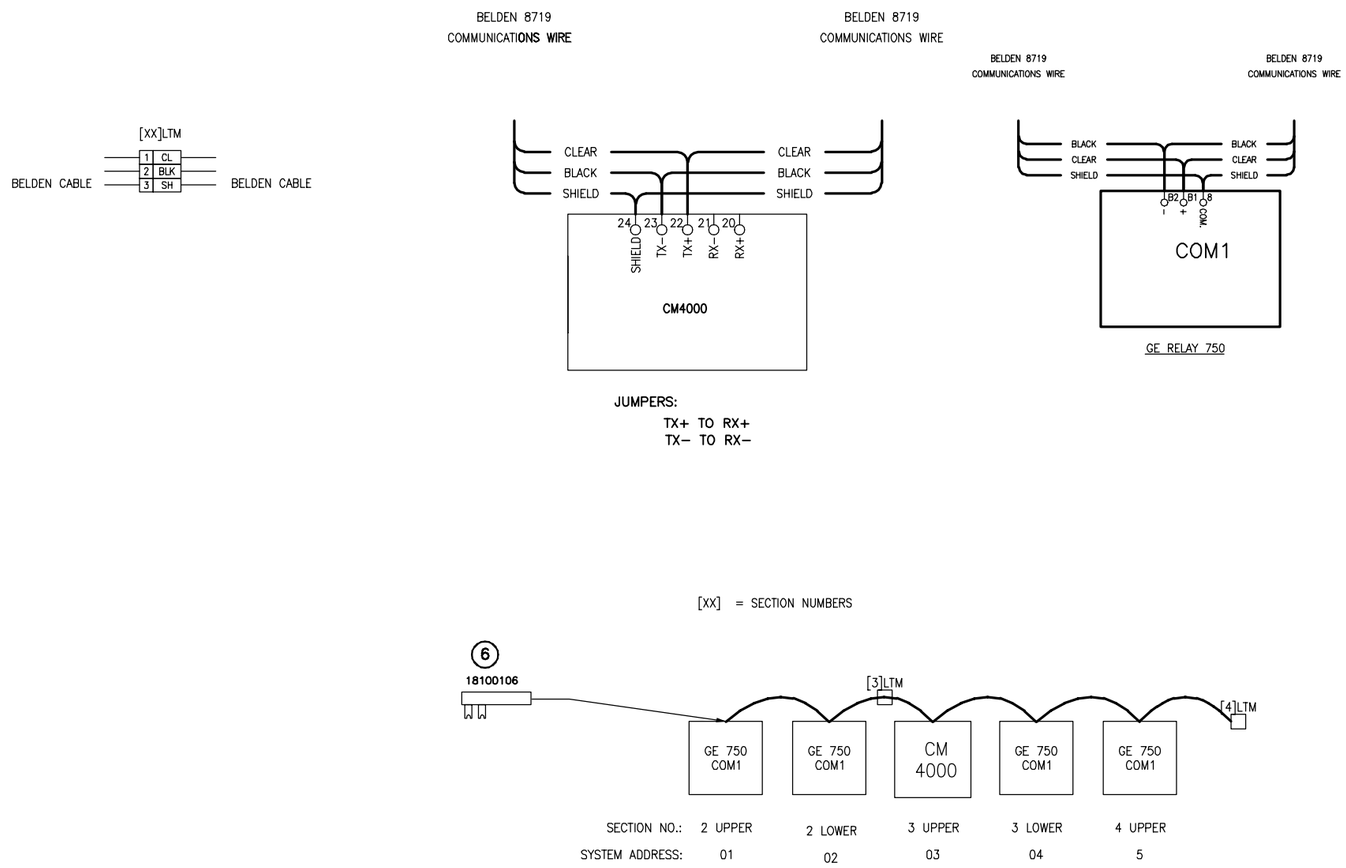

JOB NAME:	BUILDING #22 RENOVATIONS	EQUIPMENT DESIGNATION:	**PRIMARY SWITCH "B"**
JOB LOCATION:	ALBANY NY	EQUIPMENT TYPE:	MASTERCLAD SWITCHGEAR
DRAWN BY:	CAD	DRAWING TYPE:	COMMUNICATION SCHEMATIC
ENGR:	VAN N. NGUYEN		SQUARE D COMPANY Schneider Electric
DATE:	FEBRUARY 01, 2006		
DRAWING STATUS:	RECORD	DWG# **C21295878-002-CM**	PG 1 OF 1 REV B

REV	DESCRIPTION	BY	DATE	–	----	--	--/--	–	----	--	--/--
A	REVISE TEXT.	JR	06/29/06	–	----	--	--/--	–	----	--	--/--

SYMBOL KEY

ZAN=ANSI DEVICE FUNCTION/TERMINAL NUMBER PER ANSI C37.02/.11 OR CUSTOMER ASSIGNED DESIGNATION

ZDN=DEVICE WIRING DESIGNATION (ASSIGNED BY SQUARE D)

ZTN=DEVICE ACTUAL TERMINAL NUMBER

LEGEND

G	GREEN PILOT LIGHT
R	RED PILOT LIGHT
01	CONTROL SWITCH
LTA/N	CUSTOMER TERMINAL BLOCK
LTI	MAIN INTERCONNECTION TERM. BLOCK
PTA	3 POLE AC POWER TERMINAL BLOCK
PTD	2 POLE DC POWER TERMINAL BLOCK
RTA/N	BREAKER TERMINAL BLOCK
RT*	TERMINAL BLOCK
SDU/L	SECONDARY DISCONNECT
52/a	AUXILIARY CONTACT, OPEN WHEN BREAKER OPEN
52/b	AUXILIARY CONTACT, CLOSED WHEN BREAKER OPEN
52S	MECHANISM OPERATED (STATIONARY) CONTACT
52H	TRUCK OPERATED (HOUSING) CONTACT
LA	LIGHTNING ARRESTER
SCTB	SHORTING CURRENT TERMINAL BLOCK
8C	CLOSE CIRCUIT DISCONNECT
8T	TRIP CIRCUIT DISCONNECT
SEPAM	OVERCURRENT RELAY

DU5F/DL5B
01

(XXX) CONTACTS	DECK	POSITIONS TRIP	NORMAL	CLOSE
11 | | 18	1	X		
16 | | 17				X

ES0001.1

DL7B
86

DECK	CONTACT	(XXX) 86– CONTACTS	POSITION TRIP	RESET
1	1	11 ○–||–○ 13		X
	2	12 ○–||–○ 18	X	
	3	15 ○–||–○ 17		X
	4	16 ○–||–○ 14	X	
2	5	21 ○–||–○ 23		X
	6	22 ○–||–○ 28	X	
	7	25 ○–||–○ 27		X
	8	26 ○–||–○ 24	X	
3	9	31 ○–||–○ 33		X
	10	32 ○–||–○ 38	X	
	11	35 ○–||–○ 37		X
	12	36 ○–||–○ 34	X	
4	13	41 ○–||–○ 43		X
	14	42 ○–||–○ 48	X	
	15	45 ○–||–○ 47		X
	16	46 ○–||–○ 44	X	
5	17	51 ○–||–○ 53		X
	18	52 ○–||–○ 58	X	
	19	55 ○–||–○ 57		X
	20	56 ○–||–○ 54	X	

ES0023.1

LEGENDS AND DEVELOPMENTS

JOB NAME:	BUILDING #22 RENOVATIONS	EQUIPMENT DESIGNATION:	PRIMARY SWITCH "B"
JOB LOCATION:	ALBANY NY	EQUIPMENT TYPE:	MASTERCLAD SWITCHGEAR
DRAWN BY:	CAD	DRAWING TYPE:	INFORMATION
ENGR:	VAN N. NGUYEN		SQUARE D COMPANY Schneider Electric
DATE:	FEBRUARY 01, 2006		
DRAWING STATUS:	RECORD	DWG# C21295878-003-IF	PG 1 OF 1 REV A

REV	DESCRIPTION	BY	DATE										
A	ADD CM4000, 750	VN	05/16/06	B	ADD BUS LIGHTS	VN	06/05/06	-	----	--	--/--/--
				-	----	--	--/--/--	-	----	--	--/--/--

SECTION 2

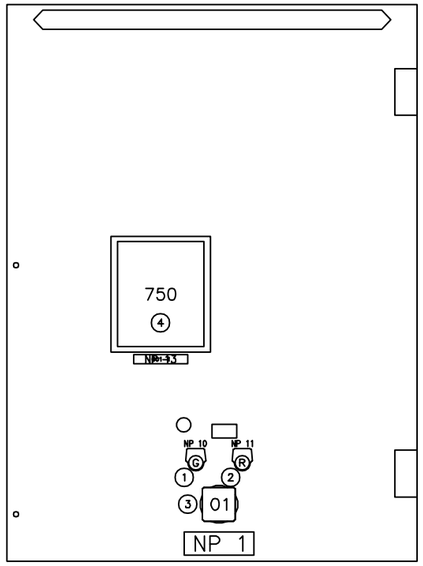

UPPER DOOR DETAIL DRS-00000-02452

SECTION 3

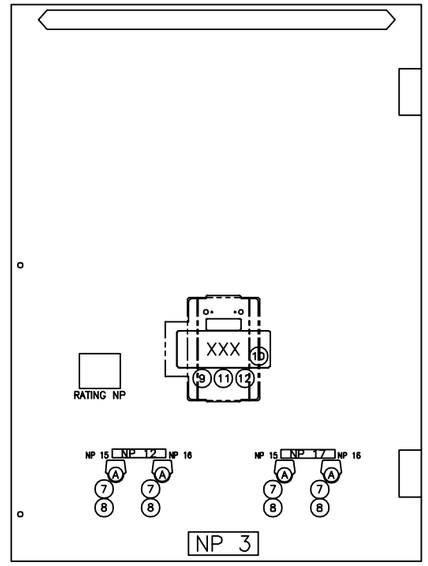

UPPER DOOR DETAIL DRS-00000-02454

SECTION 4

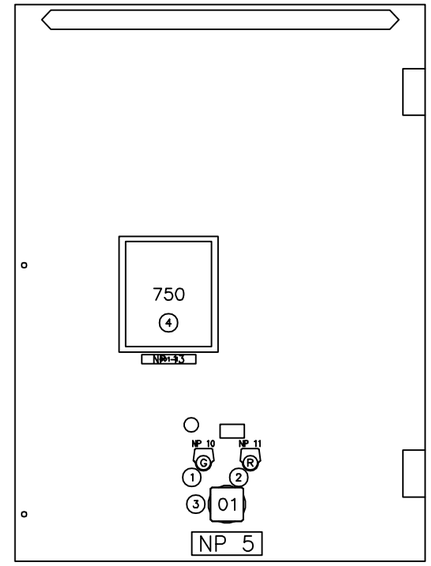

UPPER DOOR DETAIL DRS-00000-02452

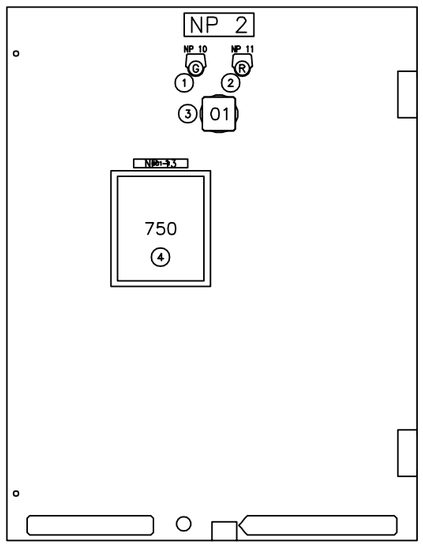

LOWER DOOR DETAIL DRS-00000-02453

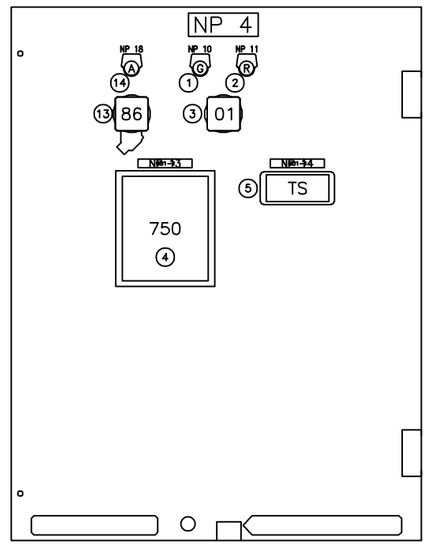

LOWER DOOR DETAIL DRS-00000-02455

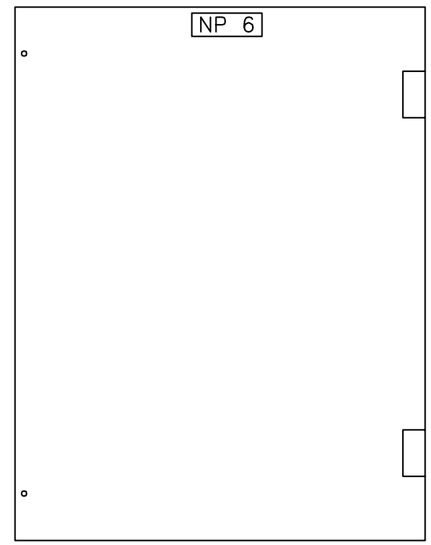

LOWER DOOR DETAIL 46007-335-01

JOB NAME:	BUILDING #22 RENOVATIONS	EQUIPMENT DESIGNATION:	PRIMARY SWITCH "B"
JOB LOCATION:	ALBANY NY	EQUIPMENT TYPE:	MASTERCLAD SWITCHGEAR
DRAWN BY:	CAD	DRAWING TYPE:	DOOR DETAIL VIEWS
ENGR:	VAN N. NGUYEN	SQUARE D Schneider Electric	
DATE:	FEBRUARY 01, 2006		
DRAWING STATUS:	RECORD	DWG# D21295878-002-51	PG 1 OF 2 REV B

REV	DESCRIPTION	BY	DATE								
B	ADD BUS VT'S	VN	06/05/06	-	----	--	--/--/--
A	DELETE CPT	VN	05/17/06	-	----	--	--/--/--	-	----	--	--/--/--

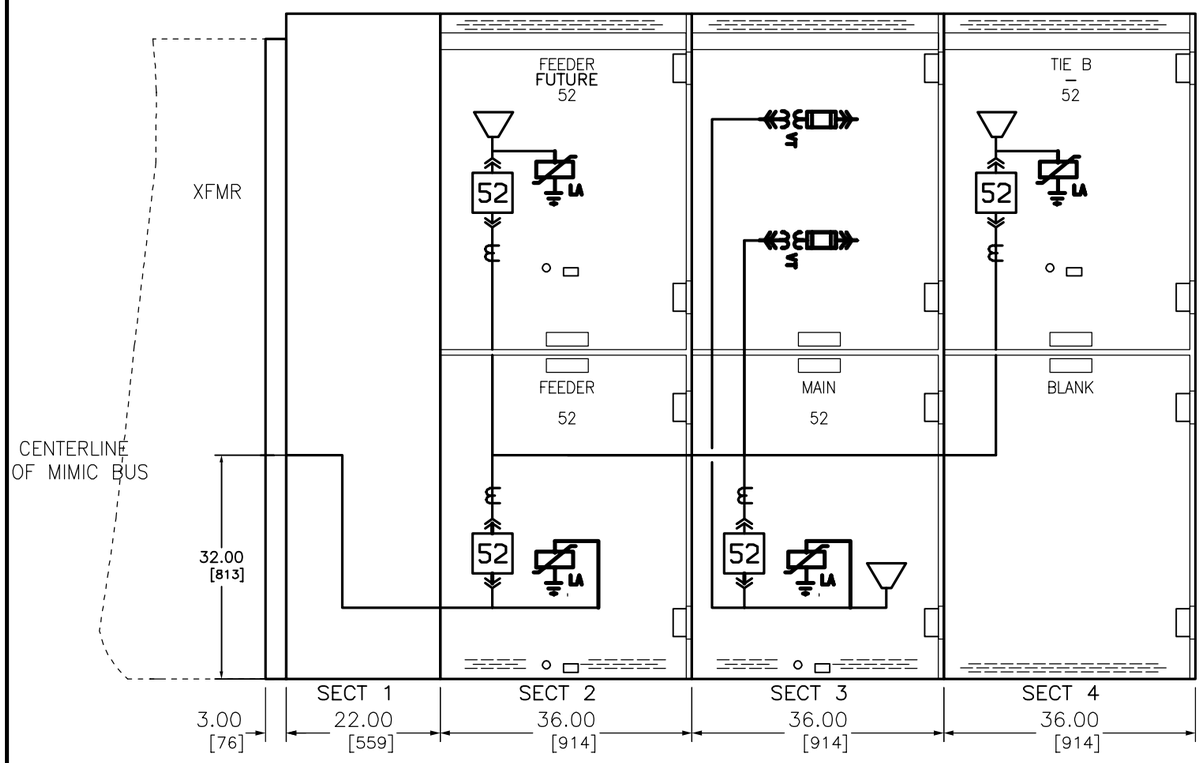

MIMIC BUS
BLACK, ENGRAVED STRIP

DUAL DIMENSIONS: INCHES
MILLIMETERS

JOB NAME:	BUILDING #22 RENOVATIONS	EQUIPMENT DESIGNATION:	**PRIMARY SWITCH "B"**
JOB LOCATION:	ALBANY NY	EQUIPMENT TYPE:	MASTERCLAD SWITCHGEAR
DRAWN BY:	CAD	DRAWING TYPE:	MIMIC BUS
ENGR:	VAN N. NGUYEN		SQUARE D Schneider Electric
DATE:	FEBRUARY 01, 2006		
DRAWING STATUS:	RECORD	DWG# **D21295878-002-51**	PG **2** OF **2** REV B

REV	DESCRIPTION	BY	DATE							
–	----	--	--/--/--	–	----	--	--/--/--	–	----	--	--/--/--
				–	----	--	--/--/--	–	----	--	--/--/--

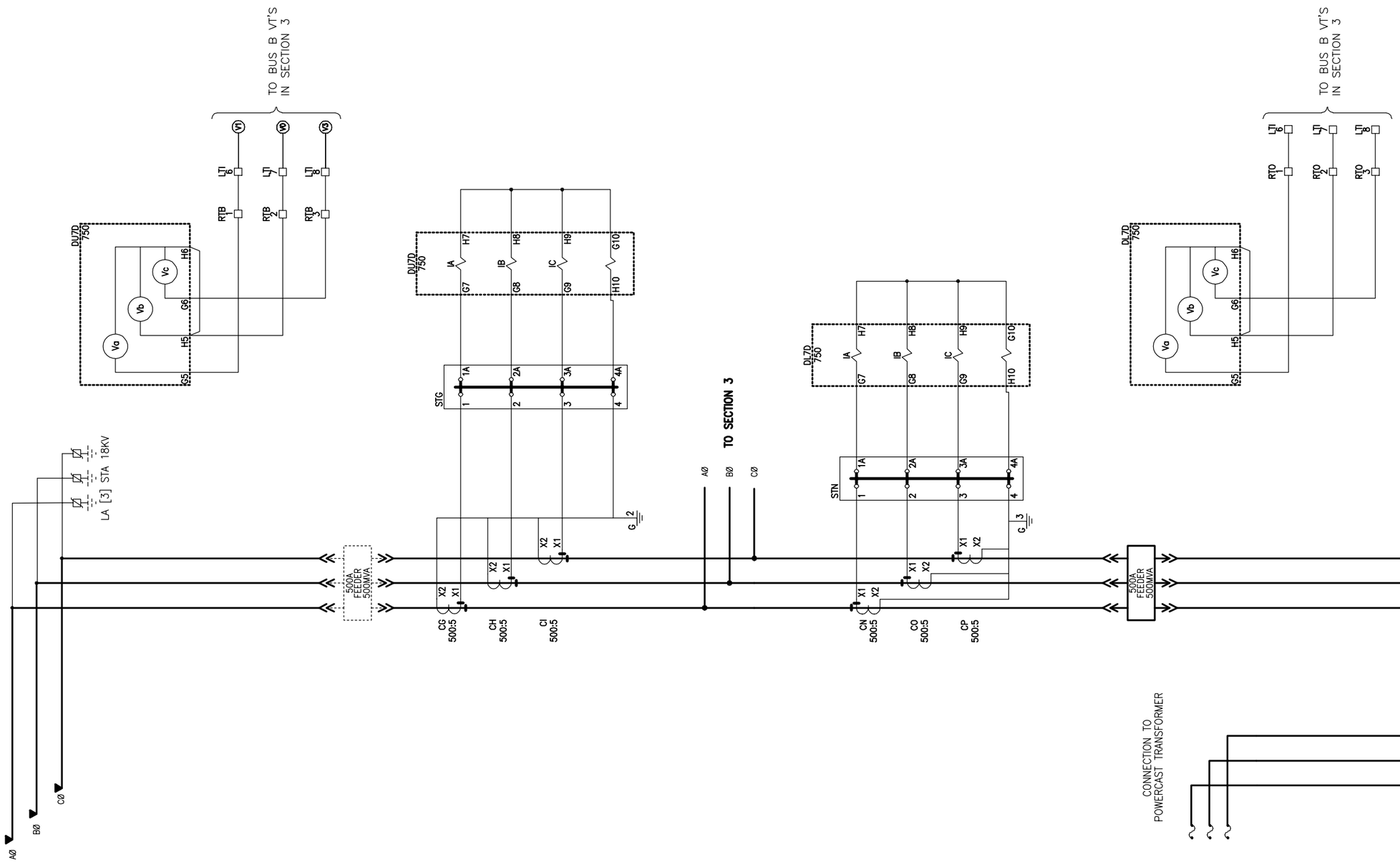

JOB NAME:	BUILDING #22 RENOVATIONS	EQUIPMENT DESIGNATION:	PRIMARY SWITCH "B"
JOB LOCATION:	ALBANY, NY	EQUIPMENT TYPE:	MASTERCLAD SWITCHGEAR
DRAWN BY:	J.RUSH	DRAWING TYPE:	ELECTRICAL DIAGRAMS
ENGR:	VAN N. NGUYEN		SQUARE D Schneider Electric
DATE:	JUNE 26, 2006		
DRAWING STATUS:	RECORD	DWG# E21295878-002-02	PG 1 OF 1 REV –

REV	DESCRIPTION	BY	DATE							
—	----	--	--/--/--	—	----	--	--/--/--	—	----	--	--/--/--

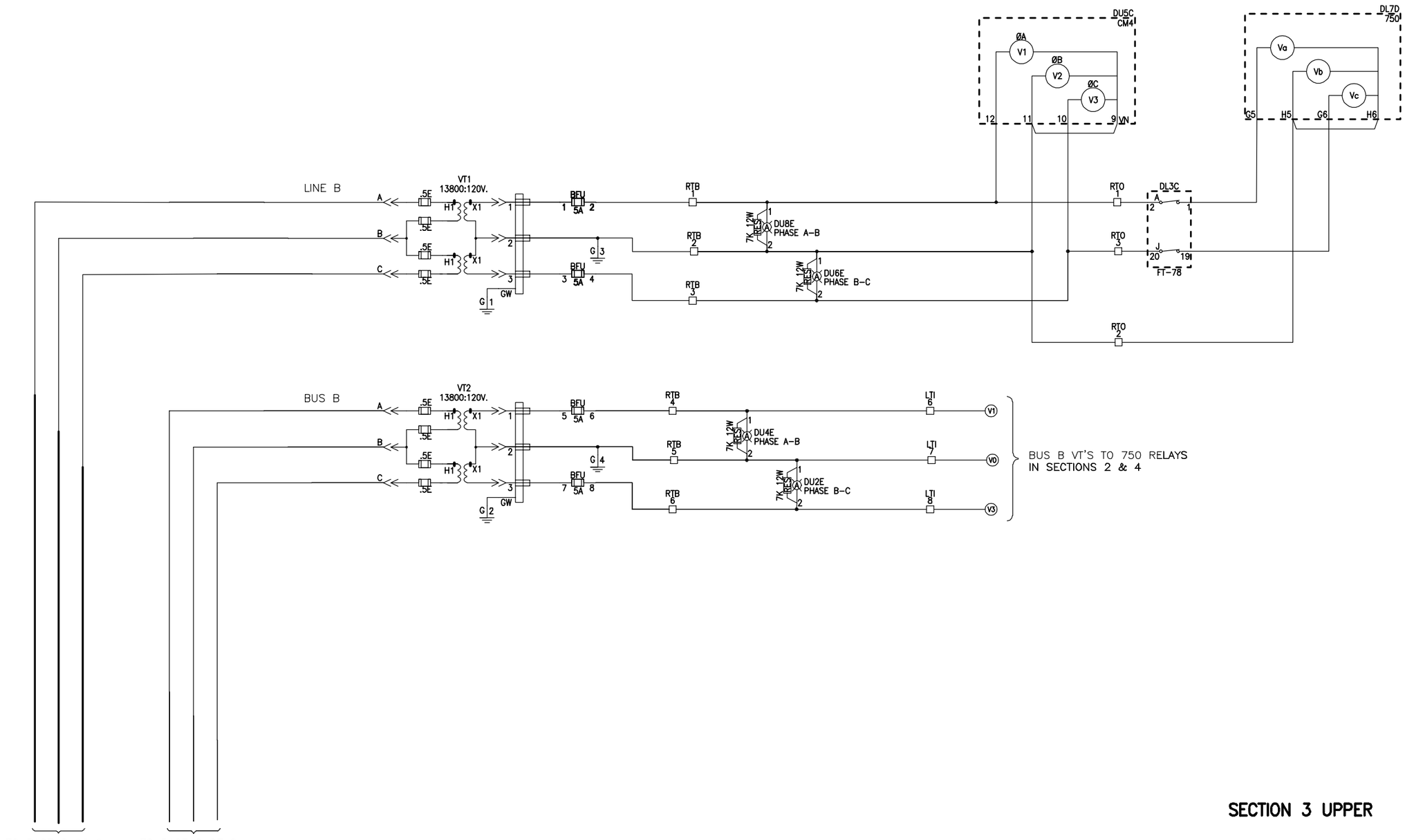

SECTION 3 UPPER

JOB NAME:	BUILDING #22 RENOVATIONS	EQUIPMENT DESIGNATION:	**PRIMARY SWITCH "B"**
JOB LOCATION:	ALBANY, NY	EQUIPMENT TYPE:	MASTERCLAD SWITCHGEAR
DRAWN BY:	J.RUSH	DRAWING TYPE:	THREE LINE DIAGRAM
ENGR:	VAN N. NGUYEN		SQUARE D COMPANY Schneider Electric
DATE:	JUNE 26, 2006		
DRAWING STATUS:	RECORD	DWG# E21295878-002-03	PG 1 OF 2 REV —

REV	DESCRIPTION	BY	DATE							
—	----	--	--/--/--	—	----	--	--/--/--	—	----	--	--/--/--

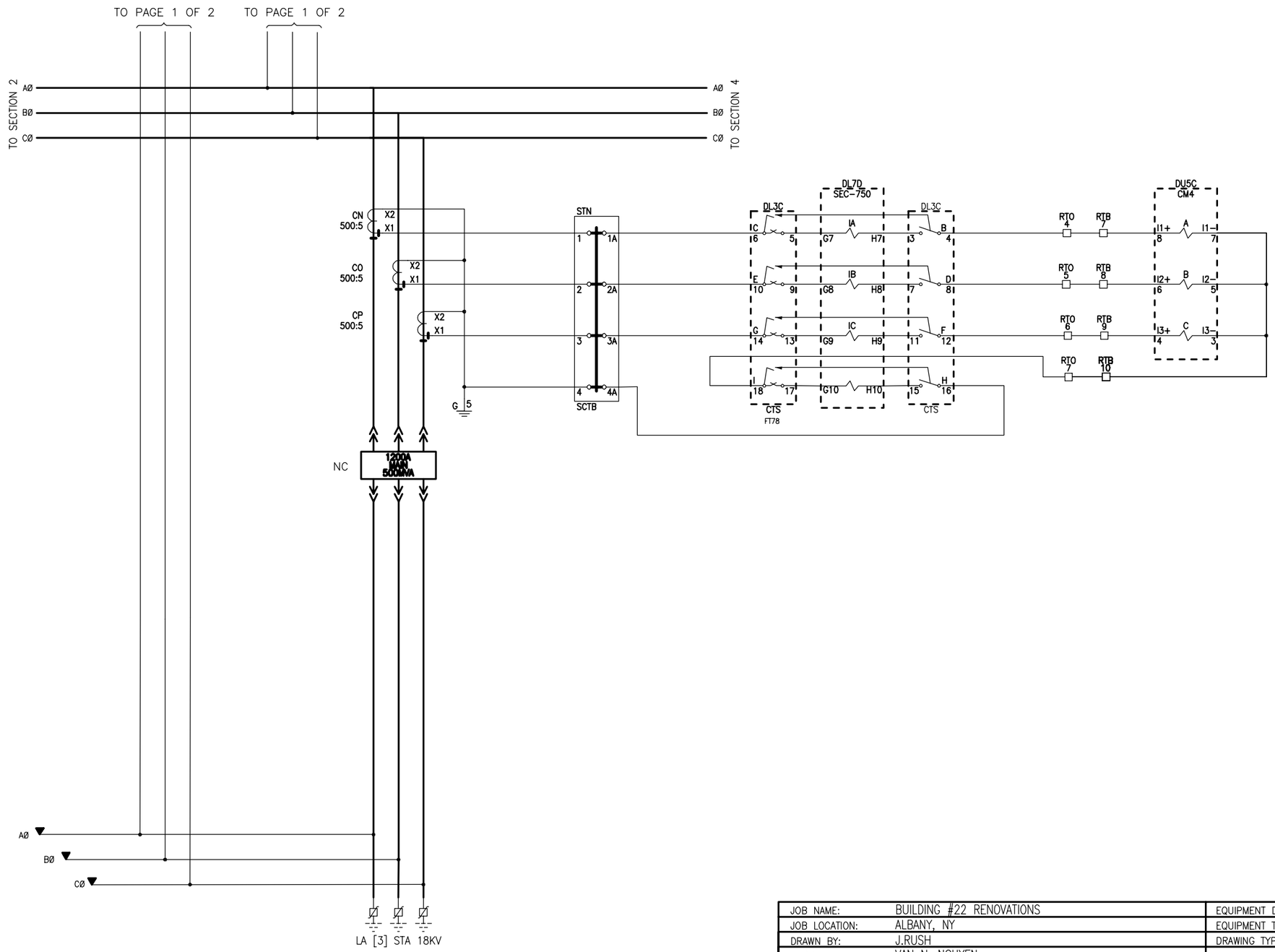

SECTION 3 LOWER

JOB NAME:	BUILDING #22 RENOVATIONS	EQUIPMENT DESIGNATION:	PRIMARY SWITCH "B"
JOB LOCATION:	ALBANY, NY	EQUIPMENT TYPE:	MASTERCLAD SWITCHGEAR
DRAWN BY:	J.RUSH	DRAWING TYPE:	THREE LINE DIAGRAM
ENGR:	VAN N. NGUYEN		SQUARE D COMPANY Schneider Electric
DATE:	JUNE 26, 2006		
DRAWING STATUS:	RECORD	DWG# E21295878-002-03	PG 2 OF 2 REV —

REV	DESCRIPTION	BY	DATE								
–	----	--	--/--/--	–	----	--	--/--/--	–	----	--	--/--/--

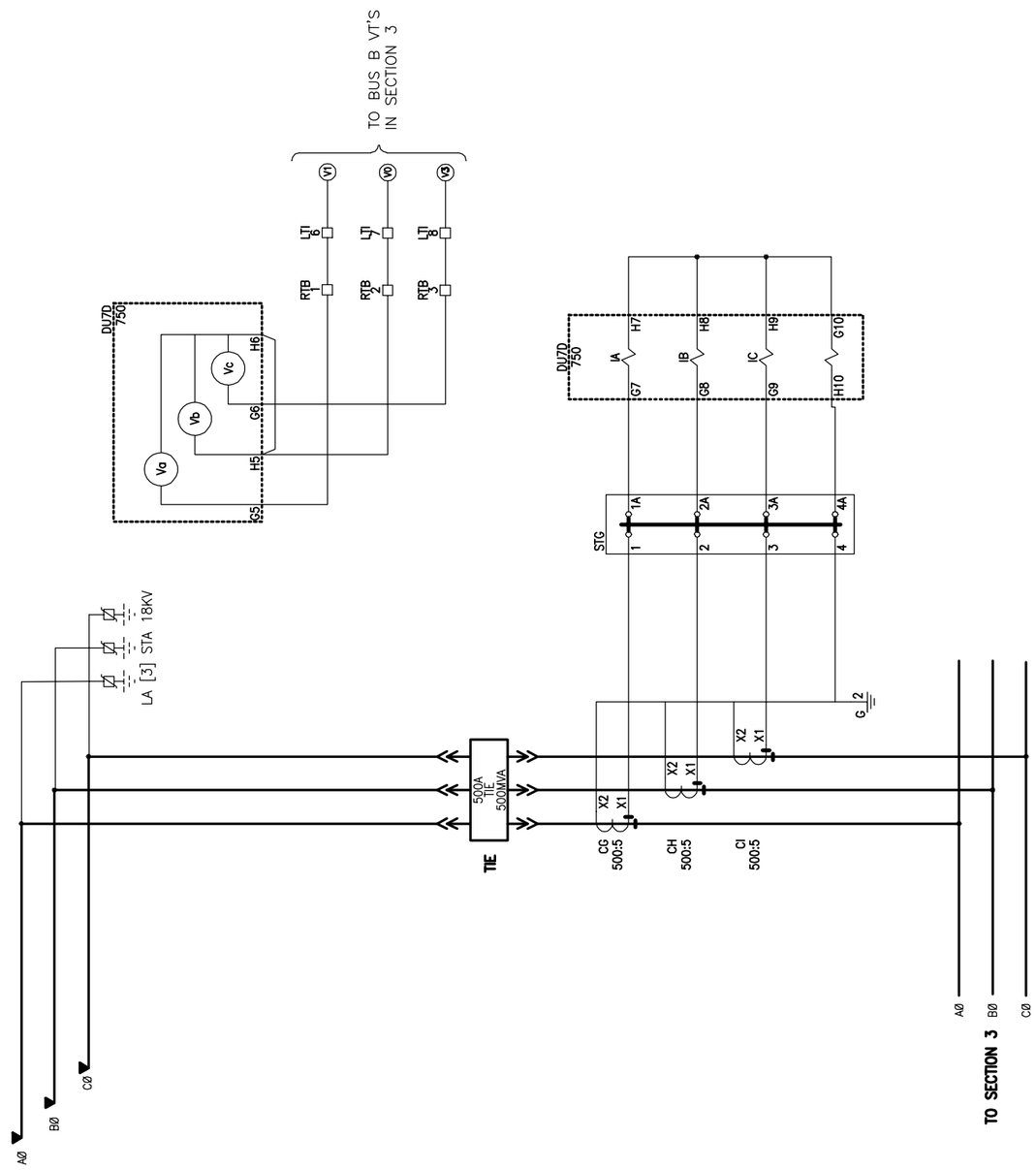

SECTION 4

JOB NAME:	BUILDING #22 RENOVATIONS	EQUIPMENT DESIGNATION:	PRIMARY SWITCH "B"
JOB LOCATION:	ALBANY, NY	EQUIPMENT TYPE:	MASTERCLAD SWITCHGEAR
DRAWN BY:	J.RUSH	DRAWING TYPE:	ELEMENTARY DIAGRAMS
ENGR:	VAN N. NGUYEN		SQUARE D Schneider Electric
DATE:	JUNE 26, 2006		
DRAWING STATUS:	RECORD	DWG# E21295878-002-04	PG 1 OF 1 REV –

REV	DESCRIPTION	BY	DATE								
B	ADD BUS VT'S	VN	06/05/06	–	----					--	--/--/--
A	REMOVE CPT'S	VN	05/16/06	–	----	--	--/--/--	–	----	--	--/--/--

FO #21295878-002

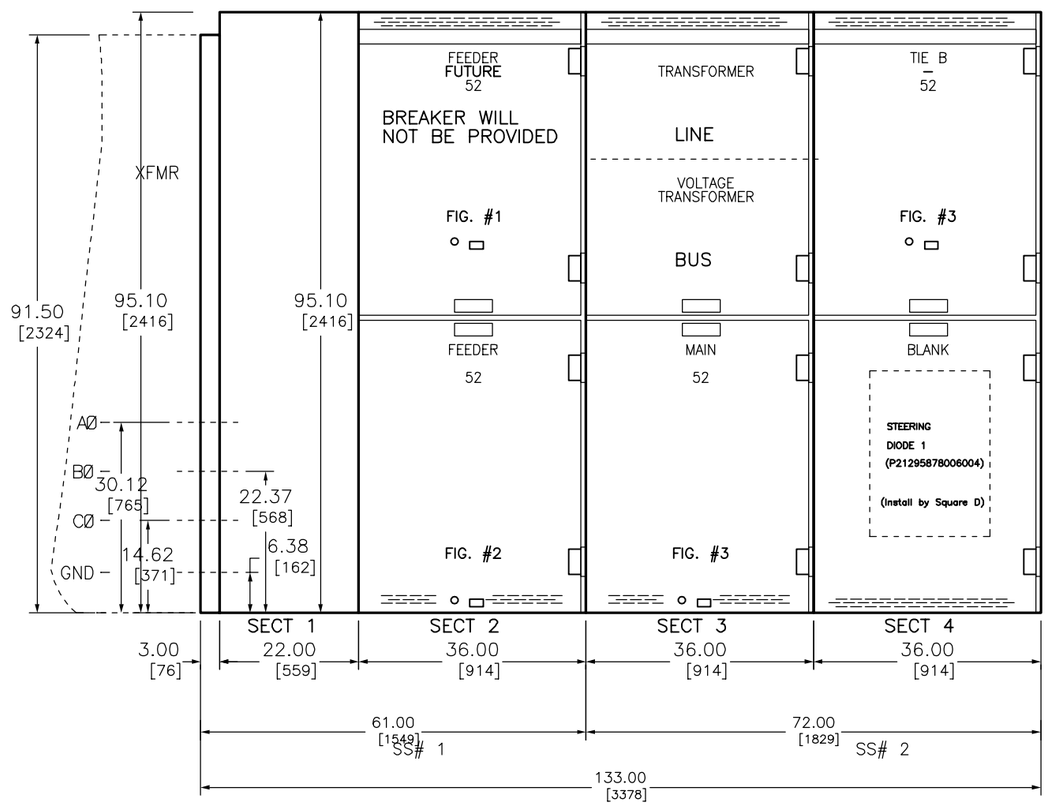

FIG. # REFERS TO
ELECTRICAL GROUND AND TEST DEVICE
SEE DWG. 46008-520 OR R21295878-002-02
FOR CELL INTERLOCK LOCATIONS.

FO #21295878-003

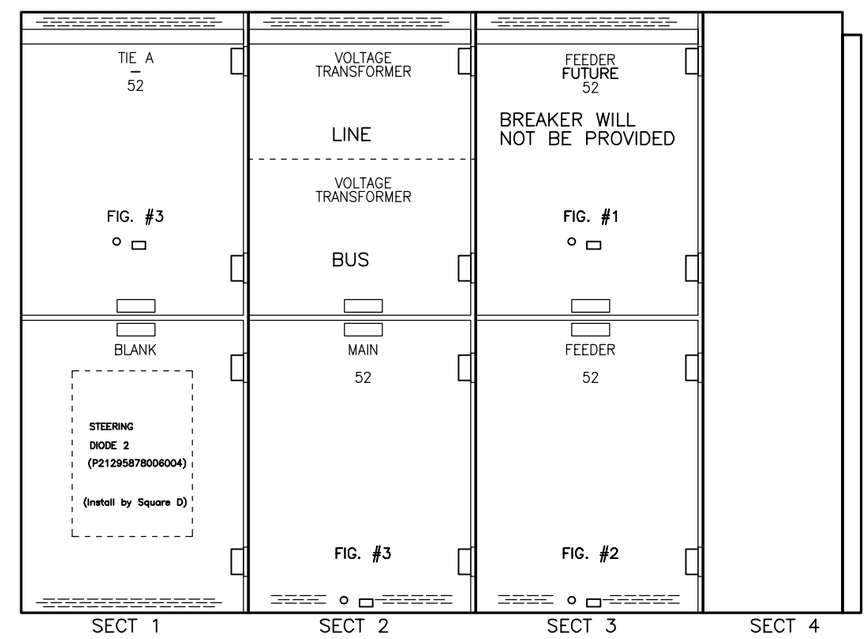

DUAL DIMENSIONS: INCHES
MILLIMETERS

JOB NAME:	BUILDING #22 RENOVATIONS	EQUIPMENT DESIGNATION:	PRIMARY SWITCH "B"
JOB LOCATION:	ALBANY NY	EQUIPMENT TYPE:	MASTERCLAD SWITCHGEAR
DRAWN BY:	CAD	DRAWING TYPE:	ELEVATION
ENGR:	VAN N. NGUYEN		SQUARE D Schneider Electric
DATE:	FEBRUARY 01, 2006		
DRAWING STATUS:	RECORD	DWG#	F21295878-002-01 — PG 1 OF 1 — REV B

REV	DESCRIPTION	BY	DATE	-	----	--	--/--/--	-	----	--	--/--/--
-	----	--	--/--/--	-	----	--	--/--/--	-	----	--	--/--/--

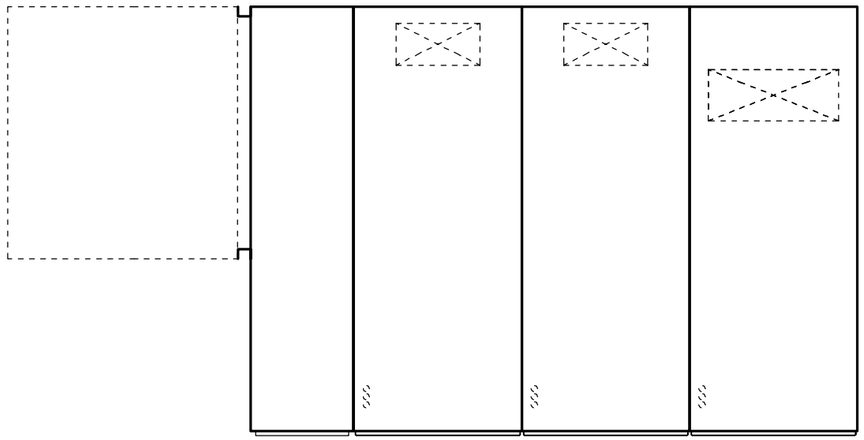

TOP VIEW

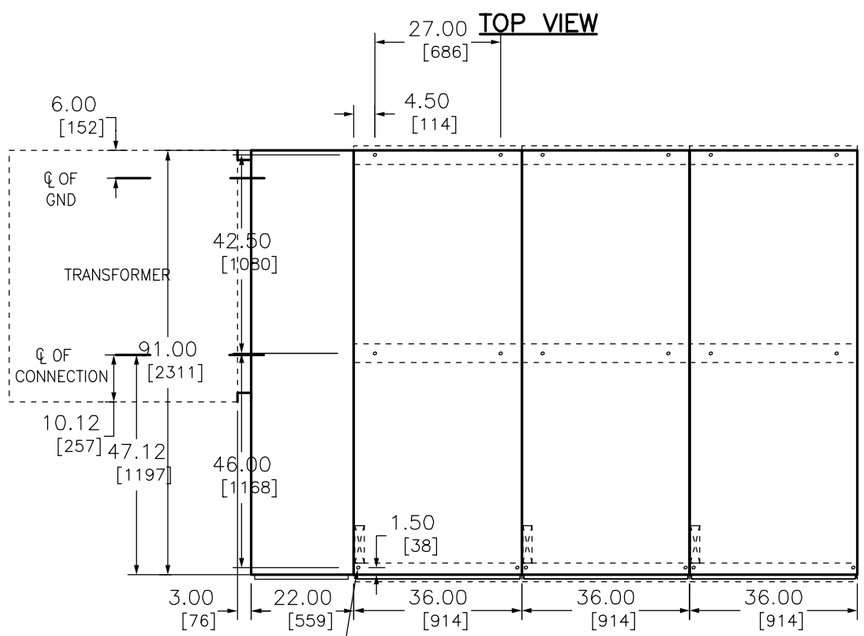

FLOOR PLAN

SEE DRAWING -51 FOR INSTALLATION-FOUNDATION REQUIREMENTS

DUAL DIMENSIONS: INCHES / MILLIMETERS

JOB NAME:	BUILDING #22 RENOVATIONS	EQUIPMENT DESIGNATION:	PRIMARY SWITCH "B"
JOB LOCATION:	ALBANY NY	EQUIPMENT TYPE:	MASTERCLAD SWITCHGEAR
DRAWN BY:	CAD	DRAWING TYPE:	TOP VIEW/FLOOR PLAN
ENGR:	VAN N. NGUYEN		SQUARE D Schneider Electric
DATE:	FEBRUARY 01, 2006		
DRAWING STATUS:	RECORD	DWG# F21295878-002-02	PG 1 OF 1 REV -

REV	DESCRIPTION	BY	DATE	-	----	--	--/--/--	-	----	--	--/--/--
-	----	--	--/--/--	-	----	--	--/--/--	-	----	--	--/--/--

GENERAL NOTES:

PRODUCT DESCRIPTION AND RATINGS:

POWER SYSTEM DATA:

13800 VOLTS, 3 PHASE, 3 WIRE WYE SOLIDLY GROUNDED
95 KV BIL, 60 HERTZ FREQUENCY

BUS SYSTEM DATA:

1200 AMPERES, SILVER PLATED COPPER, EPOXY INSULATED
36 KA RMS SYMMETRICAL BUS BRACING
EPOXY STAND-OFF INSULATORS
GLASS POLYESTER BETWEEN SECTION BUS BARRIER
BREAKER BUSHINGS IN CELL ARE POLYESTER
SILVER PLATED COPPER GROUND BUS

ENCLOSURE DATA:

NEMA 1 INDOOR CONSTRUCTION
ANSI #49 FINISH, PROCEDURES: ZINC PHOSPHATE WITH NON-CHROMIC SEAL, RUST INHIBITED TREATMENT WITH BAKED POLYESTER COATING.
REAR ACCESS BY BOLTED PANELS
WHITE INTERIOR LOW VOLTAGE PANELS

HANDLING:

SWITCHGEAR SECTIONS ARE FURNISHED WITH FOUR LIFTING LUGS AND ARE SHIPPED ON SKIDS. ROLLERS SHALL ONLY BE USED WITH SKID IN PLACE.

SWITCHGEAR SHIPPING WEIGHT WITH BREAKERS INSTALLED:

SHIPPING SPLIT 1 WEIGHT: 4395 LBS 1998 KG
SHIPPING SPLIT 2 WEIGHT: 5730 LBS 2605 KG

BREAKER WEIGHT:

1200A, 380 LBS 173KG
2000A, 430 LBS 196KG
3000A, 700 LBS 318KG

CODE STANDARDS:

ANSI, NEMA, UL

PRODUCT INFORMATION:

WIRING:

CONTROL WIRING IS # 12 AWG, TYPE SIS. MOC'S, TOC'S AND SECONDARY DISCONNECTS WILL REMAIN #14 AWG.
CURRENT CIRCUIT WIRING IS # 10 AWG, TYPE SIS

WIRE LABELING:

WIRES SHALL BE LABELED WITH DESTINATION MARKING. (POINT TO POINT)

TERMINATIONS:

UNINSULATED RING TYPE LUGS SHALL BE USED (WHERE APPLICABLE) ON ALL LOW VOLTAGE SCREW/STUD TERMINALS.
TERMINAL BLOCKS ARE SCREW TYPE LUGS (TYPE OTTA-6).
SQUARE D COMPRESSION BOX LUGS (TYPE 9080GR6) TERMINAL BLOCKS FOR ALL COMMUNICATIONS TERMINATIONS WHEN REQUIRED.

BREAKER SPECIFICATION:

BREAKER TYPE IS SERIES 5 - VACUUM
BREAKER KV/KA/(MVA): 15.0/23/(500)
CLOSE CONTROL POWER IS 125VDC
TRIP CONTROL POWER IS 125VDC
MOC PROVISIONS

RELAY REQUIREMENTS:

RELAYS REQUIREMENTS PER QUOTE
RELAYS FURNISHED WITH RS-485 AND MODBUS PROTOCOL

OPTIONS/ACCESSORIES:

GENERAL OPTIONS:

AUXILIARY CONTROL POWER 120VAC BY SQUARE D

LIST OF MISC. ACCESSORIES:

SHORTING TERMINAL BLOCKS FOR ALL CT CIRCUITS
LIFT TRUCK NEEDED FOR REMOVAL OF BREAKER FROM THE CELL.

LIST OF MISC. STRUCTURE OPTIONS:

CABLE SUPPORTS

SPECIAL FEATURES-(OVERAL DIMENSIONS ARE SUBJECT TO CHANGE.)

IF SPECIAL FEATURES ARE INCLUDED IN THIS BILL OF MATERIAL, THEY WILL NOT APPEAR ON THE FRONT- ELEV OR ONE- LINE DRAWING AND MAY ALTER THE FINAL LAYOUT AND DIMENSIONS.

GENERAL RECORD

2 - SPARE PRIMARY FUSES SET
4 - SPARE SECONDARY FUSES SET OF 10
SPARE LED LIGHTS
2 - NORMAL PWR A-B, B-C AVAILABLE LED LIGHTS
1 - CONTROL PWR FAILURE ALARM RELAY

CUSTOMER GROUND BUS CONNECTION 1/4" X 4" MINIMUM

JOB NAME:	BUILDING #22 RENOVATIONS	EQUIPMENT DESIGNATION:	**PRIMARY SWITCH "B"**
JOB LOCATION:	ALBANY NY	EQUIPMENT TYPE:	MASTERCLAD SWITCHGEAR
DRAWN BY:	CAD	DRAWING TYPE:	GENERAL NOTES
ENGR:	VAN N. NGUYEN		SQUARE D Schneider Electric
DATE:	FEBRUARY 01, 2006		
DRAWING STATUS:	RECORD	DWG#	**F21295878-002-03** PG 1 OF 1 REV -

REV	DESCRIPTION	BY	DATE								
–	----	--	--/--/--	–	----	--	--/--/--	–	----	--	--/--/--
				–	----	--	--/--/--	–	----	--	--/--/--

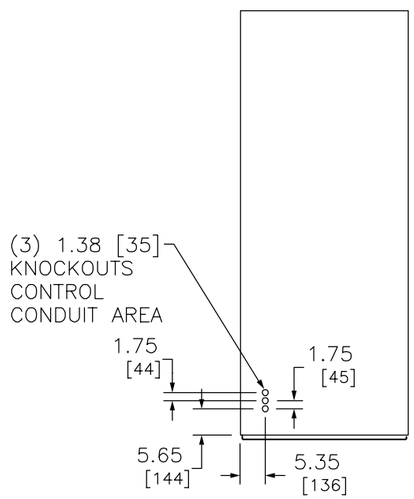

TOP VIEW

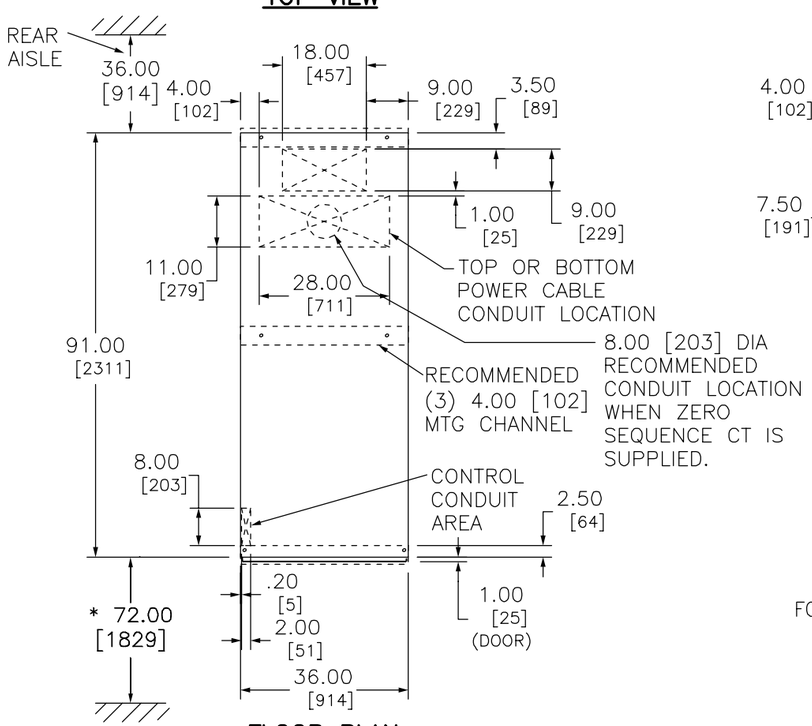

FLOOR PLAN

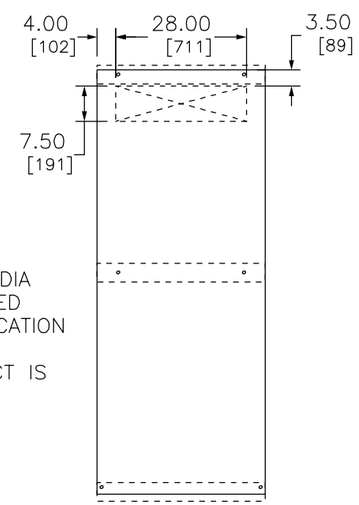

FOR TIE AND 36.00 [914]
METERING SECTION

INSTALLATION–FOUNDATION REQUIREMENTS

* WHEN LIFT TRUCK IS REQUIRED, RECOMMENDED 72.00 [1829] FRONT AISLE, 64.00 [1626] MINIMUM.

THE SWITCHGEAR MUST BE INSTALLED ON A FLAT, LEVEL SURFACE. SQUARE D RECOMMENDS INSTALLING THE SWITCHGEAR ON A CONCRETE PAD LEVELED TO .0625 IN ANY SQUARE YARD, WITH STEEL CHANNELS INSTALLED IN THE PAD FOR ANCHORING THE SWITCHGEAR.

POUR A 72.00 [1829] WIDE AISLE SPACE IN FRONT OF THE MOUNTING PAD, FLUSH WITH AND FINISHED WITH THE SAME TOLERANCE AS THE MOUNTING PAD. THIS LEVEL SURFACE IS NECESSARY FOR THE CIRCUIT BREAKER LIFT TRUCK AND FOR INSERTING THE CIRCUIT BREAKERS INTO THE BOTTOM COMPARTMENT.

A MINIMUM OF 36.00 [914] IS NECESSARY ON THE RIGHT END FACING THE FRONT OF THE LINE–UP. THIS SPACE IS NECESSARY FOR DOOR CLEARANCE WHEN REMOVING THE CIRCUIT BREAKERS.

RECOMMENDED BASE CHANNEL MOUNTING

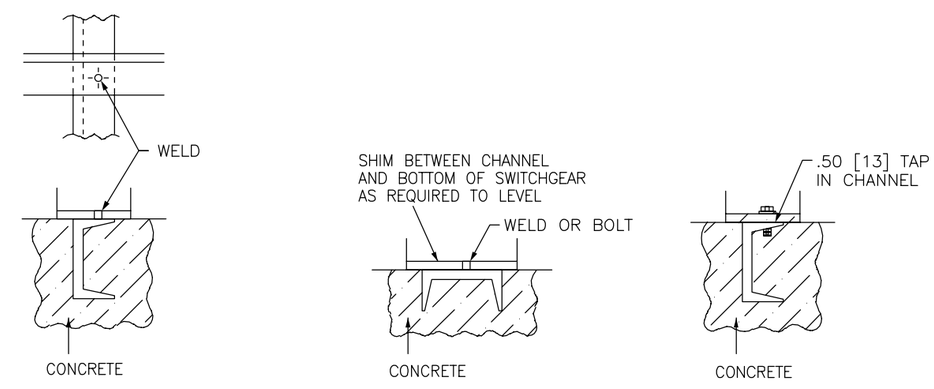

DUAL DIMENSIONS: INCHES / MILLIMETERS

JOB NAME:	BUILDING #22 RENOVATIONS	EQUIPMENT DESIGNATION:	PRIMARY SWITCH "B"
JOB LOCATION:	ALBANY NY	EQUIPMENT TYPE:	MASTERCLAD SWITCHGEAR
DRAWN BY:	CAD	DRAWING TYPE:	DETAIL VIEW
ENGR:	VAN N. NGUYEN		SQUARE D Schneider Electric
DATE:	FEBRUARY 01, 2006		
DRAWING STATUS:	RECORD	DWG# F21295878–002–51	PG 1 OF 1 REV –

REV	DESCRIPTION	BY	DATE	–	----	--	--/--/--
–	----	--	--/--/--	–	----	--	--/--/--

METALCLAD SWITCHGEAR
SERIES 5

FACTORY ORDER NO.		F0
RATED MAXIMUM VOLTAGE	kV	15.0
IMPULSE WITHSTAND (BIL)	kV	95
FREQUENCY	HZ	60
CONTINUOUS CURRENT	A	1200
MAX SHORT CIRCUIT CUR.	kA SYM	23

SQUARE D COMPANY
SMYRNA, TN USA
46006-801-01

JOB NAME:	BUILDING #22 RENOVATIONS	EQUIPMENT DESIGNATION:	PRIMARY SWITCH "B"
JOB LOCATION:	ALBANY NY	EQUIPMENT TYPE:	MASTERCLAD SWITCHGEAR
DRAWN BY:	CAD	DRAWING TYPE:	RATING NAMEPLATE
ENGR:	VAN N. NGUYEN		SQUARE D Schneider Electric
DATE:	FEBRUARY 01, 2006		
DRAWING STATUS:	RECORD	DWG# N21295878-002-01	PG 1 OF 1 REV –

REV	DESCRIPTION	BY	DATE								
A	ADD CM4000	VN	05/17/06	B	REVISED CT RATIO, ADD LUGS, ADD 86	VN	06/05/06	–	----	--	--/--/--
				C	ADD GND LUGS	VN	06/14/06	–	----	--	--/--/--

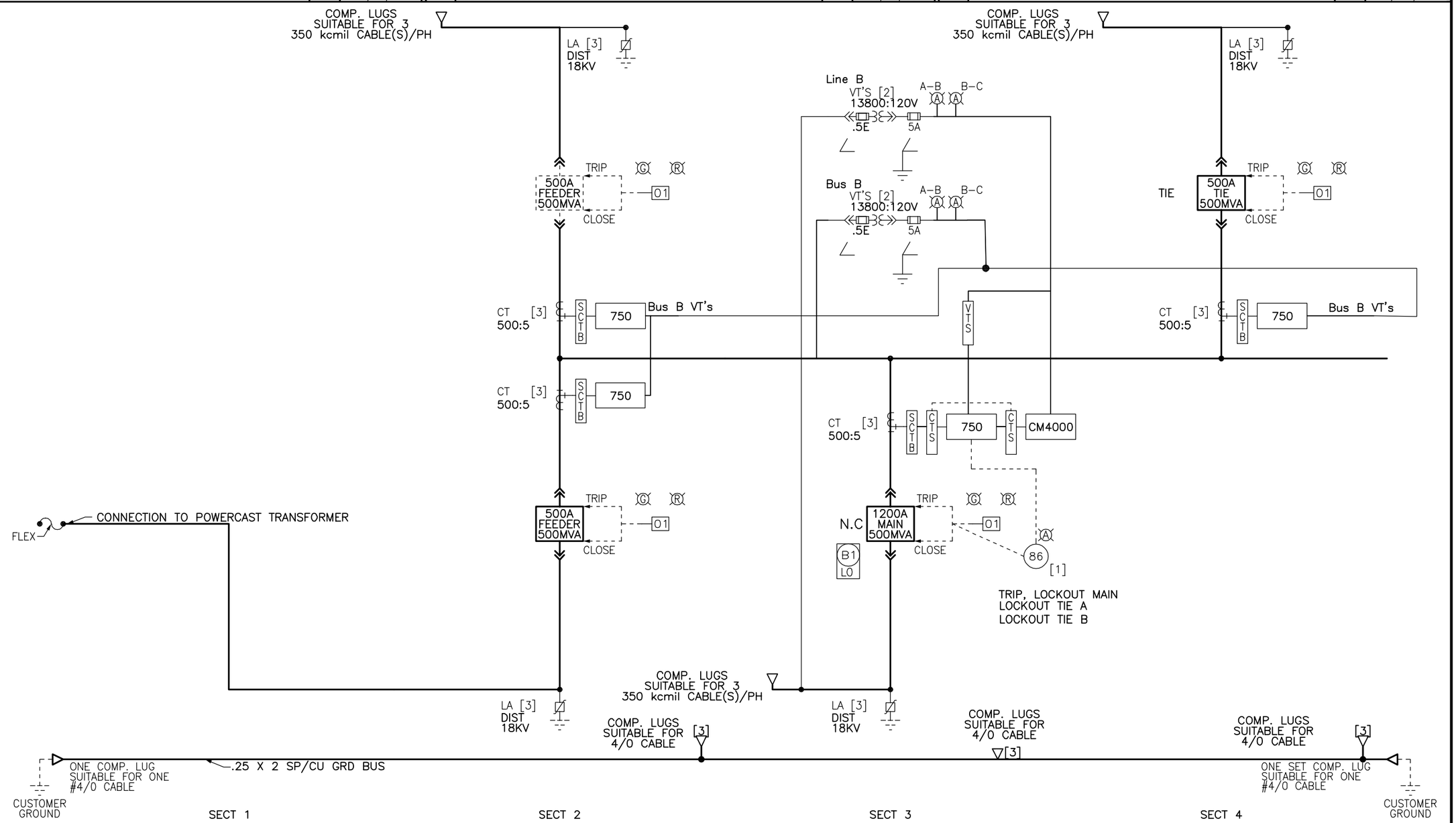

JOB NAME:	BUILDING #22 RENOVATIONS	EQUIPMENT DESIGNATION:	PRIMARY SWITCH "B"
JOB LOCATION:	ALBANY NY	EQUIPMENT TYPE:	MASTERCLAD SWITCHGEAR
DRAWN BY:	CAD	DRAWING TYPE:	ONE LINE DIAGRAM
ENGR:	VAN N. NGUYEN		SQUARE D Schneider Electric
DATE:	FEBRUARY 01, 2006		
DRAWING STATUS:	RECORD	DWG# 021295878-002-01	PG 1 OF 1 REV C

REV	DESCRIPTION	BY	DATE								
–	----	--	--/--/--	–	----	--	--/--/--	–	----	--	--/--/--
				–	----	--	--/--/--	–	----	--	--/--/--

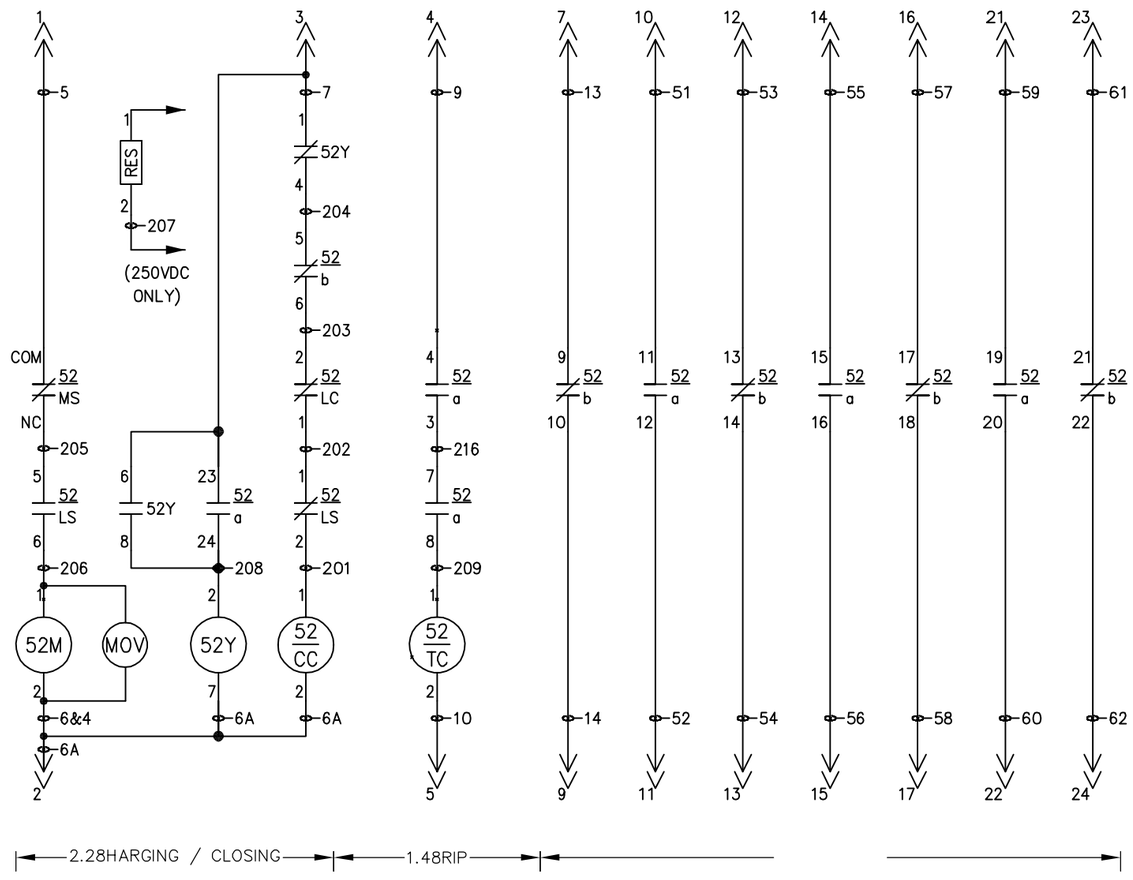

REF: 46040-651-00

OPERATION OF BREAKER

1. THE BREAKER WILL CLOSE IF THE CLOSING SPRINGS HAVE BEEN CHARGED ELECTRICALLY OR MANUALLY. 52/MS ENSURES THAT THE CLOSING SPRINGS CAN ONLY BE CHARGED ELECTRICALLY WITH THE BREAKER IN THE CONNECTED AND TEST POSITIONS.

2. THE CLOSING CIRCUIT HAS CONTINUITY WHEN THE CLOSING SPRINGS ARE CHARGED AND THE BREAKER IS OPEN. APPLYING A CLOSE SIGNAL ENERGIZES THE CLOSE COIL, 52/CC. IT DISCHARGES THE CLOSING SPRINGS, CLOSING THE BREAKER AND CHARGING THE OPENING SPRINGS. WHEN THE BREAKER CLOSES, 52/a, 52/b AND 52/LS CHANGE STATE.

3. 52/a CLOSING ALLOWS CONTINUITY IN THE TRIP CIRCUIT AND PICKS UP THE ANTI-PUMP RELAY, 52Y. 52Y SEALS ITSELF IN, ENSURING THAT THE CLOSE SIGNAL MUST BE REMOVED AND REAPPLIED BEFORE THE BREAKER CAN BE CLOSED AGAIN. 52/b, 52/LS AND 52Y OPEN THE CLOSING CIRCUIT. 52/LS CHANGING STATE ALLOWS THE CLOSING SPRINGS TO BE CHARGED.

4. APPLYING A TRIP SIGNAL ENERGIZES THE TRIP COIL, 52/TC. IT DISCHARGES THE OPENING SPRINGS, OPENING THE BREAKER. WHEN THE BREAKER OPENS, 52/a AND 52/b CHANGE STATE.

5. SPARE 52/a AND 52/b CONTACTS INDICATE THE BREAKER STATE. 52/a CLOSES WHEN THE BREAKER CLOSES. 52/b CLOSES WHEN THE BREAKER OPENS.

LEGEND

52	CIRCUIT BREAKER
52M	SPRING CHARGING MOTOR
52Y	ANTI-PUMP RELAY
52/a	AUX. SWITCH CONTACTS, OPEN WHEN BREAKER IS OPEN
52/b	AUX. SWITCH CONTACTS, CLOSED WHEN BREAKER IS OPEN
52/CC	CLOSE COIL
52/LC	LATCH CHECK SWITCH
52/LS	SPRING CHARGING MOTOR LIMIT SWITCH
52/MS	MOTOR CUTOFF SWITCH
52/TC	TRIP COIL
RES	RESISTOR (250VDC CLOSING ONLY)

NOTES:

1. BREAKER SHOWN IN THE OPEN STATE WITH CLOSING SPRINGS CHARGED.
2. WHERE WIRE NUMBERS CHANGE ON A WIRE, THERE ARE INTERVENING TERMINAL BLOCKS NOT SHOWN.
3. BREAKER WIRING DIAGRAM IS 46040-652.

JOB NAME:	BUILDING #22 RENOVATIONS	EQUIPMENT DESIGNATION:	PRIMARY SWITCH "B"
JOB LOCATION:	ALBANY NY	EQUIPMENT TYPE:	MASTERCLAD SWITCHGEAR
DRAWN BY:	CAD	DRAWING TYPE:	BREAKER
ENGR:	VAN N. NGUYEN		SQUARE D Schneider Electric
DATE:	FEBRUARY 01, 2006		
DRAWING STATUS:	RECORD	DWG# R21295878-002-01	PG 1 OF 1 REV –

REV	DESCRIPTION	BY	DATE	–	----	--	--/--/--	–	----	--	--/--/--
–	----	--	--/--/--	–	----	--	--/--/--	–	----	--	--/--/--

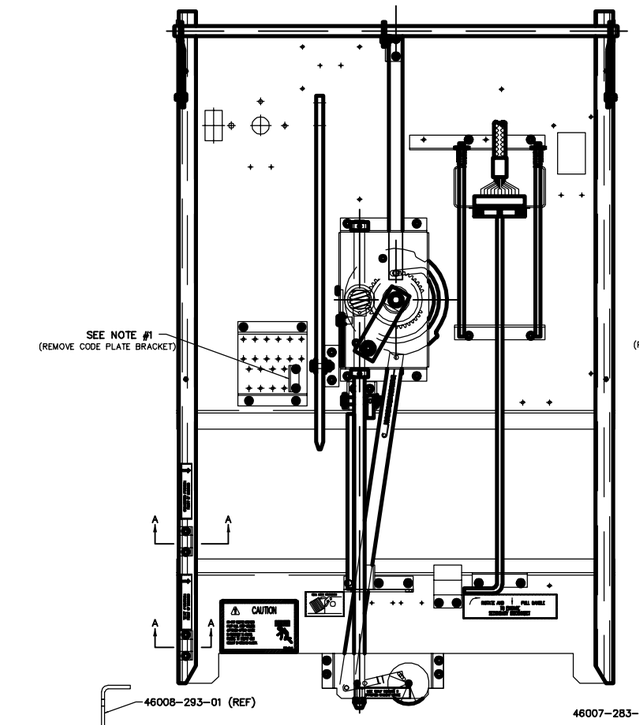

FIGURE 1
–EG&TD WITH CONTACT IN UPPER POSITION
CAN BE INSERTED INTO THIS BREAKER CELL.
–NORMALLY THE UPPER CELL

SECTION "A–A"

SCALE = 1 : 1.333

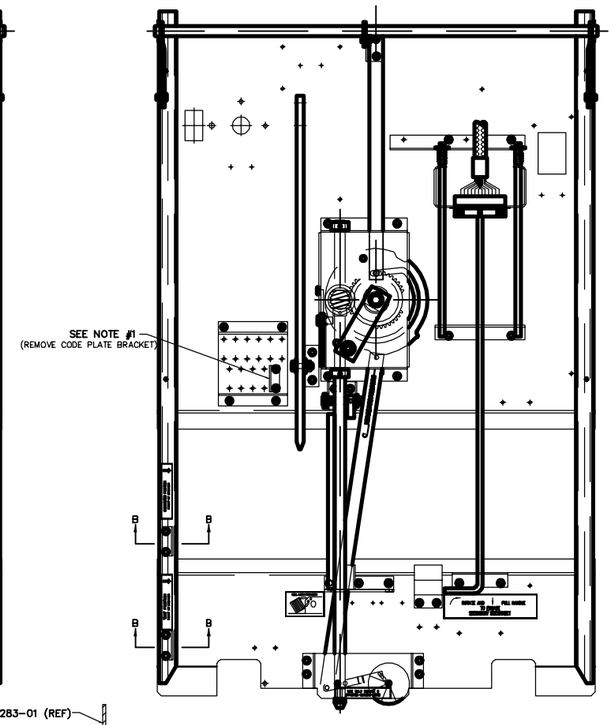

FIGURE 2
–EG&TD WITH CONTACT IN LOWER POSITION
CAN BE INSERTED INTO THIS BREAKER CELL.
–NORMALLY THE LOWER CELL

SECTION "B–B"

SCALE = 1 : 2

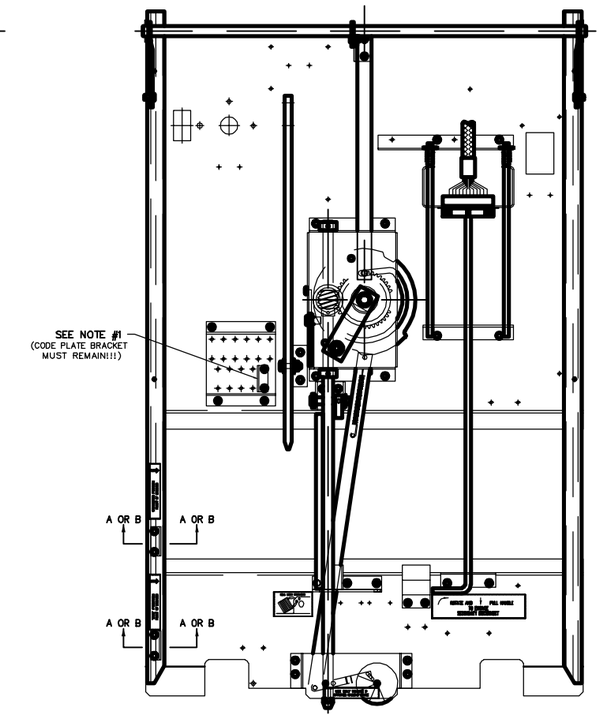

FIGURE 3 (LOWER CELL SHOWN)
–EG&TD WITH CONTACTS IN ANY POSITION
CAN NOT BE INSERTED INTO THIS BREAKER CELL.
–NORMALLY TIE AND/OR MAIN BREAKER CELLS.

NOTES: (FOR FACTORY USE ONLY)

1) ALL BREAKER CELLS ARE EQUIPPED WITH CODE PLATE BRACKET (P/N 46007–642–01) TO BLOCK OUT ALL GROUND & TEST DEVICES. THIS INTERLOCK HAS TO BE REMOVED FROM ALL BREAKER CELLS OF A FACTORY ORDER WHERE AN EG&TD IS TO BE USED. (MUST BE LEFT IN AT CELLS USING FIGURE 3)
2) 3000A EG&TD CAN ONLY BE INSERTED INTO LOWER BREAKER CELLS.

JOB NAME:	BUILDING #22 RENOVATIONS	EQUIPMENT DESIGNATION:	PRIMARY SWITCH "B"
JOB LOCATION:	ALBANY NY	EQUIPMENT TYPE:	MASTERCLAD SWITCHGEAR
DRAWN BY:	CAD	DRAWING TYPE:	ELECTRIC GROUND TEST DEVICE
ENGR:	VAN N. NGUYEN		SQUARE D Schneider Electric
DATE:	FEBRUARY 01, 2006		
DRAWING STATUS:	RECORD	DWG# R21295878–002–02	PG 1 OF 1 REV –

REV	DESCRIPTION	BY	DATE								
A	REMOVE CPT, ADD LA'S	VN	05/17/06	B	ADD BUS VT'S	VN	06/05/06	-	----	--	--/--/--
				-	----	--	--/--/--	-	----	--	--/--/--

RIGHT SIDE SECTION VIEWS

SECTION 2

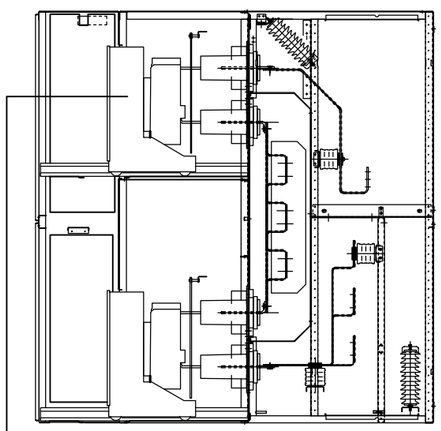

SECTION 3

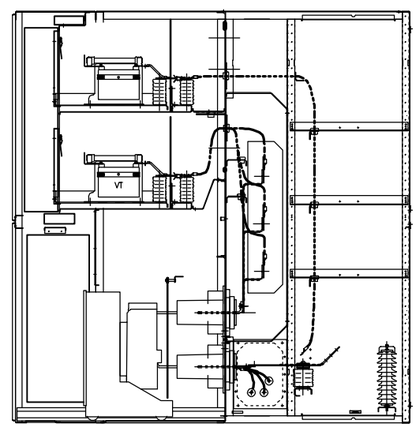

SECTION 4

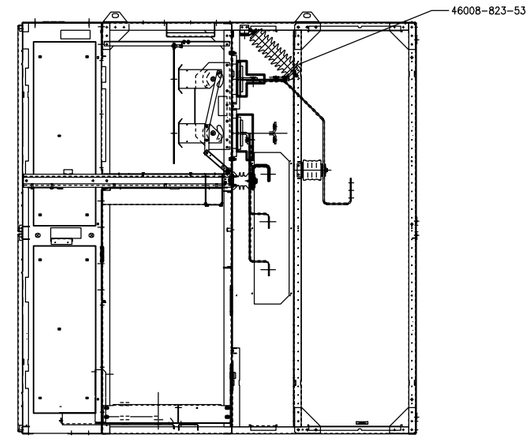

BREAKER WILL NOT BE PROVIDED

JOB NAME:	BUILDING #22 RENOVATIONS	EQUIPMENT DESIGNATION:	PRIMARY SWITCH "B"
JOB LOCATION:	ALBANY NY	EQUIPMENT TYPE:	MASTERCLAD SWITCHGEAR
DRAWN BY:	CAD	DRAWING TYPE:	SECTION VIEW
ENGR:	VAN N. NGUYEN		SQUARE D Schneider Electric
DATE:	FEBRUARY 01, 2006		
DRAWING STATUS:	RECORD	DWG# S21295878-002-01	PG 1 OF 1 REV B

SQUARE D COMPANY
Schneider Electric

Job Name:	BUILDING #22 RENOVATIONS	Square D Quotation #:	21295878
Job Location:	ALBANY, NY	Quotation Revision #:	
		Sales Contact:	Ron Murray
		Sales Contact Location:	124
Purchaser:	WARREN ELECTRIC SUPPLY INC	Customer:	HUEN ELECTRIC
Purchaser PO #:	535087-DIR-0277968	Customer PO #:	
User:	NYS OGS	Architect:	URS CORPORATOIN
User Location:		Cons. Engineer:	
Drawing Status:	RECORD		

TABLE OF CONTENTS

SQUARE D FACTORY ORDER NUMBER: 21295878-002

Equipment Designation	Equipment Type	Drawing Type	Drawing Number	Page	Revision Level
		ELECTRICAL BILL OF MATERIAL	T21295878-002-BM	4	1
		ENGRAVED NAMEPLATES	T21295878-002-EP	2	B
		EXCEPTIONS & CLARIFICATIONS	T21295878-002-EX	1	B
PRIMARY SWITCH "B"	MASTERCLAD SWITCHGEAR	ELEVATION	F21295878-002-01	1	B
		TOP VIEW/FLOOR PLAN	F21295878-002-02	1	-
		GENERAL NOTES	F21295878-002-03	1	-
		DETAIL VIEW	F21295878-002-51	1	-
		SECTION VIEW	S21295878-002-01	1	B
		DOOR DETAIL VIEWS	D21295878-002-51	1	B
		MIMIC BUS	D21295878-002-51	2	B
		ONE LINE DIAGRAM	O21295878-002-01	1	C
		CONTROL SCHEMATIC	C21295878-002-02	1	A
			C21295878-002-02	2	A
			C21295878-002-03	1	C
			C21295878-002-03	2	A
			C21295878-002-04	1	C
			C21295878-002-AL	1	A
		COMMUNICATION SCHEMATIC	C21295878-002-CM	1	B
		INFORMATION	C21295878-003-IF	1	A
		ELEMENTARY DIAGRAMS	E21295878-002-02	1	-
		THREE LINE DIAGRAM	E21295878-002-03	1	-
			E21295878-002-03	2	-
		ELEMENTARY DIAGRAMS	E21295878-002-04	1	-
		WIRING DIAGRAM	W21295878-002-02	1	-
PRIMARY SWITCH "B'			W21295878-002-02	2	-
			W21295878-002-03	1	-
PRIMARY SWITCH "B'			W21295878-002-03	2	-
PRIMARY SWITCH "B"			W21295878-002-04	1	-
PRIMARY SWITCH "B'			W21295878-002-04	2	-
PRIMARY SWITCH "B"			W21295878-002-IC	1	-
		BREAKER	R21295878-002-01	1	-
		ELECTRIC GROUND TEST DEVICE	R21295878-002-02	1	-

These products are manufactured in a facility which is quality systems registered by Underwriters Laboratories to ISO 9000

TABLE OF CONTENTS

SQUARE D FACTORY ORDER NUMBER: 21295878-002

Equipment Designation	Equipment Type	Drawing Type	Drawing Number	Page	Revision Level
		RATING NAMEPLATE	N21295878-002-01	1	-

Summary Bill of Material

Printed 06/30/06 13:48:19 by MSM020

Find #	Part Number	Qty Per	Total Qty	Function	Supplier	Description	Rev
001	9001KP38DGS6G31	4.00	4.00	G	SQUARE D COMPANY	PILOT LIGHT, 135VDC, GREEN LED TYPE WITH GREEN COLOR CAP, FOR 125VDC BATTERY SYSTEM.	
002	9001KP38DRS6R31	4.00	4.00	R	SQUARE D COMPANY	PILOT LIGHT, 135VDC, RED LED TYPE WITH RED COLOR CAP, FOR 125VDC BATTERY SYSTEM.	
003	2438D	4.00	4.00	01	ELECTROSWITCH	SWITCH, CONTROL, SERIES 24, 1 TRIP, 1 CLOSE, SPRING RETURN, PISTOL GRIP HANDLE.	
004	750P5G5S5HIA20R	4.00	4.00	11	GE/MULTILIN	RELAY, FEEDER MANAGEMENT, 50/51, 50G, 51G, 67, 27, 59, 47 , 25, 81 & METERING. PH & GRD CT RATING 5A,SENSITIVE GROUND INPUT 5A CONTROL VOLTS 90-300VDC / 70-265VAC, (8) 20ma ANALOG OUTPUTS, RED BKR CLOSED LED .RS232/RS485 COMM. PART NUM 750P5G5S5HIA20RE	
005	FT78	1.00	1.00	TS	INSTRUMENT TRANSFORMERS	SWITCH, TEST, TYPE FT, 10 POLE, 8 CURRENT (B-I) AND 2 POTENTIAL (A&J).	
006	18100106	1.00	1.00	TERMINATOR	GE/MUTILIN	TERMINATING ASSEMBLY, CONSISTS OF 120 OHM RESISTOR AND 1nF CAPACITOR.	
007	9001KP38LYA31	4.00	4.00	A	SQUARE D COMPANY	PILOT LIGHT, 120VAC, YELLOW LED TYPE WITH AMBER COLOR CAP.	
008	13F155B12J7K0	4.00	4.00	RES	NEWARK	RESISTOR, 7K OHM, 12 WATT. B12J7K0	
009	CM4250	1.00	1.00	CM	SQUARE D COMPANY	CM4250, CIRCUIT MONITOR.	
010	CMDLC	1.00	1.00	CM DISPLAY	SQUARE D COMPANY	POWERLOGIC CIRCUIT MONITOR LCD DISPLAY.	
011	IOC44	2.00	2.00	I/O	SQUARE D COMPANY	CIRCUIT MONITOR DIGITAL I/O CARD.	
012	63230-300-64	1.00	1.00	ADAPTER ASSY	SQUARE D COMPANY	CM4000 FILLER/ADAPTER PLATE ASSEMBLY: INCLUDES ADAPTER PLATE, HARDWARE KIT, AND CABLE FOR CONNECTING CM4000 MODULE TO THE DISPLAY.	
013	7805D	1.00	1.00	86	ELECTROSWITCH	RELAY, LOCKOUT, 125VDC, TYPE LOR, 5 DECK,10 TRIP, 10 RESET, HAND RESET, WITH OVAL HANDLE.	

Summary Bill of Material

Printed 06/30/06 13:48:19 by MSM020

Find #	Part Number	Qty Per	Total Qty	Function	Supplier	Description	Rev
014	9001KP38DYS6A31	1.00	1.00	A	SQUARE D COMPANY	PILOT LIGHT, 135VDC, YELLOW LED TYPE WITH AMBER COLOR CAP, FOR 125VDC BATTERY SYSTEM.	
020	25499-12961	9.00	9.00	8	SQUARE D COMPANY	FUSIBLE DISCONNECT, 30AMP, 2 POLE, 600VAC/DC, FOR USE WITH 1.5" FUSES.	
021	25419-51500	36.00	36.00	FU	SQUARE D COMPANY	FUSE, ONE TIME, 15 AMPERE, 1.5", 500VAC/500VDC.	
022	25419-50500	22.00	22.00	FU	SQUARE D COMPANY	FUSE, ONE TIME, 5 AMPERE, 1.5", 500VAC/500VDC.	
023	BAF5	4.00	4.00	FU	BUSSMANN	FUSE, ONE TIME, 5 AMPERES, 1.5", 250VAC.	
024	CSL3860010	1.00	1.00	27DC	POTTER & BRUMFIELD	RELAY, DC VOLTAGE, TYPE CSL, ADJUSTABLE PICKUP 92-140, AND DROPOUT 90-138, DPDT, 150VDC MAXIMUM.	
025	94B1201	1.00	1.00	CLIP	NEWARK	RELAY SPRING CLIP, MAGNECRAFT/STRUTHERS-DUNN 16-1278.	
026	20C318	1.00	1.00	CLIP	POTTER & BRUMFIELD	PB RELAY SPRING CLIP	
027	SR2P-06	1.00	1.00	SKT	IDEC	RELAY SOCKET, 8 PIN, TUBULAR, 1 TIER, SCREW TERMINAL, 300V.	
028	7014PD	1.00	1.00	62	AGASTAT	RELAY, TIME DELAY, MODEL 7014, ON DELAY, 4 POLE DOUBLE THROW, 125VDC, 10-100 SECONDS.	
030	780R501	12.00	12.00	CT	SQUARE D COMPANY	CURRENT TRANSFORMER, SINGLE RATIO, MODEL 780R, 500:5, C50.	
031	KUXSC4S2093	4.00	4.00	SCTB	BUSSMANN	TERMINAL BLOCK, SHORTING TYPE, BINDER HEAD SCREW LUG (#10-32), 4 POINT, #18-#10 WIRE, 30A, 600V.	
032	PTG521101382FFG	4.00	4.00	VT	INSTRUMENT TRANSFORMERS	VOLTAGE TRANSFORMER, 2 FUSE, 115:1 (13,800:120V), 110kV BIL, 1500VA, TYPE PTG-5, #PTG521101382FFGC2, WITH 0.5E FUSES (BUSSMANN #15.5CAVH0.5E).	
040	V5D6133Y000	3.00	3.00	52	SQUARE D COMPANY	CIRCUIT BREAKER, VR, VACUUM, 15.0KV, 25KA, 1200A, 125VDC CLOSE, 125VDC TRIP, MOC (VR-15050-12).	

Summary Bill of Material

Printed 06/30/06 13:48:19 by MSM020

Find #	Part Number	Qty Per	Total Qty	Function	Supplier	Description	Rev
041	46007-380-51	4.00	4.00	52S	SQUARE D COMPANY	MOC (MECH. OPER. CONTACT) SW., 5a, 5b, MASTERCLAD SWGR., STATIONARY MTD., OPERATES IN TEST AND CONN.	
042	46007-381-51	4.00	4.00	52H	SQUARE D COMPANY	TOC (TRUCK OPER. CONTACT) SWITCH, 5a, 5b, MASTERCLAD SWITCHGEAR, CELL MOUNTED.	
044	9L23FXX018XHS1	12.00	12.00	LA	GENERAL ELECTRIC	SURGE ARRESTER, DISTRIBUTION CLASS, HEAVY DUTY, TYPE XEP, 18KV, 15.3KV MCOV.	
045	P21295878002001	1.00	1.00	KEYLOCK	FEDERAL PIONEER	P7997 = SMYRNA PO#, KEY INTERLOCK VFL000010SH-----, KEY REMOVABLE EXTENDED, KEY INTERCHANGE B1, USER - SOB CAMPUS , USER LOCATION - ALBANY, NEW YORK	
046	YA312N	27.00	27.00	LUG	BURNDY	LUG, CRIMP, LONG BARREL, TIN PLATED, #3/0-350MCM CU, (2) 1/2" HOLES, RED.	
047	YA282LN	11.00	11.00	LUG	BURNDY	LUG, COMPRESSION, COPPER, STD BARREL, TIN PLATED, #4/0, 2 HOLE PAD, 1/2" BOLT, PURPLE COLOR CODE.	
050	46008-880-50	1.00	1.00	CRTN PACK	SQUARE D COMPANY	CARTON PACKING, SER 5 INDOOR, CONSISTING OF: 6055-31 & 6055-30 MANUALS AND LOOSE PARTS TAG.	
051	46007-382-50	1.00	1.00	RACK HNDL	SQUARE D COMPANY	CIRCUIT BREAKER RACKING HANDLE, MASTER CLAD SWITCHGEAR.	
052	6508805210	12.00	12.00	BULB	SQUARE D COMPANY	RED LED LIGHT BULB FOR 24-28VDC OR 120VAC/DC PILOT LIGHT.	
053	6508805212	12.00	12.00	BULB	SQUARE D COMPANY	GREEN LED LIGHT BULB FOR 24-28VDC OR 120VAC/DC PILOT LIGHT.	
054	TP111	1.00	1.00	TEST PLUG	INSTRUMENT TRANSFORMERS	TEST PLUG, SERIES, 10 POLE FOR FT TEST SWITCHES FT55, 58, 76, 78.	
055	6508805202	12.00	12.00	BULB	SQUARE D COMPANY	YELLOW LED LIGHT BULB FOR 6V OR 9001K TRANSFORMER PILOT LIGHT	
056	15.5CAVH0.5E	4.00	4.00	FU	BUSSMANN	FUSE, VOLTAGE TRANSFORMER, .5E, 15.5KV, TYPE CAVH.	

Summary Bill of Material

Printed 06/30/06 13:48:19 by MSM020

Find #	Part Number	Qty Per	Total Qty	Function	Supplier	Description	Rev
057	1422123	4.00	4.00	TB	MARATHON	TERMINAL BLOCK, POWER BLOCK, 200A, 600V, 1/4-20 SCREW, 2 POLE, CU.	
058	9365	20.00	20.00	CABLE	BELDEN	CABLE, 300V SHIELDED CONTROL TYPE, THREE CONDUCTORS UNDER OVERALL BELDFOIL SHIELD, #18 GAUGE, PVC JACKET.	

WIRE ROUTING EXAMPLE

1=BA-1,BD-2#SIZE

- NON-STANDARD WIRE SIZE
- DESTINATION PIN NUMBER
- SECOND DESTINATION
- DESTINATION PIN NUMBER
- FIRST DESTINATION
- DEVICE TERMINAL NUMBER

(--) ITEM NUMBER-SEE ELECTRICAL BILL OF MATERIAL

LTA

BA-1	1	63	RTB-4
BA-2	2	64	RTB-5
BA-3	3	65	
BA-4	4	66	
BA-5	5	67	
BA-6	6	68	
BA-7	7	69	
BA-8	8	70	
BA-9	9	71	
BA-10	10	72	
BA-11	11	73	
BA-12	12	74	
BA-13	13	75	
BA-14	14	76	
BA-15	15	77	
BA-16	16	78	
BA-17	17	79	
BA-19	18	80	
BA-18	19	81	
BA-20	20	82	
BD-1	21	83	
BD-2	22	84	
BD-3	23	85	
BD-4	24	86	
BD-5	25	87	
BD-8	26	88	
BD-7	27	89	
BD-8	28	90	
BD-9	29	91	
BD-10	30	92	
BD-11	31	93	
BD-12	32	94	
BD-13	33	95	
BD-14	34	96	
BD-15	35	97	
BD-16	36	98	
BD-17	37	99	LTB-3
BD-19	38	100	RTB-6
BD-18	39	101	
BD-20	40	102	

JUMP 1 & 37 [R]

LTI

1	.
2	.
3	.
4	.
5	.
6	. RTB-1,RTO-1
7	. RTB-2,RTO-2
8	. RTB-3,RTO-3
9	.
10	.
11	.
12	.

LTB

1	. BE-2
2	. RTA-4
3	. LTA-37
4	. RTA-6
5	. RTB-7
6	. RTB-8
7	. RTB-9
8	. RTB-10
9	. RTB-11
10	. RTB-12
11	. RTB-13
12	. RTB-14
13	. RTB-15
14	. RTB-16
15	.
16	.
17	.
18	.
19	.
20	.
21	.
22	.
23	.
24	.

BA

1=LTA-1	11=LTA-11
2=LTA-2	12=LTA-12
3=LTA-3	13=LTA-13
4=LTA-4	14=LTA-14
5=LTA-5	15=LTA-15
6=LTA-6	16=LTA-16
7=LTA-7	17=LTA-17
8=LTA-8	18=LTA-19
9=LTA-9	19=LTA-18
10=LTA-10	20=LTA-20

(41) 1 3 5 7 9 11 13 15 17 18 / 2 4 6 8 10 12 14 16 19 20 — 52S

BD

1=LTA-21	11=LTA-31
2=LTA-22	12=LTA-32
3=LTA-23	13=LTA-33
4=LTA-24	14=LTA-34
5=LTA-25	15=LTA-35
6=LTA-26	16=LTA-36
7=LTA-27	17=LTA-37
8=LTA-28	18=LTA-39
9=LTA-29	19=LTA-38
10=LTA-30	20=LTA-40

(42) 18 17 15 13 11 9 7 5 3 1 / 20 19 16 14 12 10 8 6 4 2 — 52H

RTA

SDU-6	1	4	
SDU-1	2	5	DU5F-16,BE-2
SDU-2	3	6	BE-4
SDU-3	4	7	DU5F-17,LTB-2
SDU-8	5	8	
SDU-4	6	9	DU7D-F2,LTB-4
SDU-5	7	10	DU7D-D12
SDU-7	8	13	DU6E-2
SDU-9	9	14	BF-4
SDU-20	10	27	
SDU-18	11	28	
SDU-19	12	29	
SDU-10	13	51	
SDU-11	14	52	
SDU-12	15	53	
SDU-13	16	54	
SDU-14	17	55	
SDU-15	18	56	
SDU-16	19	57	
SDU-17	20	58	
SDU-21	21	59	
SDU-22	22	60	
SDU-23	23	61	
SDU-24	24	62	

JUMP 7 & 9 [R]

RTB

DU7D-G5	1	. LTI-6
DU7D-H5	2	. LTI-7
DU7D-G6	3	. LTI-8
DU7D-E2	4	. BF-2,LTA-1
DU7D-C1	5	. LTA-2
DU7D-C2	6	. LTA-38
DU7D-C3	7	. LTB-5
DU7D-C4	8	. LTB-6
DU7D-C5	9	. LTB-7
DU7D-C6	10	. LTB-8
DU7D-F11	11	. LTB-9
DU7D-F12	12	. LTB-10
DU7D-E12	13	. LTB-11
DU7D-E4	14	. LTB-12
DU7D-F4	15	. LTB-13
DU7D-E5	16	. LTB-14
	17	.
	18	.
	19	.
	20	.
	21	.
	22	.
	23	.
	24	.

(A) (B) (C)

(30) A X2 X1 — CG
X1=STG-1#10
X2=CH-X2#10

(30) B X2 X1 — CH
X1=STG-2#10
X2=CG-X2,CI-X2##10

(30) C X2 X1 — CI
X1=STG-3#10
X2=CH-X2,STG-4##10

SDU

1=RTA-2	13=RTA-16
2=RTA-3	14=RTA-17
3=RTA-4	15=RTA-18
4=RTA-6	16=RTA-19
5=RTA-7	17=RTA-20
6=RTA-1	18=RTA-11
7=RTA-8	19=RTA-12
8=RTA-5	20=RTA-10
9=RTA-9	21=RTA-21
10=RTA-13	22=RTA-22
11=RTA-14	23=RTA-23
12=RTA-15	24=RTA-24

SDU 12 11 10 9 8 7 6 5 4 3 2 1 / 24 23 22 21 20 19 18 17 16 15 14 13 — REAR VIEW OF SECONDARY DISCONNECT

(31) STG

CC-X1#10	1	1A	DU7D-G7#10
CH-X1#10	2	2A	DU7D-G8#10
CI-X1#10	3	3A	DU7D-G9#10
CI-X2,G-2##10	4	4A	DU7D-H10#10

BE

1=BF-1#10
2=LTB-1,RTA-2
3=BF-3#10
4=RTA-3

(20) (21) 1 2 / (21) 3 4 — 15A — 8C

BF

1=BE-1,PTD-1##10
2=RTB-4
3=BE-3,PTD-2##10
4=RTA-9

(20) (21) 1 2 / (21) 3 4 — 15A — 8T

G

2=STG-4#10
3=STN-4#10
4=DU7D-G11#12
5=DU7D-G12#12
6=DU7D-G#12
7=DL7D-G11#12
9=DL7D-G12#12
10=DL7D-G#12

1 2 4 5 6 7 8 9 11 12 13 14 15 16 17 18 19 20 — GRD

TERMINALS 8, 12 & 19 WILL ACCEPT UP 1/0 SIZE WIRE

LTN

BW-1	1	63	RTO-4
BW-2	2	64	RTO-5
BW-3	3	65	
BW-4	4	66	
BW-5	5	67	
BW-6	6	68	
BW-7	7	69	
BW-8	8	70	
BW-9	9	71	
BW-10	10	72	
BW-11	11	73	
BW-12	12	74	
BW-13	13	75	
BW-14	14	76	
BW-15	15	77	
BW-16	16	78	
BW-17	17	79	
BW-19	18	80	
BW-18	19	81	
BW-20	20	82	
BZ-1	21	83	
BZ-2	22	84	
BZ-3	23	85	
BZ-4	24	86	
BZ-5	25	87	
BZ-6	26	88	
BZ-7	27	89	
BZ-8	28	90	
BZ-9	29	91	
BZ-10	30	92	
BZ-11	31	93	
BZ-12	32	94	
BZ-13	33	95	
BZ-14	34	96	
BZ-15	35	97	
BZ-16	36	98	
BZ-17	37	99	LTO-3
BZ-19	38	100	RTO-6
BZ-18	39	101	
BZ-20	40	102	

JUMP 1 & 37 [R]

PTD

(57)

1	P(+)	BF-1,BV-1##10
2	N(-)	BF-3,BV-3##10

LTO

1	. BU-2
2	. RTN-4
3	. LTN-37
4	. RTN-6
5	. RTO-7
6	. RTO-8
7	. RTO-9
8	. RTO-10
9	. RTO-11
10	. RTO-12
11	. RTO-13
12	. RTO-14
13	. RTO-15
14	. RTO-16
15	.
16	.
17	.
18	.
19	.
20	.
21	.
22	.
23	.
24	.

BU

1=BV-1#10
2=LTO-1,RTN-2
3=BV-3#10
4=RTN-3

(20) (21) 1 2 / (21) 3 4 — 15A — 8C

BV

1=BU-1,PTD-1##10
2=RTO-4
3=BU-3,PTD-2##10
4=RTN-7

(20) (21) 1 2 / (21) 3 4 — 15A — 8T

BW

1=LTN-1	11=LTN-11
2=LTN-2	12=LTN-12
3=LTN-3	13=LTN-13
4=LTN-4	14=LTN-14
5=LTN-5	15=LTN-15
6=LTN-6	16=LTN-16
7=LTN-7	17=LTN-17
8=LTN-8	18=LTN-19
9=LTN-9	19=LTN-18
10=LTN-10	20=LTN-20

(41) 1 3 5 7 9 11 13 15 17 18 / 2 4 6 8 10 12 14 16 19 20 — 52S

DEVICE MOUNTING PANEL

BZ

1=LTN-21	11=LTN-31
2=LTN-22	12=LTN-32
3=LTN-23	13=LTN-33
4=LTN-24	14=LTN-34
5=LTN-25	15=LTN-35
6=LTN-26	16=LTN-36
7=LTN-27	17=LTN-37
8=LTN-28	18=LTN-39
9=LTN-29	19=LTN-38
10=LTN-30	20=LTN-40

(42) 18 17 15 13 11 9 7 5 3 1 / 20 19 16 14 12 10 8 6 4 2 — 52H

(30) A X2 X1 — CN
X1=STN-1#10
X2=CO-X2#10

(30) B X2 X1 — CO
X1=STN-2#10
X2=CN-X2,CP-X2##10

(30) C X2 X1 — CP
X1=STN-3#10
X2=CO-X2,STN-4##10

(A) (B) (C)

SDL

1=RTN-2	13=RTN-16
2=RTN-3	14=RTN-17
3=RTN-4	15=RTN-18
4=RTN-6	16=RTN-19
5=RTN-7	17=RTN-20
6=RTN-1	18=RTN-11
7=RTN-8	19=RTN-12
8=RTN-5	20=RTN-10
9=RTN-9	21=RTN-21
10=RTN-13	22=RTN-22
11=RTN-14	23=RTN-23
12=RTN-15	24=RTN-24

SDL 12 11 10 9 8 7 6 5 4 3 2 1 / 24 23 22 21 20 19 18 17 16 15 14 13 — REAR VIEW OF SECONDARY DISCONNECT

(31) STN

CN-X1#10	1	1A	DL7D-G7#10
CO-X1#10	2	2A	DL7D-G8#10
CP-X1#10	3	3A	DL7D-G9#10
CP-X2,G-3##10	4	4A	DL7D-H10#10

RTO

DL7D-G5	1	. LTI-6
DL7D-H5	2	. LTI-7
DL7D-G6	3	. LTI-8
DL4A-1	4	. BV-2,LTN-1
DL7D-C1	5	. LTN-2
DL7D-C2	6	. LTN-38
DL7D-C3	7	. LTO-5
DL7D-C4	8	. LTO-6
DL7D-C5	9	. LTO-7
DL7D-C6	10	. LTO-8
DL7D-F11	11	. LTO-9
DL7D-F12	12	. LTO-10
DL7D-E12	13	. LTO-11
DL7D-E4	14	. LTO-12
DL7D-F4	15	. LTO-13
DL7D-E5	16	. LTO-14
	17	.
	18	.
	19	.
	20	.
	21	.
	22	.
	23	.
	24	.

RTN

SDL-6	1	4	
SDL-1	2	5	BU-2,DL5B-16
SDL-2	3	6	BU-4
SDL-3	4	7	DL5B-17,LTO-2
SDL-8	5	8	
SDL-4	6	9	DL6A-2,LTO-4
SDL-5	7	10	BV-4
SDL-7	8	13	DL4A-2
SDL-9	9	14	DL7D-D12
SDL-20	10	27	
SDL-18	11	28	
SDL-19	12	29	
SDL-10	13	51	
SDL-11	14	52	
SDL-12	15	53	
SDL-13	16	54	
SDL-14	17	55	
SDL-15	18	56	
SDL-16	19	57	
SDL-17	20	58	
SDL-21	21	59	
SDL-22	22	60	
SDL-23	23	61	
SDL-24	24	62	

JUMP 7 & 9 [R]

LEFT SIDE PANEL

RIGHT SIDE PANEL

SECTION 2

SERIES 5

REV	DESCRIPTION	BY	DATE
—	—	—	— / — / —

JOB NAME: BUILDING #22 RENOVATIONS
JOB LOCATION: ALBANY, NY
DRAWN BY: J.RUSH
ENGR: VAN N. NGUYEN
DATE: JUNE 26, 2006
DRAWING STATUS: RECORD

EQUIPMENT DESIGNATION: PRIMARY SWITCH "B"
EQUIPMENT TYPE: MASTERCLAD SWITCHGEAR
DRAWING TYPE: WIRING DIAGRAM

SQUARE D COMPANY
Schneider Electric

DWG# W21295878-002-02

PG 1 OF 2 REV —

WIRE ROUTING EXAMPLE

1=BA-1,BD-2#SIZE

- NON-STANDARD WIRE SIZE
- DESTINATION PIN NUMBER
- SECOND DESTINATION
- DESTINATION PIN NUMBER
- FIRST DESTINATION
- DEVICE TERMINAL NUMBER

(--) ITEM NUMBER-SEE ELECTRICAL BILL OF MATERIAL

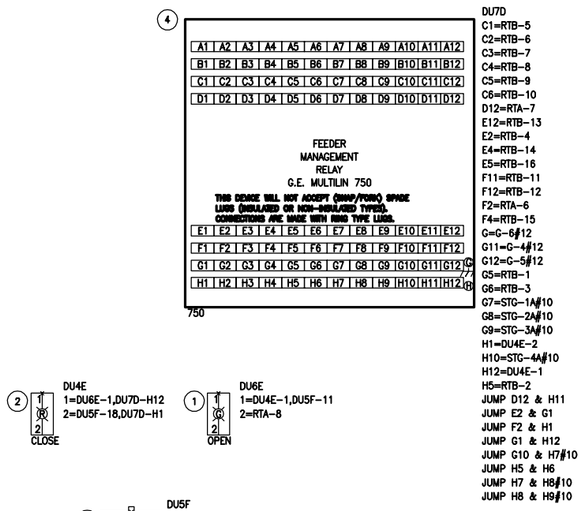

REAR VIEW UPPER DOOR

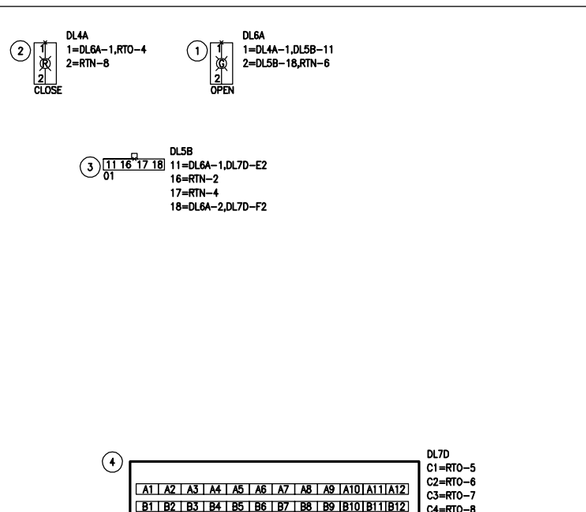

REAR VIEW LOWER DOOR

SECTION 2

SERIES 5

REV	DESCRIPTION	BY	DATE
–	– – – –	– –	– – / – – / – –

JOB NAME:	BUILDING #22 RENOVATIONS
JOB LOCATION:	ALBANY, NY
DRAWN BY:	J.RUSH
ENGR:	VAN N. NGUYEN
DATE:	JUNE 26, 2006
DRAWING STATUS:	RECORD
EQUIPMENT DESIGNATION:	PRIMARY SWITCH "B"
EQUIPMENT TYPE:	MASTERCLAD SWITCHGEAR
DRAWING TYPE:	WIRING DIAGRAM

SQUARE D COMPANY
Schneider Electric

DWG# W21295878-002-02 | PG 2 OF 2 | REV –

WIRE ROUTING EXAMPLE

1=BA-1,BD-2#SIZE

- NON-STANDARD WIRE SIZE
- DESTINATION PIN NUMBER
- SECOND DESTINATION
- DESTINATION PIN NUMBER
- FIRST DESTINATION
- DEVICE TERMINAL NUMBER

ITEM NUMBER-SEE ELECTRICAL BILL OF MATERIAL.

LTI

1	.
2	.
3	.
4	.
5	.
6	. RTB-4
7	. RTB-5
8	. RTB-6
9	.
10	.
11	.
12	.

LTM

1	GR
2	WH
3	RED
4	BK
5	SH

LTB

1	.
2	. CUSTOMER CONNECTION 125VDC VOLTAGE SENSOR RELAY CONTACTS
3	.
4	.
5	.
6	.
7	. RTO-32
8	. RTO-33
9	. LTO-2,RTO-9
10	. RTO-10
11	. DU5C-15#18*RED
12	. DU5C-14#18*BLK
13	. DU5C-13#18*WHT
14	. G-11#12 SHIELD
15	. BX-1
16	. RTO-34
17	. RTO-35
18	.
19	.
20	.

CUSTOMER KYZ FROM CM4

BELDEN 9365

WIRING NOTES:
1. MAINTAIN PHASE TO GROUND CLEARANCES BETWEEN HIGH AND LOW VOLTAGE.
2. WIRES A,B,C ARE HIGH VOLTAGE SWITCHGEAR CABLE.

VT1
1=BFU-1
2=G-3#12,RTB-2
3=BFU-3
GW=G-1#12

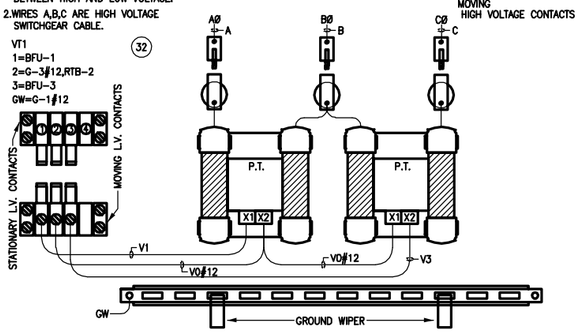

"A" COMPARTMENT

WIRING NOTES:
1. MAINTAIN PHASE TO GROUND CLEARANCES BETWEEN HIGH AND LOW VOLTAGE.
2. WIRES A,B,C ARE HIGH VOLTAGE SWITCHGEAR CABLE.

VT2
1=BFU-5
2=G-4#12,RTB-5
3=BFU-7
GW=G-2#12

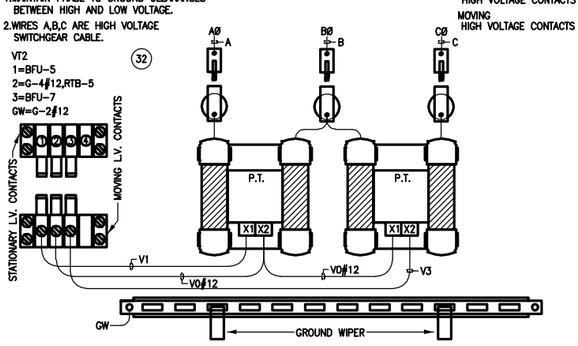

"B" COMPARTMENT

RTB

DU8E-1	1	. BFU-2,RTO-1
DU8E-2	2	. RTO-2,VT1-2
DU6E-2	3	. BFU-4,RTO-3
DU4E-1	4	. BFU-6,LTI-6
DU4E-2	5	. LTI-7,VT2-2
DU2E-2	6	. BFU-8,LTI-8
DU5C-8#10	7	. RTO-4#10
DU5C-6#10	8	. RTO-5#10
DU5C-4#10	9	. RTO-6#10
DU5C-3#10	10	. RTO-7#10
DU5C-25	11	. BY-2
DU5C-27	12	. BY-4
DU5A-18	13	.
DU5B-18	14	.
	15	. LTO-9
DU5A-16	16	. LTO-10
	17	. LTO-11
DU5A-17	18	. LTO-12
	19	. LTO-13
DU5B-14	20	. LTO-14
	21	. LTO-15
DU5B-15	22	. LTO-16
	23	. LTO-17
DU5B-16	24	. LTO-18
	25	. LTO-19
DU5B-17	26	. LTO-20
DU5A-14	27	. LTN-14
DU5A-15	28	. LTN-40
	29	.
	30	.

JUMP 11 & 15 [R]
JUMP 12 & 13 [R]
JUMP 13 & 14 [R]
JUMP 15 & 17 [L]
JUMP 17 & 19 [R]
JUMP 19 & 21 [L]
JUMP 21 & 23 [R]
JUMP 23 & 25 [L]

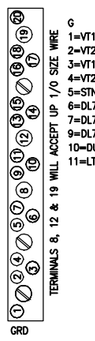

G
1=VT1-GW#12
2=VT2-GW#12
3=VT1-2#12
4=VT2-2#12
5=STN-4#10
6=DL7D-G11#12
7=DL7D-G12#12
9=DL7D-G#12
10=DU5C-26#12
11=LTB-14#12

RTD

DU5A-13	1	. LTO-21
DU5A-11	2	. LTO-22
DU5A-12	3	. LTO-23
DU5A-3	4	. LTO-24
DU5A-1	5	. LTO-25
DU5A-2	6	. LTO-26
DU5A-6	7	. LTO-27
DU5A-4	8	. LTO-28
DU5A-5	9	. LTO-29
DU5A-9	10	. LTO-30
DU5A-7	11	. LTO-31
DU5A-8	12	. LTO-32
DU5B-13	13	. LTO-33
DU5B-11	14	. LTO-34
DU5B-12	15	. LTO-35
DU5B-3	16	. LTO-36
DU5B-1	17	. LTO-37
DU5B-2	18	. LTO-38
DU5B-6	19	. LTO-39
DU5B-4	20	. LTO-40
DU5B-5	21	. LTO-41
DU5B-9	22	. LTO-42
DU5B-7	23	. LTO-43
DU5B-8	24	. LTO-44
	25	.

MOUNTED ABOVE PANDUIT

PTD (57)

125VDC INTERCONNECTS

1	P(+)	BU-1#10
2	N(-)	BY-3#10

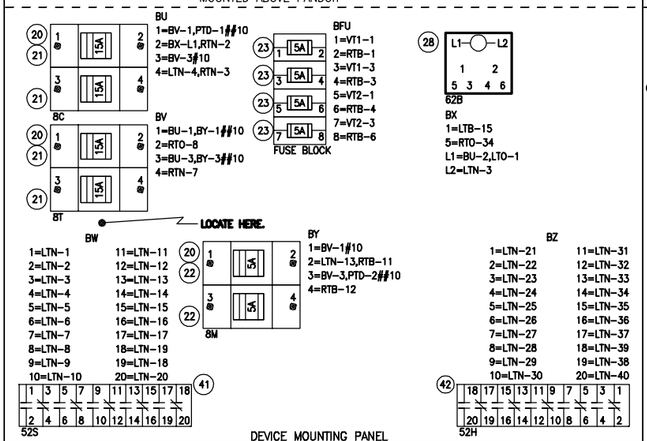

DEVICE MOUNTING PANEL

LTN

BW-1	1	63	RTO-8
BW-2	2	64	RTO-12
BW-3	3	65	BX-L2
BW-4	4	66	BU-4
BW-5	5	67	
BW-6	6	68	
BW-7	7	69	
BW-8	8	70	
BW-9	9	71	
BW-10	10	72	
BW-11	11	73	
BW-12	12	74	
BW-13	13	75	BY-2
BW-14	14	76	RTB-27
BW-15	15	77	
BW-16	16	78	
BW-17	17	79	
BW-19	18	80	
BW-18	19	81	
BW-20	20	82	
BZ-1	21	83	
BZ-2	22	84	
BZ-3	23	85	
BZ-4	24	86	
BZ-5	25	87	
BZ-6	26	88	
BZ-7	27	89	
BZ-8	28	90	
BZ-9	29	91	
BZ-10	30	92	
BZ-11	31	93	
BZ-12	32	94	
BZ-13	33	95	
BZ-14	34	96	
BZ-15	35	97	
BZ-16	36	98	
BZ-17	37	99	LTO-3
BZ-19	38	100	RTO-13
BZ-18	39	101	
BZ-20	40	102	RTB-28

JUMP 1 & 37 [R]
JUMP 13 & 39 [R]

LTO

1	.	BX-L1
2	.	LTB-9
3	.	LTN-37
4	.	RTN-6
5	.	RTO-14
6	.	RTO-15
7	.	RTO-16
8	.	RTO-17
9	.	RTB-15
10	.	RTB-16
11	.	RTB-17
12	.	RTB-18
13	.	RTB-19
14	.	RTB-20
15	.	RTB-21
16	.	RTB-22
17	.	RTB-23
18	.	RTB-24
19	.	RTB-25
20	.	RTB-26
21	.	RTD-1
22	.	RTD-2
23	.	RTD-3
24	.	RTD-4
25	.	RTD-5
26	.	RTD-6
27	.	RTD-7
28	.	RTD-8
29	.	RTD-9
30	.	RTD-10
31	.	RTD-11
32	.	RTD-12
33	.	RTD-13
34	.	RTD-14
35	.	RTD-15
36	.	RTD-16
37	.	RTD-17
38	.	RTD-18
39	.	RTD-19
40	.	RTD-20
41	.	RTD-21
42	.	RTD-22
43	.	RTD-23
44	.	RTD-24
45	.	RTO-18
46	.	RTO-19
47	.	RTO-20
48	.	RTO-21
49	.	RTO-22
50	.	RTO-23
51	.	RTO-24
52	.	RTO-25
53	.	RTO-26
54	.	RTO-27
55	.	RTO-28
56	.	RTO-29
57	.	RTO-30
58	.	RTO-31
59	.	
60	.	

LTP

1	.
2	.
3	.
4	.
5	.
6	.
7	.
8	.
9	.
10	.
11	.
12	.

CUSTOMER SPARES

LEFT SIDE PANEL

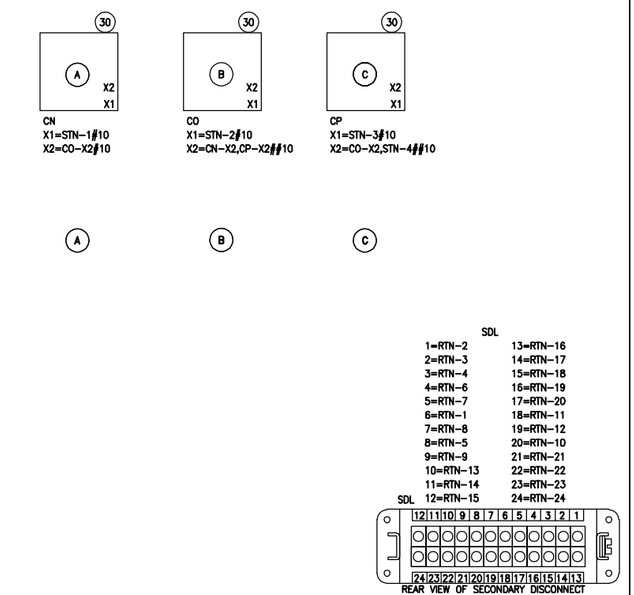

31 STN

CN-X1#10	1	1A	DL3C-6#10
CO-X1#10	2	2A	DL3C-10#10
CP-X1#10	3	3A	DL3C-14#10
CP-X2,G-5##10	4	4A	DL3C-16#10

RTO

DL3C-2	1	. RTB-1
DL7D-H5	2	. RTB-2
DL3C-20	3	. RTB-3
DL3C-4#10	4	. RTB-7#10
DL3C-8#10	5	. RTB-8#10
DL3C-12#10	6	. RTB-9#10
DL3C-18#10	7	. RTB-10#10
DL4A-1	8	. BV-2,LTN-1
DL5B-17	9	. LTB-9
DL7B-11	10	. LTB-10
DL4A-2,DL5B-18	11	. RTN-6
DL7D-C1	12	. LTN-2
DL7D-C2	13	. LTN-38
DL7D-C3	14	. LTO-5
DL7D-C4	15	. LTO-6
DL7D-C5	16	. LTO-7
DL7D-C6	17	. LTO-8
DL7B-51	18	. LTO-45
DL7B-53	19	. LTO-46
DL7B-52	20	. LTO-47
DL7B-58	21	. LTO-48
DL7B-55	22	. LTO-49
DL7B-57	23	. LTO-50
DL7B-56	24	. LTO-51
DL7B-54	25	. LTO-52
DL7D-F11	26	. LTO-53
DL7D-F12	27	. LTO-54
DL7D-E12	28	. LTO-55
DL7D-E4	29	. LTO-56
DL7D-F4	30	. LTO-57
DL7D-E5	31	. LTO-58
DL7B-21	32	. LTB-7
DL7B-23	33	. LTB-8
DL7B-15	34	. BX-5,LTB-16
DL7B-17	35	. LTB-17
	36	.

RTN

SDL-6	1	4
SDL-1	2	5 BU-2,DL5B-16
SDL-2	3	6 BU-4
SDL-3	4	7 DL7B-13
SDL-8	5	8
SDL-4	6	9 LTO-4,RTO-11
SDL-5	7	10 BV-4
SDL-7	8	13 DL6A-2
SDL-9	9	14 DL7B-28
SDL-20	10	27
SDL-18	11	28
SDL-19	12	29
SDL-10	13	51
SDL-11	14	52
SDL-12	15	53
SDL-13	16	54
SDL-14	17	55
SDL-15	18	56
SDL-16	19	57
SDL-17	20	58
SDL-21	21	59
SDL-22	22	60
SDL-23	23	61
SDL-24	24	62

JUMP 7 & 9 [R]

RIGHT SIDE PANEL

SECTION 3

SERIES 5

REV	DESCRIPTION	BY	DATE

JOB NAME: BUILDING #22 RENOVATIONS
JOB LOCATION: ALBANY, NY
DRAWN BY: J.RUSH
ENGR: VAN N. NGUYEN
DATE: JUNE 26, 2006
DRAWING STATUS: RECORD

EQUIPMENT DESIGNATION: -PRIMARY SWITCH "B"
EQUIPMENT TYPE: MASTERCLAD SWITCHGEAR
DRAWING TYPE: WIRING DIAGRAM

SQUARE D COMPANY
Schneider Electric

DWG# W21295878-002-03 | PG 1 OF 2 | REV –

WIRE ROUTING EXAMPLE
1=BA-1,BD-2#SIZE
- NON-STANDARD WIRE SIZE
- DESTINATION PIN NUMBER
- SECOND DESTINATION
- DESTINATION PIN NUMBER
- FIRST DESTINATION
- DEVICE TERMINAL NUMBER

(---) ITEM NUMBER-SEE ELECTRICAL BILL OF MATERIAL

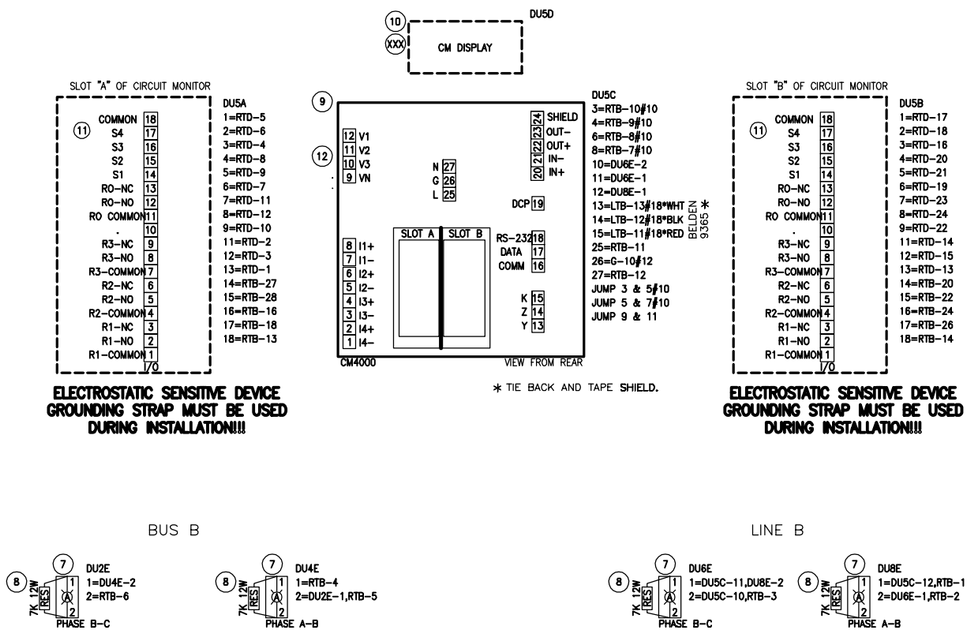

ELECTROSTATIC SENSITIVE DEVICE GROUNDING STRAP MUST BE USED DURING INSTALLATION!!!

ELECTROSTATIC SENSITIVE DEVICE GROUNDING STRAP MUST BE USED DURING INSTALLATION!!!

BUS B

LINE B

REAR VIEW UPPER DOOR

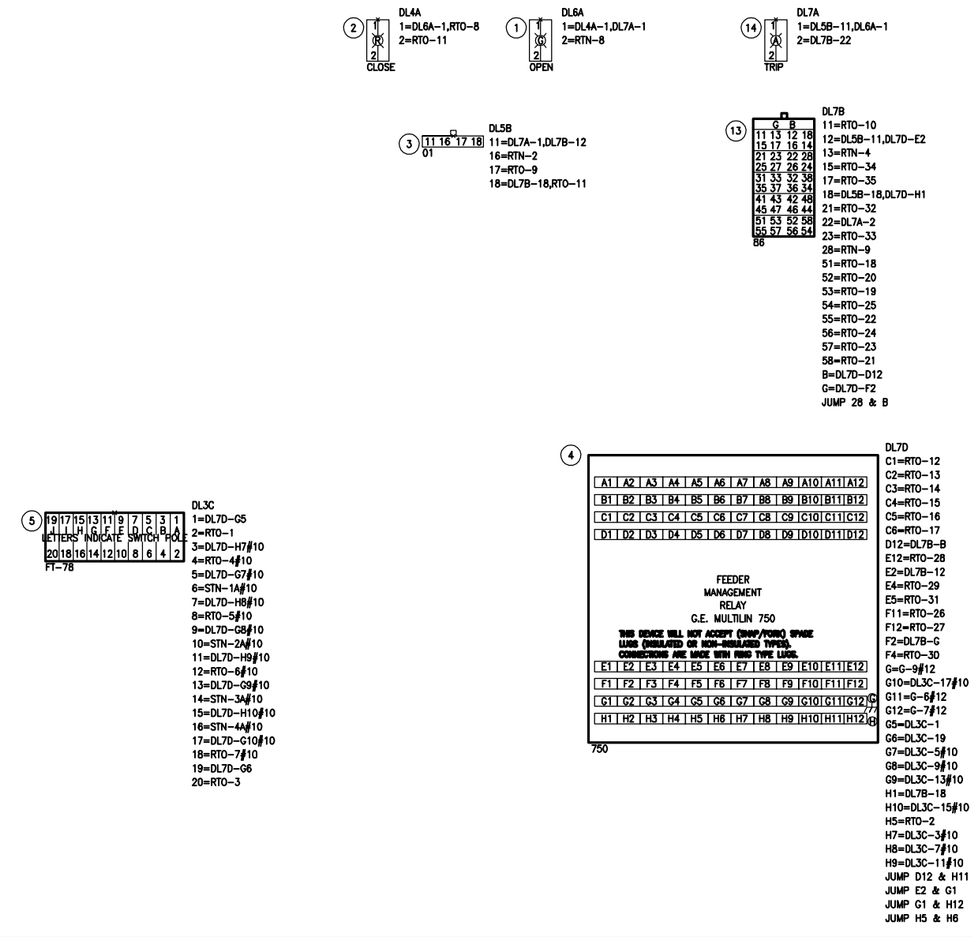

REAR VIEW LOWER DOOR

SECTION 3

SERIES 5

REV	DESCRIPTION	BY	DATE
–			

JOB NAME: BUILDING #22 RENOVATIONS
JOB LOCATION: ALBANY, NY
DRAWN BY: J.RUSH
ENGR: VAN N. NGUYEN
DATE: JUNE 26, 2006
DRAWING STATUS: RECORD

EQUIPMENT DESIGNATION: PRIMARY SWITCH "B"
EQUIPMENT TYPE: MASTERCLAD SWITCHGEAR
DRAWING TYPE: WIRING DIAGRAM

SQUARE D COMPANY
Schneider Electric

DWG# W21295878-002-03
PG 2 OF 2
REV –

WIRE ROUTING EXAMPLE

1=BA-1,BD-2#SIZE

- NON-STANDARD WIRE SIZE
- DESTINATION PIN NUMBER
- SECOND DESTINATION
- DESTINATION PIN NUMBER
- FIRST DESTINATION
- DEVICE TERMINAL NUMBER

(--) ITEM NUMBER-SEE ELECTRICAL BILL OF MATERIAL

BA

1=LTA-1	11=LTA-11
2=LTA-2	12=LTA-12
3=LTA-3	13=LTA-13
4=LTA-4	14=LTA-14
5=LTA-5	15=LTA-15
6=LTA-6	16=LTA-16
7=LTA-7	17=LTA-17
8=LTA-8	18=LTA-19
9=LTA-9	19=LTA-18
10=LTA-10	20=LTA-20

(41) 1 3 5 7 9 11 13 15 17 18 / 2 4 6 8 10 12 14 16 19 20 — 52S

BD

1=LTA-21	11=LTA-31
2=LTA-22	12=LTA-32
3=LTA-23	13=LTA-33
4=LTA-24	14=LTA-34
5=LTA-25	15=LTA-35
6=LTA-26	16=LTA-36
7=LTA-27	17=LTA-37
8=LTA-28	18=LTA-39
9=LTA-29	19=LTA-38
10=LTA-30	20=LTA-40

(42) 18 17 15 13 11 9 7 5 3 1 / 20 19 16 14 12 10 8 6 4 2 — 52H

RTA

SDU-6	1	4	
SDU-1	2	5	DU5F-16,BE-2
SDU-2	3	6	BE-4
SDU-3	4	7	LTB-6
SDU-8	5	8	
SDU-4	6	9	DU7D-F2,LTB-4
SDU-5	7	10	DU7D-D12
SDU-7	8	13	DU6E-2
SDU-9	9	14	BF-4
SDU-20	10	27	
SDU-18	11	28	
SDU-19	12	29	
SDU-10	13	51	
SDU-11	14	52	
SDU-12	15	53	
SDU-13	16	54	
SDU-14	17	55	
SDU-15	18	56	
SDU-16	19	57	
SDU-17	20	58	
SDU-21	21	59	
SDU-22	22	60	
SDU-23	23	61	
SDU-24	24	62	

JUMP 7 & 9 [R]

RTB

DU7D-G5	1	LTI-6
DU7D-H5	2	LTI-7
DU7D-G6	3	LTI-8
DU7D-C12	4	BF-2,LTA-1
DU5F-17	5	LTB-2
DU7D-C1	6	LTA-2
DU7D-C2	7	LTA-38
DU7D-C3	8	LTO-1
DU7D-C4	9	LTO-2
DU7D-C5	10	LTO-3
DU7D-C6	11	LTO-4
DU7D-F11	12	LTO-5
DU7D-F12	13	LTO-6
DU7D-E12	14	LTO-7
DU7D-E4	15	LTO-8
DU7D-F4	16	LTO-9
DU7D-E5	17	LTO-10
	18	
	19	
	20	
	21	
	22	
	23	
	24	

LTA

BA-1	1	63	RTB-4
BA-2	2	64	RTB-6
BA-3	3	65	
BA-4	4	66	
BA-5	5	67	
BA-6	6	68	
BA-7	7	69	
BA-8	8	70	
BA-9	9	71	
BA-10	10	72	
BA-11	11	73	
BA-12	12	74	
BA-13	13	75	
BA-14	14	76	
BA-15	15	77	
BA-16	16	78	
BA-17	17	79	
BA-19	18	80	
BA-18	19	81	
BA-20	20	82	
BD-1	21	83	
BD-2	22	84	
BD-3	23	85	
BD-4	24	86	
BD-5	25	87	
BD-6	26	88	
BD-7	27	89	
BD-8	28	90	
BD-9	29	91	
BD-10	30	92	
BD-11	31	93	
BD-12	32	94	
BD-13	33	95	
BD-14	34	96	
BD-15	35	97	
BD-16	36	98	
BD-17	37	99	LTB-3
BD-19	38	100	RTB-7
BD-18	39	101	
BD-20	40	102	

JUMP 1 & 37 [R]

LTI

1	.	
2	.	
3	.	
4	.	
5	.	
6	.	RTB-1
7	.	RTB-2
8	.	RTB-3
9	.	
10	.	
11	.	
12	.	

LTB

1	.	BE-2
2	.	RTB-5
3	.	LTA-37
4	.	RTA-6
5	.	
6	.	RTA-4
7	.	BXY-2#12
8	.	BXY-3#12
9	.	BXY-4#12
10	.	BXY-7#12
11	.	BXY-6#12
12	.	BXY-5#12
13	.	
14	.	
15	.	
16	.	
17	.	
18	.	
19	.	
20	.	
21	.	
22	.	
23	.	
24	.	

JUMP 2 & 5 [R]

LTM

CUSTOMER COMMUNICATION CONNECTION

1	GR
2	WH
3	RED
4	BK
5	SH

(A) (B) (C)

(30) (A) X2 X1 — CG
X1=STG-1#10
X2=CH-X2#10

(30) (B) X2 X1 — CH
X1=STG-2#10
X2=CG-X2,CI-X2##10

(30) (C) X2 X1 — CI
X1=STG-3#10
X2=CH-X2,STG-4##10

SDU

1=RTA-2	13=RTA-16
2=RTA-3	14=RTA-17
3=RTA-4	15=RTA-18
4=RTA-6	16=RTA-19
5=RTA-7	17=RTA-20
6=RTA-1	18=RTA-11
7=RTA-8	19=RTA-12
8=RTA-5	20=RTA-10
9=RTA-9	21=RTA-21
10=RTA-13	22=RTA-22
11=RTA-14	23=RTA-23
12=RTA-15	24=RTA-24

SDU 12 11 10 9 8 7 6 5 4 3 2 1 / 24 23 22 21 20 19 18 17 16 15 14 13

REAR VIEW OF SECONDARY DISCONNECT

(31) **STG**

CG-X1#10	1	1A	DU7D-G7#10
CH-X1#10	2	2A	DU7D-G8#10
CI-X1#10	3	3A	DU7D-G9#10
CI-X2,G-2##10	4	4A	DU7D-H10#10

G

2=STG-4#10
17=DU7D-G#12
18=DU7D-G12#12
20=DU7D-G11#12

(20) (21) 1 2 / 3 4 — 15A — 8C

BE

1=BF-1#10
2=LTB-1,RTA-2
3=BF-3#10
4=RTA-3

(20) (21) 1 2 / 3 4 — 15A — 8T

BF

1=BE-1,PTD-1##10
2=RTB-4
3=BE-3,PTD-2##10
4=RTA-9

(24) (25) (26) (27) 6 5 4 3 / 7 8 1 2 — 27DC

BXY

1=PTD1-1#10
2=LTB-7#12
3=LTB-8#12
4=LTB-9#12
5=LTB-12#12
6=LTB-11#12
7=LTB-10#12
8=PTD1-2#10

GRD ① ② ③ ④ ⑤ ⑥ ⑦ ⑧ ⑨ ⑩ ⑪ ⑫ ⑬ ⑭ ⑮ ⑯ ⑰ ⑱ ⑲ ⑳

TERMINALS 8, 12 & 19 WILL ACCEPT UP 1/0 SIZE WIRE

DEVICE MOUNTING PANEL

PTD1 (57)

125VDC FROM BATTERIES

1	P(+)	PTD-2#4,BXY-1#10
2	N(-)	PTD-1#4,BXY-8#10

PTD (57)

125VDC INTERCONNECTS

1	P(+)	PTD1-2#4,BF-1#10
2	N(-)	PTD1-1#4,BF-3#10

LTO

1	.	RTB-8
2	.	RTB-9
3	.	RTB-10
4	.	RTB-11
5	.	RTB-12
6	.	RTB-13
7	.	RTB-14
8	.	RTB-15
9	.	RTB-16
10	.	RTB-17
11	.	
12	.	

LEFT SIDE PANEL

RIGHT SIDE PANEL

JOB NAME:	BUILDING #22 RENOVATIONS
JOB LOCATION:	ALBANY, NY
DRAWN BY:	J.RUSH
ENGR:	VAN N. NGUYEN
DATE:	JUNE 26, 2006
DRAWING STATUS:	RECORD
EQUIPMENT DESIGNATION:	PRIMARY SWITCH "B"
EQUIPMENT TYPE:	MASTERCLAD SWITCHGEAR
DRAWING TYPE:	WIRING DIAGRAM
DWG#	W212958878-002-04
PG	1 OF 2
REV	—

SQUARE D COMPANY
Schneider Electric

REV	DESCRIPTION	BY	DATE
—	—	—	—

SECTION 4

SERIES 5

WIRE ROUTING EXAMPLE

1=BA-1,BD-2#SIZE

- NON-STANDARD WIRE SIZE
- DESTINATION PIN NUMBER
- SECOND DESTINATION
- DESTINATION PIN NUMBER
- FIRST DESTINATION
- DEVICE TERMINAL NUMBER

(1-) ITEM NUMBER-SEE ELECTRICAL BILL OF MATERIAL

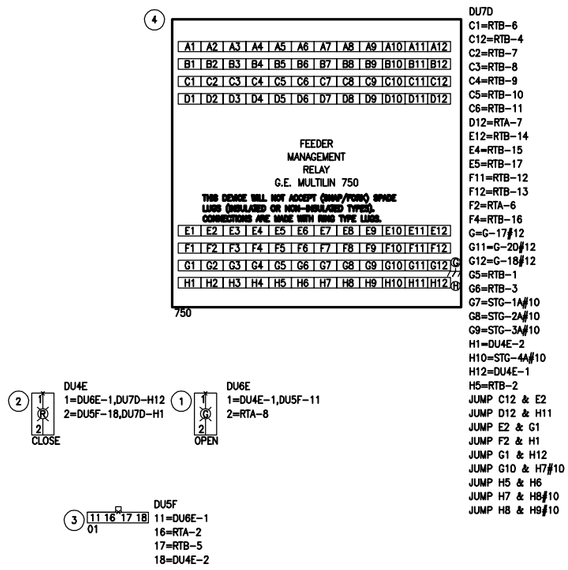

REAR VIEW UPPER DOOR

REAR VIEW LOWER DOOR

SECTION 4

SERIES 5

REV	DESCRIPTION	BY	DATE
–	– – – –	– –	– – / – – / – –
–	– – – – –	– –	– – / – – / – –
–	– – – – –	– –	– – / – – / – –

JOB NAME:	BUILDING #22 RENOVATIONS
JOB LOCATION:	ALBANY, NY
DRAWN BY:	J.RUSH
ENGR:	VAN N. NGUYEN
DATE:	JUNE 26, 2006
DRAWING STATUS:	RECORD
EQUIPMENT DESIGNATION:	PRIMARY SWITCH "B"
EQUIPMENT TYPE:	MASTERCLAD SWITCHGEAR
DRAWING TYPE:	WIRING DIAGRAM

SQUARE D COMPANY
Schneider Electric

DWG# W21295878-002-04 | PG 2 OF 2 | REV –

REV	DESCRIPTION	BY	DATE	–	----	--	--/--/--	–	----	--	--/--/--
–	----	–	--/--/--	–	----	--	--/--	–	----	--	--/--

PRIMARY SWITCH "B" FO#21295878-002

Section 1

Section 2

[2] LTI

	1	.
	2	.
	3	.
	4	.
	5	.
[3]LTI-6	6	.
[3]LTI-7	7	.
[3]LTI-8	8	.
	9	.
	10	.
	11	.
	12	.

[2] PTD (57)

[3]PTD-1#4	1	P(+)
[3]PTD-2#4	2	N(-)

Section 3

[3] LTI

	1	.
	2	.
	3	.
	4	.
	5	.
[2]LTI-6,[4]LTI-6	6	.
[2]LTI-7,[4]LTI-7	7	.
[2]LTI-8,[4]LTI-8	8	.
	9	.
	10	.
	11	.
	12	.

[3] PTD (57)

[2]PTD-1,[4]PTD-1##4	1	P(+)
[2]PTD-2,[4]PTD-2##4	2	N(-)

[3] LTB

[4]LTB-7#12	1	.
[4]LTB-8#12	2	.
[4]LTB-9#12	3	.
[4]LTB-10#12	4	.
[4]LTB-11#12	5	.
[4]LTB-12#12	6	.
[4].LTB-5	7	.
*[003/2]LTB-17	8	.
*[003/1]LTB-15	9	.
*[003/1]LTB-16	10	.
	11	.
	12	.
	13	.
	14	.
	15	.
	16	.
	17	.
	18	.
	19	.
	20	.

Section 4

[4] LTI

	1	.
	2	.
	3	.
	4	.
	5	.
[3]LTI-6	6	.
[3]LTI-7	7	.
[3]LTI-8	8	.
	9	.
	10	.
	11	.
	12	.

[4] PTD (57)

[3]PTD-1#4	1	P(+)
[3]PTD-2#4	2	N(-)

[4] LTB

	1	.
	2	.
	3	.
	4	.
[3].LTB-7	5	.
*[003/2]LTB-18	6	.
[3].LTB-1#12	7	.
[3].LTB-2#12	8	.
[3].LTB-3#12	9	.
[3].LTB-4#12	10	.
[3].LTB-5#12	11	.
[3].LTB-6#12	12	.
	13	.
	14	.
	15	.
	16	.
	17	.
	18	.
	19	.
	20	.
	21	.
	22	.
	23	.
	24	.

* COIL AND SECURE 30' WITH LABELS ATTACHED FOR CONNECTIONS TO BE MADE IN FIELD.

FOR INTERCONNECTIONS BETWEEN LINE ITEMS--
EXAMPLE: [003/2]
- SECTION NUMBER
- LINE ITEM

PRIMARY SWITCH "A" FO#21295878-003

Section 1

[003/1] LTB

	1	.
	2	.
	3	.
	4	.
	5	.
	6	.
	7	.
	8	.
	9	.
	10	.
	11	.
	12	.
	13	.
	14	.
[3]LTB-9	15	.
[3]LTB-10	16	.
	17	.
	18	.
	19	.
	20	.
	21	.
	22	.
	23	.
	24	.

Section 2

[003/2] LTB

	1	.
	2	.
	3	.
	4	.
	5	.
	6	.
	7	.
	8	.
	9	.
	10	.
	11	.
	12	.
	13	.
	14	.
	15	.
	16	.
[3]LTB-8	17	.
[4]LTB-6	18	.
	19	.
	20	.

INTERCONNECTION DIAGRAM

JOB NAME:	BUILDING #22 RENOVATIONS	EQUIPMENT DESIGNATION:	**PRIMARY SWITCH "B"**
JOB LOCATION:	ALBANY, NY	EQUIPMENT TYPE:	MASTERCLAD SWITCHGEAR
DRAWN BY:	J.RUSH	DRAWING TYPE:	WIRING DIAGRAM
ENGR:	VAN N. NGUYEN		SQUARE D COMPANY Schneider Electric
DATE:	JUNE 28, 2006		
DRAWING STATUS:	RECORD	DWG#	**W21295878-002-IC** PG 1 OF 1 REV –

Attachment 5

SQUARE D COMPANY
Schneider Electric

Job Name:	BUILDING #22 RENOVATIONS	Square D Quotation #:	21295878
Job Location:	ALBANY, NY	Quotation Revision #:	
		Sales Contact:	RON MURRAY
		Sales Contact Location:	124
Purchaser:	WARREN ELECTRIC SUPPLY INC	Customer:	HUEN ELECTRIC
Purchaser PO #:	535087-DIR-0277968	Customer PO #:	
User:	NYS OGS	Architect:	URS CORPORATOIN
User Location:		Cons. Engineer:	
Drawing Status:	RECORD		

TABLE OF CONTENTS

SQUARE D FACTORY ORDER NUMBER: 21295878-007

Equipment Designation	Equipment Type	Drawing Type	Drawing Number	Page	Revision Level
SEC SWG A & B NEMA 1	PZ4 SWITCHGEAR	ELEVATION	F21295878-007-01	1	C
			F21295878-007-01	2	A
		TOP VIEW/FLOOR PLAN	F21295878-007-01	3	B
			F21295878-007-01	4	B
		GENERAL NOTES	F21295878-007-01	5	B
		PANEL DETAIL	D21295878-007-01	1	A
		ONE LINE	O21295878-007-01	1	C
			O21295878-007-01	2	C
		DEVICE TABLE	O21295878-007-01	3	C
			O21295878-007-01	4	-
		ELEMENTARY DIAGRAM	E21295878-007-01	1	A
			E21295878-007-01	2	A
			E21295878-007-01	3	C
			E21295878-007-01	4	B
			E21295878-007-01	5	A
			E21295878-007-01	6	A
			E21295878-007-01	7	A
			E21295878-007-01	8	A
			E21295878-007-01	9	A
			E21295878-007-01	10	B
			E21295878-007-01	11	A
			E21295878-007-01	12	A
			E21295878-007-01	13	A
			E21295878-007-01	14	B
			E21295878-007-02	1	C
			E21295878-007-02	2	B
			E21295878-007-02	3	B
			E21295878-007-02	4	B
			E21295878-007-03	1	A
			E21295878-007-03	2	B
			E21295878-007-03	3	A
			E21295878-007-03	4	A
			E21295878-007-04	1	B
			E21295878-007-04	2	B
			E21295878-007-05	1	B
			E21295878-007-05	2	B

These products are manufactured in a facility which is quality systems registered by Underwriters Laboratories to ISO 9000

TABLE OF CONTENTS

SQUARE D FACTORY ORDER NUMBER: 21295878-007

Equipment Designation	Equipment Type	Drawing Type	Drawing Number	Page	Revision Level
			E21295878-007-06	1	A
			E21295878-007-07	1	-
			E21295878-007-07	2	-
			E21295878-007-07	3	-
			E21295878-007-08	1	-
			E21295878-007-08	1	-
		WIRING DIAGRAM	W21295878-007-01	1	A
			W21295878-007-01	2	A
			W21295878-007-02	1	A
			W21295878-007-02	2	A
			W21295878-007-03	1	A
			W21295878-007-03	2	A
			W21295878-007-04	1	B
			W21295878-007-04	2	C
			W21295878-007-04	3	A
			W21295878-007-05	1	A
			W21295878-007-05	2	C
			W21295878-007-05	3	-
			W21295878-007-06	1	A
			W21295878-007-06	2	A
			W21295878-007-06	3	A
			W21295878-007-07	1	-
			W21295878-007-07	2	A
			W21295878-007-07	3	A
			W21295878-007-07	4	B
			W21295878-007-07	5	-
			W21295878-007-07	6	A
			W21295878-007-07	7	A
			W21295878-007-08	1	B
			W21295878-007-08	2	A
			W21295878-007-09	1	-
			W21295878-007-09	2	C
			W21295878-007-09	3	A
			W21295878-007-10	1	B
			W21295878-007-10	2	C
			W21295878-007-10	3	A
			W21295878-007-11	1	A
			W21295878-007-11	2	A
			W21295878-007-12	1	A
			W21295878-007-12	2	A
			W21295878-007-13	1	A
			W21295878-007-13	2	A
		WIRING DIAGRAM LAYOUT	I21295878-007-01	1	-
		MIMIC BUS	N21295878-007-01	1	B

REV	DESCRIPTION	BY	DATE	B	REVISED PER MARKUPS	DRF	11/07/2014	-	----	--	--/--/--
A	ADDED TOUCHSCREEN	TT	06/7/06	-	----	--	--/--/--	-	----	--	--/--/--

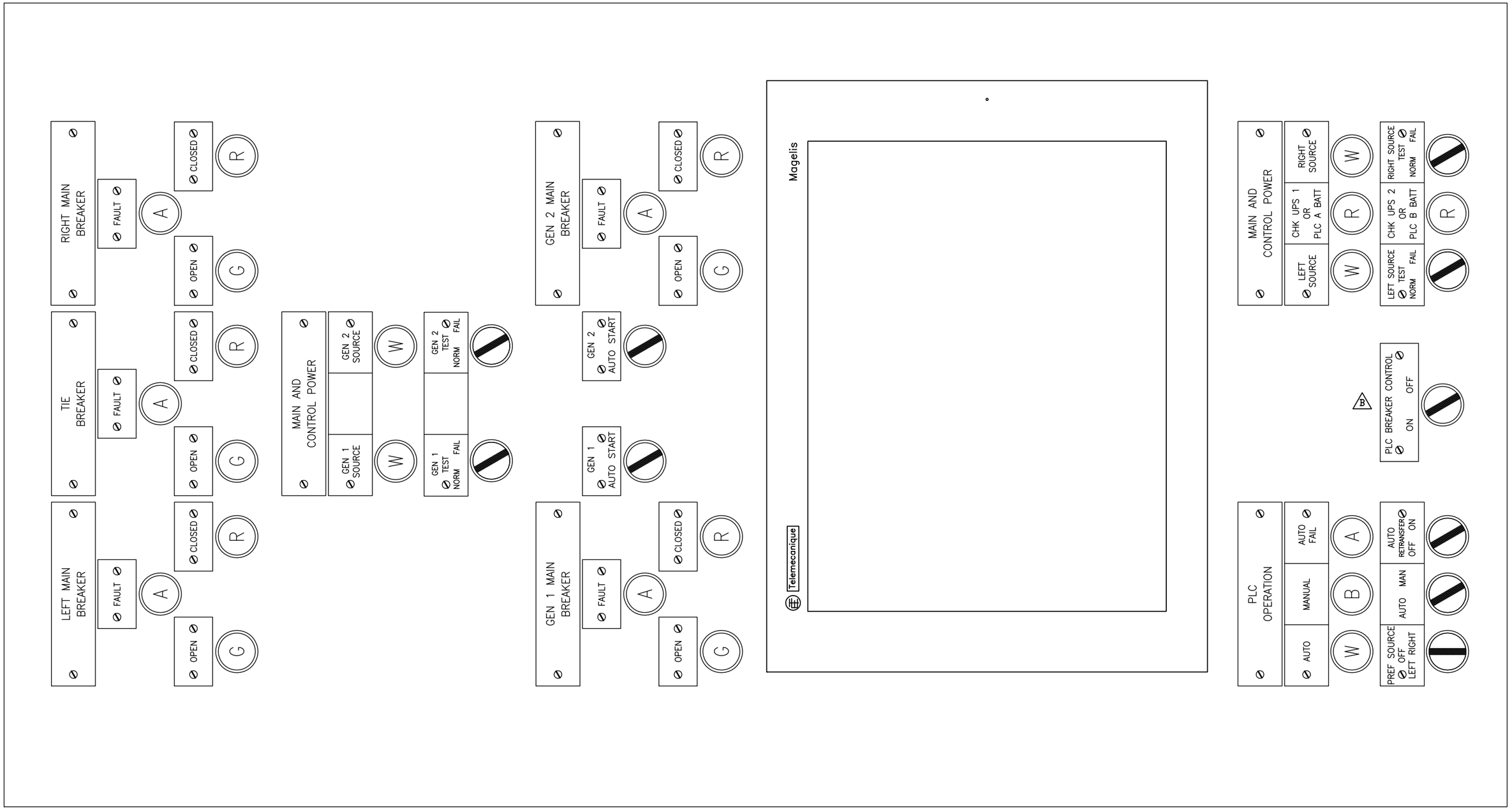

PLC DOOR DETAIL

JOB NAME:	BUILDING #22 RENOVATIONS	EQUIPMENT DESIGNATION:	SEC SWG A & B NEMA 1
JOB LOCATION:	ALBANY, NY	EQUIPMENT TYPE:	PZ4 SWITCHGEAR
DRAWN BY:	T.THOMPSON	DRAWING TYPE:	PANEL DETAIL
ENGR:	JJ		SQUARE D Schneider Electric
DATE:	DECEMBER 04, 2006		
DRAWING STATUS:	RECORD	DWG# D21295878-007-01	PG1 OF1 REV B

REV	DESCRIPTION	BY	DATE								
A	ADDED ISO TIE SECTION	JM	05/12/06	B	ADDED TOUCHSCREEN	TT	06/7/06	-	----	--	--/--/--
				C	UPS COMPT	JJ	02/27/07	-	----	--	--/--/--

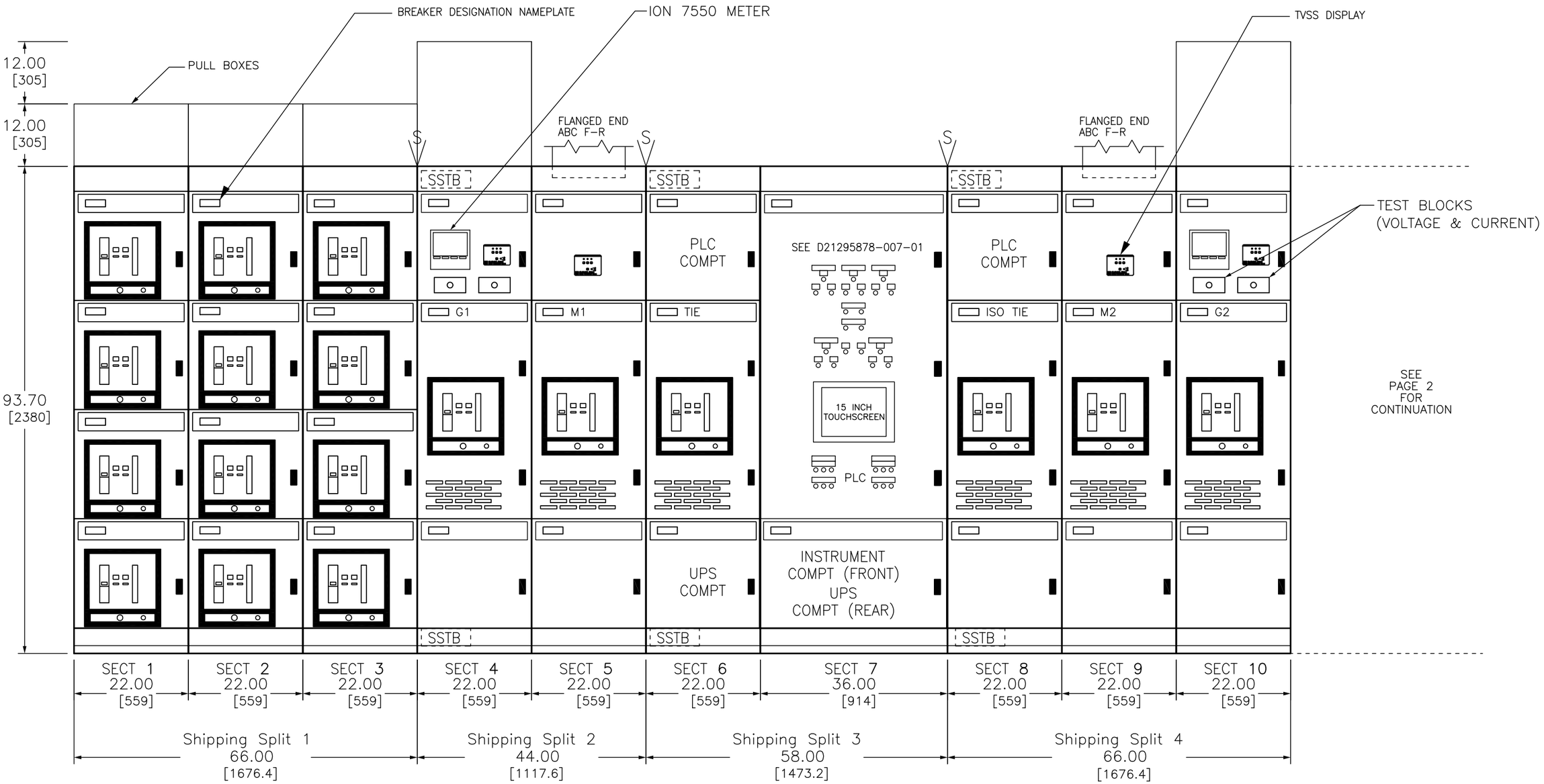

DUAL DIMENSIONS: INCHES / MILLIMETERS

FRONT ELEVATION

JOB NAME:	BUILDING #22 RENOVATIONS	EQUIPMENT DESIGNATION:	SEC SWG A & B NEMA 1
JOB LOCATION:	ALBANY, NY	EQUIPMENT TYPE:	PZ4 SWITCHGEAR
DRAWN BY:	J. BROWN	DRAWING TYPE:	ELEVATION
ENGR:	JJ		SQUARE D Schneider Electric
DATE:	DECEMBER 04, 2006		
DRAWING STATUS:	RECORD	DWG# F21295878-007-01	PG 1 OF 5 REV C

REV	DESCRIPTION	BY	DATE							
A	ADDED ISO TIE SECTION	JM	05/12/06	–	----	--	--/--/--	–	----	--	--/--/--

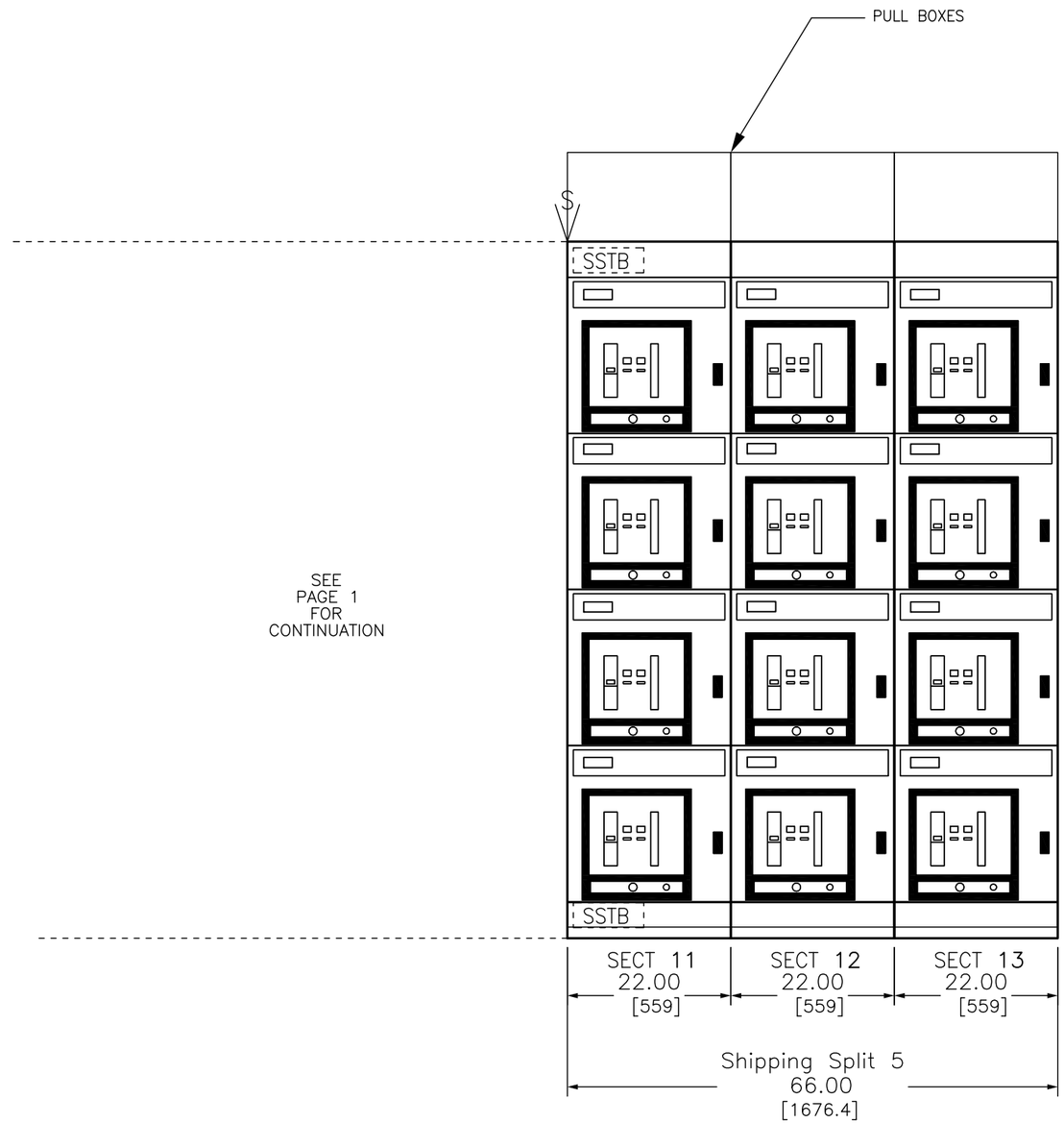

DUAL DIMENSIONS: INCHES
MILLIMETERS

FRONT ELEVATION

JOB NAME:	BUILDING #22 RENOVATIONS	EQUIPMENT DESIGNATION:	SEC SWG A & B NEMA 1
JOB LOCATION:	ALBANY, NY	EQUIPMENT TYPE:	PZ4 SWITCHGEAR
DRAWN BY:	J. BROWN	DRAWING TYPE:	ELEVATION
ENGR:	JJ		SQUARE D Schneider Electric
DATE:	DECEMBER 04, 2006		
DRAWING STATUS:	RECORD	DWG# F21295878-007-01	PG 2 OF 5 REV A

REV	DESCRIPTION	BY	DATE								
B	REMOVED CORNER SECTIONS	TT	06/7/06	–	----	--	--/--/--
A	ADDED ISO TIE SECTION	JM	05/12/06	–	----	--	--/--/--	–	----	--	--/--/--

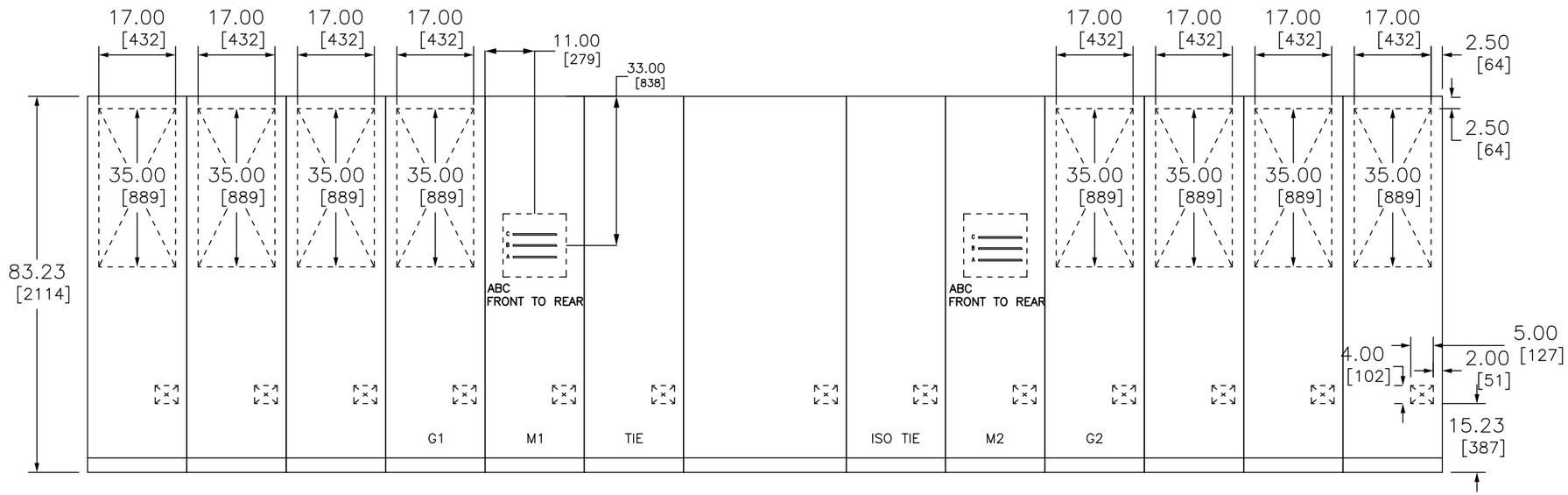

TOP VIEW

TOP VIEW & FLOOR PLAN

JOB NAME:	BUILDING #22 RENOVATIONS	EQUIPMENT DESIGNATION:	SEC SWG A & B NEMA 1
JOB LOCATION:	ALBANY, NY	EQUIPMENT TYPE:	PZ4 SWITCHGEAR
DRAWN BY:	J. BROWN	DRAWING TYPE:	TOP VIEW/FLOOR PLAN
ENGR:	JJ		SQUARE D Schneider Electric
DATE:	DECEMBER 04, 2006		
DRAWING STATUS:	RECORD	DWG# F21295878-007-01	PG 3 OF 5 REV B

REV	DESCRIPTION	BY	DATE								
				B	REMOVED CORNER SECTIONS	TT	06/7/06	-	----	--	--/--/--
A	ADDED ISO TIE SECTION	JM	05/12/06	-	----	--	--/--/--	-	----	--	--/--/--

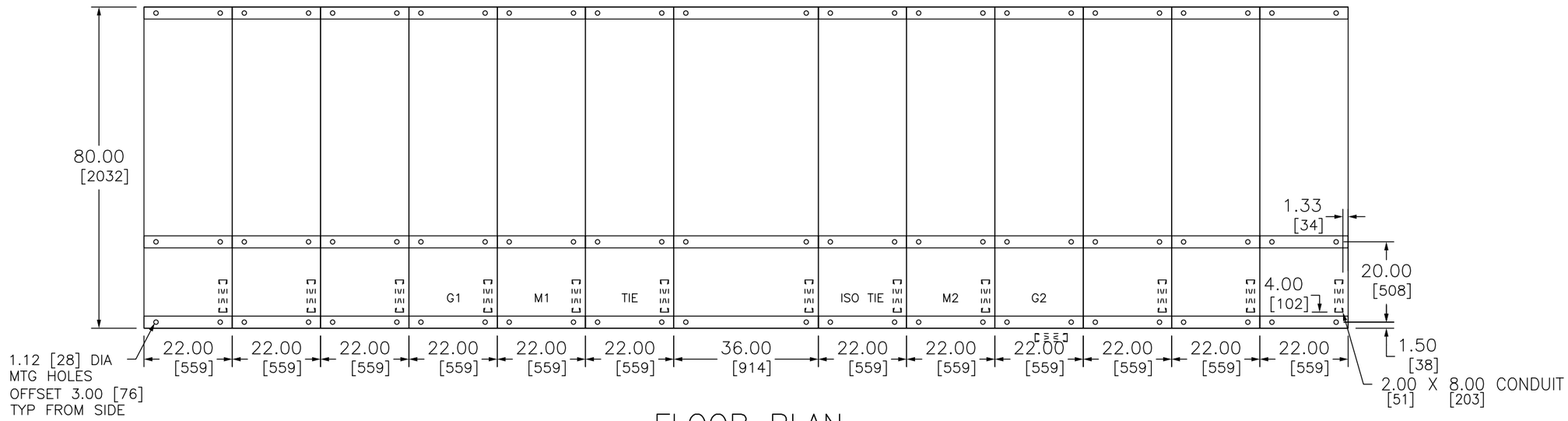

FLOOR PLAN

TOP VIEW & FLOOR PLAN

JOB NAME:	BUILDING #22 RENOVATIONS	EQUIPMENT DESIGNATION:	SEC SWG A & B NEMA 1
JOB LOCATION:	ALBANY, NY	EQUIPMENT TYPE:	PZ4 SWITCHGEAR
DRAWN BY:	J. BROWN	DRAWING TYPE:	TOP VIEW/FLOOR PLAN
ENGR:	JJ		SQUARE D Schneider Electric
DATE:	DECEMBER 04, 2006		
DRAWING STATUS:	RECORD	DWG# F21295878-007-01	PG 4 OF 5 REV B

REV	DESCRIPTION	BY	DATE								
B	REVISED SHIPPING SPLIT WEIGHTS	TT	06/7/06	–	----	--	--/--/--
A	UPDATED DRWG	JM	05/12/06	–	----	--	--/--/--	–	----	--	--/--/--

GENERAL NOTES

Product Description & Rating

Power System Data

480V 3ph–3W, 60 Hz.
Solidly Grounded Neutral at the Source
Neutral 3W Equip,Neut Grnded at Source
Maximum Available Fault Current (RMS): 65kA
Incoming Section 5 Flanged End
Incoming Section 8 Flanged End

Bus System Data

3200A Copper Bus, Silver Flash, Thermal Rated

Enclosure Data

Enclosure Type: Indoor NEMA 1
Exterior Paint Color: ANSI 49
Cable Support Brackets
Rear Doors, Padlock Provision, Tool Operated Latches
24" Pullbox, Every Section
Interbay Barriers, Bus Compartment
Rear Barriers Between Bus/Cable Compartment
Plastic Mimic Bus-- Black on Grey

Estimated Shipping Weight

Shipping Split 1 5520.0 LBS / 2507.0 KGS
Shipping Split 2 3020.0 LBS / 1372.0 KGS
Shipping Split 3 3210.0 LBS / 1458.0 KGS
Shipping Split 4 4530.0 LBS / 2057.0 KGS
Shipping Split 5 5520.0 LBS / 2507.0 KGS

Code Standards

Equipment built to ANSI/UL1558 Code Standards

Product Information

Wiring

Ring Tongue terminations provided on control wires where applicable
Wires shall be labeled with destination marking (point–to–point)
NOTE: When connecting cables, use 90 degree Celsius insulated conductors based on the ampacity of 75 degree Celsius conductors unless otherwise indicated by supplemental instructions.

Instruction Bulletins

Refer to 80298–002–05 Instruction Bulletin for PZ4 installation

Product Accessories

Automatic Transfer System
TRE Level 0 Equipment– Network Provisions Only
Section 5 240kA TVSS with Surge Counter
Section 8 240kA TVSS with Surge Counter
24VDC Power Supply for Breaker Trip and/or Communications
Breaker Transport Truck (Crane)
Hand Held Breaker Test Kit
Extra Breaker Grease
Spare Fuses (3 Sets)
Spare Paint (1 can)
Spare Trip Units
Spare Pilot Lights & Lenses
Certified Test Report
LED Bulbs – Cluster Type

SYMBOL LEGEND

SA	SURGE ARRESTOR
M	POWER METER OR CIRCUIT MONITOR
TVSS	SURGE CAPACITOR
	NEUTRAL CONNECTION WITH CT
	NEUTRAL CONNECTION WITHOUT CT
	NEUTRAL DISCONNECT LINK
	CIRCUIT BREAKER
	PREPARED CELL

GENERAL NOTES

JOB NAME:	BUILDING #22 RENOVATIONS	EQUIPMENT DESIGNATION:	SEC SWG A & B NEMA 1
JOB LOCATION:	ALBANY, NY	EQUIPMENT TYPE:	PZ4 SWITCHGEAR
DRAWN BY:	J. BROWN	DRAWING TYPE:	GENERAL NOTES
ENGR:	JJ		SQUARE D Schneider Electric
DATE:	DECEMBER 04, 2006		
DRAWING STATUS:	RECORD	DWG# F21295878–007–01	PG 5 OF 5 REV B

REV	DESCRIPTION	BY	DATE								
A	ADDED ISO TIE SECTION	JM	05/12/06	B	ADDED PROTECTIVE RELAYS TO ONELINE	TT	06/7/06	-	----	--	--/--/--
				C	REMOVE EXTRA GROUND LUG EXTENSIONS	TT	02/07/07	-	----	--	--/--/--

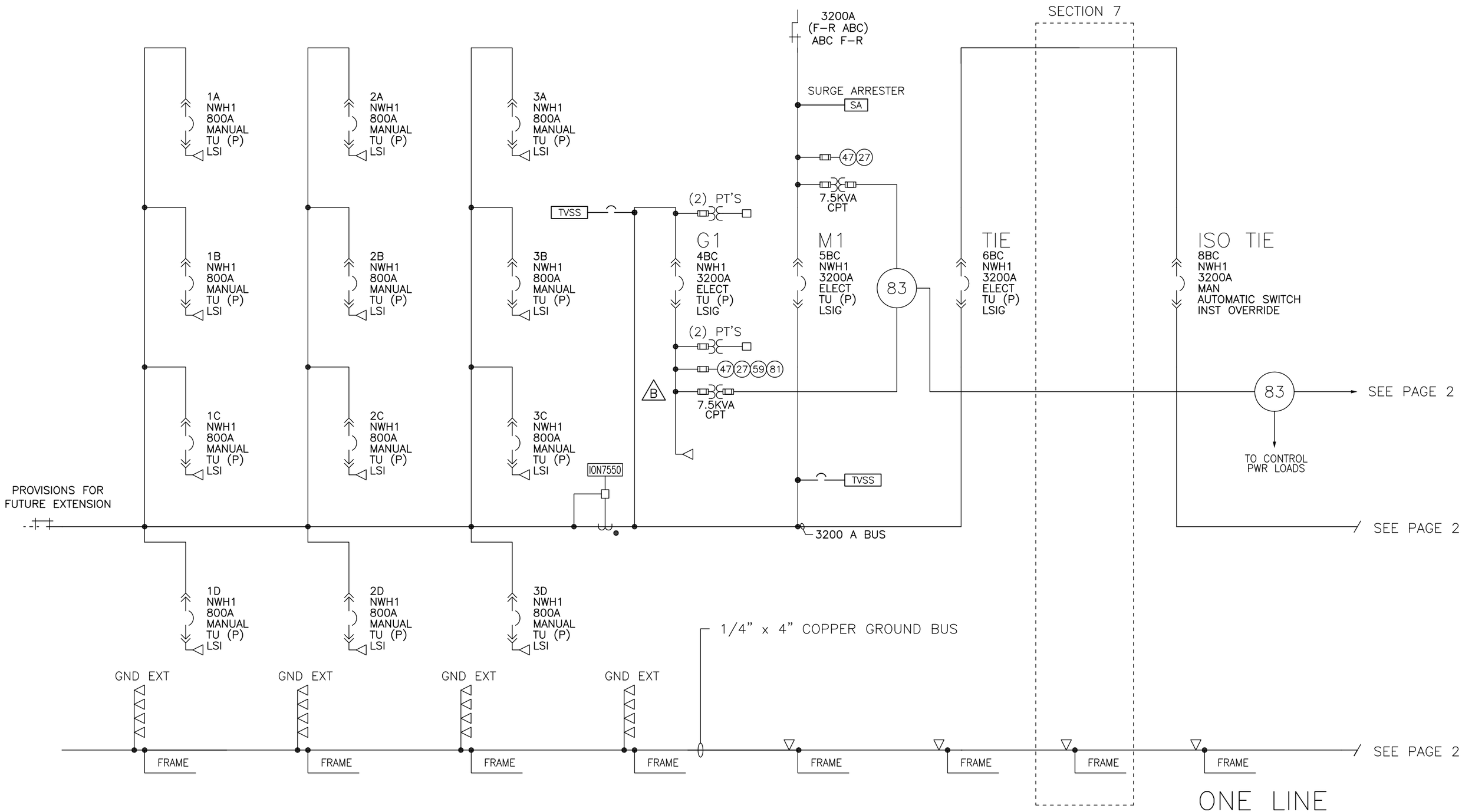

JOB NAME:	BUILDING #22 RENOVATIONS	EQUIPMENT DESIGNATION:	SEC SWG A & B NEMA 1
JOB LOCATION:	ALBANY, NY	EQUIPMENT TYPE:	PZ4 SWITCHGEAR
DRAWN BY:	J. BROWN	DRAWING TYPE:	ONE LINE
ENGR:	JJ		SQUARE D Schneider Electric
DATE:	DECEMBER 04, 2006		
DRAWING STATUS:	RECORD	DWG# 021295878-007-01	PG 1 OF 4 REV C

REV	DESCRIPTION	BY	DATE								
A	ADDED ISO TIE SECTION	JM	05/12/06	B	ADDED PROTECTIVE RELAYS TO ONELINE	TT	06/7/06	-	----	--	--/--/--
				C	REMOVE EXTRA GROUND LUG EXTENSIONS	TT	02/07/07	-	----	--	--/--/--

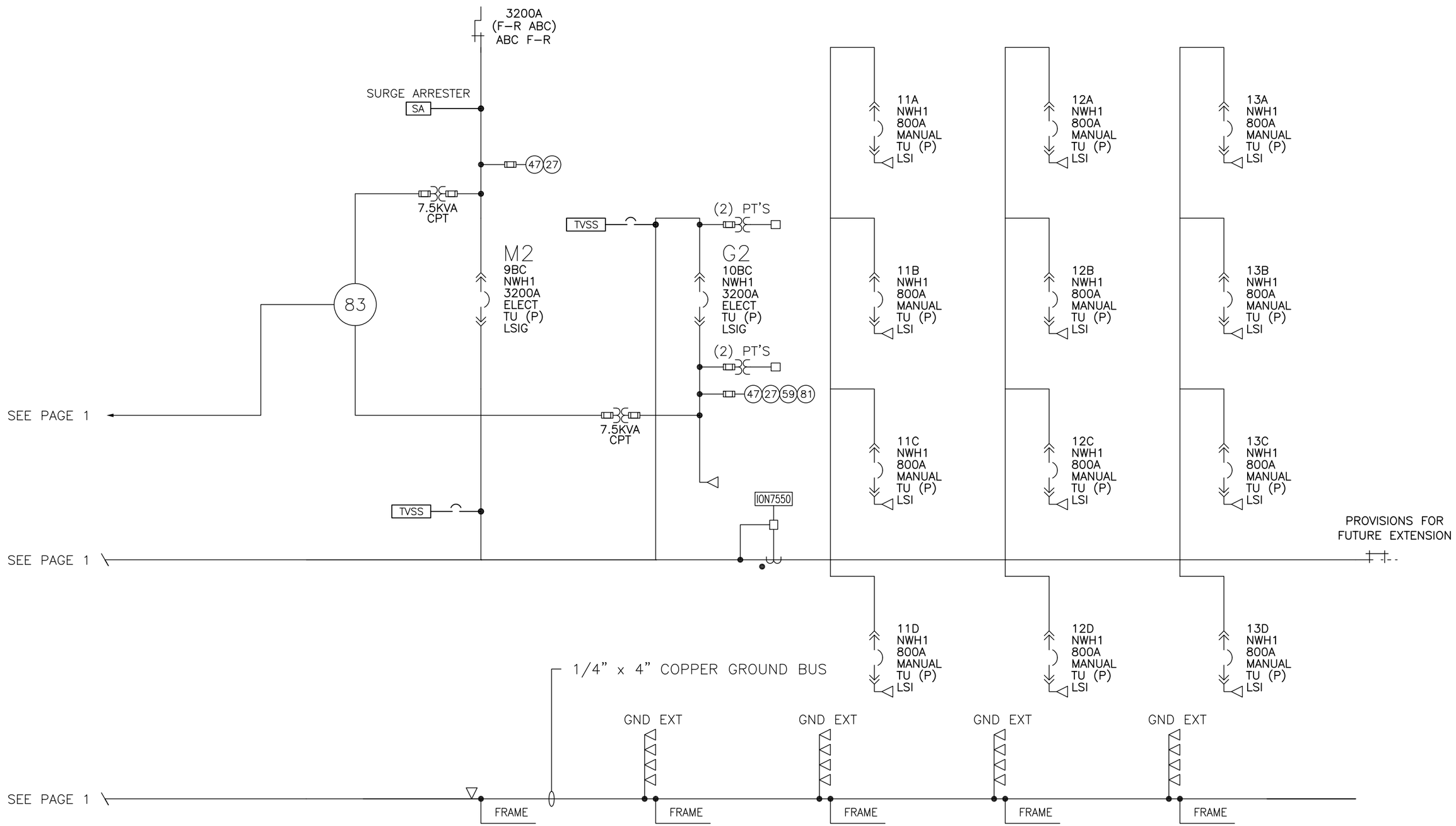

ONE LINE

JOB NAME:	BUILDING #22 RENOVATIONS	EQUIPMENT DESIGNATION:	SEC SWG A & B NEMA 1
JOB LOCATION:	ALBANY, NY	EQUIPMENT TYPE:	PZ4 SWITCHGEAR
DRAWN BY:	J. BROWN	DRAWING TYPE:	ONE LINE
ENGR:	JJ		SQUARE D Schneider Electric
DATE:	DECEMBER 04, 2006		
DRAWING STATUS:	RECORD	DWG# 021295878-007-01	PG 2 OF 4 REV C

REV	DESCRIPTION	BY	DATE								
A	UPDATED DRWG	JM	05/12/06	B	ADDED GROUND LUGS	TT	06/7/06	–	----	--	--/--/--
				C	UPDATED LUGS	JJ	02/19/07	–	----	--	--/--/--

POWER–ZONE 4 SWITCHGEAR – MASTERPACT CIRCUIT BREAKER TABLE

CELL NO	BREAKER DESIGNATION 1	BKR TYPE	BKR OPER.	BREAKER TRIP UNIT	FRAME SIZE	SENSOR PLUG	TRIP SETTING	RATING PLUG	BKR AIC	TRIP PARAM	2 LUGS PER PHASE: COMPRESSION,NEMA 2–HOLE						BREAKER AND CRADLE ACCESSORIES (NON STANDARD)
											QTY	A,B,C ϕ SIZE	QTY	NEUT SIZE	QTY	GND SIZE	
1A	FLY WHEEL UPS MPB	NWH1	MANUAL	POWER MTR	800A	250A	125A	A	65KA	LSI	3	1/0	--	--	1	#6 – #2	CE3,CT1,CD3,COM,M2C,MX1,CDM,PL
1B	SEMO UPS MPB	NWH1	MANUAL	POWER MTR	800A	250A	150A	A	65KA	LSI	3	2/0	--	--	1	#6 – #2	CE3,CT1,CD3,COM,M2C,MX1,CDM,PL
1C	SEMO UPS XFORMER	NWH1	MANUAL	POWER MTR	800A	250A	175A	A	65KA	LSI	3	2/0	--	--	--	--	CE3,CT1,CD3,COM,M2C,MX1,CDM,PL
1D	RP–UL – A XFORMER	NWH1	MANUAL	POWER MTR	800A	250A	175A	A	65KA	LSI	3	2/0	--	--	1	#6 – #2	CE3,CT1,CD3,COM,M2C,MX1,CDM,PL
2A	LP–UL – A XFORMER	NWH1	MANUAL	POWER MTR	800A	250A	125A	A	65KA	LSI	3	#1	--	--	1	#6 – #2	CE3,CT1,CD3,COM,M2C,MX1,CDM,PL
2B	RP–LL – A XFORMER	NWH1	MANUAL	POWER MTR	800A	250A	175A	A	65KA	LSI	3	2/0	--	--	1	#6 – #2	CE3,CT1,CD3,COM,M2C,MX1,CDM,PL
2C	LP–LL – A XFORMER	NWH1	MANUAL	POWER MTR	800A	250A	125A	A	65KA	LSI	3	1/0	--	--	1	#6 – #2	CE3,CT1,CD3,COM,M2C,MX1,CDM,PL
2D	MCC–A	NWH1	MANUAL	POWER MTR	800A	800A	800A	A	65KA	LSI	3	4/0 – 500MCM	--	--	1	#1 – 2/0	CE3,CT1,CD3,COM,M2C,MX1,CDM,PL
3A	CHILLER–1	NWH1	MANUAL	POWER MTR	800A	400A	400A	A	65KA	LSI	3	4/0 – 500MCM	--	--	1	#6 – #2	CE3,CT1,CD3,COM,M2C,MX1,CDM,PL
3B	CPL XFORMER	NWH1	MANUAL	POWER MTR	800A	250A	110A	B	65KA	LSI	3	1/0	--	--	1	#6 – #2	CE3,CT1,CD3,COM,M2C,MX1,CDM,PL
3C	LP–GEN–A XFORMER	NWH1	MANUAL	POWER MTR	800A	250A	100A	A	65KA	LSI	3	2/0	--	--	1	#6 – #2	CE3,CT1,CD3,COM,M2C,MX1,CDM,PL
3D	EXISTING UL–5	NWH1	MANUAL	POWER MTR	800A	250A	125A	A	65KA	LSI	3	#1	--	--	1	#6 – #2	CE3,CT1,CD3,COM,M2C,MX1,CDM,PL
4BC	GEN 1	NWH1	ELECT	POWER MTR	3200A	3200A	3200A	A	65KA	LSIG	10	4/0 – 500MCM	--	--	1	4/0 – 500MCM	CE3,CT1,CD3,COM,M6C,SDE2,MX2,MX1,XF,MCH,PF,OF8,PBL,CDM,PL
5BC	MAIN 1	NWH1	ELECT	POWER MTR	3200A	3200A	3200A	A	65KA	LSIG	--	--	--	--	1	4/0 – 500MCM	CE3,CT1,CD3,COM,M6C,SDE2,MX1,XF,MCH,PF,OF8,MCT,PBL,CDM,PL
6BC	TIE	NWH1	ELECT	POWER MTR	3200A	3200A	3200A	A	65KA	LSIG	--	--	--	--	--	--	CE3,CT1,CD3,COM,M6C,SDE2,MX1,XF,MCH,PF,OF8,PBL,CDM,PL
8BC	ISO TIE	NWH2	MANUAL	AUTOMATIC SWITCH	3200A	--	--	--	65KA	INST	--	--	--	--	--	--	CE3,CT1,CD3,COM,M2C,MX1,CDM,PL
9BC	MAIN 2	NWH1	ELECT	POWER MTR	3200A	3200A	3200A	A	65KA	LSIG	--	--	--	--	1	4/0 – 500MCM	CE3,CT1,CD3,COM,M6C,SDE2,MX1,XF,MCH,PF,OF8,MCT,PBL,CDM,PL
10BC	GEN 2	NWH1	ELECT	POWER MTR	3200A	3200A	3200A	A	65KA	LSIG	10	4/0 – 500MCM	--	--	1	4/0 – 500MCM	CE3,CT1,CD3,COM,M6C,SDE2,MX2,MX1,XF,MCH,PF,OF8,PBL,CDM,PL
11A	SEMO UPS MPB	NWH1	MANUAL	POWER MTR	800A	250A	150A	A	65KA	LSI	3	2/0	--	--	1	#6 – #2	CE3,CT1,CD3,COM,M2C,MX1,CDM,PL
11B	MCC–B	NWH1	MANUAL	POWER MTR	800A	800A	800A	A	65KA	LSI	3	4/0 – 500MCM	--	--	1	#1 – 2/0	CE3,CT1,CD3,COM,M2C,MX1,CDM,PL
11C	FLY WHEEL UPS XFORMER	NWH1	MANUAL	POWER MTR	800A	250A	150A	A	65KA	LSI	3	2/0	--	--	1	#6 – #2	CE3,CT1,CD3,COM,M2C,MX1,CDM,PL
11D	FLY WHEEL UPS	NWH1	MANUAL	POWER MTR	800A	250A	125A	A	65KA	LSI	3	1/0	--	--	--	--	CE3,CT1,CD3,COM,M2C,MX1,CDM,PL
12A	LP–LL – B XFORMER	NWH1	MANUAL	POWER MTR	800A	250A	125A	A	65KA	LSI	3	1/0	--	--	1	#6 – #2	CE3,CT1,CD3,COM,M2C,MX1,CDM,PL
12B	RP–UL – B XFORMER	NWH1	MANUAL	POWER MTR	800A	250A	175A	A	65KA	LSI	3	2/0	--	--	1	#6 – #2	CE3,CT1,CD3,COM,M2C,MX1,CDM,PL
12C	LP–UL – B XFORMER	NWH1	MANUAL	POWER MTR	800A	250A	125A	A	65KA	LSI	3	1/0	--	--	1	#6 – #2	CE3,CT1,CD3,COM,M2C,MX1,CDM,PL
12D	RP–UL – B XFORMER	NWH1	MANUAL	POWER MTR	800A	250A	175A	A	65KA	LSI	3	2/0	--	--	1	#6 – #2	CE3,CT1,CD3,COM,M2C,MX1,CDM,PL
13A	CHILLER–2	NWH1	MANUAL	POWER MTR	800A	400A	400A	A	65KA	LSI	3	4/0 – 500MCM	--	--	1	#6 – #2	CE3,CT1,CD3,COM,M2C,MX1,CDM,PL
13B	LP–GEN	NWH1	MANUAL	POWER MTR	800A	250A	100A	A	65KA	LSI	3	#2	--	--	1	#6 – #2	CE3,CT1,CD3,COM,M2C,MX1,CDM,PL
13C	SPARE	NWH1	MANUAL	POWER MTR	800A	250A	250A	A	65KA	LSI	3	4/0 – 500MCM	--	--	--	--	CE3,CT1,CD3,COM,M2C,MX1,CDM,PL
13D	EXISTING CAP NET	NWH1	MANUAL	POWER MTR	800A	400A	400A	A	65KA	LSI	3	4/0 – 500MCM	--	--	1	#6 – #2	CE3,CT1,CD3,COM,M2C,MX1,CDM,PL

JOB NAME:	BUILDING #22 RENOVATIONS	EQUIPMENT DESIGNATION:	SEC SWG A & B NEMA 1
JOB LOCATION:	ALBANY, NY	EQUIPMENT TYPE:	PZ4 SWITCHGEAR
DRAWN BY:	J. BROWN	DRAWING TYPE:	DEVICE TABLE
ENGR:	JJ		SQUARE D Schneider Electric
DATE:	DECEMBER 04, 2006		
DRAWING STATUS:	RECORD	DWG# 021295878–007–01	PG 3 OF 4 REV C

REV	DESCRIPTION	BY	DATE	–	----	--	--/--/--	–	----	--	--/--/--
–	----	--	--/--/--	–	----	--	--/--/--	–	----	--	--/--/--

LEGEND (ACCESSORIES)

	STANDARD ACCESSORIES
OF4	AUX CONTACTS (STD)
UC1	ZSI SECONDARIES (STD)
UC2	MODIFIED DIFFERENTIAL GROUND FAULT (STD)
UC3	24VDC POWER SUPPLY (STD)
SDE1	ELECTRICAL FAULT ALARM CONTACT (STD)
CPL	CRADLE PADLOCK ATTACHMENT
	NON-STANDARD ACCESSORIES
CE(X)	CONNECTED CELL SWITCHES (X=QTY)
CT(X)	TEST CELL SWITCHES (X=NUMBER OF)
CD(X)	DISCONNECTED CELL SWITCHES (X=QTY)
COM	COMMUNICATION
M2C	2 PROGRAMMABLE CONTACT MODULE
M6C	6 PROGRAMMABLE CONTACT MODULE
SDE2	ADDITIONAL ELECTRICAL FAULT ALARM CONTACT
RES	ELECTRICAL RESET
MN	UNDERVOLTAGE TRIP
MX2	SHUNT TRIP

MX1	SHUNT TRIP
XF	SHUNT CLOSE
MCH	SPRING CHARGING MOTOR
MX1C	SHUNT TRIP WITH COMM'S
XFC	SHUNT CLOSE WITH COMM'S
PF	READY TO CLOSE CONTACT
OF(X)	AUX CONTACTS (X=QTY)
EF(X)	CONNECTED AND CLOSED SWITCHES (X=QTY)
SH	SHUTTERS
MCT	METERING CT
PBL	PUSH BUTTON INTERLOCK COVER
AR	AUTOMATIC RESET
CDM	OPERATIONS COUNTER
PL	PADLOCK ATTACHMENT(REQD FOR KEYLOCK)
K	KEY INTERLOCK
CK	CRADLE KEY INTERLOCK
--	---
--	---

NOTES

1. ENGRAVED NAMEPLATES SHALL BE WHITE BACKGROUND WITH BLACK LETTERS.
2. COMPRESSION LUG QUANTITIES ARE BASED ON COPPER CABLES.

JOB NAME:	BUILDING #22 RENOVATIONS	EQUIPMENT DESIGNATION:	SEC SWG A & B NEMA 1
JOB LOCATION:	ALBANY, NY	EQUIPMENT TYPE:	PZ4 SWITCHGEAR
DRAWN BY:	J. BROWN	DRAWING TYPE:	DEVICE TABLE
ENGR:	JJ		SQUARE D Schneider Electric
DATE:	DECEMBER 04, 2006		
DRAWING STATUS:	RECORD	DWG# 021295878-007-01	PG 4 OF 4 REV –

REV	DESCRIPTION	BY	DATE	–	----	--	--/--/--	–	----	--	--/--/--
A	UPDATED DRWG	JM	05/16/06	–	----	--	--/--/--	–	----	--	--/--/--

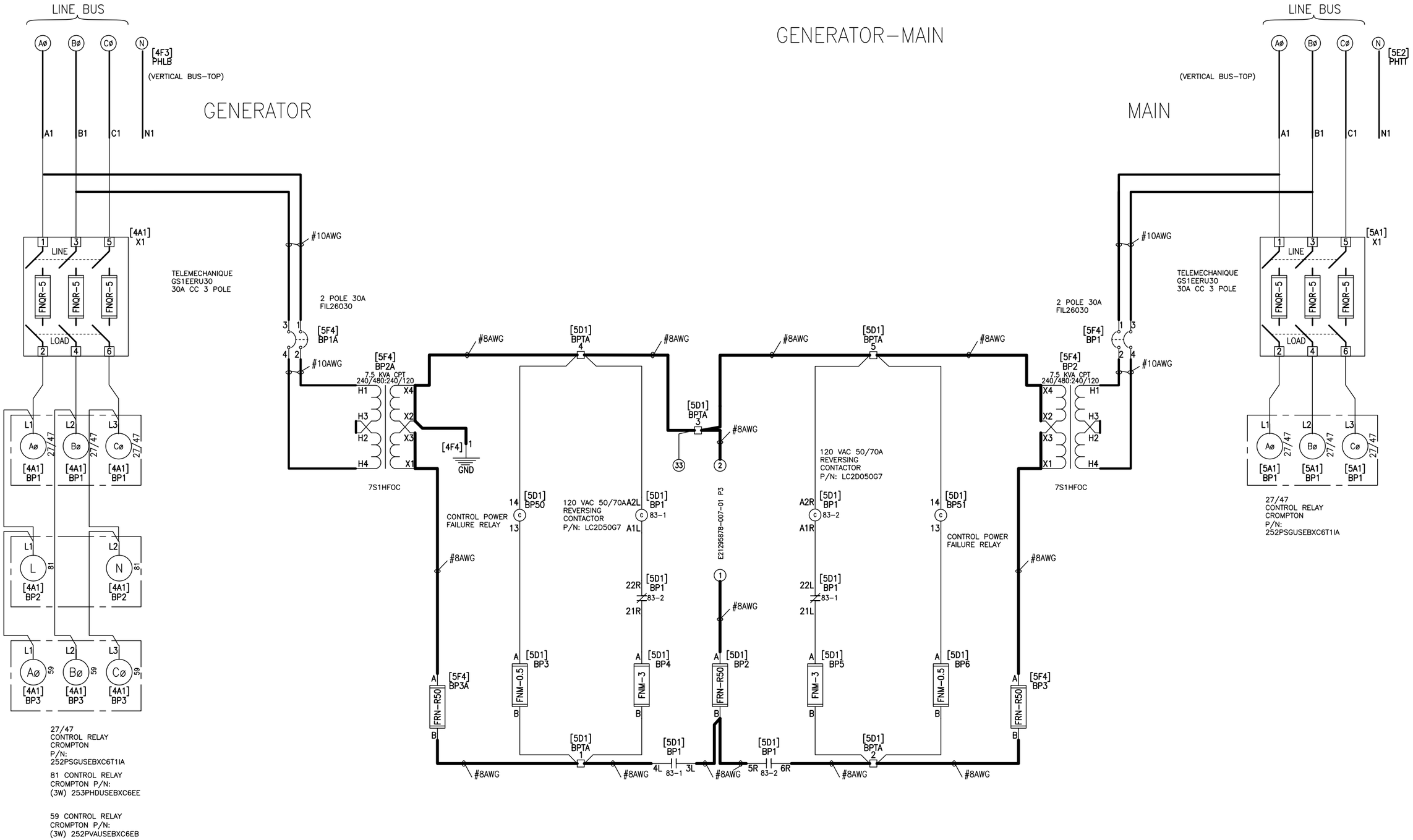

PLC CONTROL

NOTES:
1. DO NOT GROUND GREEN WIRE IN THE CORDS. CUT GREEN WIRE BACK TO THE INSULATION. CABLES FROM UPS ARE 3/C #14 POWER.

JOB NAME:	BUILDING #22 RENOVATIONS	EQUIPMENT DESIGNATION:	SEC SWG A & B NEMA 1
JOB LOCATION:	ALBANY, NY	EQUIPMENT TYPE:	PZ4 SWITCHGEAR
DRAWN BY:	T.THOMPSON	DRAWING TYPE:	ELEMENTARY DIAGRAM
ENGR:	JJ		SQUARE D Schneider Electric
DATE:	DECEMBER 04, 2006		
DRAWING STATUS:	RECORD	DWG# E21295878–007–01	PG 1 OF 14 REV A

REV	DESCRIPTION	BY	DATE	–	----	--	--/--/--	–	----	--	--/--/--
A	UPDATED DRWG	JM	05/16/06	–	----	--	--/--/--	–	----	--	--/--/--

MAIN–GENERATOR

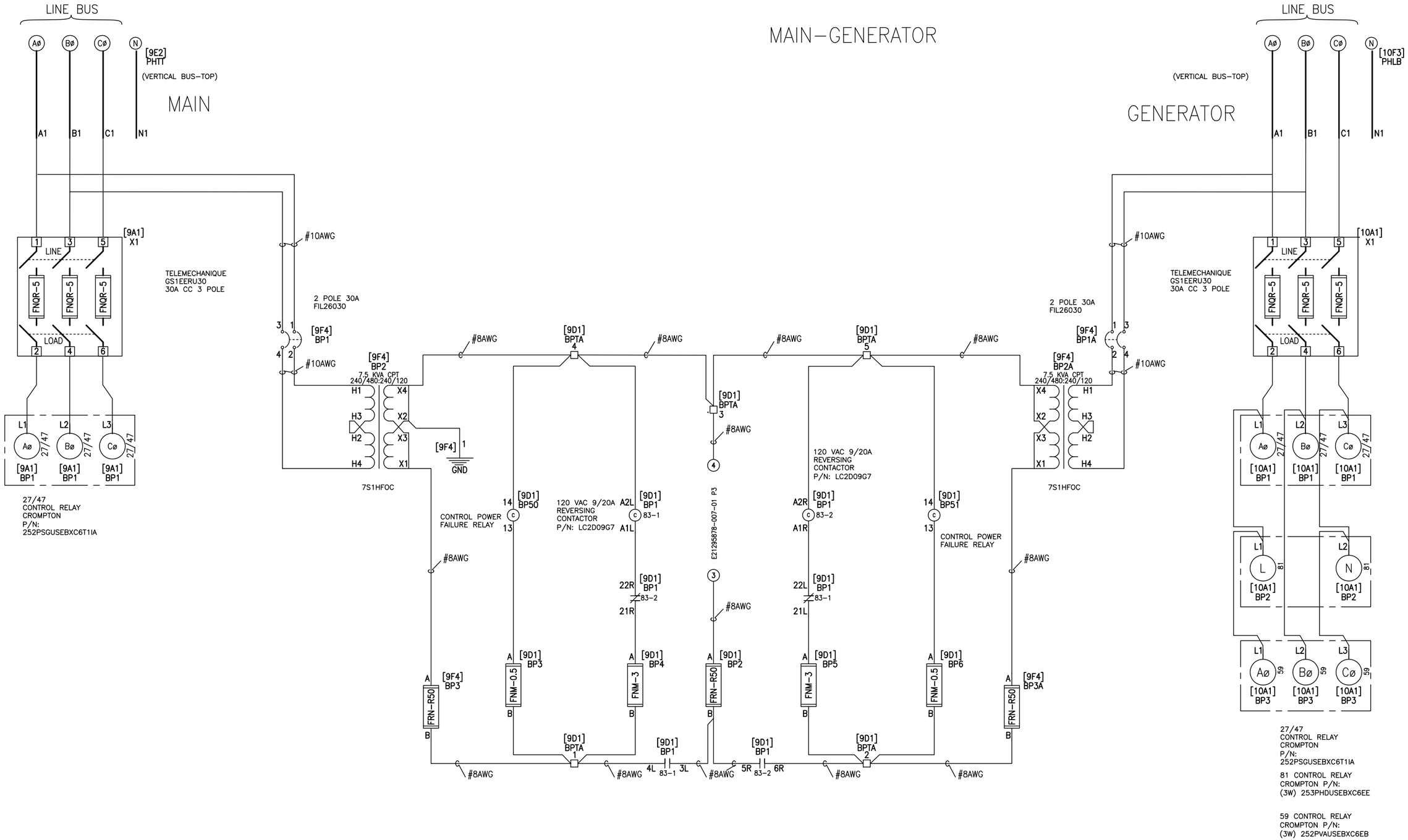

PLC CONTROL

NOTES:
1. DO NOT GROUND GREEN WIRE IN THE CORDS. CUT GREEN WIRE BACK TO THE INSULATION. CABLES FROM UPS ARE 3/C #14 POWER.

JOB NAME:	BUILDING #22 RENOVATIONS	EQUIPMENT DESIGNATION:	SEC SWG A & B NEMA 1
JOB LOCATION:	ALBANY, NY	EQUIPMENT TYPE:	PZ4 SWITCHGEAR
DRAWN BY:	T.THOMPSON	DRAWING TYPE:	ELEMENTARY DIAGRAM
ENGR:	JJ		SQUARE D Schneider Electric
DATE:	DECEMBER 04, 2006		
DRAWING STATUS:	RECORD	DWG# E21295878–007–01	PG 2 OF 14 REV A

REV	DESCRIPTION	BY	DATE								
A	UPDATED DRWG	JM	05/16/06	B	ADD BPTB3	JJ	02/01/07	–	----	--	--/--/--
				C	CHANGE TO SST2 FOR #8	JJ	02/05/07	–	----	--	--/--/--

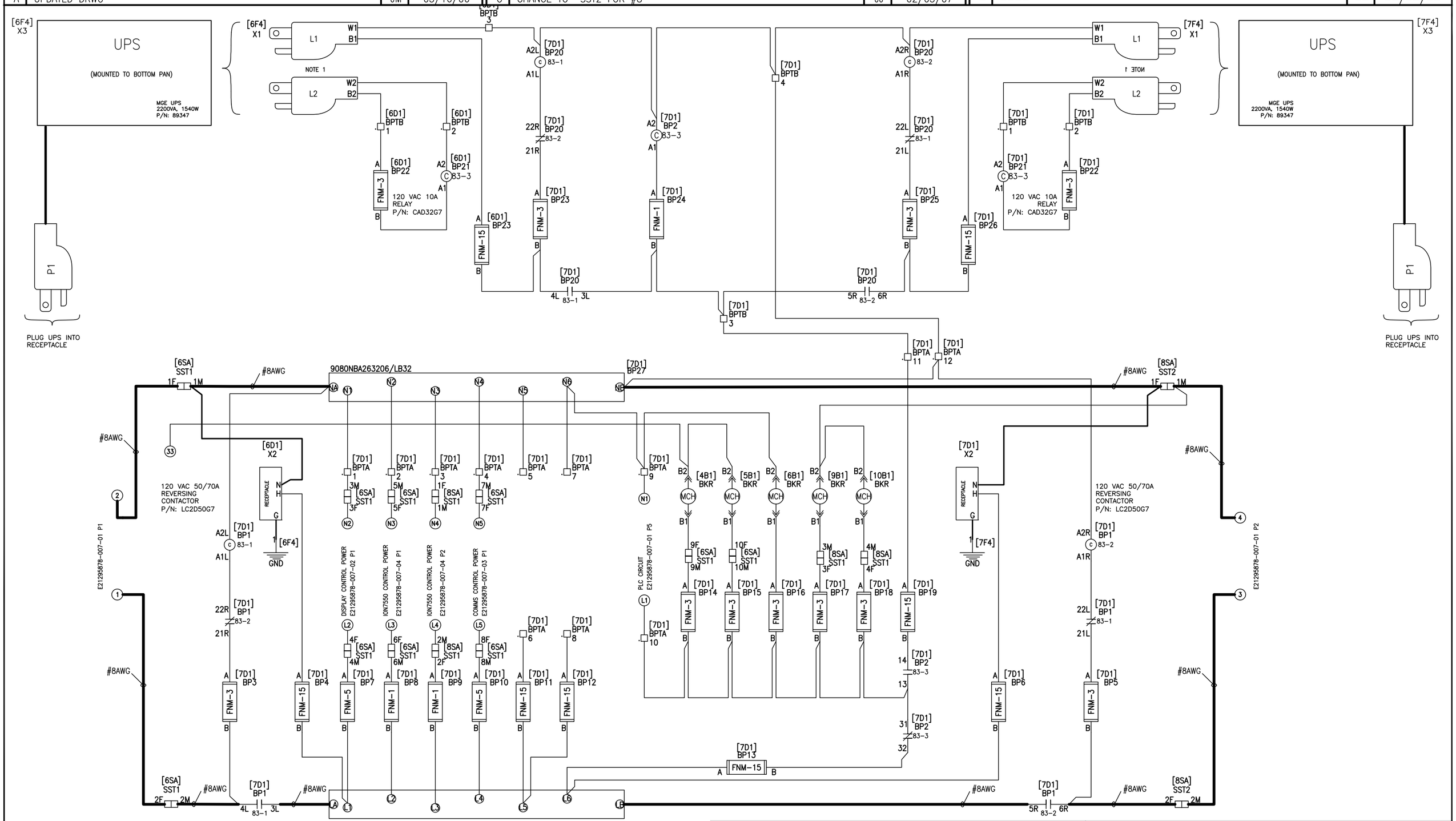

NOTES:
1. DO NOT GROUND GREEN WIRE IN THE CORDS. CUT GREEN WIRE BACK TO THE INSULATION. CABLES FROM UPS ARE 3/C #14 POWER.

JOB NAME:	BUILDING #22 RENOVATIONS	EQUIPMENT DESIGNATION:	SEC SWG A & B NEMA 1
JOB LOCATION:	ALBANY, NY	EQUIPMENT TYPE:	PZ4 SWITCHGEAR
DRAWN BY:	T.THOMPSON	DRAWING TYPE:	ELEMENTARY DIAGRAM
ENGR:	JJ		SQUARE D Schneider Electric
DATE:	DECEMBER 04, 2006		
DRAWING STATUS:	RECORD	DWG# E21295878-007-01	PG 3 OF 14 REV C

REV	DESCRIPTION	BY	DATE	B	ETHERNET MODULE	JJ	01/17/07	-	----	--	--/--/--
A	UPDATED DRWG	JM	05/16/06	-	----	--	--/--/--	-	----	--	--/--/--

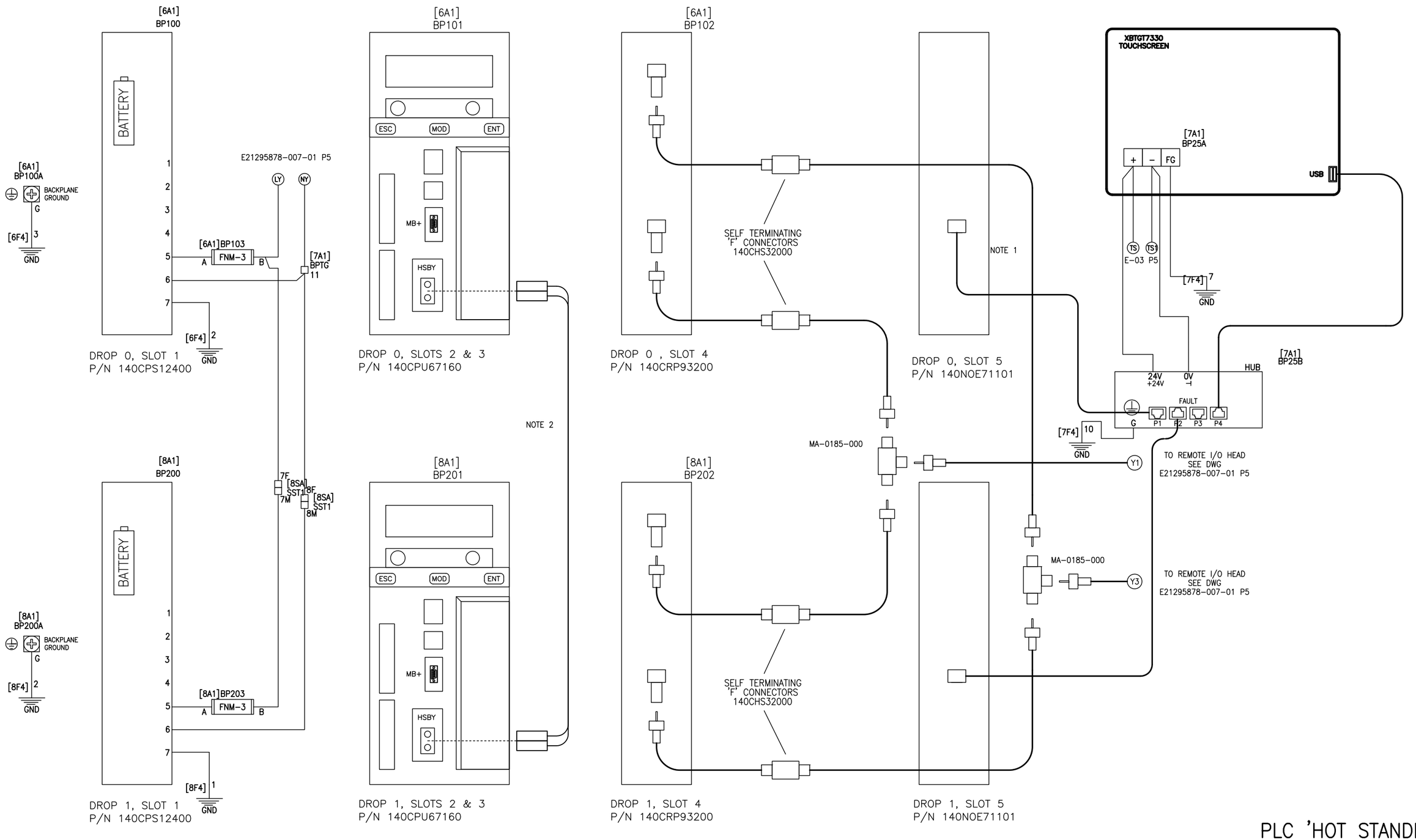

PLC 'HOT STANDBY'

NOTES:

1. COAXIAL CABLES ARE FABRICATED FROM CABLE AS-MBII-003 AND 'F' CONNECTORS.
2. HOT STANDBY CONTROL IS INCORPORATED INTO THE CPU MODULES. THE MODULES MUST BE CONNECTED VIA FIBER OPTIC CABLE 490NOR0003.

JOB NAME:	BUILDING #22 RENOVATIONS	EQUIPMENT DESIGNATION:	SEC SWG A & B NEMA 1
JOB LOCATION:	ALBANY, NY	EQUIPMENT TYPE:	PZ4 SWITCHGEAR
DRAWN BY:	T.THOMPSON	DRAWING TYPE:	ELEMENTARY DIAGRAM
ENGR:	JJ		SQUARE D Schneider Electric
DATE:	DECEMBER 04, 2006		
DRAWING STATUS:	RECORD	DWG# E21295878-007-01	PG 4 OF 14 REV B

REV	DESCRIPTION	BY	DATE	B	REVISED PER MARKUPS	DRF	11/07/2014	-	----	--	--/--/--
A	UPDATED DRWG	JM	05/16/06	-	----	--	--/--/--	-	----	--	--/--/--

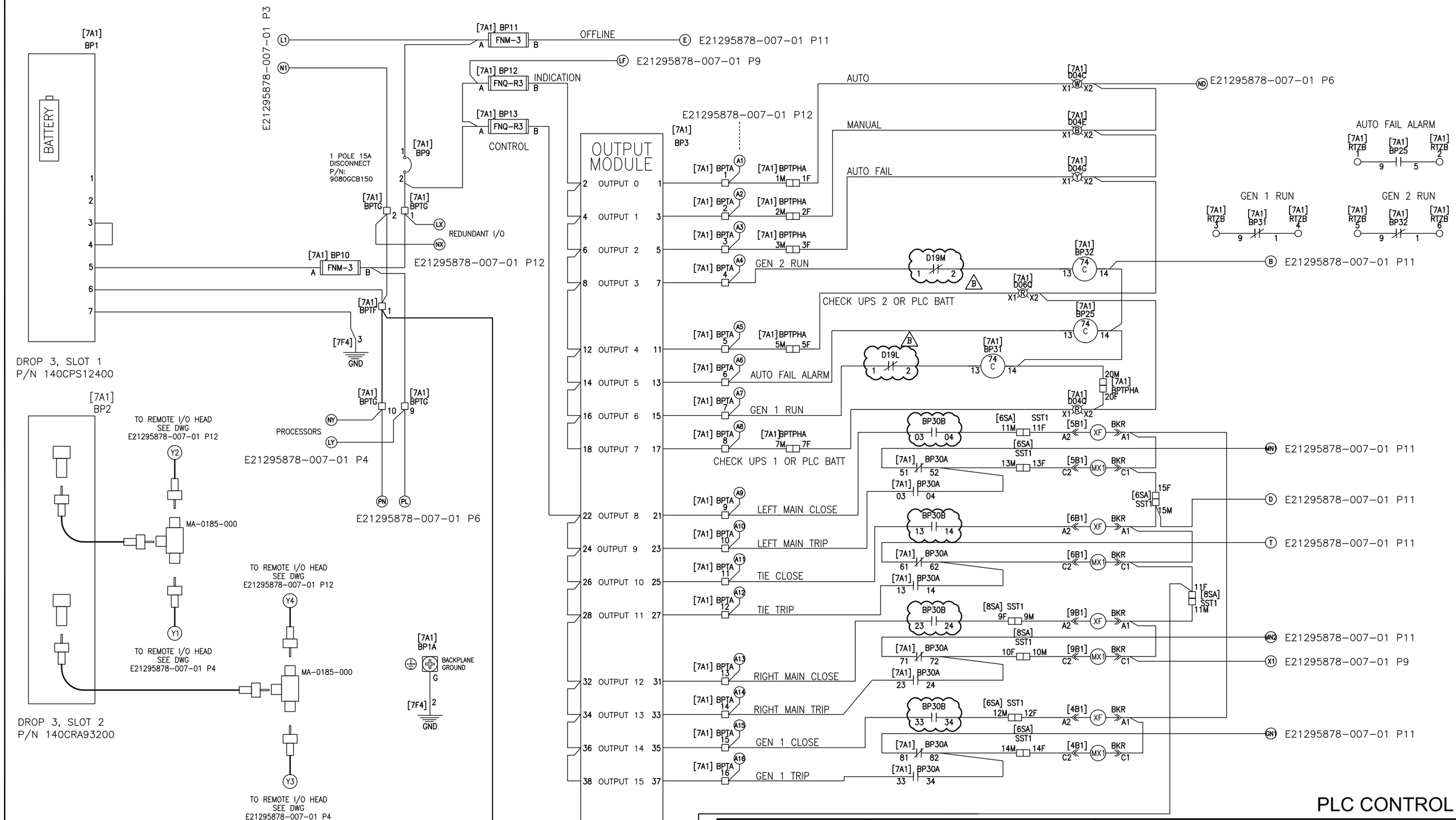

PLC CONTROL

NOTES:

1. PULL APART TERMINAL BLOCKS. TOP OR RIGHT PORTION(MALE WILL BE SCREWED TO THE PAN. BOTTOM OR LEFT PORTION (FEMALE) WILL BE USED ON DOOR HARNESS.
2. BREAKER OPEN AND IN CONNECTED POSITION. ALL RELAYS SHOWN DE-ENERGIZED, UNLATCHED AND RESET.

JOB NAME:	BUILDING #22 RENOVATIONS	EQUIPMENT DESIGNATION:	SEC SWG A & B NEMA 1
JOB LOCATION:	ALBANY, NY	EQUIPMENT TYPE:	PZ4 SWITCHGEAR
DRAWN BY:	T.THOMPSON	DRAWING TYPE:	ELEMENTARY DIAGRAM
ENGR:	JJ		SQUARE D Schneider Electric
DATE:	DECEMBER 04, 2006		
DRAWING STATUS:	RECORD	DWG# E21295878-007-01	PG 5 OF 14 REV B

REV	DESCRIPTION	BY	DATE								
B	REVISED PER MARKUPS	DRF	11/07/2014	–	----	--	--/--/--
A	UPDATED DRWG	JM	05/16/06	–	----	--	--/--/--	–	----	--	--/--/--

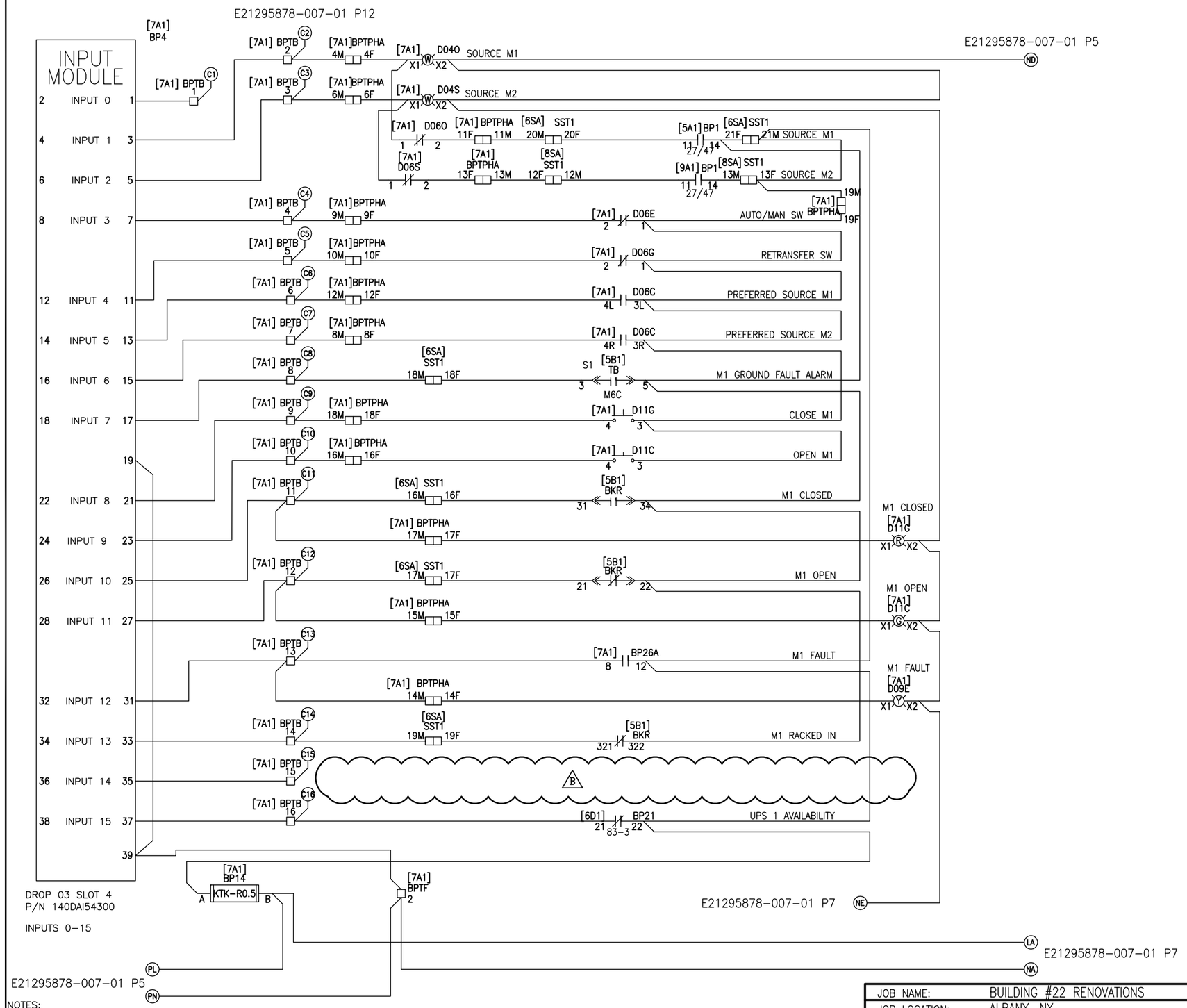

NOTES:

1. PULL APART TERMINAL BLOCKS. TOP OR RIGHT PORTION(MALE WILL BE SCREWED TO THE PAN. BOTTOM OR LEFT PORTION (FEMALE) WILL BE USED ON DOOR HARNESS.
2. BREAKER OPEN AND IN CONNECTED POSITION. ALL RELAYS SHOWN DE-ENERGIZED, UNLATCHED AND RESET.

PLC CONTROLS

JOB NAME:	BUILDING #22 RENOVATIONS	EQUIPMENT DESIGNATION:	SEC SWG A & B NEMA 1
JOB LOCATION:	ALBANY, NY	EQUIPMENT TYPE:	PZ4 SWITCHGEAR
DRAWN BY:	T.THOMPSON	DRAWING TYPE:	ELEMENTARY DIAGRAM
ENGR:	JJ		SQUARE D Schneider Electric
DATE:	DECEMBER 04, 2006		
DRAWING STATUS:	RECORD	DWG# E21295878-007-01	PG 6 OF 14 REV B

REV	DESCRIPTION	BY	DATE									
B	REVISED PER MARKUPS	DRF	11/07/2014	–	----	--	--/--/--
A	UPDATED DRWG	JM	05/16/06	–	----	--	--/--/--	–	----	--	--/--/--

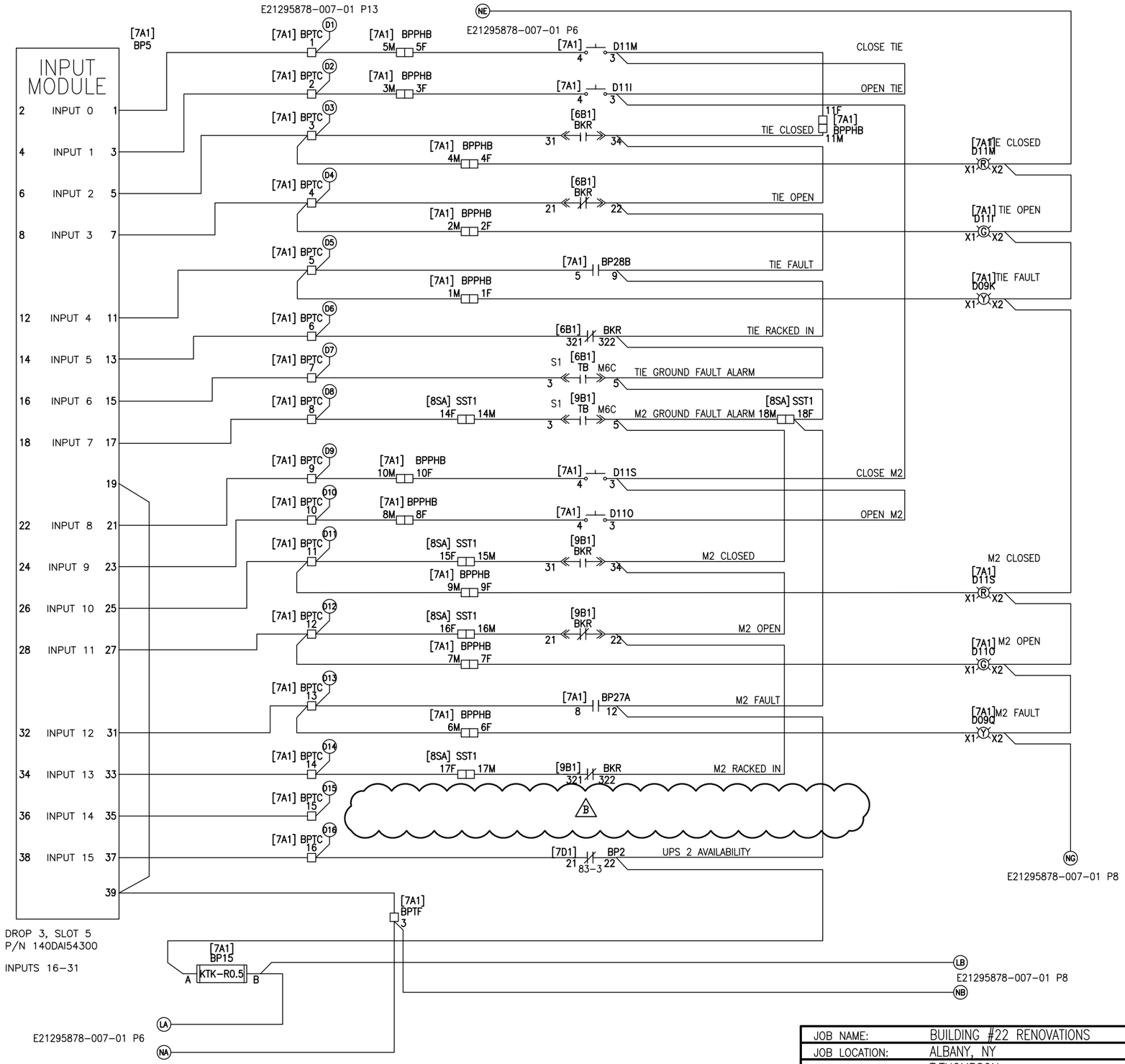

PLC CONTROL

JOB NAME:	BUILDING #22 RENOVATIONS	EQUIPMENT DESIGNATION:	SEC SWG A & B NEMA 1
JOB LOCATION:	ALBANY, NY	EQUIPMENT TYPE:	PZ4 SWITCHGEAR
DRAWN BY:	T.THOMPSON	DRAWING TYPE:	ELEMENTARY DIAGRAM
ENGR:	JJ		SQUARE D Schneider Electric
DATE:	DECEMBER 04, 2006		
DRAWING STATUS:	RECORD	DWG# E21295878-007-01	PG 7 OF 14 REV B

NOTES:

1. BREAKER OPEN AND IN CONNECTED POSITION. ALL RELAYS SHOWN DE-ENERGIZED, UNLATCHED AND RESET.

REV	DESCRIPTION	BY	DATE	–	----	--	--/--/--	–	----	--	--/--/--
A	UPDATED DRWG	JM	05/16/06	–	----	--	--/--/--	–	----	--	--/--/--

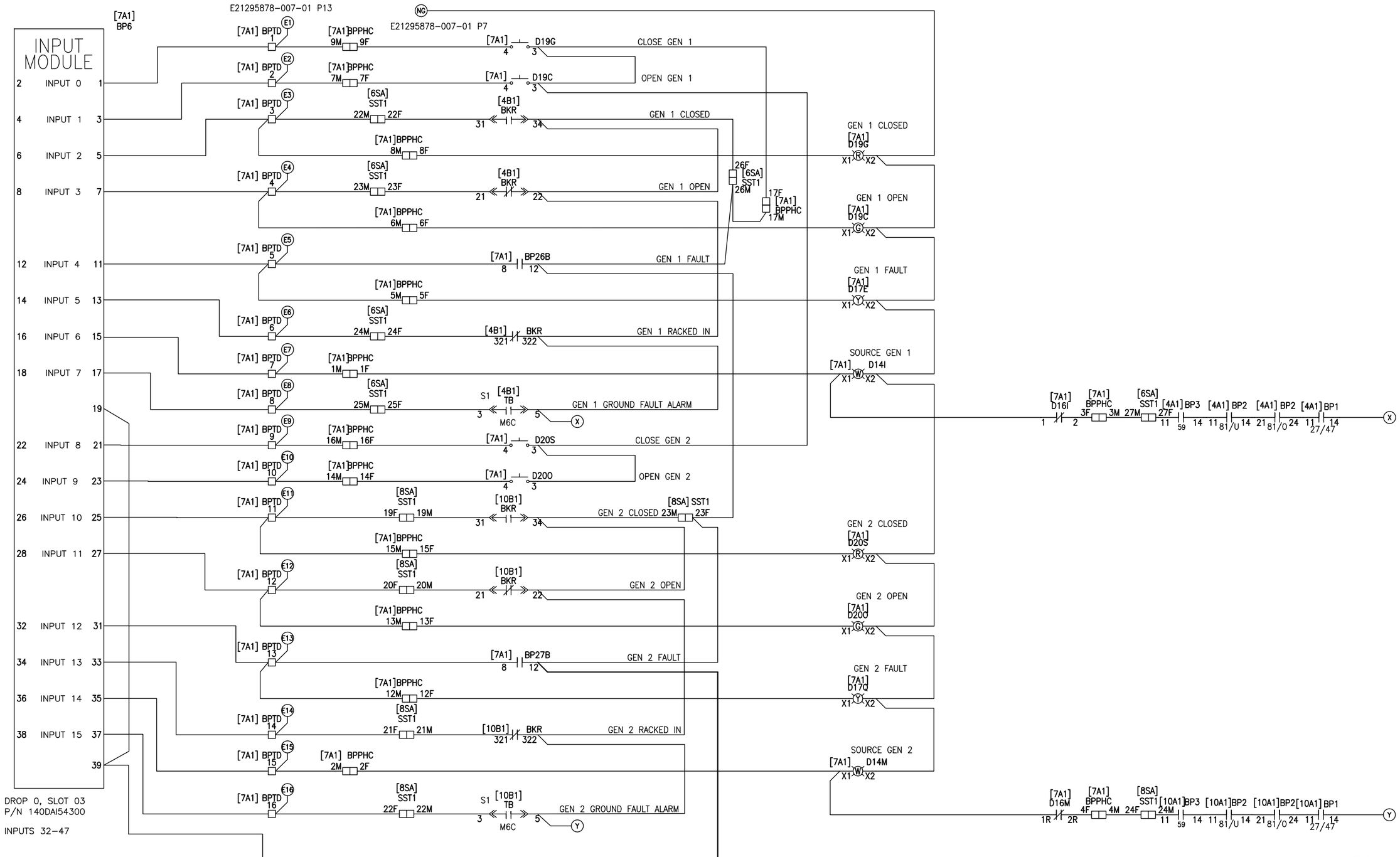

NOTES:

1. BREAKER OPEN AND IN CONNECTED POSITION. ALL RELAYS SHOWN DE-ENERGIZED, UNLATCHED AND RESET.

PLC CONTROL

JOB NAME:	BUILDING #22 RENOVATIONS	EQUIPMENT DESIGNATION:	SEC SWG A & B NEMA 1
JOB LOCATION:	ALBANY, NY	EQUIPMENT TYPE:	PZ4 SWITCHGEAR
DRAWN BY:	T.THOMPSON	DRAWING TYPE:	ELEMENTARY DIAGRAM
ENGR:	JJ		SQUARE D Schneider Electric
DATE:	DECEMBER 04, 2006		
DRAWING STATUS:	RECORD	DWG# E21295878-007-01	PG 8 OF 14 REV A

REV	DESCRIPTION	BY	DATE	B	REVISED PER MARKUPS	DRF	11/07/2014	-	----	--	--/--/--
A	UPDATED DRWG	JM	05/16/06	-	----	--	--/--/--	-	----	--	--/--/--

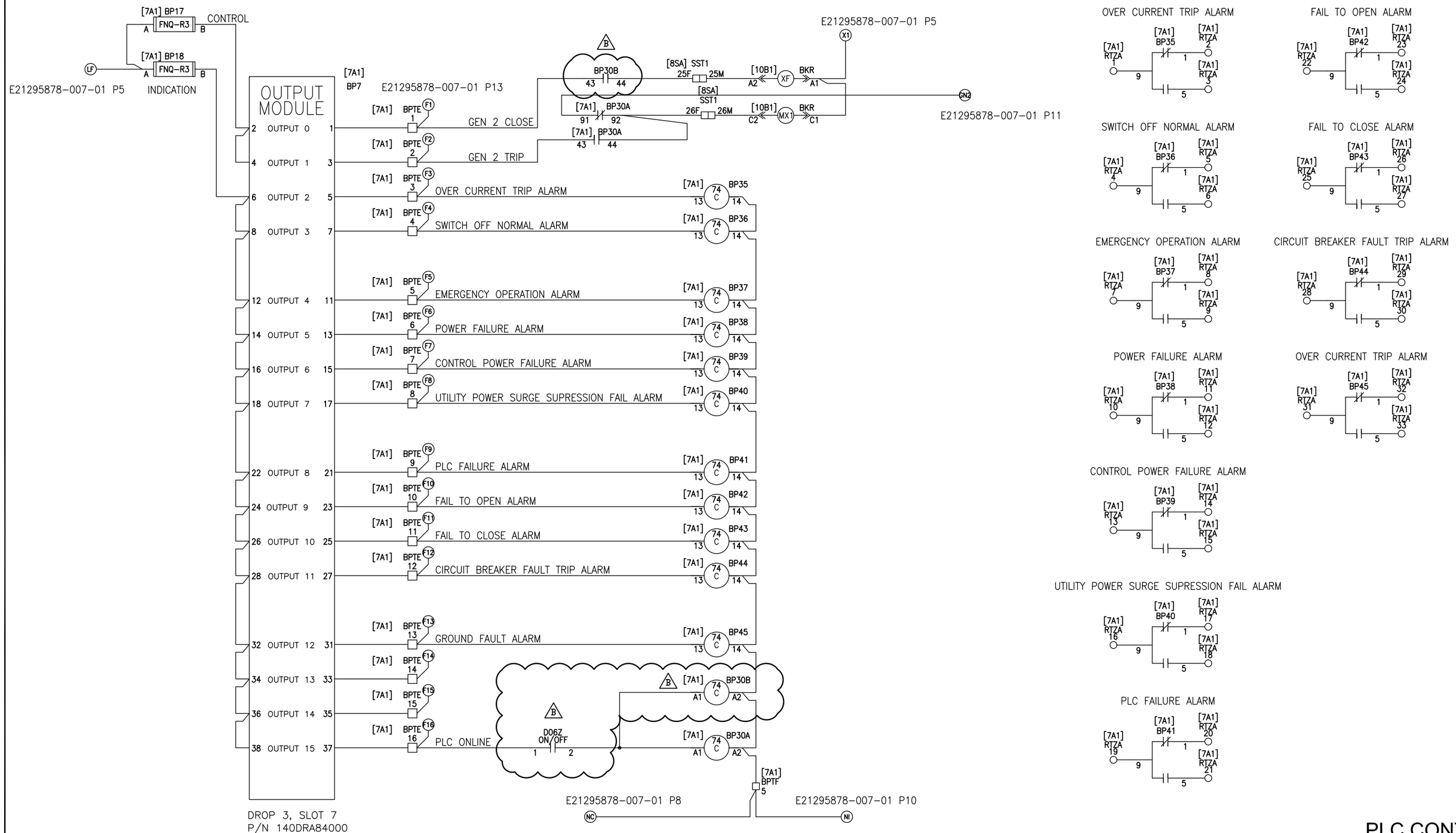

PLC CONTROL

NOTES:

1. PULL APART TERMINAL BLOCKS. TOP OR RIGHT PORTION(MALE WILL BE SCREWED TO THE PAN. BOTTOM OR LEFT PORTION (FEMALE) WILL BE USED ON DOOR HARNESS.
2. BREAKER OPEN AND IN CONNECTED POSITION. ALL RELAYS SHOWN DE-ENERGIZED, UNLATCHED AND RESET.

JOB NAME:	BUILDING #22 RENOVATIONS	EQUIPMENT DESIGNATION:	SEC SWG A & B NEMA 1
JOB LOCATION:	ALBANY, NY	EQUIPMENT TYPE:	PZ4 SWITCHGEAR
DRAWN BY:	T.THOMPSON	DRAWING TYPE:	ELEMENTARY DIAGRAM
ENGR:	JJ		SQUARE D Schneider Electric
DATE:	DECEMBER 04, 2006		
DRAWING STATUS:	RECORD	DWG# E21295878-007-01	PG 9 OF 14 REV B

REV	DESCRIPTION	BY	DATE	B	ADD SPARE INPUT CARD	TT	06/7/06	–	----	--	--/--/--
A	UPDATED DRWG	JM	05/16/06	–	----	--	--/--/--	–	----	--	--/--/--

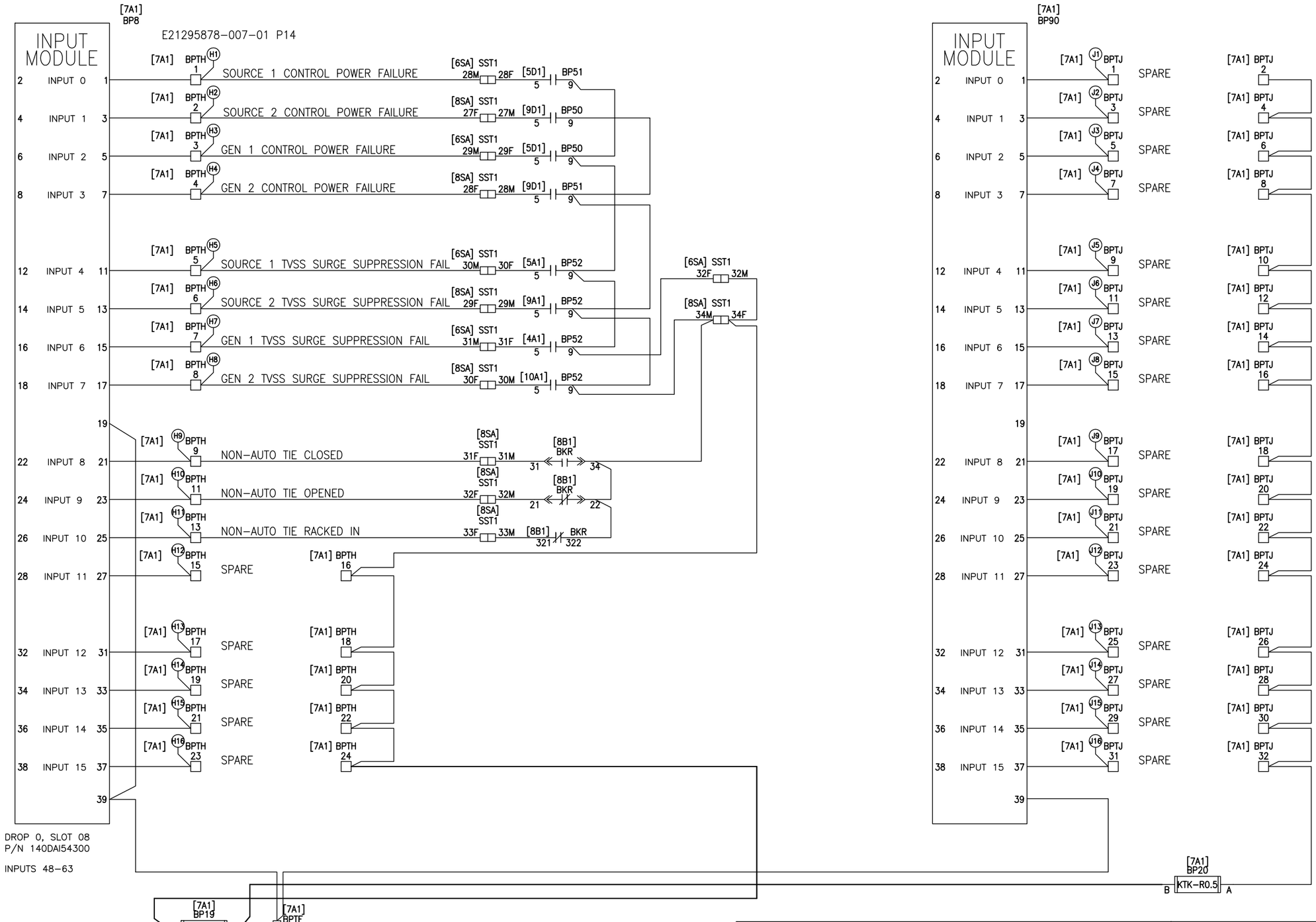

PLC CONTROL

NOTES:

1. BREAKER OPEN AND IN CONNECTED POSITION. ALL RELAYS SHOWN DE-ENERGIZED, UNLATCHED AND RESET.

JOB NAME:	BUILDING #22 RENOVATIONS	EQUIPMENT DESIGNATION:	SEC SWG A & B NEMA 1
JOB LOCATION:	ALBANY, NY	EQUIPMENT TYPE:	PZ4 SWITCHGEAR
DRAWN BY:	T.THOMPSON	DRAWING TYPE:	ELECTRICAL DIAGRAM
ENGR:	JJ		SQUARE D Schneider Electric
DATE:	DECEMBER 04, 2006		
DRAWING STATUS:	RECORD	DWG# E21295878-007-01	PG 10 OF 14 REV B

REV	DESCRIPTION	BY	DATE	–	----	--	--/--/--	–	----	--	--/--/--
A	UPDATED DRWG	JM	05/16/06	–	----	--	--/--/--	–	----	--	--/--/--

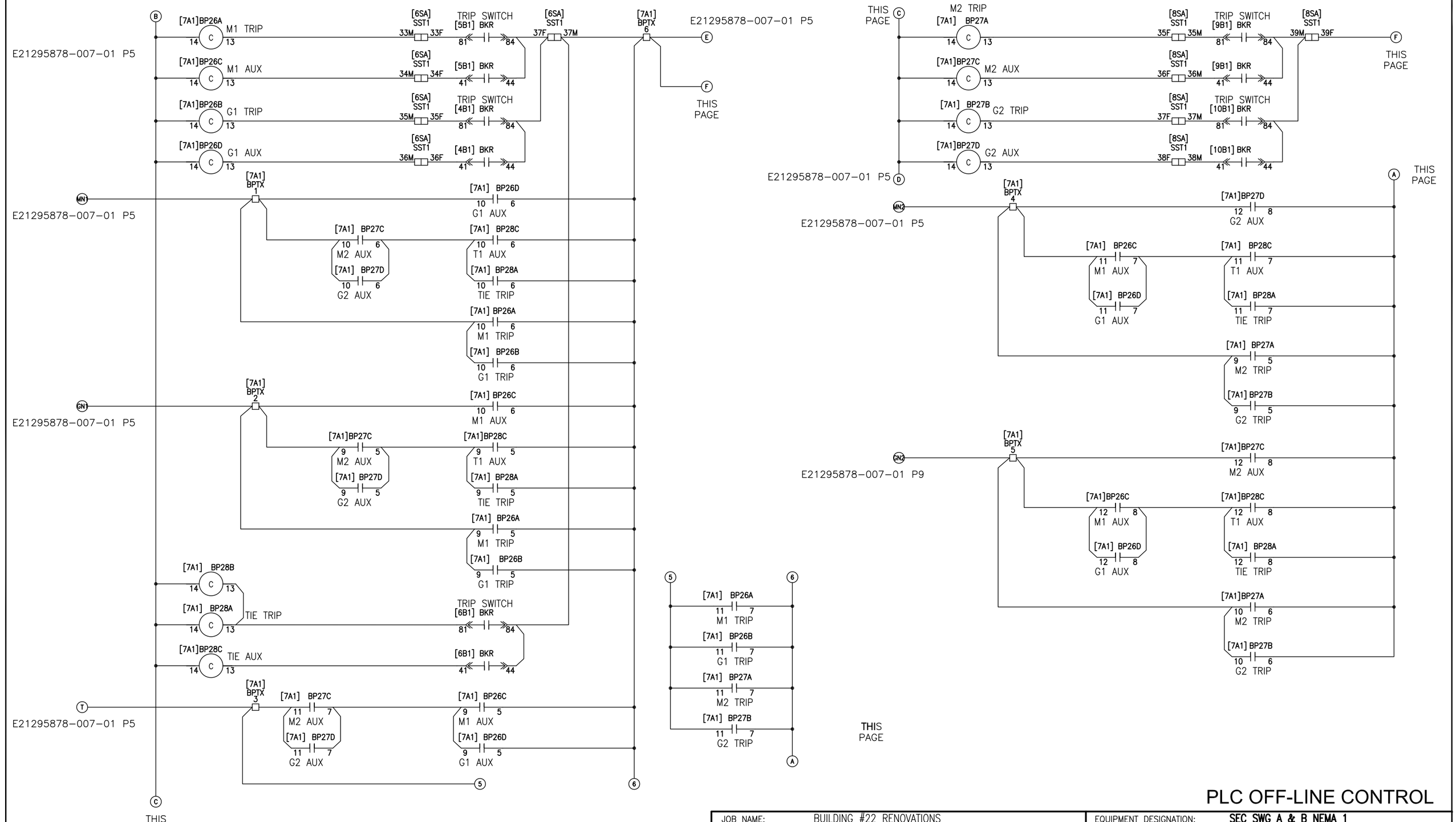

PLC OFF-LINE CONTROL

NOTES:

1. PULL APART TERMINAL BLOCKS. TOP OR RIGHT PORTION(MALE WILL BE SCREWED TO THE PAN. BOTTOM OR LEFT PORTION (FEMALE) WILL BE USED ON DOOR HARNESS.
2. BREAKER OPEN AND IN CONNECTED POSITION. ALL RELAYS SHOWN DE-ENERGIZED, UNLATCHED AND RESET.

JOB NAME:	BUILDING #22 RENOVATIONS	EQUIPMENT DESIGNATION:	SEC SWG A & B NEMA 1
JOB LOCATION:	ALBANY, NY	EQUIPMENT TYPE:	PZ4 SWITCHGEAR
DRAWN BY:	T.THOMPSON	DRAWING TYPE:	ELEMENTARY DIAGRAM
ENGR:	JJ		SQUARE D Schneider Electric
DATE:	DECEMBER 04, 2006		
DRAWING STATUS:	RECORD	DWG# E21295878-007-01	PG 11 OF 14 REV A

REV	DESCRIPTION	BY	DATE	–	----	--	--/--/--	–	----	--	--/--/--
A	UPDATED DRWG	JM	05/16/06	–	----	--	--/--/--	–	----	--	--/--/--

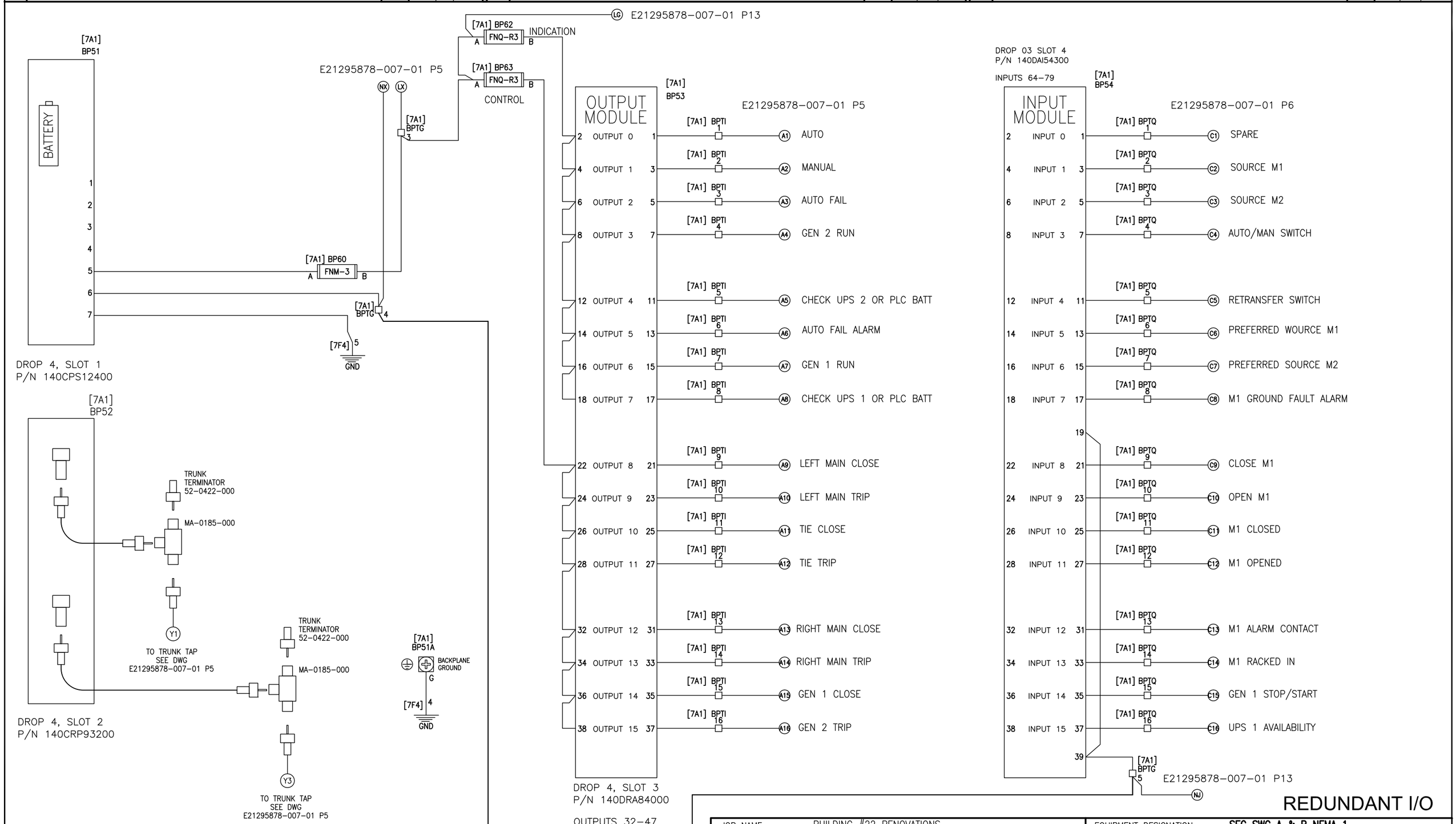

NOTES:

1. PULL APART TERMINAL BLOCKS. TOP OR RIGHT PORTION(MALE WILL BE SCREWED TO THE PAN. BOTTOM OR LEFT PORTION (FEMALE) WILL BE USED ON DOOR HARNESS.
2. BREAKER OPEN AND IN CONNECTED POSITION. ALL RELAYS SHOWN DE-ENERGIZED, UNLATCHED AND RESET.

JOB NAME:	BUILDING #22 RENOVATIONS	EQUIPMENT DESIGNATION:	SEC SWG A & B NEMA 1
JOB LOCATION:	ALBANY, NY	EQUIPMENT TYPE:	PZ4 SWITCHGEAR
DRAWN BY:	T.THOMPSON	DRAWING TYPE:	ELEMENTARY DIAGRAM
ENGR:	JJ		SQUARE D Schneider Electric
DATE:	DECEMBER 04, 2006		
DRAWING STATUS:	RECORD	DWG# E21295878-007-01	PG 12 OF 14 REV A

REV	DESCRIPTION	BY	DATE	–	----	--	--/--/--	–	----	--	--/--/--
A	UPDATED DRWG	JM	05/16/06	–	----	--	--/--/--	–	----	--	--/--/--

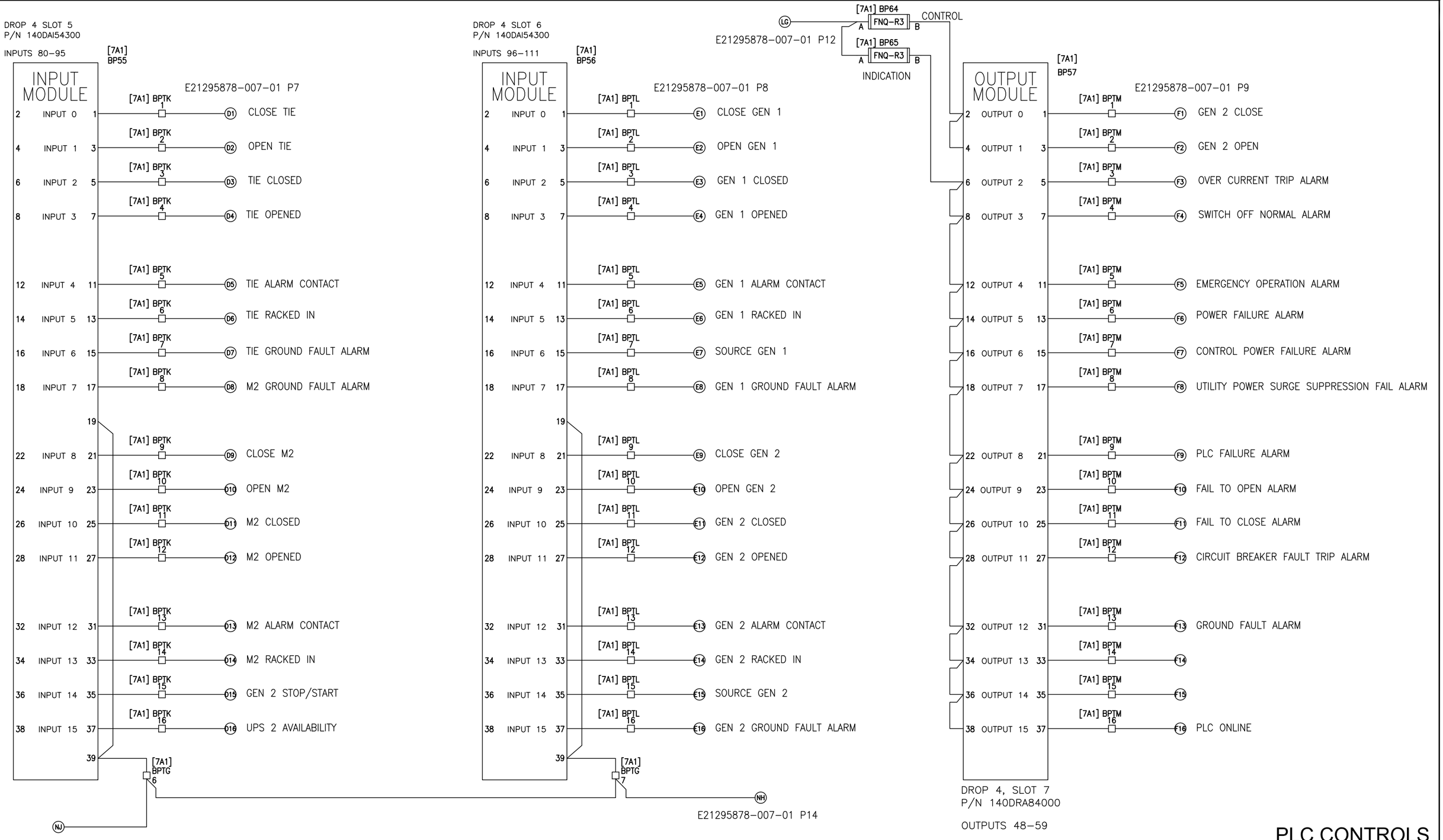

PLC CONTROLS

NOTES:

1. PULL APART TERMINAL BLOCKS. TOP OR RIGHT PORTION(MALE WILL BE SCREWED TO THE PAN. BOTTOM OR LEFT PORTION (FEMALE) WILL BE USED ON DOOR HARNESS.
2. BREAKER OPEN AND IN CONNECTED POSITION. ALL RELAYS SHOWN DE–ENERGIZED, UNLATCHED AND RESET.

JOB NAME:	BUILDING #22 RENOVATIONS	EQUIPMENT DESIGNATION:	SEC SWG A & B NEMA 1
JOB LOCATION:	ALBANY, NY	EQUIPMENT TYPE:	PZ4 SWITCHGEAR
DRAWN BY:	T.THOMPSON	DRAWING TYPE:	ELEMENTARY DIAGRAM
ENGR:	JJ		SQUARE D Schneider Electric
DATE:	DECEMBER 04, 2006		
DRAWING STATUS:	RECORD	DWG# E21295878–007–01	PG 13 OF 14 REV A

REV	DESCRIPTION	BY	DATE	B	ADD SPARE INPUT CARD	TT	06/7/06	–	----	--	--/--/--
A	UPDATED DRWG	JM	05/16/06	–	----	--	--/--/--	–	----	--	--/--/--

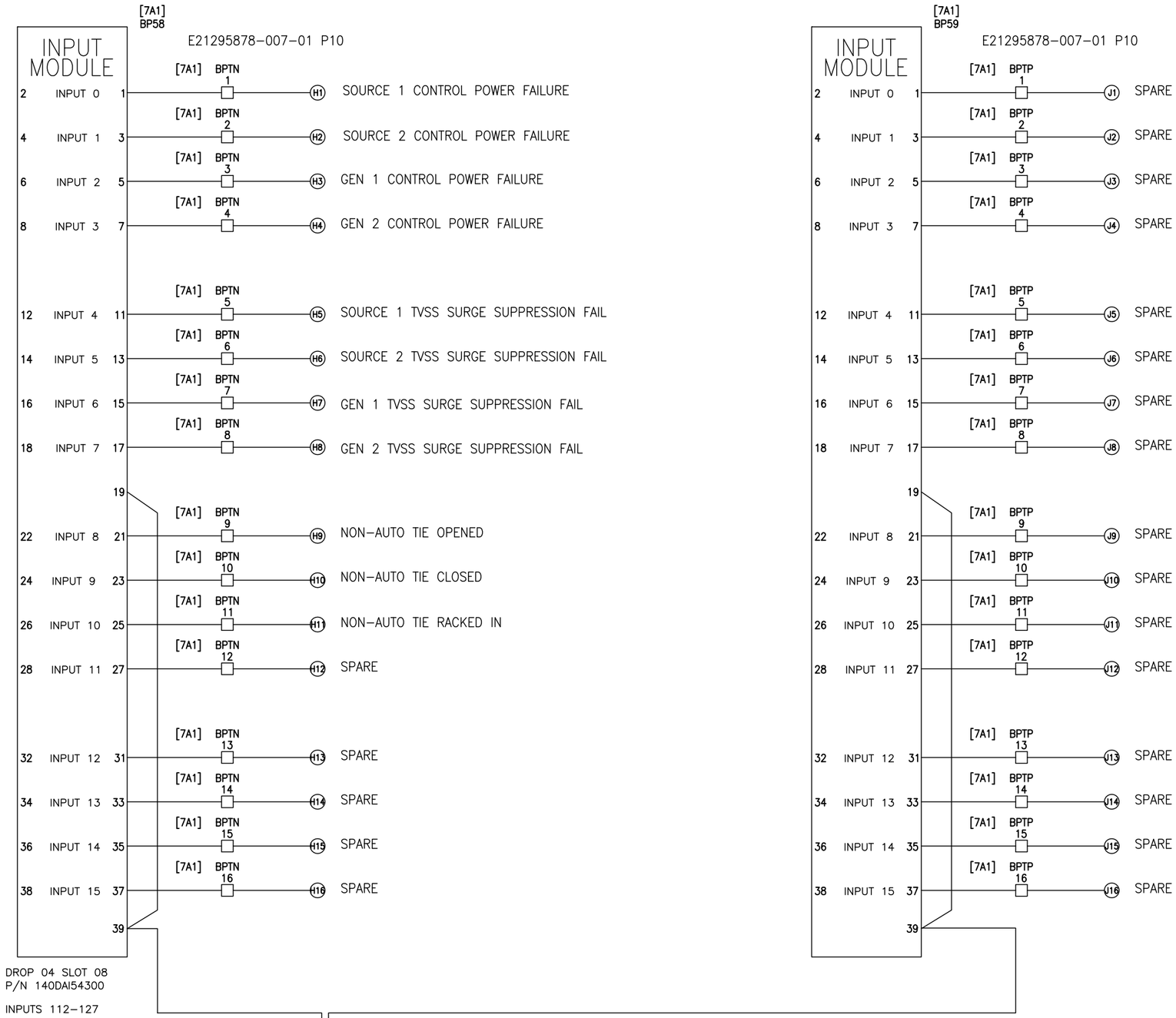

PLC CONTROL

NOTES:

1. BREAKER OPEN AND IN CONNECTED POSITION. ALL RELAYS SHOWN DE-ENERGIZED, UNLATCHED AND RESET.

JOB NAME:	BUILDING #22 RENOVATIONS	EQUIPMENT DESIGNATION:	SEC SWG A & B NEMA 1
JOB LOCATION:	ALBANY, NY	EQUIPMENT TYPE:	PZ4 SWITCHGEAR
DRAWN BY:	T.THOMPSON	DRAWING TYPE:	ELEMENTARY DIAGRAM
ENGR:	JJ		SQUARE D Schneider Electric
DATE:	DECEMBER 04, 2006		
DRAWING STATUS:	RECORD	DWG# E21295878-007-01	PG 14 OF 14 REV B

REV	DESCRIPTION	BY	DATE								
A	UPDATED DRWG	JM	05/16/06	B	ADD 24V TO M6C	JJ	02/22/07	–	----	--	--/--/--
				C	ADD 24V TO M6C	JJ	02/22/07	–	----	--	--/--/--

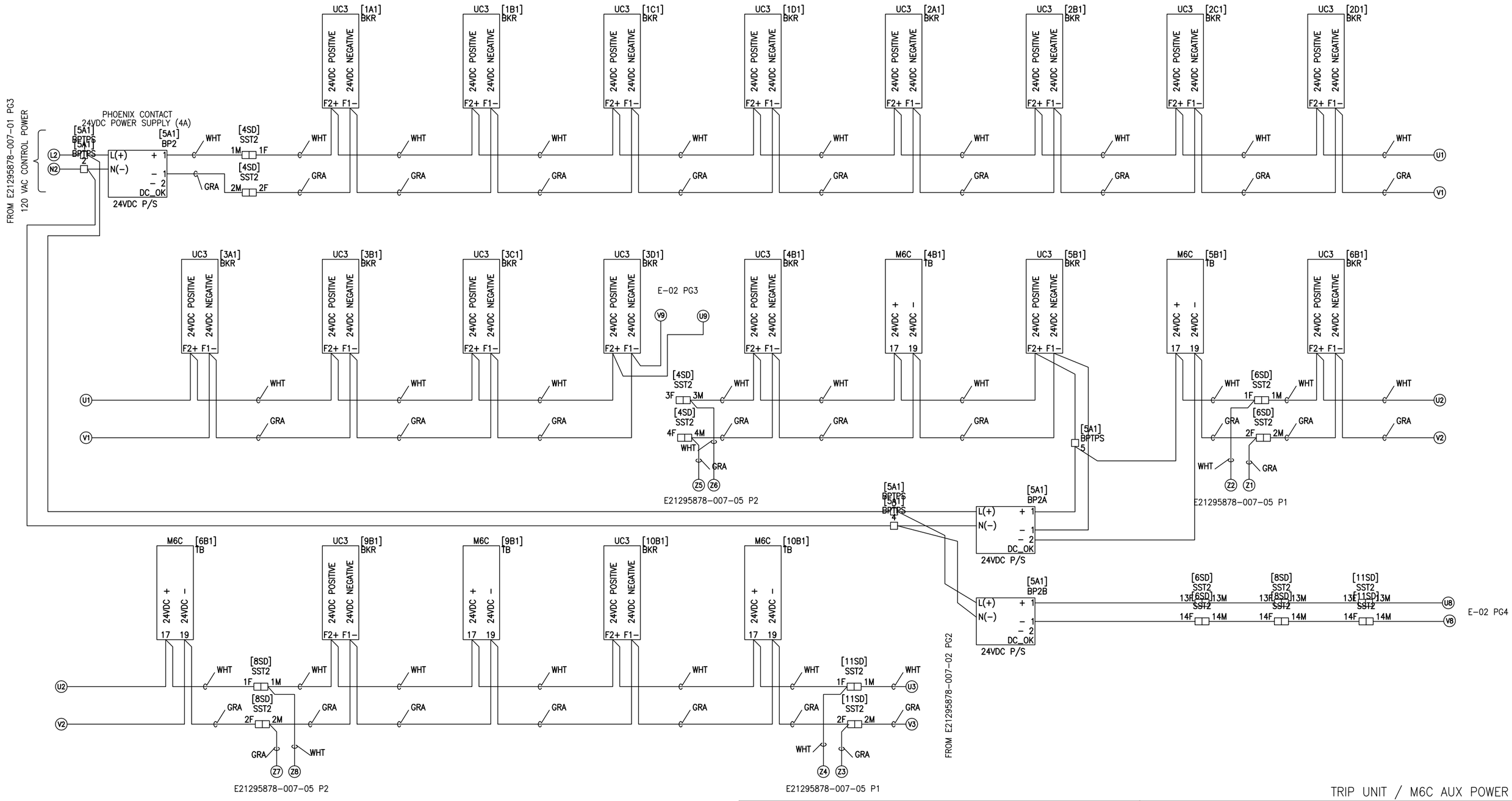

TRIP UNIT / M6C AUX POWER

JOB NAME:	BUILDING #22 RENOVATIONS	EQUIPMENT DESIGNATION:	SEC SWG A & B NEMA 1
JOB LOCATION:	ALBANY, NY	EQUIPMENT TYPE:	PZ4 SWITCHGEAR
DRAWN BY:	J. BROWN	DRAWING TYPE:	ELEMENTARY DIAGRAM
ENGR:	JJ		SQUARE D Schneider Electric
DATE:	DECEMBER 04, 2006		
DRAWING STATUS:	RECORD	DWG# E21295878-007-02	PG 1 OF 4 REV C

REV	DESCRIPTION	BY	DATE								
B	ADD 24V TO M6C	JJ	02/22/07	–	----	--	--/--/--
A	UPDATED DRWG	JM	05/16/06	–	----	--	--/--/--	–	----	--	--/--/--

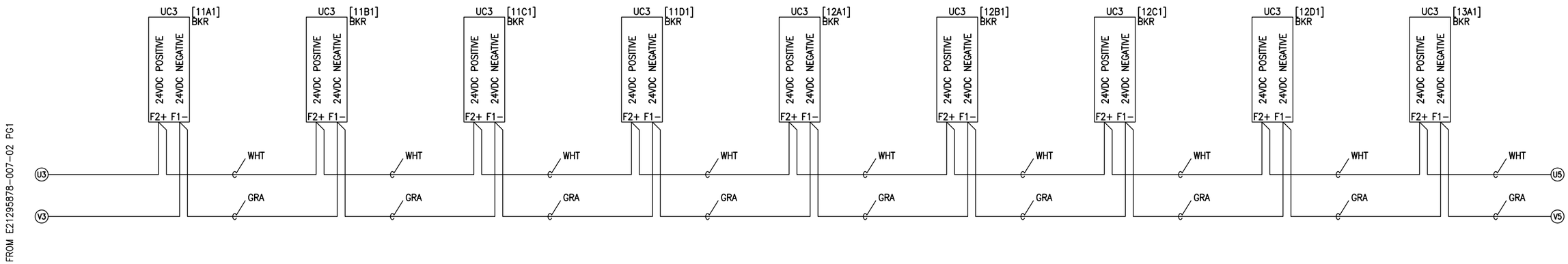

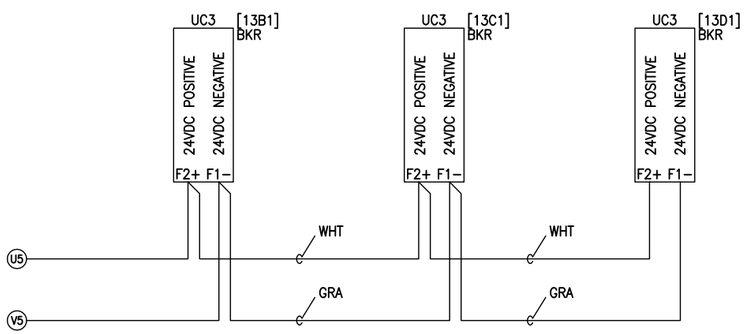

TRIP UNIT / M6C AUX POWER

JOB NAME:	BUILDING #22 RENOVATIONS	EQUIPMENT DESIGNATION:	**SEC SWG A & B NEMA 1**
JOB LOCATION:	ALBANY, NY	EQUIPMENT TYPE:	PZ4 SWITCHGEAR
DRAWN BY:	J. BROWN	DRAWING TYPE:	ELEMENTARY DIAGRAM
ENGR:	JJ		SQUARE D Schneider Electric
DATE:	DECEMBER 04, 2006		
DRAWING STATUS:	RECORD	DWG# E21295878-007-02	PG 2 OF 4 REV B

REV	DESCRIPTION	BY	DATE								
B	ADD 24V TO M6C	JJ	02/22/07	–	----	--	--/--/--
A	UPDATED DRWG	JM	05/16/06	–	----	--	--/--/--	–	----	--	--/--/--

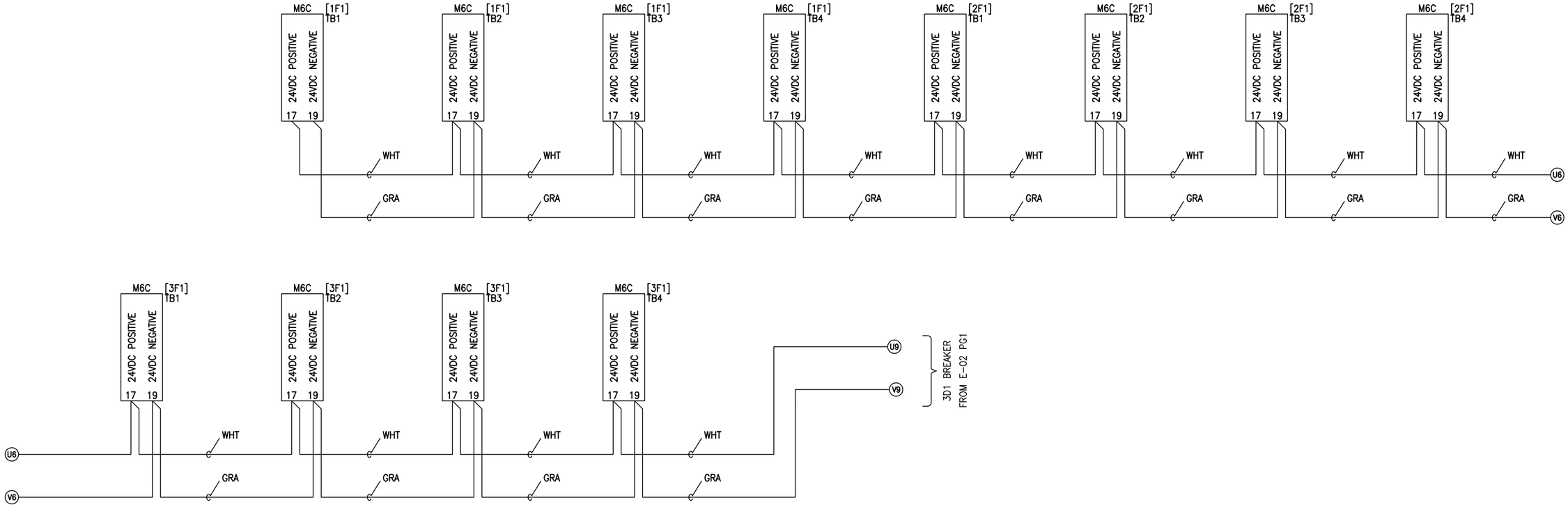

TRIP UNIT / M6C AUX POWER

JOB NAME:	BUILDING #22 RENOVATIONS	EQUIPMENT DESIGNATION:	SEC SWG A & B NEMA 1
JOB LOCATION:	ALBANY, NY	EQUIPMENT TYPE:	PZ4 SWITCHGEAR
DRAWN BY:	J. BROWN	DRAWING TYPE:	ELEMENTARY DIAGRAM
ENGR:	JJ		SQUARE D Schneider Electric
DATE:	DECEMBER 04, 2006		
DRAWING STATUS:	RECORD	DWG# E21295878-007-02	PG 3 OF 4 REV B

REV	DESCRIPTION	BY	DATE	B	ADD 24V TO M6C	JJ	02/22/07	–	----	--	--/--/--
A	UPDATED DRWG	JM	05/16/06	–	----	--	--/--/--	–	----	--	--/--/--

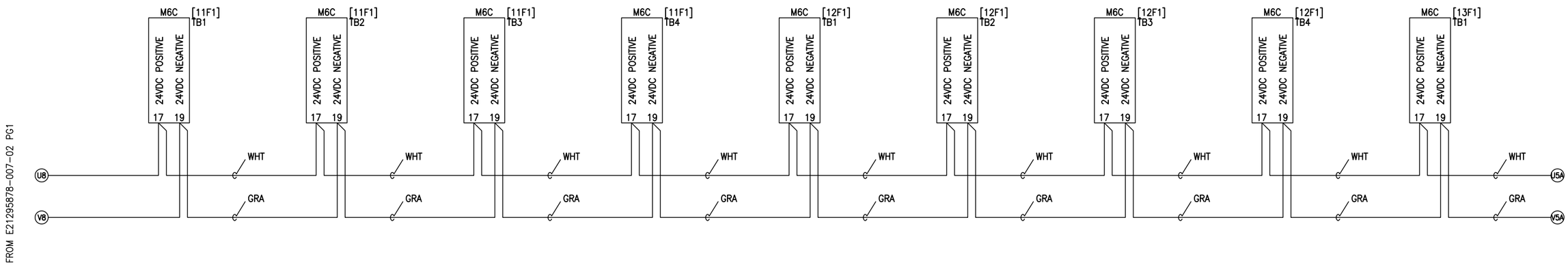

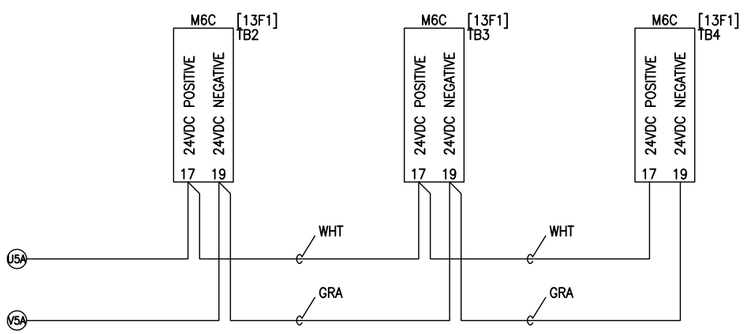

TRIP UNIT / M6C AUX POWER

JOB NAME:	BUILDING #22 RENOVATIONS	EQUIPMENT DESIGNATION:	**SEC SWG A & B NEMA 1**
JOB LOCATION:	ALBANY, NY	EQUIPMENT TYPE:	PZ4 SWITCHGEAR
DRAWN BY:	J. BROWN	DRAWING TYPE:	ELEMENTARY DIAGRAM
ENGR:	JJ		SQUARE D Schneider Electric
DATE:	DECEMBER 04, 2006		
DRAWING STATUS:	RECORD	DWG# E21295878-007-02	PG 4 OF 4 REV B

REV	DESCRIPTION	BY	DATE	–	----	--	--/--/--	–	----	--	--/--/--
A	UPDATED DRWG	JM	05/16/06	–	----	--	--/--/--	–	----	--	--/--/--

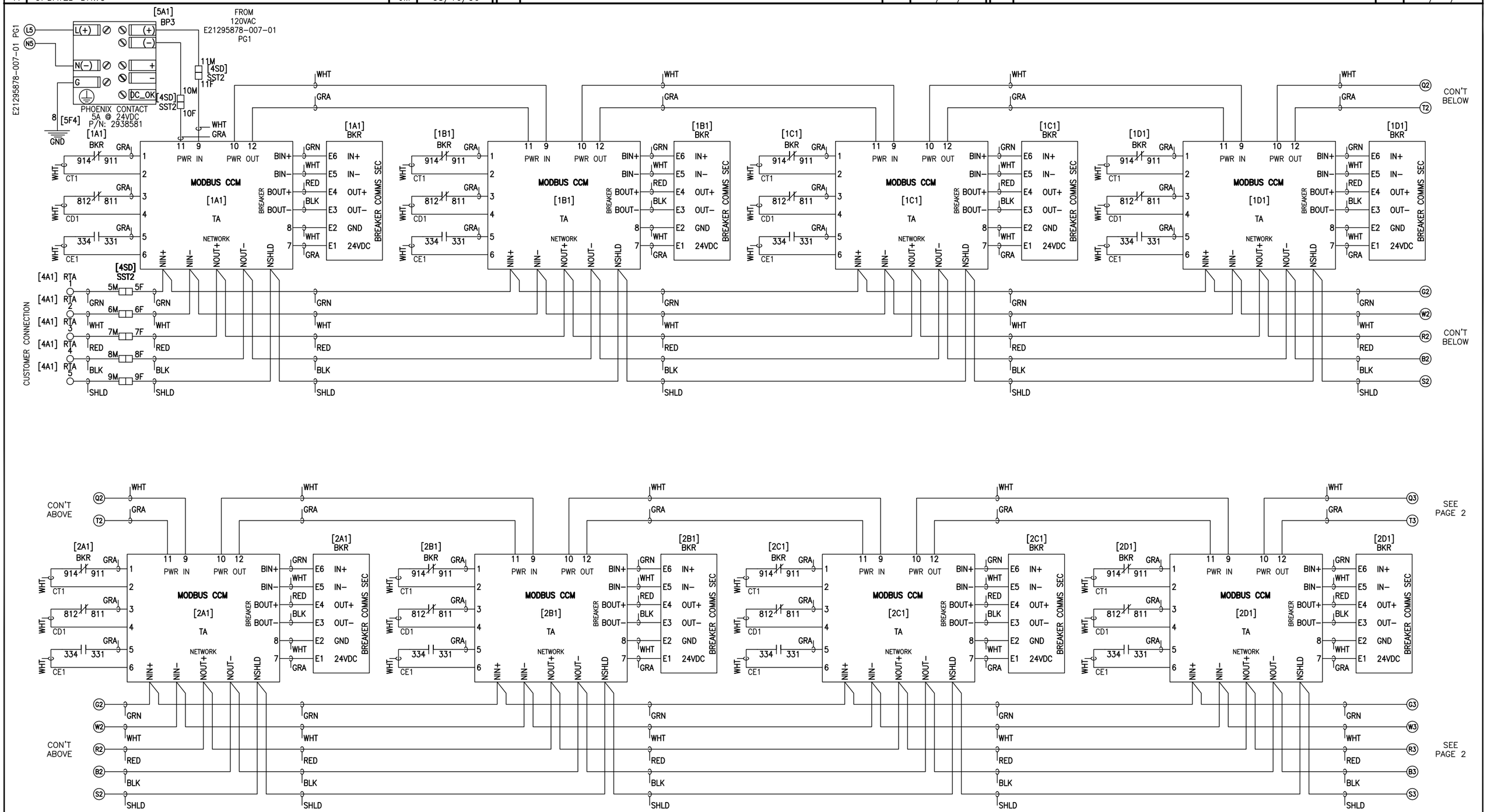

JOB NAME:	BUILDING #22 RENOVATIONS	EQUIPMENT DESIGNATION:	SEC SWG A & B NEMA 1
JOB LOCATION:	ALBANY, NY	EQUIPMENT TYPE:	PZ4 SWITCHGEAR
DRAWN BY:	J. BROWN	DRAWING TYPE:	ELEMENTARY DIAGRAM
ENGR:	JJ		SQUARE D Schneider Electric
DATE:	DECEMBER 04, 2006		
DRAWING STATUS:	RECORD	DWG# E21295878-007-03	PG 1 OF 4 REV A

REV	DESCRIPTION	BY	DATE									
B	ADD OFFPAGE CONNECION NOTE	JJ	01/17/07	–	----	--	--/--/--
A	UPDATED DRWG	JM	05/16/06	–	----	--	--/--/--	–	----	--	--/--/--

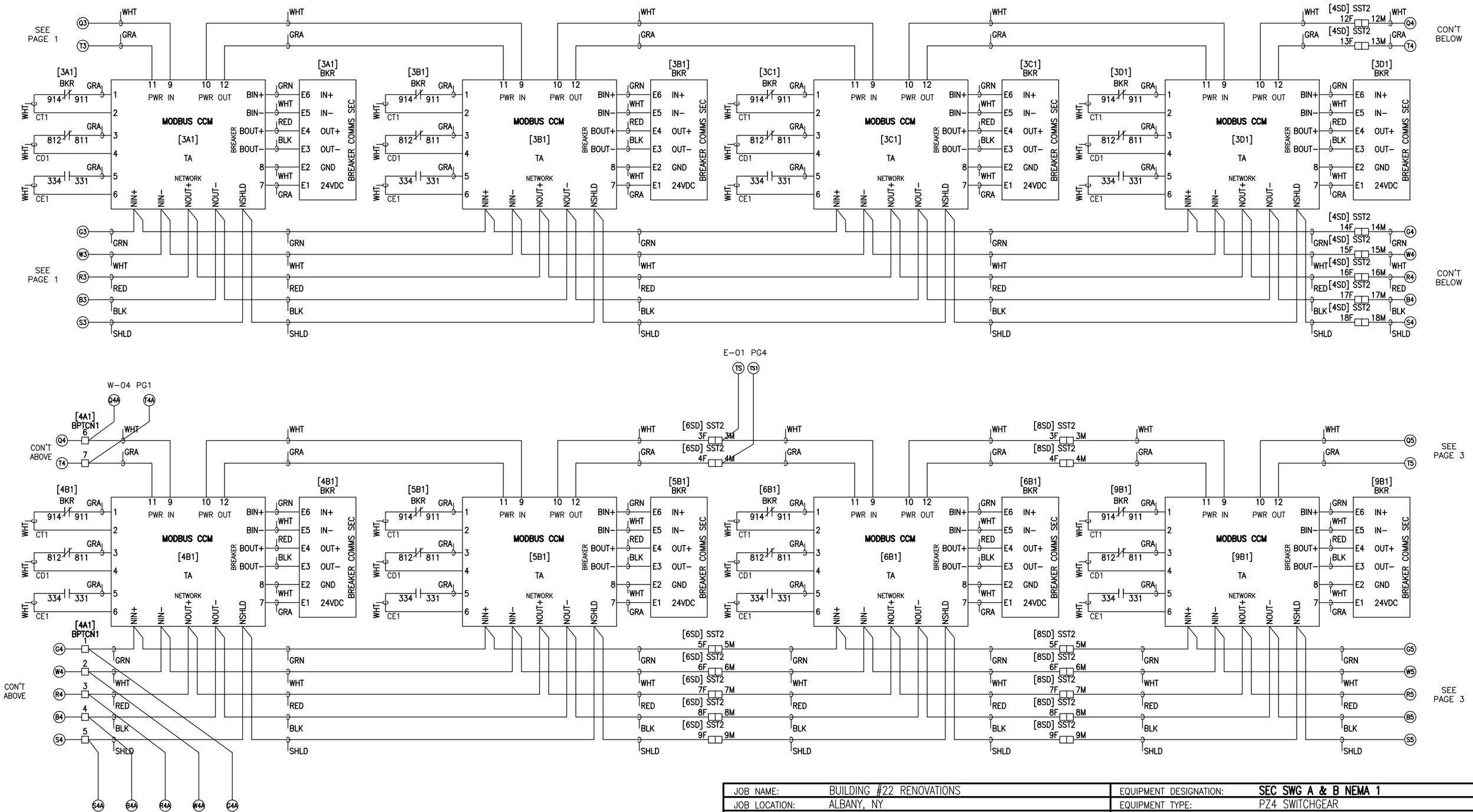

JOB NAME:	BUILDING #22 RENOVATIONS	EQUIPMENT DESIGNATION:	SEC SWG A & B NEMA 1
JOB LOCATION:	ALBANY, NY	EQUIPMENT TYPE:	PZ4 SWITCHGEAR
DRAWN BY:	J. BROWN	DRAWING TYPE:	ELEMENTARY DIAGRAM
ENGR:	JJ		SQUARE D Schneider Electric
DATE:	DECEMBER 04, 2006		
DRAWING STATUS:	RECORD	DWG# E21295878-007-03	PG 2 OF 4 REV B

REV	DESCRIPTION	BY	DATE	–	----	--	--/--/--	–	----	--	--/--/--
A	UPDATED DRWG	JM	05/16/06	–	----	--	--/--/--	–	----	--	--/--/--

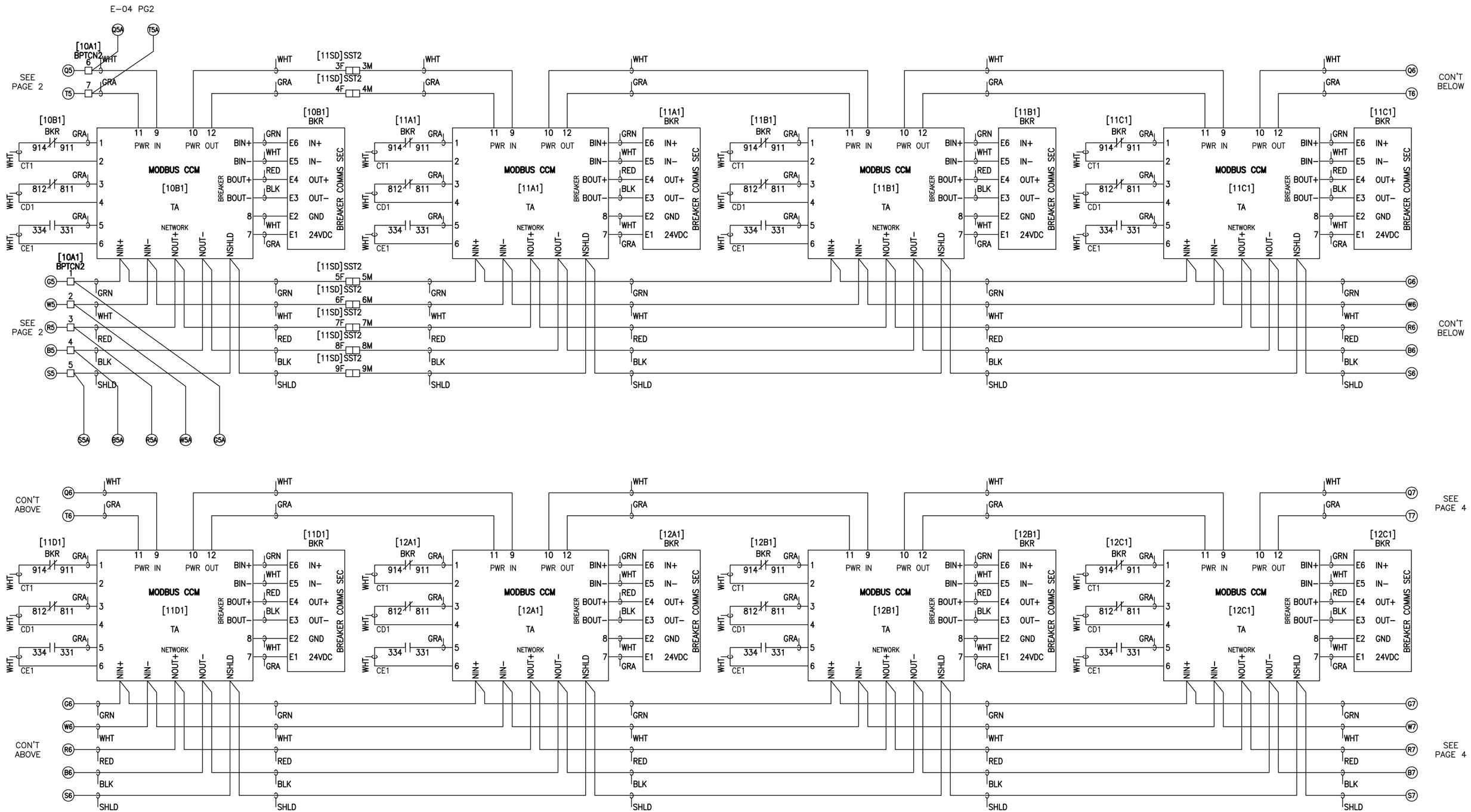

JOB NAME:	BUILDING #22 RENOVATIONS	EQUIPMENT DESIGNATION:	SEC SWG A & B NEMA 1
JOB LOCATION:	ALBANY, NY	EQUIPMENT TYPE:	PZ4 SWITCHGEAR
DRAWN BY:	J. BROWN	DRAWING TYPE:	ELEMENTARY DIAGRAM
ENGR:	JJ		SQUARE D Schneider Electric
DATE:	DECEMBER 04, 2006		
DRAWING STATUS:	RECORD	DWG# E21295878-007-03	PG 3 OF 4 REV A

REV	DESCRIPTION	BY	DATE	–	----	--	--/--/--	–	----	--	--/--/--
A	UPDATED DRWG	JM	05/16/06	–	----	--	--/--/--	–	----	--	--/--/--

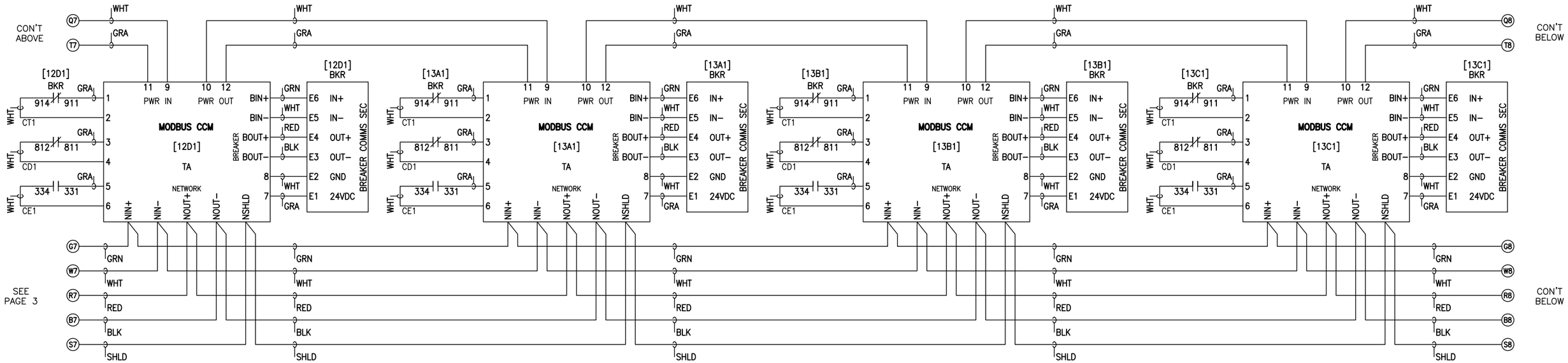

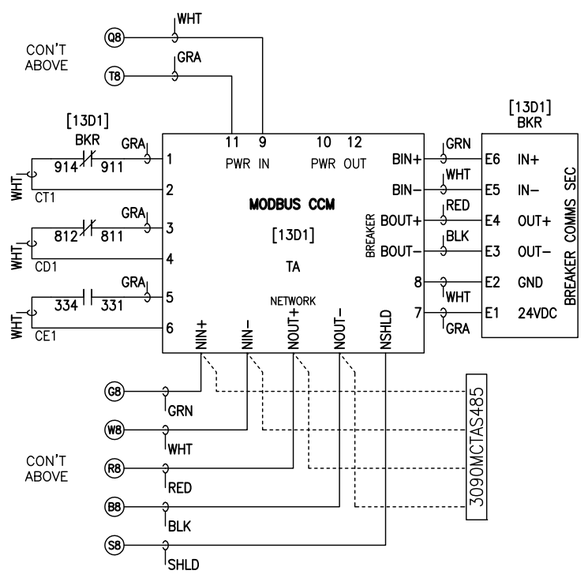

JOB NAME:	BUILDING #22 RENOVATIONS	EQUIPMENT DESIGNATION:	SEC SWG A & B NEMA 1
JOB LOCATION:	ALBANY, NY	EQUIPMENT TYPE:	PZ4 SWITCHGEAR
DRAWN BY:	J. BROWN	DRAWING TYPE:	ELECTRICAL DIAGRAM
ENGR:	JJ		SQUARE D Schneider Electric
DATE:	DECEMBER 04, 2006		
DRAWING STATUS:	RECORD	DWG# E21295878-007-03	PG 4 OF 4 REV A

REV	DESCRIPTION	BY	DATE	–	----	--	--/--/--	B	4E3 PHTB	JJ	02/19/07
A	UPDATED DRWG	JM	05/16/06	–	----	--	--/--/--	–	----	--	--/--/--

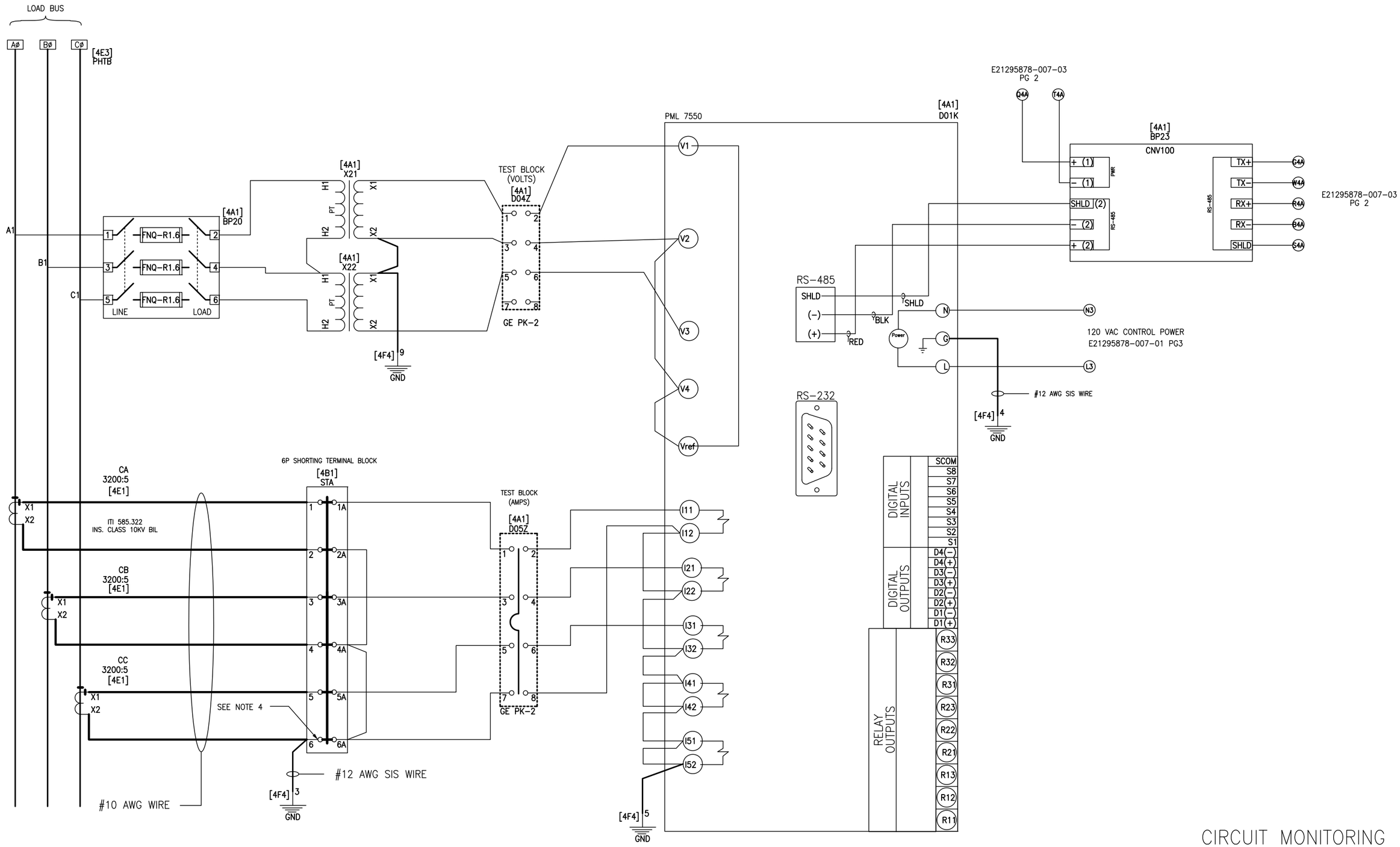

CIRCUIT MONITORING

NOTES

1. ALL WIRING TO BE TYPE "SIS" (U.L. LISTED).
2. WIRE SIZE SHALL BE #14 AWG UNLESS OTHERWISE NOTED.
3. SPLICE THE SHIELD WIRES WHEN CONNECTING THE BELDEN 8723 CABLE FOR COMMUNICATIONS
4. GROUNDED TERMINAL OF THE SHORTING BLOCK TO BE A PAN HEAD SCREW.

JOB NAME:	BUILDING #22 RENOVATIONS	EQUIPMENT DESIGNATION:	SEC SWG A & B NEMA 1
JOB LOCATION:	ALBANY, NY	EQUIPMENT TYPE:	PZ4 SWITCHGEAR
DRAWN BY:	J. BROWN	DRAWING TYPE:	ELEMENTARY DIAGRAM
ENGR:	JJ		SQUARE D Schneider Electric
DATE:	DECEMBER 04, 2006		
DRAWING STATUS:	RECORD	DWG# E21295878-007-04	PG 1 OF 2 REV B

REV	DESCRIPTION	BY	DATE	–	----	--	--/--/--	B	PHTB 10E3	JJ	02/19/07
A	UPDATED DRWG	JM	05/16/06	–	----	--	--/--/--	–	----	--	--/--/--

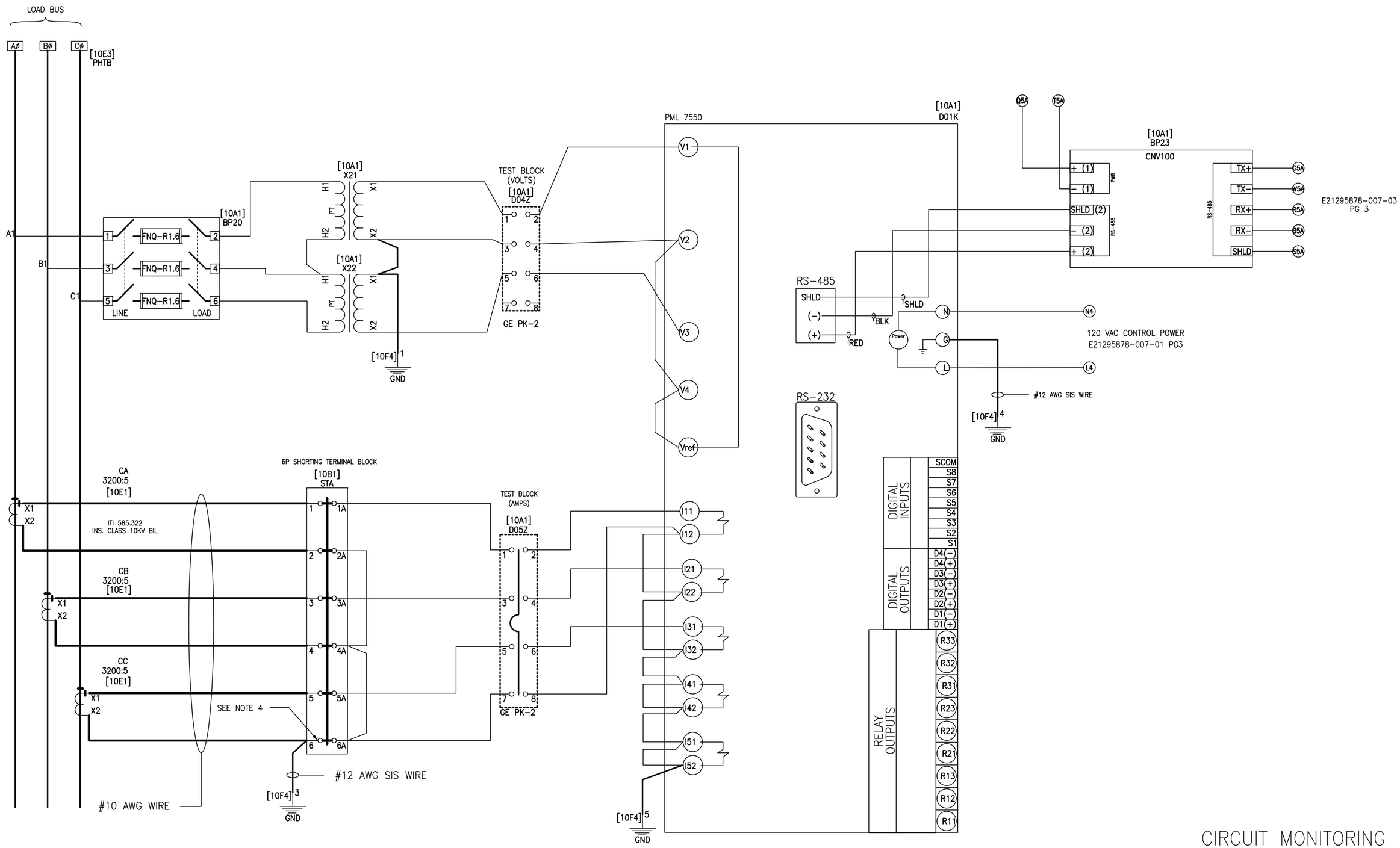

CIRCUIT MONITORING

NOTES

1. ALL WIRING TO BE TYPE "SIS" (U.L. LISTED).
2. WIRE SIZE SHALL BE #14 AWG UNLESS OTHERWISE NOTED.
3. SPLICE THE SHIELD WIRES WHEN CONNECTING THE BELDEN 8723 CABLE FOR COMMUNICATIONS
4. GROUNDED TERMINAL OF THE SHORTING BLOCK TO BE A PAN HEAD SCREW.

JOB NAME:	BUILDING #22 RENOVATIONS	EQUIPMENT DESIGNATION:	SEC SWG A & B NEMA 1
JOB LOCATION:	ALBANY, NY	EQUIPMENT TYPE:	PZ4 SWITCHGEAR
DRAWN BY:	J. BROWN	DRAWING TYPE:	ELEMENTARY DIAGRAM
ENGR:	JJ		SQUARE D Schneider Electric
DATE:	DECEMBER 04, 2006		
DRAWING STATUS:	RECORD	DWG# E21295878-007-04	PG 2 OF 2 REV B

REV	DESCRIPTION	BY	DATE	B	REVISED TVSS WIRING	TT	02/07/07	–	----	--	--/--/--
A	UPDATED DRWG	JM	05/16/06	–	----	--	--/--/--	–	----	--	--/--/--

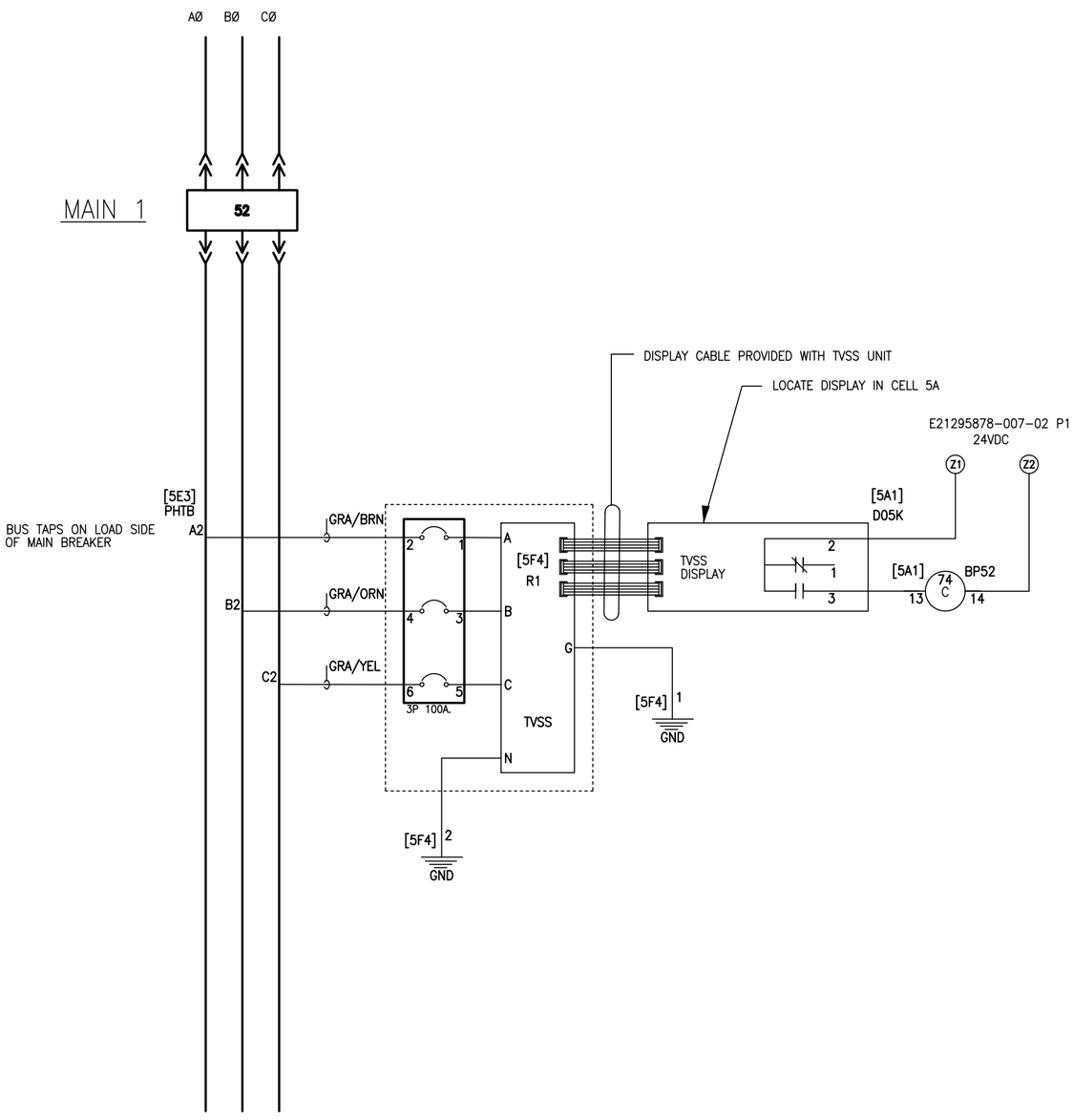

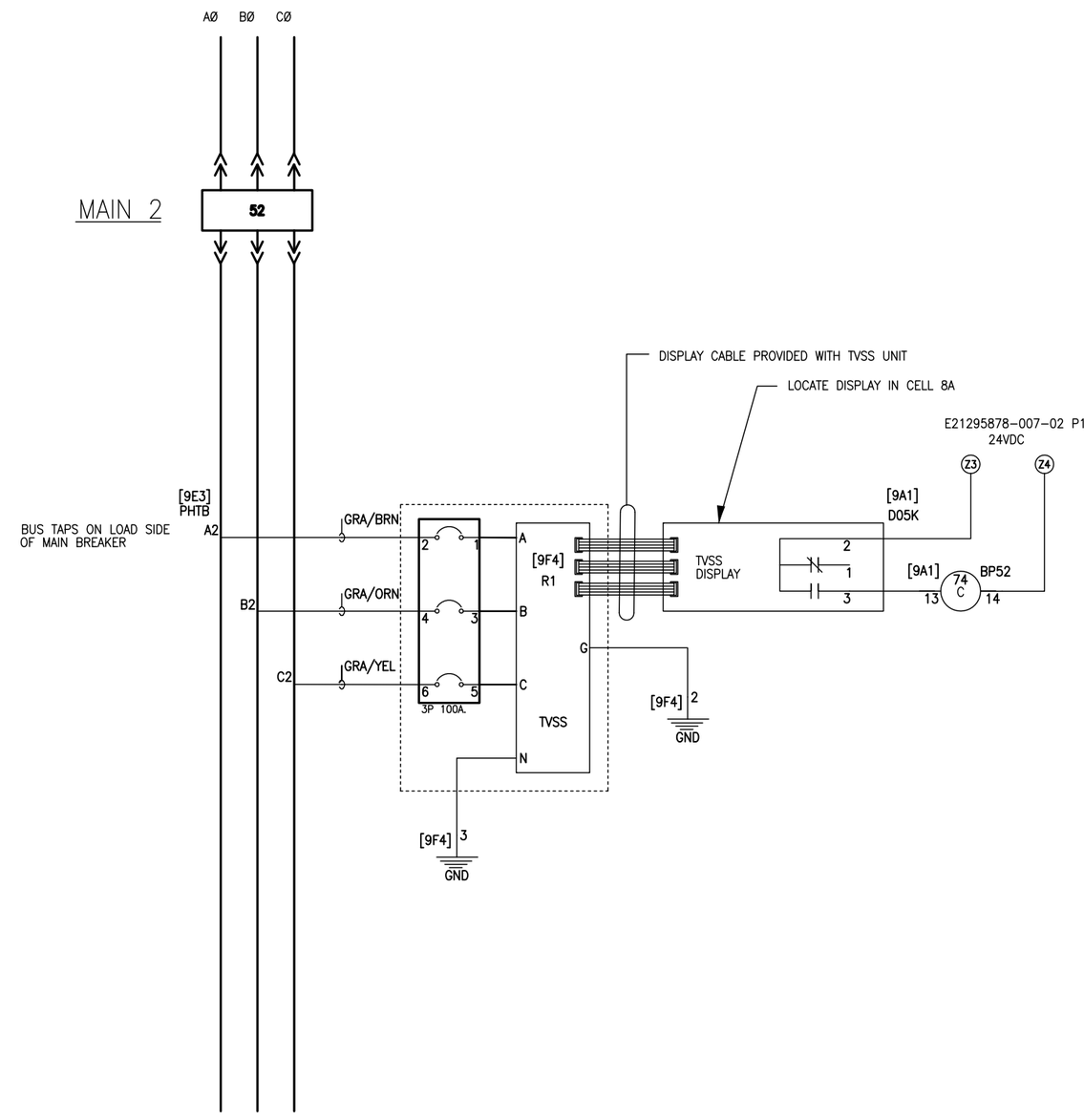

TVSS

NOTES:

1. CONNECTION OF OPTIONAL REMOTE MONITOR TVS12RMU USES FORM C DRY CONTACT
2. DISPLAY DRY CONTACTS ARE RATED 24VDC/AC – 2 AMPS
3. CUSTOMER TO USE SOLID OR STRANDED 30 TO 14 AWG WIRE TO CONNECT FORM C DISPLAY DRY CONTACT TO REMOTE MONITOR
4. REMOTE MONITOR INCLUDES A 120VAC TO 12VDC ADAPTER WITH A SIX-FOOT POWER CORD

JOB NAME:	BUILDING #22 RENOVATIONS	EQUIPMENT DESIGNATION:	SEC SWG A & B NEMA 1
JOB LOCATION:	ALBANY, NY	EQUIPMENT TYPE:	PZ4 SWITCHGEAR
DRAWN BY:	J. BROWN	DRAWING TYPE:	ELEMENTARY DIAGRAM
ENGR:	JJ		SQUARE D Schneider Electric
DATE:	DECEMBER 04, 2006		
DRAWING STATUS:	RECORD	DWG# E21295878-007-05	PG 1 OF 2 REV B

REV	DESCRIPTION	BY	DATE	B	REVISED TVSS WIRING	TT	02/07/07	–	----	--	--/--/--
A	UPDATED DRWG	JM	05/16/06	–	----	--	--/--/--	–	----	--	--/--/--

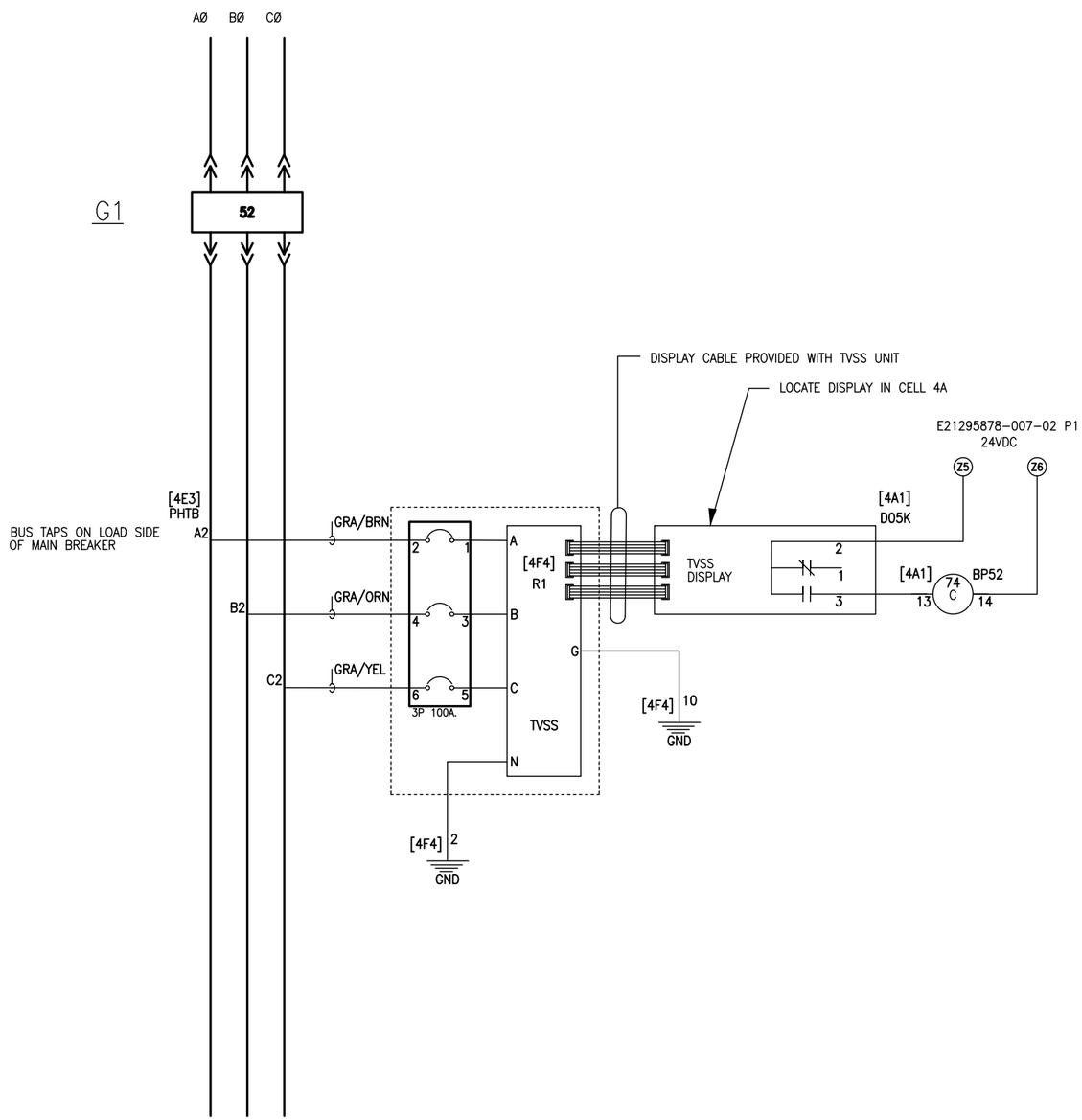

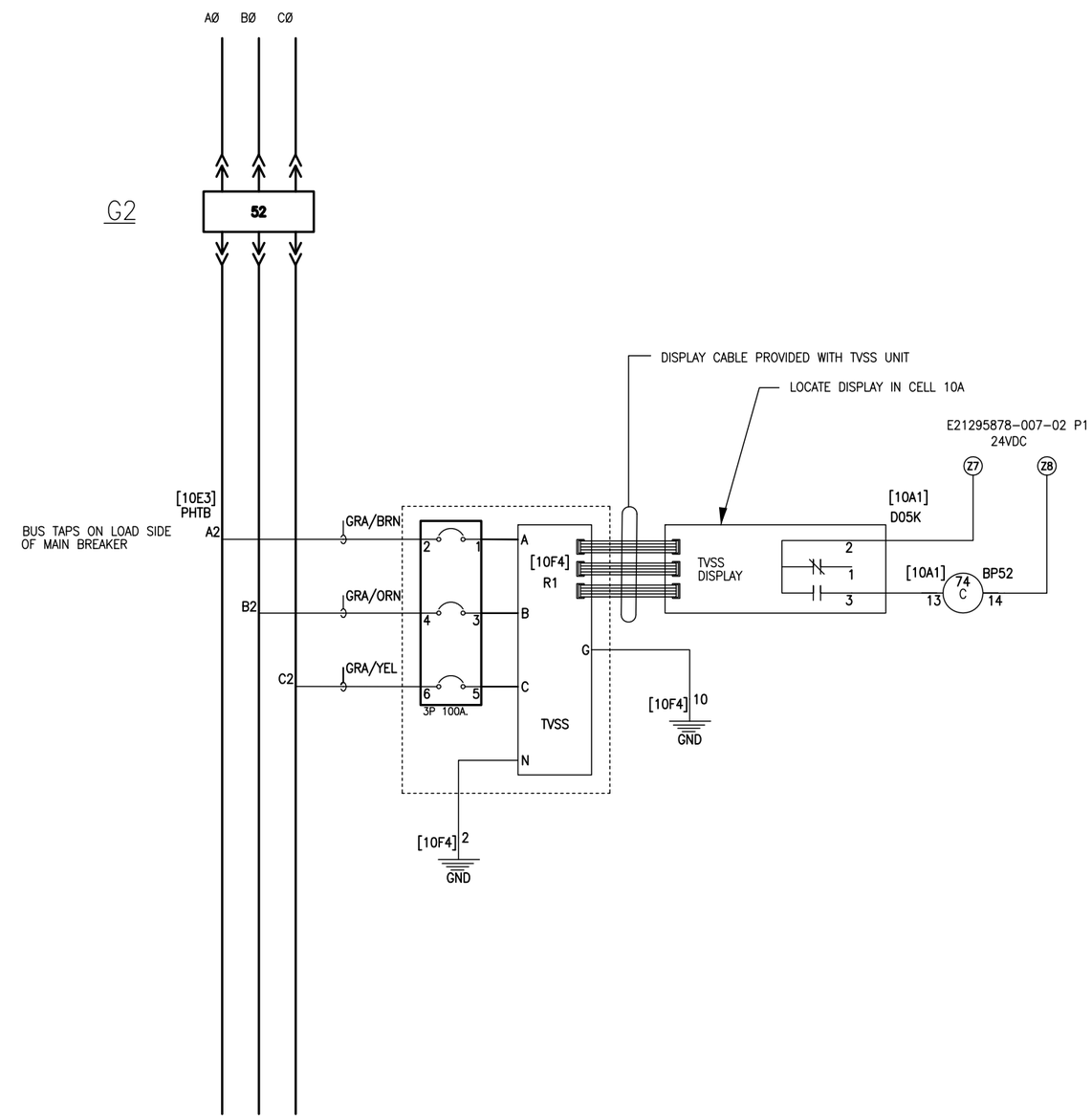

TVSS

NOTES:

1. CONNECTION OF OPTIONAL REMOTE MONITOR TVS12RMU USES FORM C DRY CONTACT
2. DISPLAY DRY CONTACTS ARE RATED 24VDC/AC – 2 AMPS
3. CUSTOMER TO USE SOLID OR STRANDED 30 TO 14 AWG WIRE TO CONNECT FORM C DISPLAY DRY CONTACT TO REMOTE MONITOR
4. REMOTE MONITOR INCLUDES A 120VAC TO 12VDC ADAPTER WITH A SIX-FOOT POWER CORD

JOB NAME:	BUILDING #22 RENOVATIONS	EQUIPMENT DESIGNATION:	SEC SWG A & B NEMA 1
JOB LOCATION:	ALBANY, NY	EQUIPMENT TYPE:	PZ4 SWITCHGEAR
DRAWN BY:	J. BROWN	DRAWING TYPE:	ELEMENTARY DIAGRAM
ENGR:	JJ		SQUARE D Schneider Electric
DATE:	DECEMBER 04, 2006		
DRAWING STATUS:	RECORD	DWG# E21295878-007-05	PG 2 OF 2 REV B

REV	DESCRIPTION	BY	DATE	–	----	--	--/--/--	–	----	--	--/--/--
A	UPDATED DRWG	JM	05/16/06	–	----	--	--/--/--	–	----	--	--/--/--

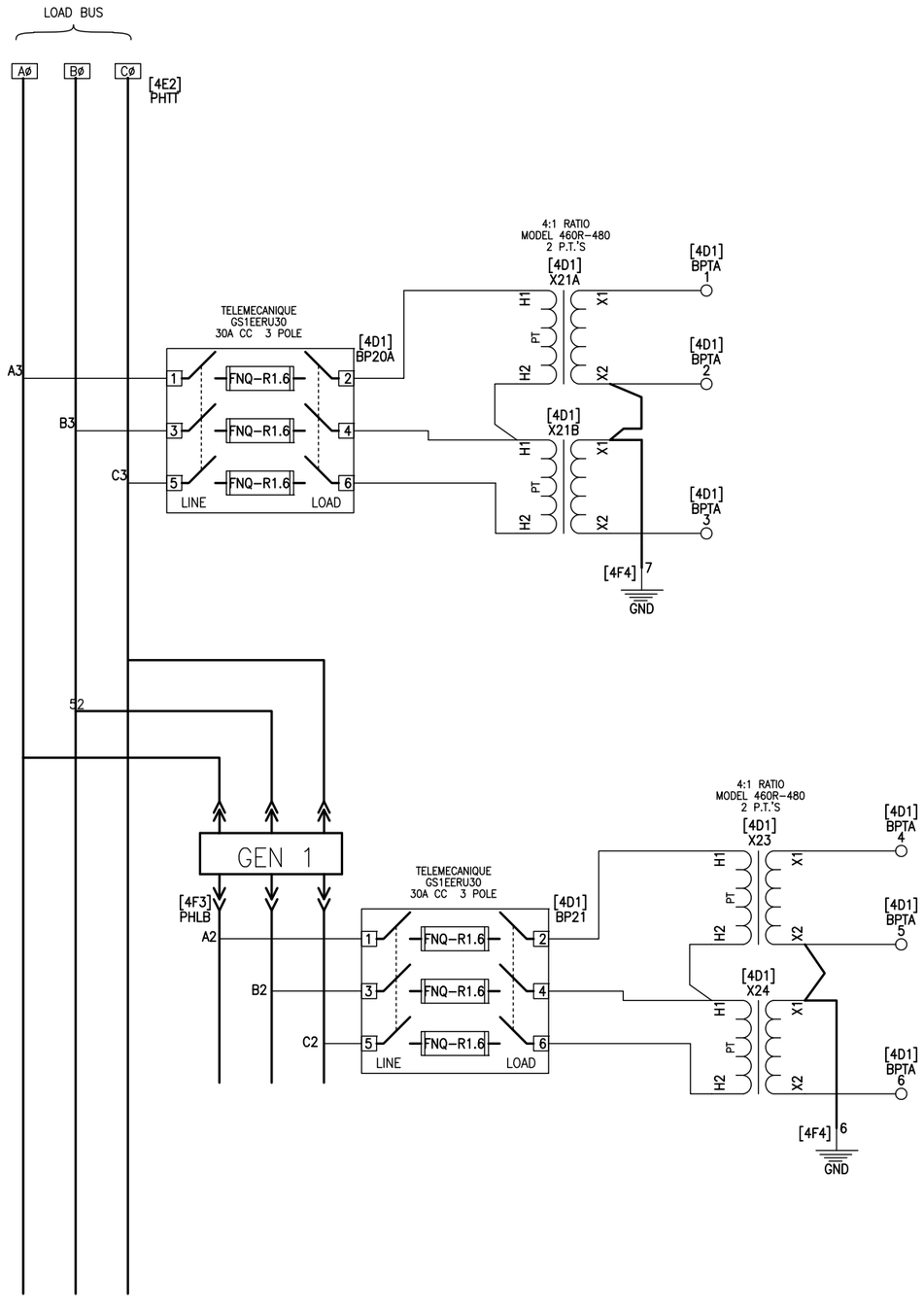

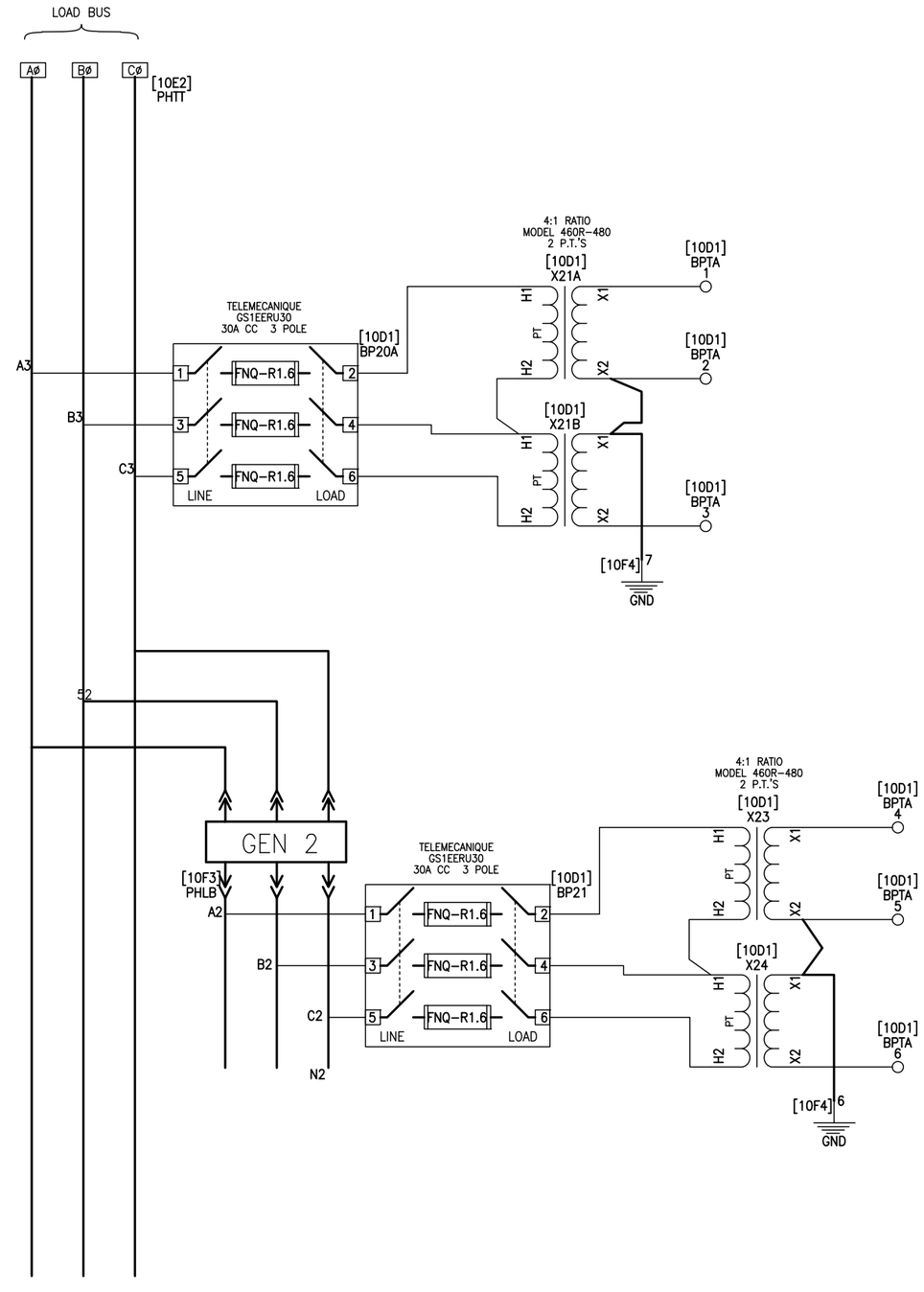

LINE AND LOAD SIDE PT CONNECTIONS

NOTES

1. ALL WIRING TO BE TYPE "SIS" (U.L. LISTED).
2. WIRE SIZE SHALL BE #14 AWG UNLESS OTHERWISE NOTED.
3. SPLICE THE SHIELD WIRES WHEN CONNECTING THE BELDEN 8723 CABLE FOR COMMUNICATIONS
4. GROUNDED TERMINAL OF THE SHORTING BLOCK TO BE A PAN HEAD SCREW.

JOB NAME:	BUILDING #22 RENOVATIONS	EQUIPMENT DESIGNATION:	SEC SWG A & B NEMA 1
JOB LOCATION:	ALBANY, NY	EQUIPMENT TYPE:	PZ4 SWITCHGEAR
DRAWN BY:	J. BROWN	DRAWING TYPE:	ELEMENTARY DIAGRAM
ENGR:	JJ		SQUARE D Schneider Electric
DATE:	DECEMBER 04, 2006		
DRAWING STATUS:	RECORD	DWG# E21295878-007-06	PG 1 OF 1 REV A

REV	DESCRIPTION	BY	DATE	—	----	--	--/--/--	—	----	--	--/--/--
—	----	--	--/--/--	—	----	--	--/--/--	—	----	--	--/--/--

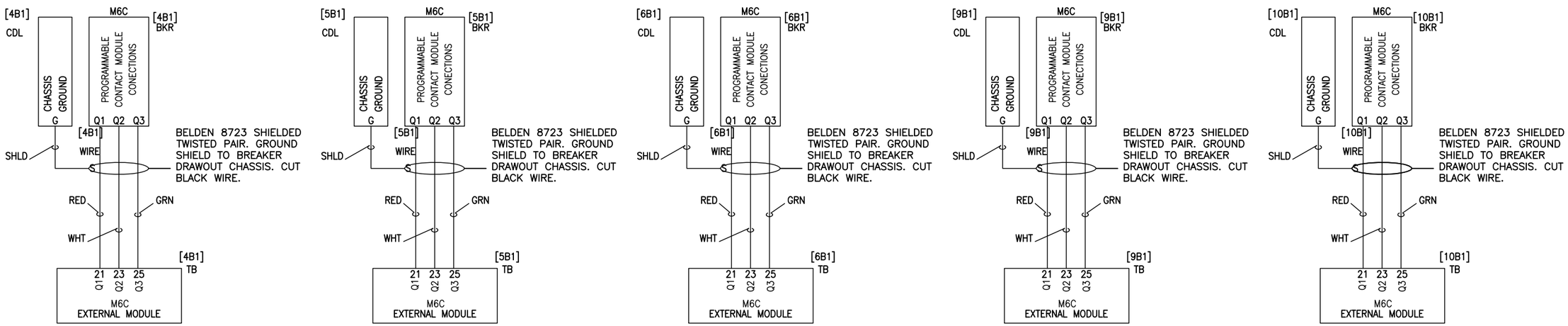

M6C CONNECTIONS TO EXTERNAL MODULE

JOB NAME:	BUILDING #22 RENOVATIONS	EQUIPMENT DESIGNATION:	SEC SWG A & B NEMA 1
JOB LOCATION:	ALBANY, NY	EQUIPMENT TYPE:	PZ4 SWITCHGEAR
DRAWN BY:	J. BROWN	DRAWING TYPE:	ELEMENTARY DIAGRAM
ENGR:	JJ		SQUARE D Schneider Electric
DATE:	DECEMBER 04, 2006		
DRAWING STATUS:	RECORD	DWG# E21295878-007-07	PG 1 OF 1 REV —

REV	DESCRIPTION	BY	DATE	—	----	--	--/--/--	—	----	--	--/--/--
—	----	--	--/--/--	—	----	--	--/--/--	—	----	--	--/--/--

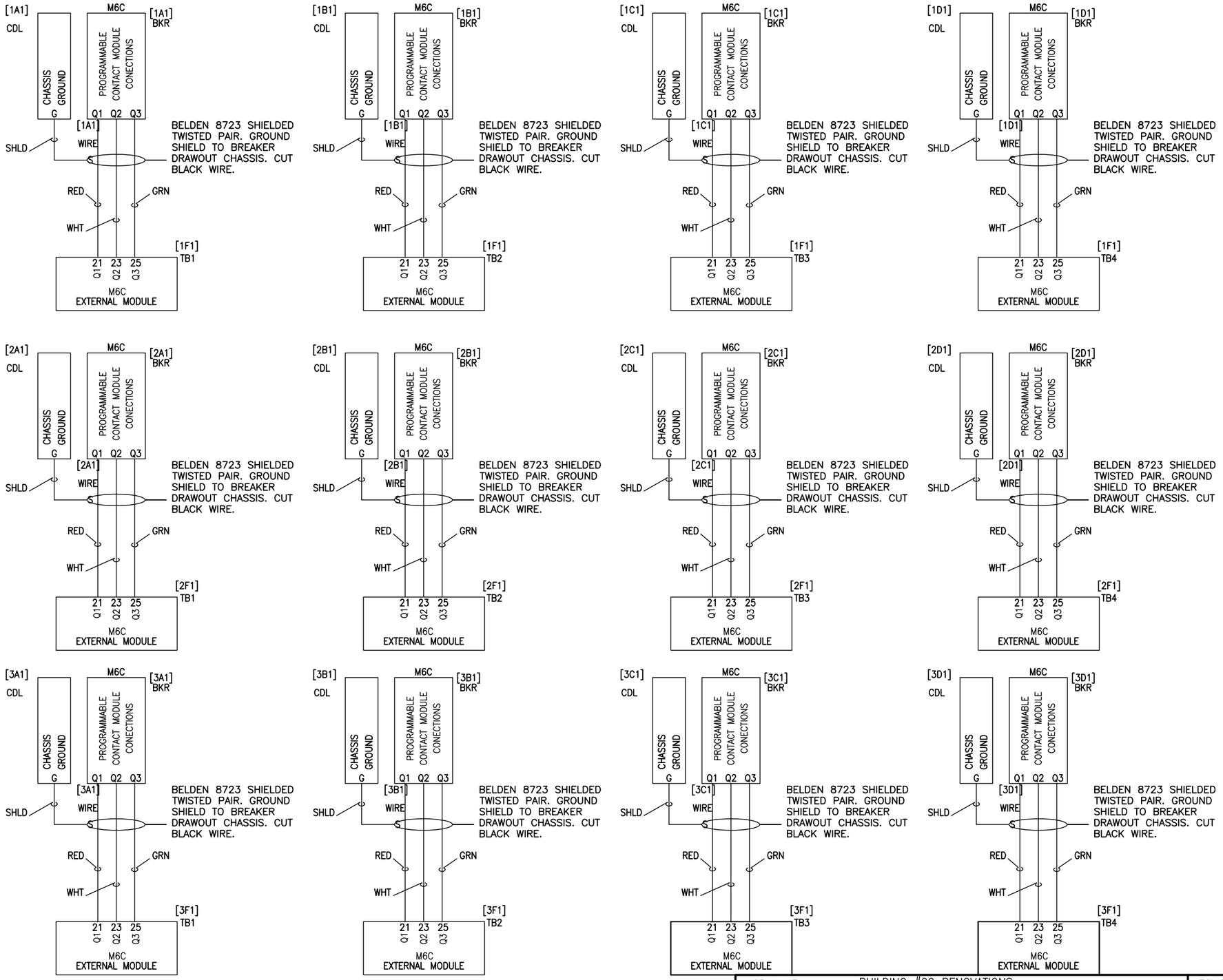

M6C CONNECTIONS TO EXTERNAL MODULE

JOB NAME:	BUILDING #22 RENOVATIONS	EQUIPMENT DESIGNATION:	SEC SWG A & B NEMA 1
JOB LOCATION:	ALBANY, NY	EQUIPMENT TYPE:	PZ4 SWITCHGEAR
DRAWN BY:	J. BROWN	DRAWING TYPE:	ELEMENTARY DIAGRAM
ENGR:	JJ		SQUARE D Schneider Electric
DATE:	DECEMBER 04, 2006		
DRAWING STATUS:	RECORD	DWG# E21295878-007-07	PG 2 OF 3 REV —

REV	DESCRIPTION	BY	DATE	—	----	--	--/--/--	—	----	--	--/--/--
—	----	--	--/--/--	—	----	--	--/--/--	—	----	--	--/--/--

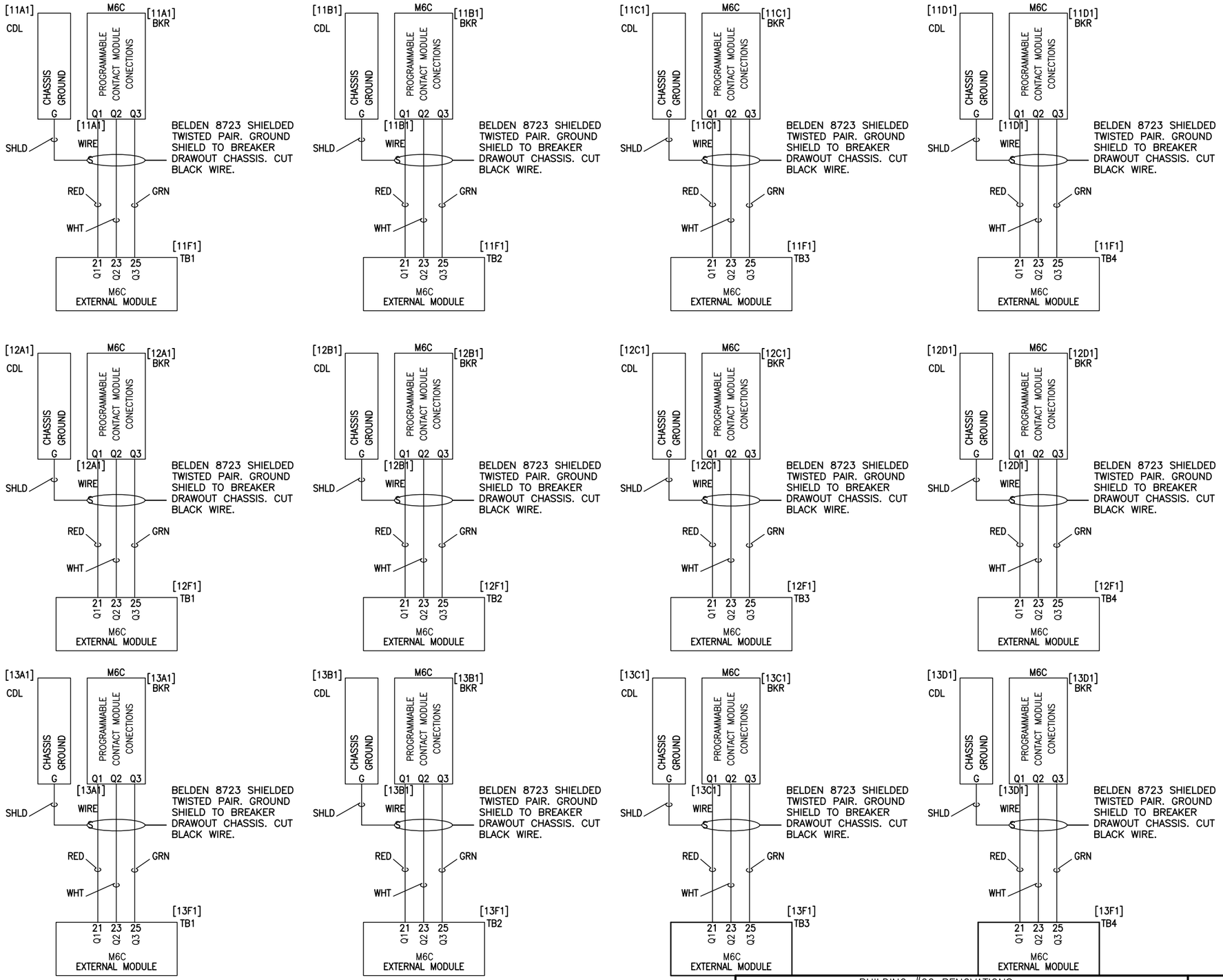

M6C CONNECTIONS TO EXTERNAL MODULE

JOB NAME:	BUILDING #22 RENOVATIONS	EQUIPMENT DESIGNATION:	SEC SWG A & B NEMA 1
JOB LOCATION:	ALBANY, NY	EQUIPMENT TYPE:	PZ4 SWITCHGEAR
DRAWN BY:	J. BROWN	DRAWING TYPE:	ELEMENTARY DIAGRAM
ENGR:	JJ		SQUARE D Schneider Electric
DATE:	DECEMBER 04, 2006		
DRAWING STATUS:	RECORD	DWG# E21295878-007-07	PG 3 OF 3 REV —

REV	DESCRIPTION	BY	DATE						
–	----	--	--/--/--	–	----	--	--/--/--	–	----	--	--/--/--
–	----	--	--/--/--	–	----	--	--/--/--	–	----	--	--/--/--

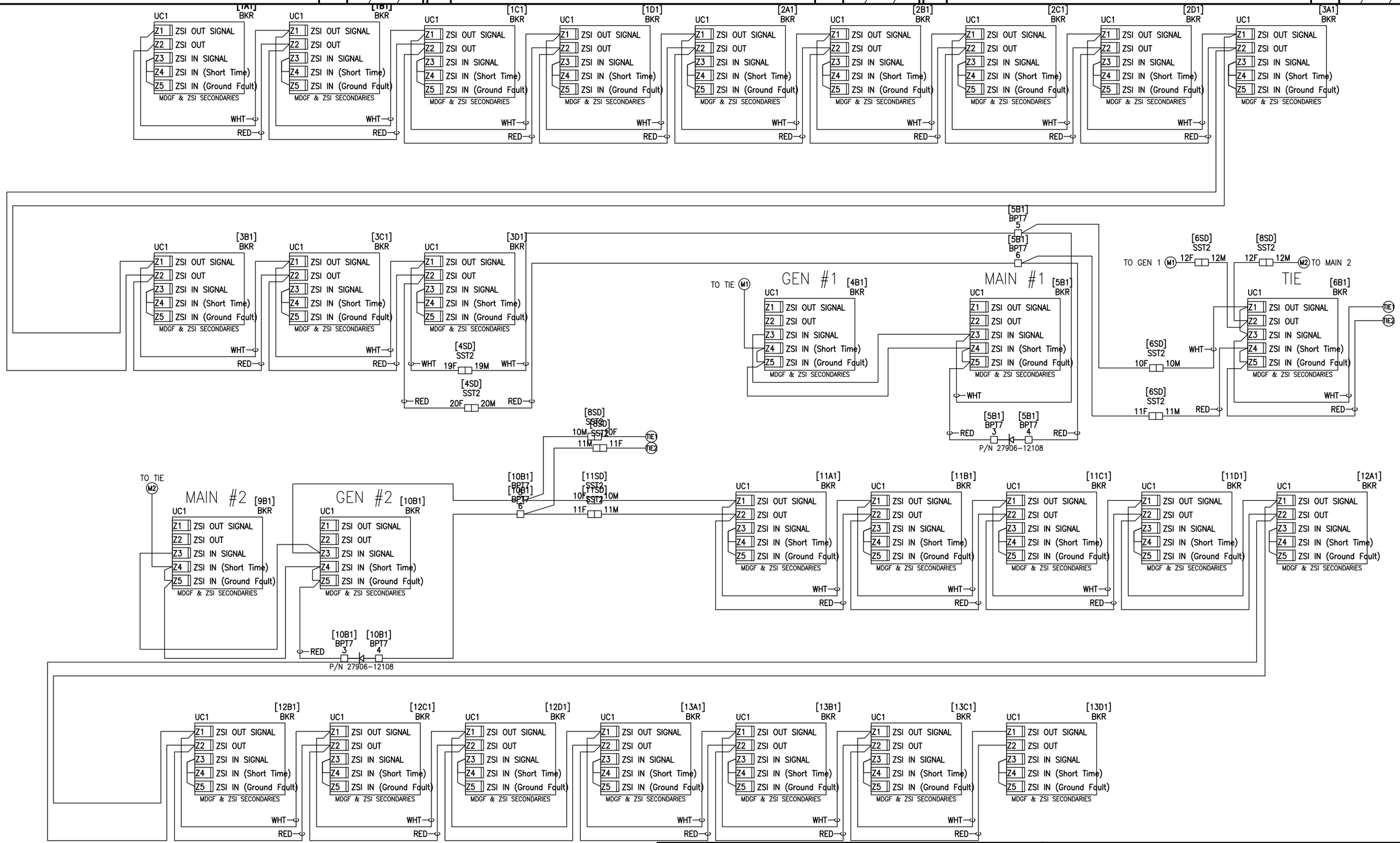

NOTES:
1. ALL WIRING TO BE TYPE "SIS" (UL LISTED)
2. USE #22 AWG (RED, WHITE) TWISTED PAIR UNLESS OTHERWISE NOTED.
3. ROUTE ALL TWISTED PAIR WIRES SEPARATELY THROUGH THE BOTTOM WIREWAY.
4. PER 48041-006-09, RIM42 IS NOT REQUIRED WHEN RESTRAINING LESS THAN 15 UPSTREAM BREAKERS.

ZONE SELECTIVE INTERLOCK (MTM w/o MDGF)

JOB NAME:	BUILDING #22 RENOVATIONS	EQUIPMENT DESIGNATION:	SEC SWG A & B NEMA 1
JOB LOCATION:	ALBANY, NY	EQUIPMENT TYPE:	PZ4 SWITCHGEAR
DRAWN BY:	J. BROWN	DRAWING TYPE:	ELECTRICAL DIAGRAM
ENGR:	JJ		SQUARE D Schneider Electric
DATE:	DECEMBER 04, 2006		
DRAWING STATUS:	RECORD	DWG# E21295878-007-08	PG 1 OF 1 REV –

REV	DESCRIPTION	BY	DATE							
–	----	--	--/--/--	–	----	--	--/--/--	–	----	--	--/--/--
				–	----	--	--/--/--	–	----	--	--/--/--

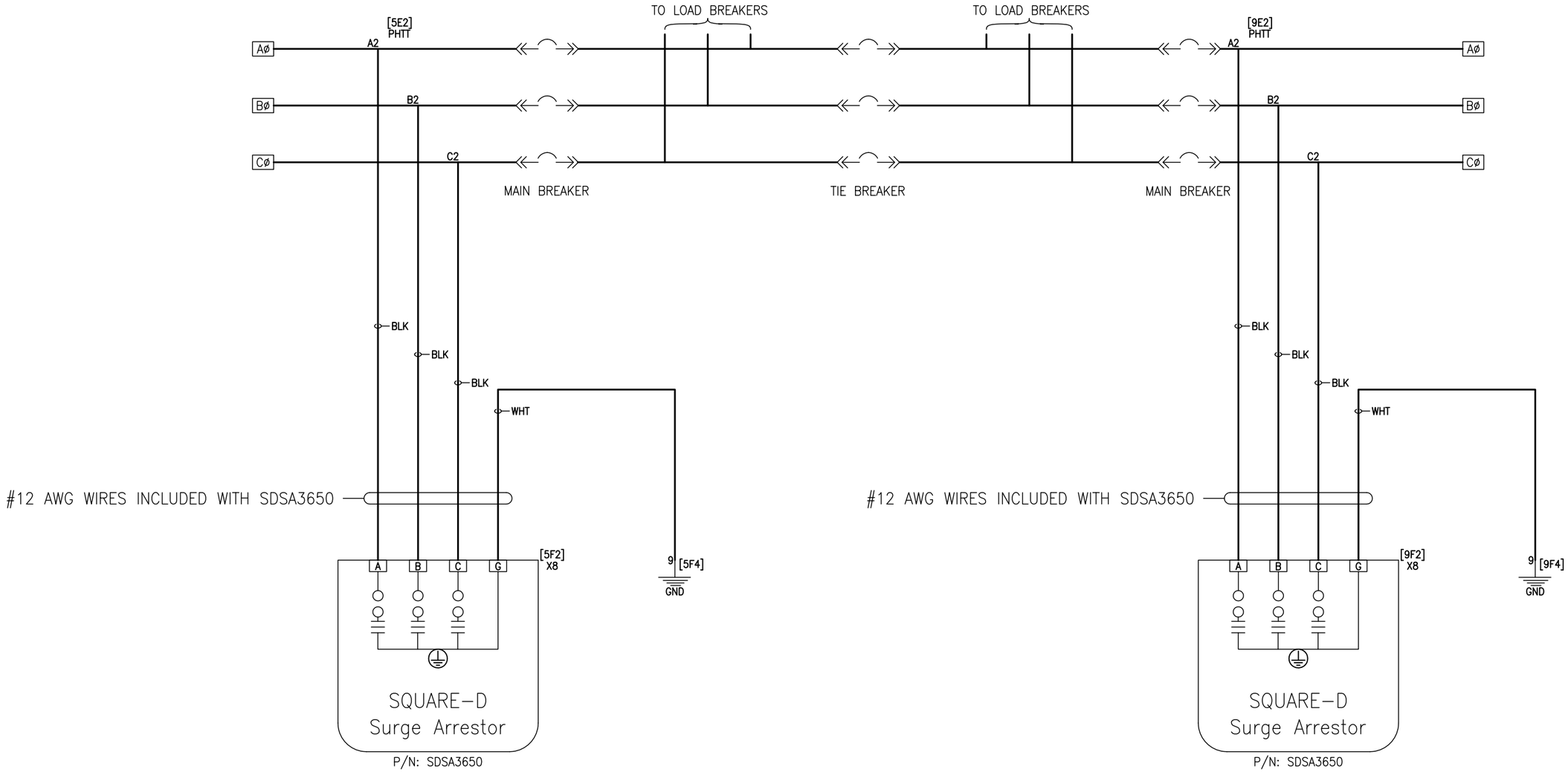

NOTES:
1. ALL WIRING TO BE TYPE "SIS" (UL LISTED)
2. USE #14 AWG WIRE UNLESS OTHERWISE NOTED.

SURGE ARRESTOR (3-WIRE)

JOB NAME:	BUILDING #22 RENOVATIONS	EQUIPMENT DESIGNATION:	SEC SWG A & B NEMA 1
JOB LOCATION:	ALBANY, NY	EQUIPMENT TYPE:	PZ4 SWITCHGEAR
DRAWN BY:	J. BROWN	DRAWING TYPE:	ELECTRICAL DIAGRAM
ENGR:	JJ		SQUARE D Schneider Electric
DATE:	DECEMBER 04, 2006		
DRAWING STATUS:	RECORD	DWG# E21295878-007-08	PG 1 OF 1 REV –

REV	DESCRIPTION	BY	DATE	–	----	--	--/--	–	----	--	--/--
–	----	--	--/--	–	----	--	--/--	–	----	--	--/--

STANDARD LAYOUT FOR TYPICAL FOUR HIGH SWITCHGEAR

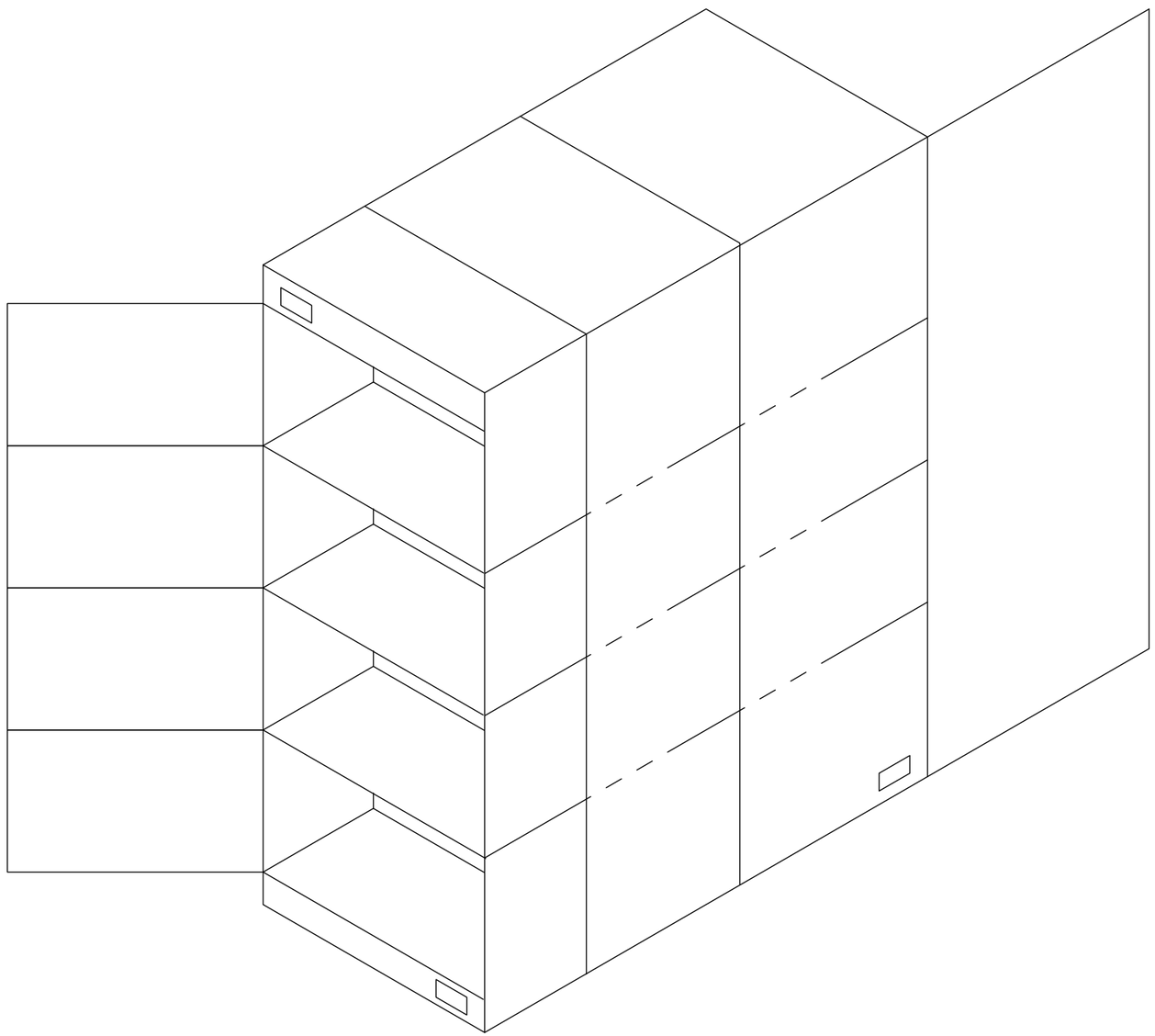

DEVICE LOCATOR DESIGNATIONS

BPz = ANY DEVICE LOCATED ON COMPARTMENT BACK MOUNTING PANEL.
BPTz = TERMINAL BLOCK LOCATED ON COMPARTMENT BACK MOUNTING PANEL.
BKRz = CIRCUIT BREAKER.
Dz = DEVICES LOCATED ON DOOR.
Lz = ANY DEVICE LOCATED ON LEFT SIDE PANEL OF A COMPARTMENT.
LTz = TERMINAL BLOCK LOCATED ON LEFT SIDE PANEL OF A COMPARTMENT.
Rz = ANY DEVICE LOCATED ON RIGHT SIDE PANEL OF A COMPARTMENT.
RTz = TERMINAL BLOCK LOCATED ON RIGHT SIDE PANEL OF A COMPARTMENT.
Tz = ANY DEVICE LOCATED ON TOP PANEL OF A COMPARTMENT.
TTz = TERMINAL BLOCK LOCATED ON TOP PANEL OF A COMPARTMENT.
XTz = TERMINAL BLOCK LOCATED ON BOTTOM PANEL OF A COMPARTMENT.
Xz = ANY DEVICE LOCATED ON BOTTOM PANEL OF A COMPARTMENT.
JTz = ANY DEVICE LOCATED TOP OF THE ROOF.

SPECIAL SPECIFIC DEVICE DESIGNATIONS

SSTz = SHIPPING SPLIT TERMINAL BLOCK.
STz = CURRENT TRANSFOMER SHORTING TERMINAL BLOCK.
xHz = HEATER ELEMENTS
TCHz = THERMOSTATS
GNDz = SECTION GROUND BUS CONNECTION

[XYZ] SECTION/CELL LOCATION

COMPARTMENT OR CELL SUBDIVISION
1–4 = EACH COMPARTMENT OR CELL MAY BE SUBDIVIDED.

SECTION LOCATION = A,B,C,D,E,F
A = TOP CELL
B = SECOND TO TOP CELL
C = SECOND TO BOTTOM CELL
D = BOTTOM CELL
E = BUS COMPARTMENT
F = CABLE COMPARTMENT

SECTION NUMBER
WHEN VIEWING LINE UP FROM THE FRONT, THE LEFT MOST VERTICAL SECTION IS SECTION 1.

[XYZ] SPECIAL SECTION/CELL LOCATION

SPECIAL LOCATION = SA,SD,SF,RD,J1
SA = UPPER WIRE TROUGH
SD = LOWER WIRE TROUGH
SF = REAR LOWER WIRING LOCATION
RD = REAR DOOR
J1 = ROOF

SECTION NUMBER
WHEN VIEWING LINE UP FROM THE FRONT, THE LEFT MOST VERTICAL SECTION IS SECTION 1.

FROM/TO WIRING INFORMATION

1=BKR1–914#16,BRK1–913

CONNECTION ON DEVICE AT OTHER END OF WIRE.
DEVICE AT OTHER END OF WIRE
TERMINAL NUMBER
EXPLANATION
WIRE CONNECTS TO THIS DEVICE, TERMINAL 1. THE OTHER END OF THE WIRE CONNECTS TO DEVICE "BKR1", TERMINAL "914". THE WIRE TYPE IS 16 AWG, SIS. THE WIRE ALSO CONNECTS TO DEVICE "BKR1", TERMINAL 913. WIRE TYPE OF THE SECOND CONNECTION IS TYPE IS 14 AWG, SIS.

10=[1D1]BKR2–Z1#18

EXPLANATION
WIRE CONNECTS TO THIS DEVICE, TERMINAL 10. THE OTHER END OF THE WIRE CONNECTS TO DEVICE "BKR2", IN COMPARTMENT "1D1", TERMINAL "Z1". TYPE IS 18 AWG, SIS.
WIRE AWG
IF NO WIRE SIZE IS GIVEN, WIRE IS 14 AWG, TYPE SIS.
SECTION/CELL LOCATION
IF NO SECTION/CELL LOCATION IS GIVEN, WIRE WILL STAY WITHIN THE CURRENT CELL.

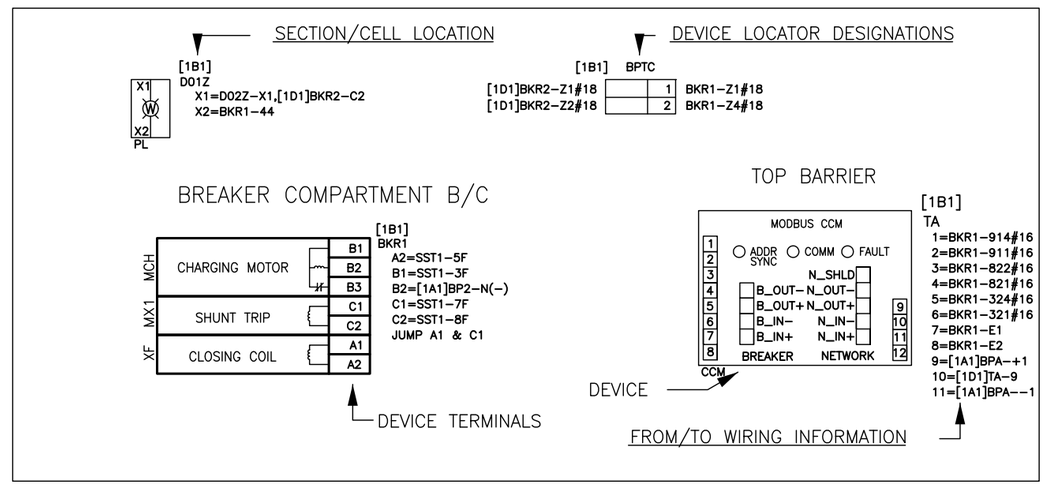

TYPICAL WIRE SLEEVE MARKER

FROM → [1B1]BKRA–F2+
TO → [2D1]BKRD–F2+

NOT TO SCALE

ELEMENTARY & WIRING DIAGRAM LAYOUT INFORMATION

JOB NAME:	BUILDING #22 RENOVATIONS	EQUIPMENT DESIGNATION:	SEC SWG A & B NEMA 1
JOB LOCATION:	ALBANY, NY	EQUIPMENT TYPE:	PZ4 SWITCHGEAR
DRAWN BY:	J. BROWN	DRAWING TYPE:	WIRING DIAGRAM LAYOUT
ENGR:	JJ		SQUARE D Schneider Electric
DATE:	DECEMBER 04, 2006		
DRAWING STATUS:	RECORD	DWG# I21295878–007–01	PG 1 OF 1 REV –

REV	DESCRIPTION	BY	DATE	B	REMOVED CORNER SECTIONS	TT	06/7/06	-	----	--	--/--/--
A	UPDATED DRWG	JM	05/16/06	-	----	--	--/--/--	-	----	--	--/--/--

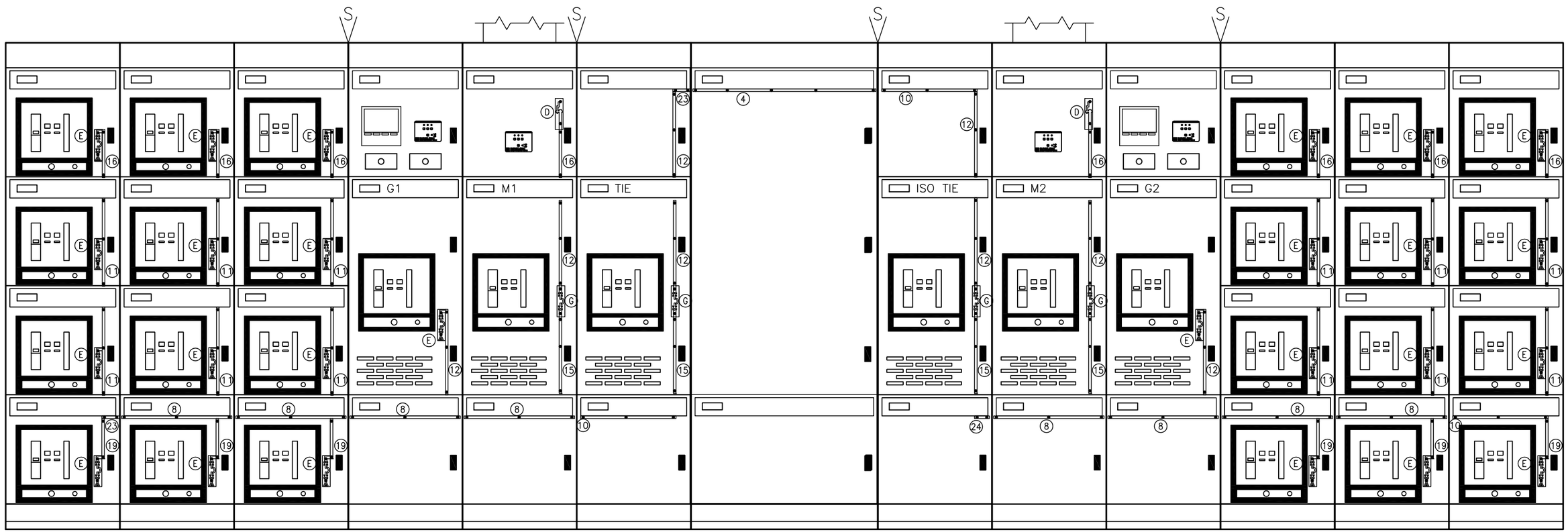

(QUANTITY) BLACK MIMIC BUS PART NUMBERS

MB_A_BG_XFMRLFT
MB_B_BG_XFMRRHT
MB_C_BG_CBL
(2) MB_D_BG_BSWY
MB_E_BG_FDR_CBL
MB_F_BG_FDRBSWY
(2) MB_G_BG_MAIN
MB_H_BG_MNBSBTM
MB_I_BG_MNCBBTM
MB_J_BG_MNCBTOP
MB_K_BG_MNBSTOP
MB_L_BG_FDCBTOP
MB_M_BG_FDBSTOP
MB_N_BG_STAT_SW

MB_CC_BG_24"
MB_26_BG_1-5/8"
MB_25_BG_2"
MB_24_BG_2-7/8"
MB_23_BG_3-3/8"
MB_22_BG_4"
MB_21_BG_4-7/8"
(1) MB_20_BG_7-1/8"
MB_19_BG_7-5/8"
MB_18_BG_7-7/8"
MB_17_BG_8-3/8"
(2) MB_16_BG_9-1/4"
(2) MB_15_BG_14-3/4"
MB_14_BG_15-1/2"

MB_13_BG_15-7/8"
(2) MB_12_BG_16-1/2"
MB_11_BG_17"
MB_10_BG_18-3/8"
MB_9_BG_21"
(2) MB_8_BG_21-1/4"
MB_7_BG_29-1/4"
MB_6_BG_31-3/4"
MB_5_BG_32-3/4"
MB_4_BG_35-1/4"
MB_3_BG_36-1/2"
MB_2_BG_37-1/2"
(1) MB_1_BG_38"

(QUANTITY) BLUE MIMIC BUS PART NUMBERS

(24) MB_E_BU_FDR_CBL
(4) MB_8_BU_21_1/4"
(6) MB_16_BU_9_1/4"
(12) MB_11_BU_17"
(6) MB_19_BU_7_5/8"
(1) MB_23_BU_3_3/8"
(1) MB_10_BU_18-3/8

(QUANTITY) RED MIMIC BUS PART NUMBERS

(2) MB_E_R6_FDR_CBL
(2) MB_G_R6_MAIN
(2) MB_8_RG_21_1/4"
(1) MB_23_RG_3_3/8"
(1) MB_4_RG_35_1/4
(2) MB_10_RG_18_3/8
(4) MB_12_RG_16_1/2
(2) MB_15_RG_14_3/4
(1) MB_24_RG_2_7/8"

BLACK MIMIC BUS - NORMAL POWER
RED MIMIC BUS - EMERGENCY POWER
BLUE MIMIC BUS - LOADS

DUAL DIMENSIONS: INCHES / MILLIMETERS

FRONT ELEVATION

JOB NAME:	BUILDING #22 RENOVATIONS	EQUIPMENT DESIGNATION:	SEC SWG A & B NEMA 1
JOB LOCATION:	ALBANY, NY	EQUIPMENT TYPE:	PZ4 SWITCHGEAR
DRAWN BY:	J. BROWN	DRAWING TYPE:	MIMIC BUS
ENGR:	JJ		SQUARE D Schneider Electric
DATE:	DECEMBER 04, 2006		
DRAWING STATUS:	RECORD	DWG# N21295878-007-01	PG 1 OF 1 REV B

REV	DESCRIPTION	BY	DATE									
A	ADD 24V TO M6C	JJ	02/22/07	–	----	--	--/--/--	–	----	--	--/--/--
				–	----	--	--/--/--	–	----	--	--/--/--

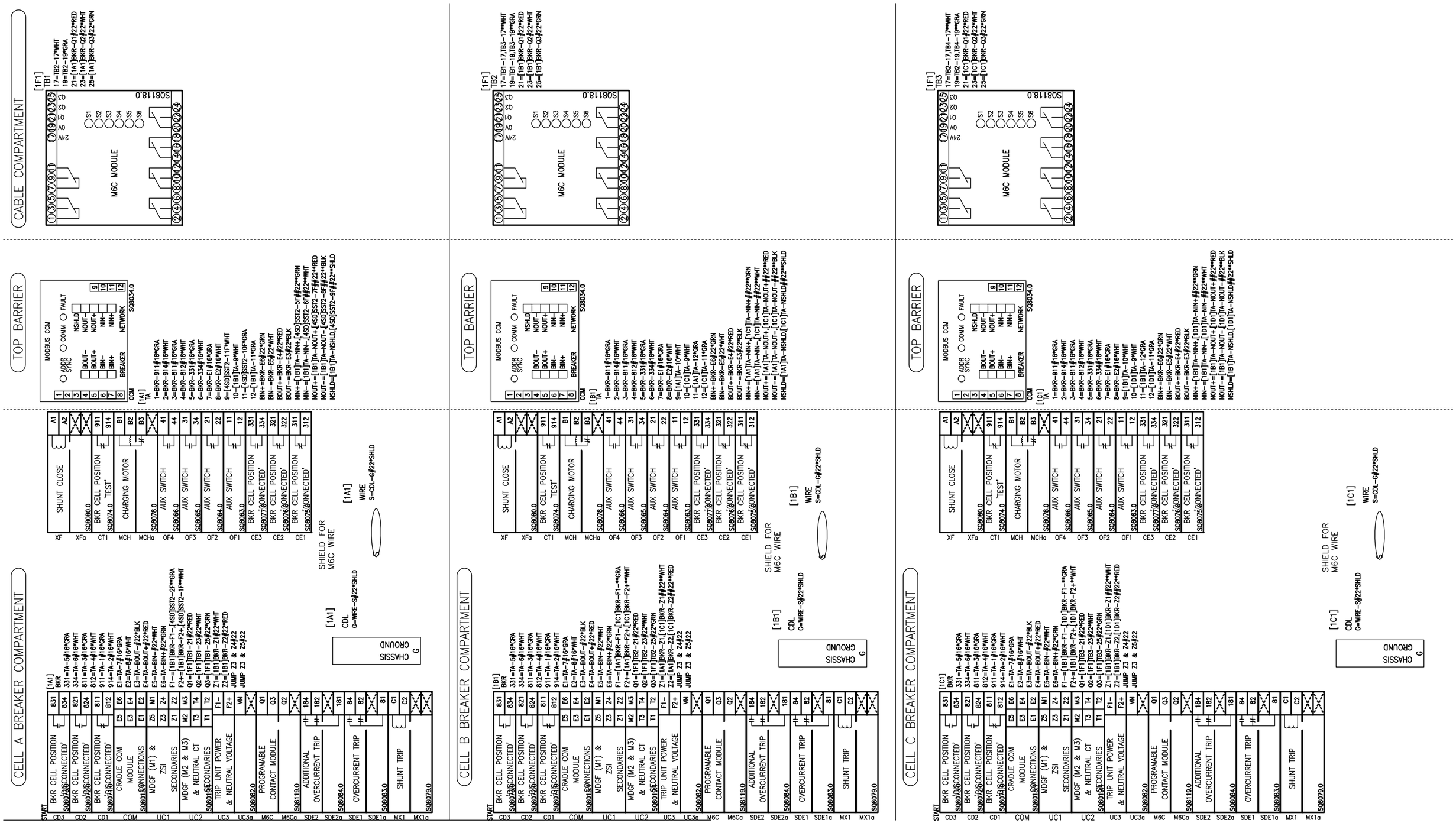

NOTES

1. ALL #22 AWG WIRE WITH A COLOR DESIGNATION (RED, BLK, WHT, GRN) IS 8723 4-CONDUCTOR BELDEN CABLE.
2. ALL WIRE DESIGNATIONS INCLUDING A COLOR (GRA, WHT) PLUS A ONE OR TWO DIGIT NUMBER INDICATE A TWISTED PAIR. FOR EXAMPLE, GRA70 AND WHT70 MAKE UP A SINGLE TWISTED PAIR WIRE.
3. ROUTE ALL BELDEN CABLE AND TWISTED PAIR WIRE IN BOTTOM WIREWAY.

SECTION 1

JOB NAME:	BUILDING #22 RENOVATIONS	EQUIPMENT DESIGNATION:	SEC SWG A & B NEMA 1
JOB LOCATION:	ALBANY, NY	EQUIPMENT TYPE:	PZ4 SWITCHGEAR
DRAWN BY:	J. BROWN	DRAWING TYPE:	WIRING DIAGRAM
ENGR:	JJ		SQUARE D Schneider Electric
DATE:	DECEMBER 04, 2006		
DRAWING STATUS:	RECORD	DWG# W21295878-007-01	PG 1 OF 2 REV A

REV	DESCRIPTION	BY	DATE								
A	ADD 24V TO M6C	JJ	02/22/07	–	----	--	--/--/--	–	----	--	--/--/--

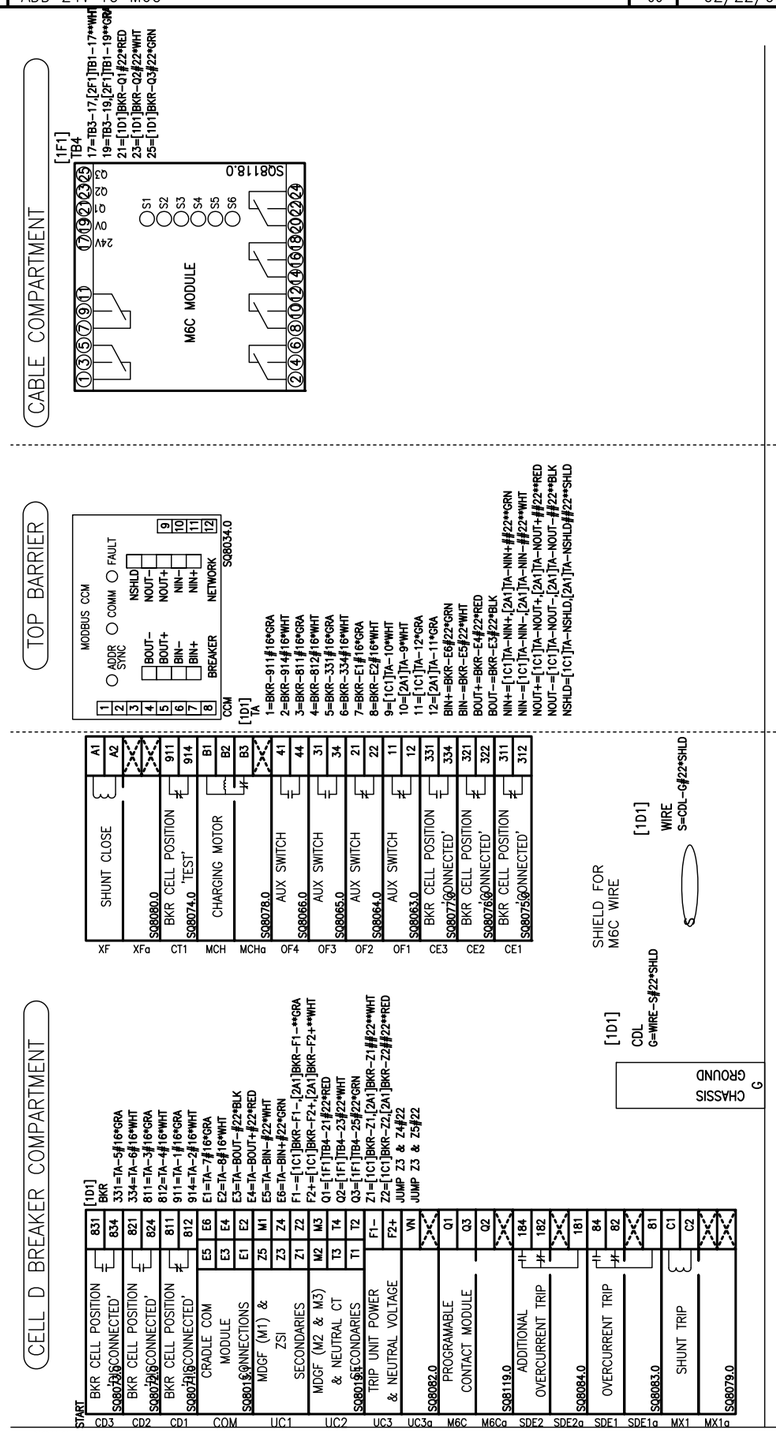

NOTES

1. ALL #22 AWG WIRE WITH A COLOR DESIGNATION (RED, BLK, WHT, GRN) IS 8723 4-CONDUCTOR BELDEN CABLE.
2. ALL WIRE DESIGNATIONS INCLUDING A COLOR (GRA, WHT) PLUS A ONE OR TWO DIGIT NUMBER INDICATE A TWISTED PAIR. FOR EXAMPLE, GRA70 AND WHT70 MAKE UP A SINGLE TWISTED PAIR WIRE.
3. ROUTE ALL BELDEN CABLE AND TWISTED PAIR WIRE IN BOTTOM WIREWAY.

SECTION 1

JOB NAME:	BUILDING #22 RENOVATIONS	EQUIPMENT DESIGNATION:	SEC SWG A & B NEMA 1
JOB LOCATION:	ALBANY, NY	EQUIPMENT TYPE:	PZ4 SWITCHGEAR
DRAWN BY:	J. BROWN	DRAWING TYPE:	WIRING DIAGRAM
ENGR:	JJ		SQUARE D Schneider Electric
DATE:	DECEMBER 04, 2006		
DRAWING STATUS:	RECORD	DWG# W21295878-007-01	PG 2 OF 2 REV A

REV	DESCRIPTION	BY	DATE	–	----	--	--/--/--	–	----	--	--/--/--
A	ADD 24V TO M6C	JJ	02/22/07	–	----	--	--/--/--	–	----	--	--/--/--

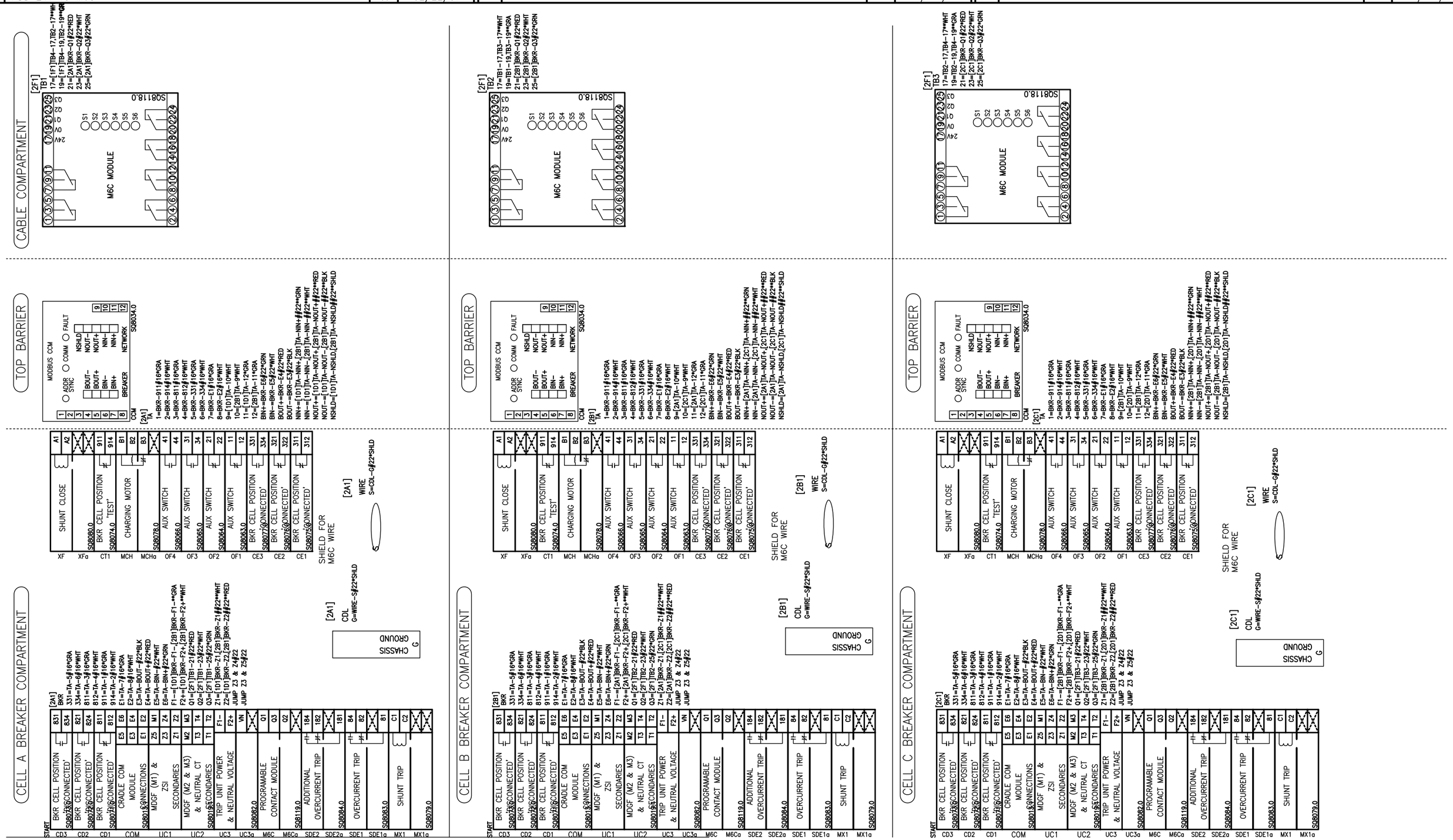

NOTES

1. ALL #22 AWG WIRE WITH A COLOR DESIGNATION (RED, BLK, WHT, GRN) IS 8723 4-CONDUCTOR BELDEN CABLE.
2. ALL WIRE DESIGNATIONS INCLUDING A COLOR (GRA, WHT) PLUS A ONE OR TWO DIGIT NUMBER INDICATE A TWISTED PAIR. FOR EXAMPLE, GRA70 AND WHT70 MAKE UP A SINGLE TWISTED PAIR WIRE.
3. ROUTE ALL BELDEN CABLE AND TWISTED PAIR WIRE IN BOTTOM WIREWAY.

SECTION 2

JOB NAME:	BUILDING #22 RENOVATIONS	EQUIPMENT DESIGNATION:	SEC SWG A & B NEMA 1
JOB LOCATION:	ALBANY, NY	EQUIPMENT TYPE:	PZ4 SWITCHGEAR
DRAWN BY:	J. BROWN	DRAWING TYPE:	WIRING DIAGRAM
ENGR:	JJ		SQUARE D Schneider Electric
DATE:	DECEMBER 04, 2006		
DRAWING STATUS:	RECORD	DWG# W21295878-007-02	PG 1 OF 2 REV A

REV	DESCRIPTION	BY	DATE										
A	ADD 24V TO M6C	JJ	02/22/07	–	----	--	--/--/--	–	----	--	--/--/--
				–	----	--	--/--/--	–	----	--	--/--/--

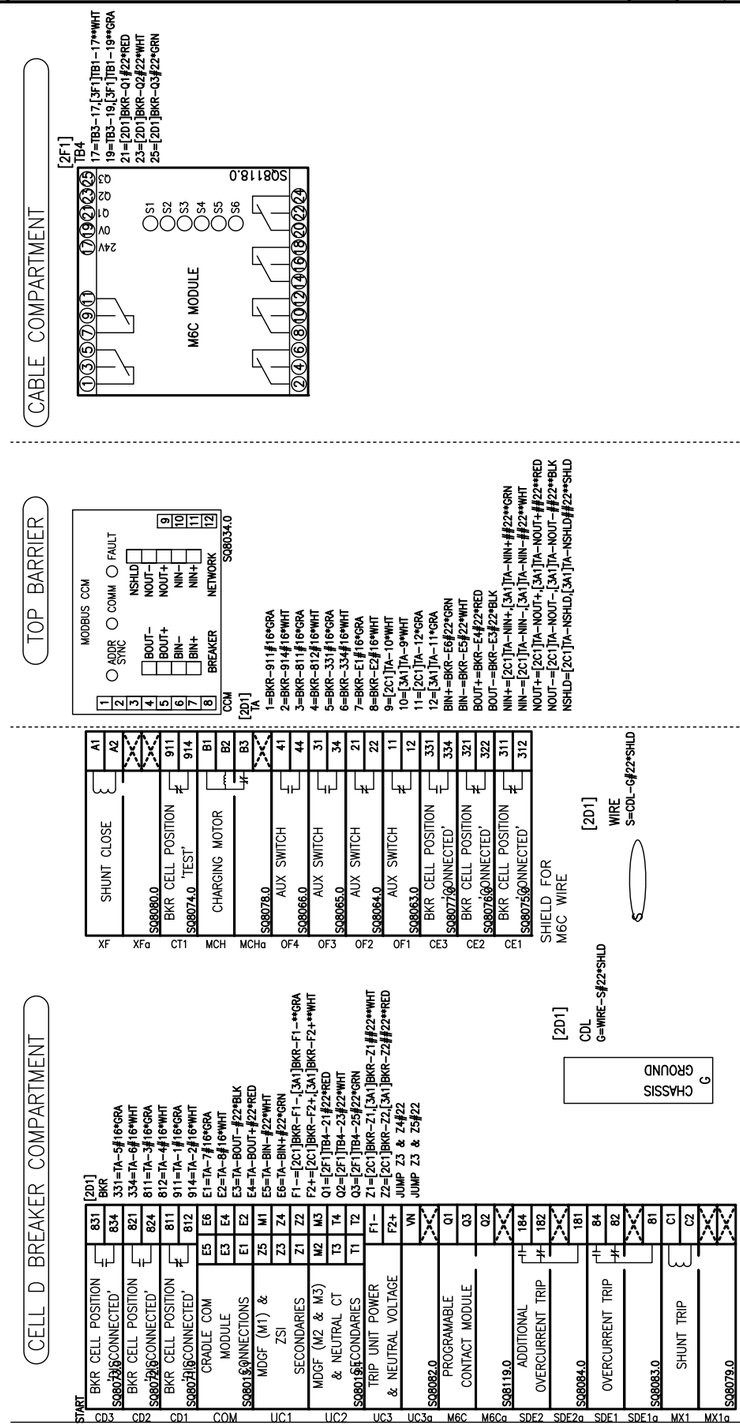

NOTES

1. ALL #22 AWG WIRE WITH A COLOR DESIGNATION (RED, BLK, WHT, GRN) IS 8723 4-CONDUCTOR BELDEN CABLE.
2. ALL WIRE DESIGNATIONS INCLUDING A COLOR (GRA, WHT) PLUS A ONE OR TWO DIGIT NUMBER INDICATE A TWISTED PAIR. FOR EXAMPLE, GRA70 AND WHT70 MAKE UP A SINGLE TWISTED PAIR WIRE.
3. ROUTE ALL BELDEN CABLE AND TWISTED PAIR WIRE IN BOTTOM WIREWAY.

SECTION 2

JOB NAME:	BUILDING #22 RENOVATIONS	EQUIPMENT DESIGNATION:	SEC SWG A & B NEMA 1
JOB LOCATION:	ALBANY, NY	EQUIPMENT TYPE:	PZ4 SWITCHGEAR
DRAWN BY:	J. BROWN	DRAWING TYPE:	WIRING DIAGRAM
ENGR:	JJ		SQUARE D Schneider Electric
DATE:	DECEMBER 04, 2006		
DRAWING STATUS:	RECORD	DWG# W21295878-007-02	PG 2 OF 2 REV A

REV	DESCRIPTION	BY	DATE								
A	ADD 24V TO M6C	JJ	02/22/07	–	----	--	--/--/--	–	----	--	--/--/--

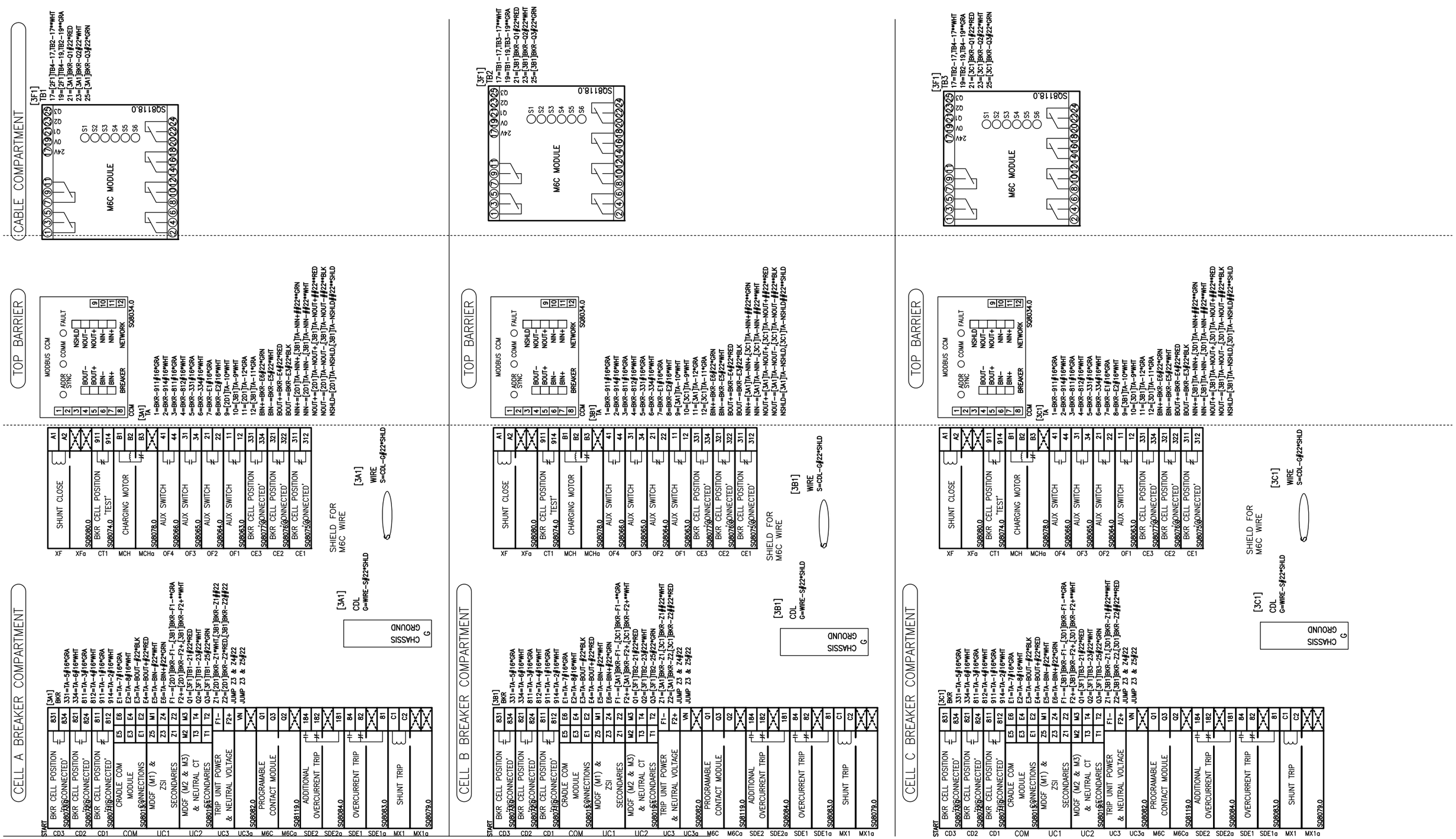

NOTES

1. ALL #22 AWG WIRE WITH A COLOR DESIGNATION (RED, BLK, WHT, GRN) IS 8723 4-CONDUCTOR BELDEN CABLE.
2. ALL WIRE DESIGNATIONS INCLUDING A COLOR (GRA, WHT) PLUS A ONE OR TWO DIGIT NUMBER INDICATE A TWISTED PAIR. FOR EXAMPLE, GRA70 AND WHT70 MAKE UP A SINGLE TWISTED PAIR WIRE.
3. ROUTE ALL BELDEN CABLE AND TWISTED PAIR WIRE IN BOTTOM WIREWAY.

SECTION 3

JOB NAME:	BUILDING #22 RENOVATIONS	EQUIPMENT DESIGNATION:	SEC SWG A & B NEMA 1
JOB LOCATION:	ALBANY, NY	EQUIPMENT TYPE:	PZ4 SWITCHGEAR
DRAWN BY:	J. BROWN	DRAWING TYPE:	WIRING DIAGRAM
ENGR:	JJ		SQUARE D Schneider Electric
DATE:	DECEMBER 04, 2006		
DRAWING STATUS:	RECORD	DWG# W21295878-007-03	PG 1 OF 2 REV A

REV	DESCRIPTION	BY	DATE	–	----	--	--/--/--	–	----	--	--/--/--
A	ADD 24V TO M6C	JJ	02/22/07	–	----	--	--/--/--	–	----	--	--/--/--

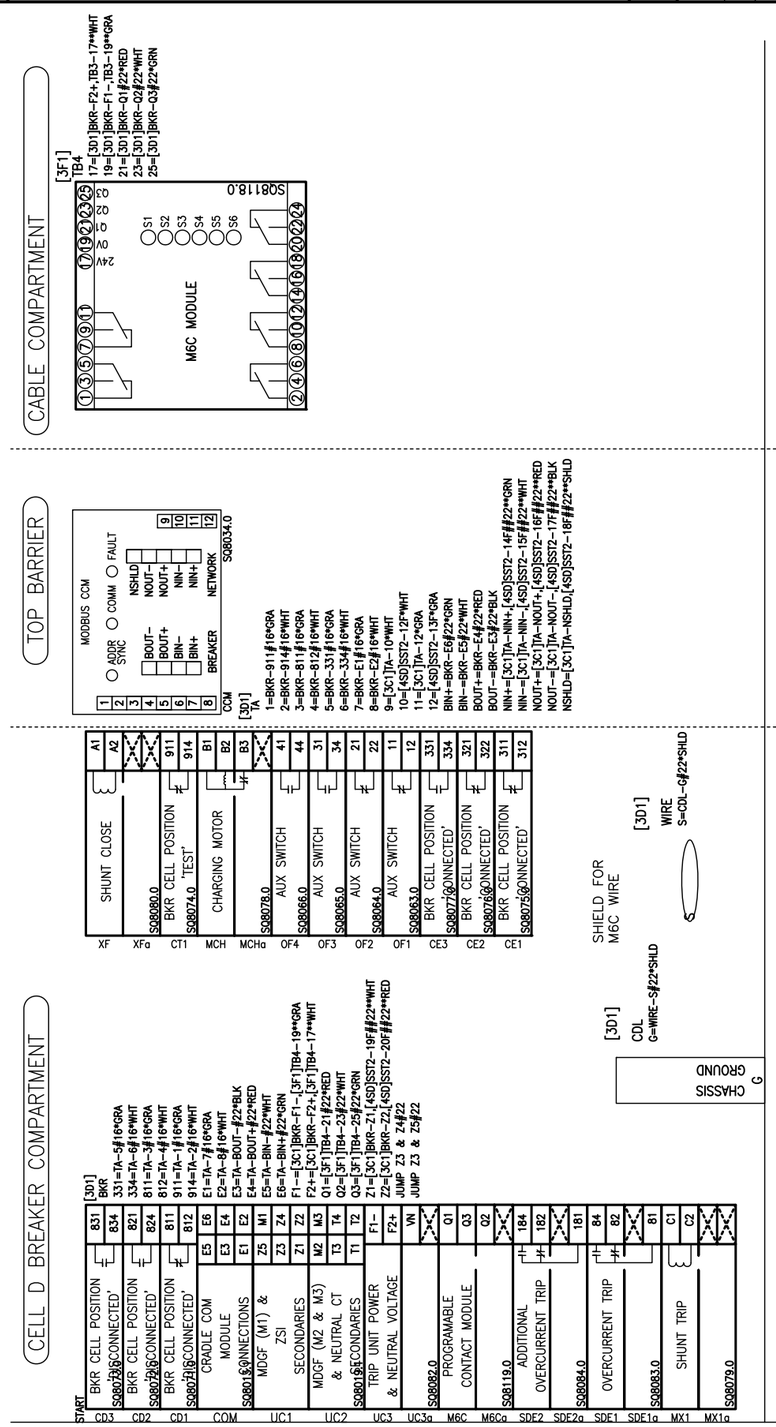

NOTES

1. ALL #22 AWG WIRE WITH A COLOR DESIGNATION (RED, BLK, WHT, GRN) IS 8723 4-CONDUCTOR BELDEN CABLE.
2. ALL WIRE DESIGNATIONS INCLUDING A COLOR (GRA, WHT) PLUS A ONE OR TWO DIGIT NUMBER INDICATE A TWISTED PAIR. FOR EXAMPLE, GRA70 AND WHT70 MAKE UP A SINGLE TWISTED PAIR WIRE.
3. ROUTE ALL BELDEN CABLE AND TWISTED PAIR WIRE IN BOTTOM WIREWAY.

SECTION 3

JOB NAME:	BUILDING #22 RENOVATIONS	EQUIPMENT DESIGNATION:	SEC SWG A & B NEMA 1
JOB LOCATION:	ALBANY, NY	EQUIPMENT TYPE:	PZ4 SWITCHGEAR
DRAWN BY:	J. BROWN	DRAWING TYPE:	WIRING DIAGRAM
ENGR:	JJ		SQUARE D Schneider Electric
DATE:	DECEMBER 04, 2006		
DRAWING STATUS:	RECORD	DWG# W21295878-007-03	PG 2 OF 2 REV A

REV	DESCRIPTION	BY	DATE	B	PHTB	JJ	02/19/07	–	----	--	--/--
A	CHANGE PHLB TO PHTB AND PHTB TO PHLB	JJ	02/12/07	–	----	--	--/--	–	----	--	--/--

CELL A INSTRUMENT COMPARTMENT

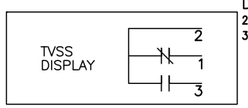

[4A1]
D05K
2=[4SD]SST2-4M*GRA
3=BP52-13

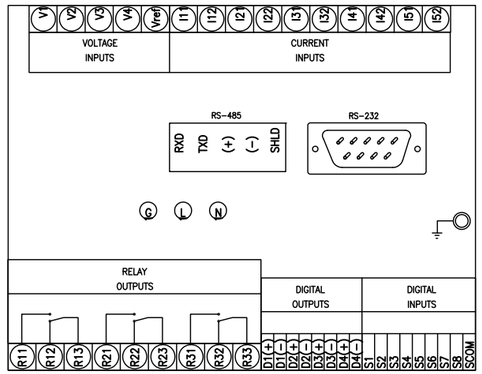

[4A1]
D01K
(+)=BP23-+ (2)#22*RED
(-)=BP23-- (2)#22*BLK
G=[4F4]GND-4#12
I11=D05Z-2
I12=D05Z-8
I21=D05Z-4
I31=D05Z-6
I52=[4F4]GND-5#12
L=[6SA]SST1-6F
N=[6SA]SST1-5F
SHLD=BP23-SHLD (2)#22*SHLD
V1=D04Z-2
V2=D04Z-4
V3=D04Z-6
JUMP I12 & I22
JUMP I22 & I32
JUMP I32 & I41
JUMP I41 & I42
JUMP I42 & I51
JUMP I51 & I52
JUMP V2 & V4
JUMP V4 & Vref

TEST BLOCK
P/N: 6422120G3
GM0027 P/N: 6129533G1
AMPS – XMER

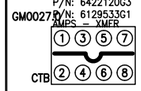

[4A1]
D05Z
1=[4B1]STA-1A
2=D01K-I11
3=[4B1]STA-3A
4=D01K-I21
5=[4B1]STA-5A
6=D01K-I31
7=[4B1]STA-6A
8=D01K-I12

TEST BLOCK
P/N: 6422120G3
GM0027 P/N: 6129533G1
VOLTS

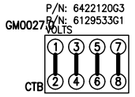

[4A1]
D04Z
1=X21-X1
2=D01K-V1
3=X21-X2
4=D01K-V2
5=X22-X2
6=D01K-V3

DOOR

CR8006.0

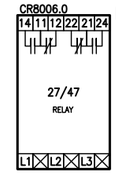

[4A1]
BP1
11=BP2-24
14=[4B1]TB-5
L1=BP2-L1,X1-2
L2=BP3-L2,X1-4
L3=BP2-L2,X1-6

27/47
CONTROL RELAY
CROMPTON
P/N:
252PSGUSEBXC6EB

CR8001.0

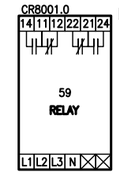

[4A1]
BP3
11=[6SA]SST1-27F
14=BP2-11
L1=BP2-L1
L2=BP1-L2
L3=BP2-L2

81 O/U
CONTROL RELAY
CROMPTON
P/N:
253PHDUSEBXC6EE

CR8002.0

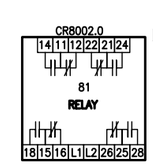

[4A1]
BP2
11=BP3-14
24=BP1-11
L1=BP1-L1,BP3-L1
L2=BP1-L3,BP3-L3
JUMP 14 & 21

59
CONTROL RELAY
CROMPTON
P/N:
252PVAUSEBXC6EB

[4A1]
BP23

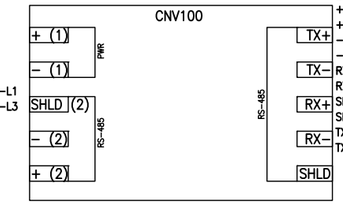

+ (1)=BPTCN1-6
+ (2)=D01K-(+)#22*RED
– (1)=BPTCN1-7*WHT
– (2)=D01K-(–)#22*BLK
RX+=BPTCN1-3#22
RX–=BPTCN1-4#22*SHLD
SHLD=BPTCN1-5#22
SHLD (2)=D01K-SHLD#22*SHLD
TX+=BPTCN1-1#22
TX–=BPTCN1-2#22

8 7 6 5
4 3 2 1
ICECUBE
RELAY
14 13
12 11 10 9
SQ8041.0

[4A1]
BP52
5=[6SA]SST1-31F
9=[5A1]BP52-9,[6SA]SST1-32F
13=D05K-3
14=[4SD]SST2-3M*WHT

4PDT 5A RELAY
P/N: 8501NR45,
8501RSD14P14V53,
8501NH45

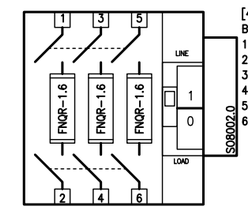

[4A1]
BP20
1=[4E3]PHTB-A1
2=X21-H1
3=[4E3]PHTB-B1
4=X21-H2
5=[4E3]PHTB-C1
6=X22-H2

TELEMECHANIQUE
GS1EERU30
30A CC 3 POLE

[4A1] SQ8005.1
RTA

1	2	3	4	5
[4SD]SST2-5M#22*GRN	[4SD]SST2-6M#22*WHT	[4SD]SST2-7M#22*RED	[4SD]SST2-8M#22*BLK	[4SD]SST2-9M#22*SHLD

[4A1] SQ8005.1
BPTCN1

1	[4B1]TA-NIN+,[4SD]SST2-14M#22*GRN
2	[4B1]TA-NIN–,[4SD]SST2-15M#22*WHT
3	[4B1]TA-NOUT+,[4SD]SST2-16M#22*RED
4	[4B1]TA-NOUT–,[4SD]SST2-17M#22*BLK
5	[4B1]TA-NSHLD,[4SD]SST2-18M#22*SHLD
6	[4B1]TA-9,[4SD]SST2-12M**WHT
7	[4B1]TA-11,[4SD]SST2-13M**GRA

BP23-TX+#22
BP23-TX–#22
BP23-RX+#22
BP23-RX–#22*SHLD
BP23-SHLD#22
BP23-+ (1)
BP23-– (1)*WHT

BACK PAN

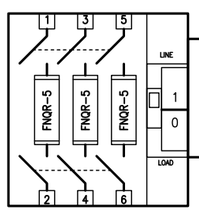

[4A1]
X1
1=[4F3]PHLB-A1
2=BP1-L1
3=[4F3]PHLB-B1
4=BP1-L2
5=[4F3]PHLB-C1
6=BP1-L3

TELEMECHANIQUE
GS1EERU30
30A CC 3 POLE

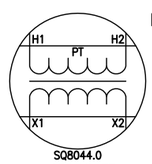

[4A1]
X21
H1=BP20-2
H2=BP20-4,X22-H1
X1=D04Z-1
X2=X22-X1#12,D04Z-3

SQ8044.0
150 VA PT
480–120 VAC
POTENTIAL
TRANSFORMER
P/N: 460R-480

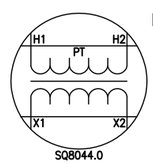

[4A1]
X22
H1=X21-H2
H2=BP20-6
X1=X21-X2,[4F4]GND-9##12
X2=D04Z-5

SQ8044.0
150 VA PT
480–120 VAC
POTENTIAL
TRANSFORMER
P/N: 460R-480

BOTTOM PAN

NOTES:
A ALL COMPONENTS ARE PROVIDED IN MAIN BREAKER CONTROL POWER ASSEMBLY 80330-033-51 UNLESS OTHERWISE NOTED.
B PROVIDED IN CLOSED TRANSFER OPTION ASSEMBLY 80330-046-51.
C PROVIDED IN CLOSED TRANSFER RELAY ASSEMBLY 80330-046-52.

SECTION 4

JOB NAME:	BUILDING #22 RENOVATIONS	EQUIPMENT DESIGNATION:	SEC SWG A & B NEMA 1
JOB LOCATION:	ALBANY, NY	EQUIPMENT TYPE:	PZ4 SWITCHGEAR
DRAWN BY:	J. JEFFCOAT	DRAWING TYPE:	WIRING DIAGRAM
ENGR:	JJ		SQUARE D Schneider Electric
DATE:	DECEMBER 04, 2006		
DRAWING STATUS:	RECORD	DWG# W21295878-007-04	PG 1 OF 3 REV B

REV	DESCRIPTION	BY	DATE							
A	REVISED TVSS WIRING	TT	02/07/07	B	CHANGE PHLB TO PHTB AND PHTB TO PHLB	JJ	02/12/07	–	----	--/--
				C	PHTB	JJ	02/19/07	–	----	--/--

CELL A INSTRUMENT COMPARTMENT

SEE SHEET 1 FOR WIRING

CELL BC BREAKER COMPARTMENT

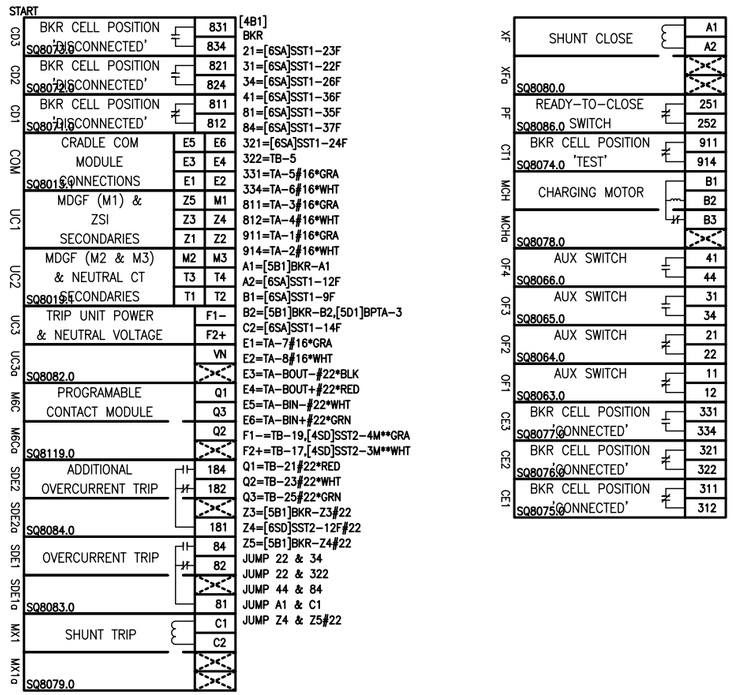

[4B1]
BKR
21=[6SA]SST1-23F
31=[6SA]SST1-22F
34=[6SA]SST1-26F
41=[6SA]SST1-36F
81=[6SA]SST1-35F
84=[6SA]SST1-37F
321=[6SA]SST1-24F
322=TB-5
331=TA-5#16*GRA
334=TA-6#16*WHT
811=TA-3#16*GRA
812=TA-4#16*WHT
911=TA-1#16*GRA
914=TA-2#16*WHT
A1=[5B1]BKR-A1
A2=[6SA]SST1-12F
B1=[6SA]SST1-9F
B2=[5B1]BKR-B2,[5D1]BPTA-3
C2=[6SA]SST1-14F
E1=TA-7#16*GRA
E2=TA-8#16*WHT
E3=TA-BOUT-#22*BLK
E4=TA-BOUT+#22*RED
E5=TA-BIN-#22*WHT
E6=TA-BIN+#22*GRN
F1-=TB-19,[4SD]SST2-4M**GRA
F2+=TB-17,[4SD]SST2-3M**WHT
Q1=TB-21#22*RED
Q2=TB-23#22*WHT
Q3=TB-25#22*GRN
Z3=[5B1]BKR-Z3#22
Z4=[6SD]SST2-12F#22
Z5=[5B1]BKR-Z4#22
JUMP 22 & 34
JUMP 22 & 322
JUMP 44 & 84
JUMP A1 & C1
JUMP Z4 & Z5#22

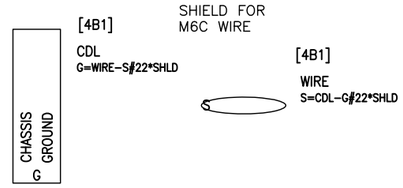

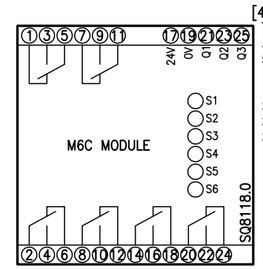

[4B1]
TB
3=[6SA]SST1-25F
5=[4A1]BP1-14,BKR-322
17=BKR-F2+,[5B1]BKR-F2+**WHT
19=BKR-F1-,[5B1]BKR-F1-**GRA
21=BKR-Q1#22*RED
23=BKR-Q2#22*WHT
25=BKR-Q3#22*GRN

CELL D INSTRUMENT COMPARTMENT

SEE SHEET 3 FOR WIRING

TOP BARRIER

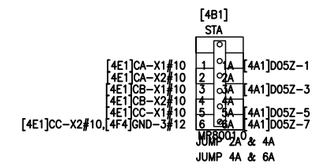

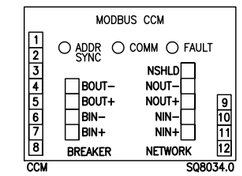

[4B1]
TA
1=BKR-911#16*GRA
2=BKR-914#16*WHT
3=BKR-811#16*GRA
4=BKR-812#16*WHT
5=BKR-331#16*GRA
6=BKR-334#16*WHT
7=BKR-E1#16*GRA
8=BKR-E2#16*WHT
9=[4A1]BPTCN1-6*WHT
10=[5B1]TA-9*WHT
11=[4A1]BPTCN1-7*GRA
12=[5B1]TA-11*GRA
BIN+=BKR-E6#22*GRN
BIN-=BKR-E5#22*WHT
BOUT+=BKR-E4#22*RED
BOUT-=BKR-E3#22*BLK
NIN+=[4A1]BPTCN1-1,[5B1]TA-NIN+##22**GRN
NIN-=[4A1]BPTCN1-2,[5B1]TA-NIN-##22**WHT
NOUT+=[4A1]BPTCN1-3,[5B1]TA-NOUT+##22**RED
NOUT-=[4A1]BPTCN1-4,[5B1]TA-NOUT-##22**BLK
NSHLD=[4A1]BPTCN1-5,[5B1]TA-NSHLD##22**SHLD

METERING CT'S
3200 : 5

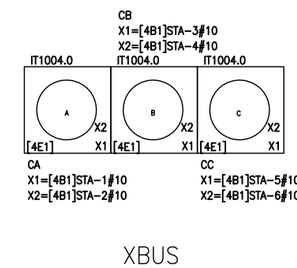

XBUS

PHASE, NEUTRAL, AND GND CONDUCTORS MUST BE TWISTED TOGETHER WITH A WIRE LENGTH LESS THAN 8 FT.

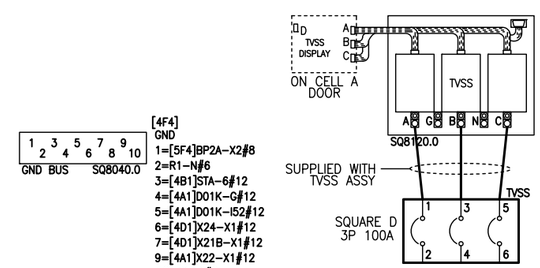

[4F4]
GND
1=[5F4]BP2A-X2#8
2=R1-N#6
3=[4B1]STA-6#12
4=[4A1]D01K-G#12
5=[4A1]D01K-I52#12
6=[4D1]X24-X1#12
7=[4D1]X21B-X1#12
9=[4A1]X22-X1#12
10=R1-G#6

[4F4]
R1
2=[4E3]PHTB-A2#6*GRA/BRN
4=[4E3]PHTB-B2#6*GRA/ORN
6=[4E3]PHTB-C2#6*GRA/YEL
G=GND-10#6
N=GND-2#6

BUS / CABLE COMPARTMENT

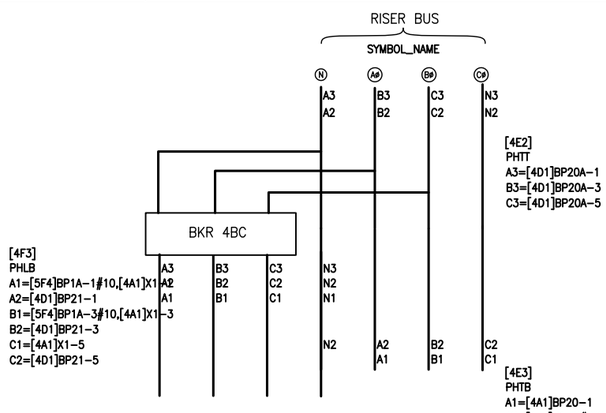

[4E2]
PHTT
A3=[4D1]BP20A-1
B3=[4D1]BP20A-3
C3=[4D1]BP20A-5

[4F3]
PHLB
A1=[5F4]BP1A-1#10,[4A1]X1-1
A2=[4D1]BP21-1
B1=[5F4]BP1A-3#10,[4A1]X1-3
B2=[4D1]BP21-3
C1=[4A1]X1-5
C2=[4D1]BP21-5

[4E3]
PHTB
A1=[4A1]BP20-1
A2=[4F4]R1-2#6*GRA/BRN
B1=[4A1]BP20-3
B2=[4F4]R1-4#6*GRA/ORN
C1=[4A1]BP20-5
C2=[4F4]R1-6#6*GRA/YEL

NOTES:
1. ALL #22 AWG WIRE WITH A COLOR DESIGNATION (RED, BLK, WHT, GRN) IS 8723 4-CONDUCTOR BELDEN CABLE.
2. ALL WIRE DESIGNATIONS INCLUDING A COLOR (GRA, WHT) PLUS A ONE OR TWO DIGIT NUMBER INDICATE A TWISTED PAIR WIRE.
3. ROUTE ALL BELDEN CABLE AND TWISTED PAIR WIRE IN BOTTOM WIREWAY.

SECTION 4

JOB NAME:	BUILDING #22 RENOVATIONS	EQUIPMENT DESIGNATION:	SEC SWG A & B NEMA 1
JOB LOCATION:	ALBANY, NY	EQUIPMENT TYPE:	PZ4 SWITCHGEAR
DRAWN BY:	J. JEFFCOAT	DRAWING TYPE:	WIRING DIAGRAM
ENGR:	JJ		SQUARE D Schneider Electric
DATE:	DECEMBER 04, 2006		
DRAWING STATUS:	RECORD	DWG# W21295878-007-04	PG 2 OF 3 REV C

REV	DESCRIPTION	BY	DATE	–	----	--	--/--	–	----	--	--/--
A	CHANGE PHLB TO PHTB AND PHTB TO PHLB	JJ	02/12/07	–	----	--	--/--	–	----	--	--/--

CELL D INSTRUMENT COMPARTMENT

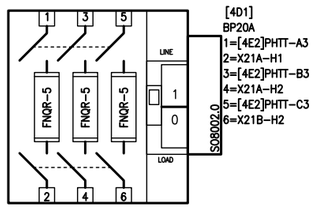

TELEMECHANIQUE
GS1EERU30
30A CC 3 POLE

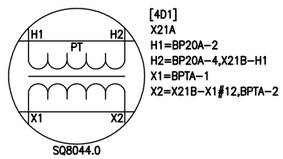

SQ8044.0
150 VA PT
480-120 VAC
POTENTIAL
TRANSFORMER
P/N: 460R-480

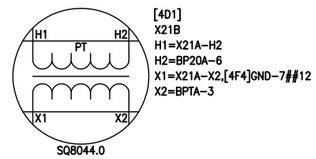

SQ8044.0
150 VA PT
480-120 VAC
POTENTIAL
TRANSFORMER
P/N: 460R-480

[4D1] SQ8005.1
BPTA

X21A-X1	1
X21A-X2	2
X21B-X2	3
X23-X1	4
X23-X2	5
X24-X2	6

PULL APART SHIPPING SPLIT TERMINALS

BOTTOM WIREWAY

[4SD]BS8002.1
SST2

[5A1]BP2-+ 1*WHT	1M	1F	[1A1]BKR-F2+*WHT
[5A1]BP2-- 1*GRA	2M	2F	[1A1]BKR-F1-*GRA
[4A1]BP52-14,[4B1]BKR-F2+**WHT	3M	3F	
[4A1]D05K-2,[4B1]BKR-F1-**GRA	4M	4F	
[4A1]RTA-1#22*GRN	5M	5F	[1A1]TA-NIN+#22*GRN
[4A1]RTA-2#22*WHT	6M	6F	[1A1]TA-NIN-#22*WHT
[4A1]RTA-3#22*RED	7M	7F	[1A1]TA-NOUT+#22*RED
[4A1]RTA-4#22*BLK	8M	8F	[1A1]TA-NOUT-#22*BLK
[4A1]RTA-5#22*SHLD	9M	9F	[1A1]TA-NSHLD#22*SHLD
[5A1]BP3-(-)	10M	10F	[1A1]TA-11*GRA
[5A1]BP3-(+)	11M	11F	[1A1]TA-9*WHT
[4A1]BPTCN1-6*WHT	12M	12F	[3D1]TA-10*WHT
[4A1]BPTCN1-7*GRA	13M	13F	[3D1]TA-12*GRA
[4A1]BPTCN1-1#22*GRN	14M	14F	[3D1]TA-NIN+#22*GRN
[4A1]BPTCN1-2#22*WHT	15M	15F	[3D1]TA-NIN-#22*WHT
[4A1]BPTCN1-3#22*RED	16M	16F	[3D1]TA-NOUT+#22*RED
[4A1]BPTCN1-4#22*BLK	17M	17F	[3D1]TA-NOUT-#22*BLK
[4A1]BPTCN1-5#22*SHLD	18M	18F	[3D1]TA-NSHLD#22*SHLD
[5B1]BPT7-5#22*WHT	19M	19F	[3D1]BKR-Z1#22*WHT
[5B1]BPT7-6#22*RED	20M	20F	[3D1]BKR-Z2#22*RED
	21M	21F	
	22M	22F	
	23M	23F	
	24M	24F	
	25M	25F	
	26M	26F	
	27M	27F	
	28M	28F	
	29M	29F	
	30M	30F	
	31M	31F	
	32M	32F	
	33M	33F	
	34M	34F	
	35M	35F	
	36M	36F	
	37M	37F	
	38M	38F	
	39M	39F	
	40M	40F	

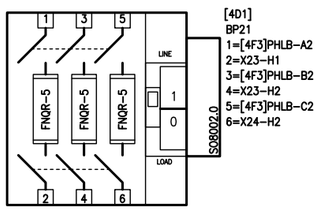

TELEMECHANIQUE
GS1EERU30
30A CC 3 POLE

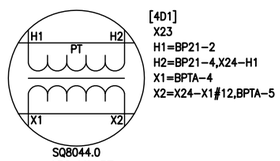

SQ8044.0
150 VA PT
480-120 VAC
POTENTIAL
TRANSFORMER
P/N: 460R-480

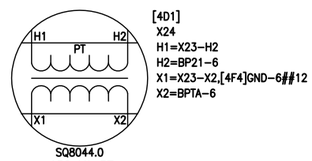

SQ8044.0
150 VA PT
480-120 VAC
POTENTIAL
TRANSFORMER
P/N: 460R-480

NOTES:
A. ALL COMPONENTS ARE PROVIDED IN MAIN BREAKER CONTROL POWER ASSEMBLY 80330-033-51 UNLESS OTHERWISE NOTED.
B. PROVIDED IN CLOSED TRANSFER OPTION ASSEMBLY 80330-046-51.
C. PROVIDED IN CLOSED TRANSFER RELAY ASSEMBLY 80330-046-52.

SECTION 4

JOB NAME:	BUILDING #22 RENOVATIONS	EQUIPMENT DESIGNATION:	SEC SWG A & B NEMA 1
JOB LOCATION:	ALBANY, NY	EQUIPMENT TYPE:	PZ4 SWITCHGEAR
DRAWN BY:	J. JEFFCOAT	DRAWING TYPE:	WIRING DIAGRAM
ENGR:	JJ		SQUARE D Schneider Electric
DATE:	DECEMBER 04, 2006		
DRAWING STATUS:	RECORD	DWG# W21295878-007-04	PG 3 OF 3 REV A

REV	DESCRIPTION	BY	DATE								
A	ADD 24V TO M6C	JJ	02/22/07	–	----	--	--/--	–	----	--	--/--

CELL A INSTRUMENT COMPARTMENT

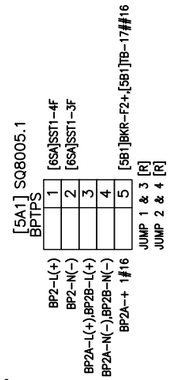

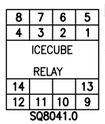

[5A1]
BP52
5=[6SA]SST1-30F
9=[4A1]BP52-9,[5D1]BP50-9
13=D05K-3
14=[6SD]SST2-1F*WHT

4PDT 5A RELAY
P/N: 8501NR45,
8501RSD14P14V53,
8501NH45

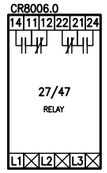

[5A1]
BP1
11=[6SA]SST1-20F
14=[5B1]TB-5,[6SA]SST1-21F
L1=X1-2
L2=X1-4
L3=X1-6

27/47
CONTROL RELAY
CROMPTON
P/N:
252PSGUSEBXC6EB

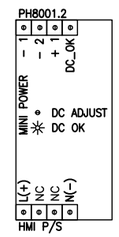

[5A1]
BP2A
+ 1=BPTPS-5#16
– 1=[5B1]BKR-F1-#16
– 2=[5B1]TB-19#16
L(+)=BPTPS-3
N(-)=BPTPS-4

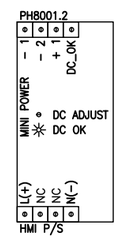

[5A1]
BP2B
+ 1=[6SD]SST2-13F
– 1=[6SD]SST2-14F
L(+)=BPTPS-3
N(-)=BPTPS-4

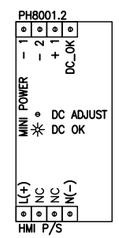

[5A1]
BP2
+ 1=[4SD]SST2-1M*WHT
– 1=[4SD]SST2-2M*GRA
L(+)=BPTPS-1
N(-)=BPTPS-2

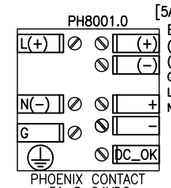

[5A1]
BP3
(+)=[4SD]SST2-11M
(–)=[4SD]SST2-10M
G=[5F4]GND-8
L(+)=[6SA]SST1-8F
N(-)=[6SA]SST1-7F

PHOENIX CONTACT
5A @ 24VDC
P/N: 2938581

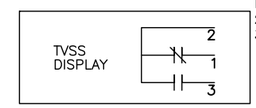

[5A1]
D05K
2=[6SD]SST2-2F*GRA
3=BP52-13

BACK PAN

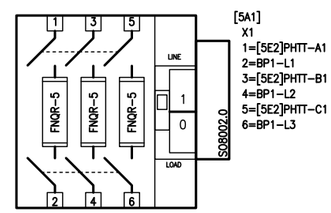

[5A1]
X1
1=[5E2]PHTT-A1
2=BP1-L1
3=[5E2]PHTT-B1
4=BP1-L2
5=[5E2]PHTT-C1
6=BP1-L3

TELEMECHANIQUE
GS1EERU30
30A CC 3 POLE

BOTTOM PAN

DOOR

NOTES:
A ALL COMPONENTS ARE PROVIDED IN MAIN BREAKER CONTROL POWER ASSEMBLY 80330-033-51 UNLESS OTHERWISE NOTED.
B PROVIDED IN CLOSED TRANSFER OPTION ASSEMBLY 80330-046-51.

SECTION 5

JOB NAME:	BUILDING #22 RENOVATIONS	EQUIPMENT DESIGNATION:	SEC SWG A & B NEMA 1
JOB LOCATION:	ALBANY, NY	EQUIPMENT TYPE:	PZ4 SWITCHGEAR
DRAWN BY:	J. BROWN	DRAWING TYPE:	WIRING DIAGRAM
ENGR:	JJ		SQUARE D Schneider Electric
DATE:	DECEMBER 04, 2006		
DRAWING STATUS:	RECORD	DWG# W21295878-007-05	PG 1 OF 3 REV A

REV	DESCRIPTION	BY	DATE										
A	REVISED TVSS WIRING	TT	02/07/07	B	CHANGE PHLB TO PHTB AND PHTB TO PHLB	JJ	02/12/07	D	REVISED TO/FROM WIRING	DRF	12/03/2014
				C	ADD 24V TO M6C	JJ	02/22/07	–	----	--	--/--

CELL A INSTRUMENT COMPARTMENT

SEE SHEET 1 FOR WIRING

CELL BC BREAKER COMPARTMENT

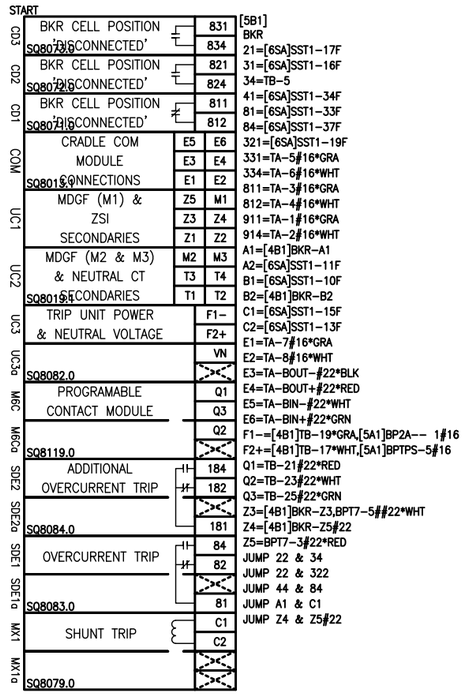

[5B1]
BKR
21=[6SA]SST1-17F
31=[6SA]SST1-16F
34=TB-5
41=[6SA]SST1-34F
81=[6SA]SST1-33F
84=[6SA]SST1-37F
321=[6SA]SST1-19F
331=TA-5#16*GRA
334=TA-6#16*WHT
811=TA-3#16*GRA
812=TA-4#16*WHT
911=TA-1#16*GRA
914=TA-2#16*WHT
A1=[4B1]BKR-A1
A2=[6SA]SST1-11F
B1=[6SA]SST1-10F
B2=[4B1]BKR-B2
C1=[6SA]SST1-15F
C2=[6SA]SST1-13F
E1=TA-7#16*GRA
E2=TA-8#16*WHT
E3=TA-BOUT-#22*BLK
E4=TA-BOUT+#22*RED
E5=TA-BIN-#22*WHT
E6=TA-BIN+#22*GRN
F1-=[4B1]TB-19*GRA,[5A1]BP2A-- 1#16
F2+=[4B1]TB-17*WHT,[5A1]BPTPS-5#16
Q1=TB-21#22*RED
Q2=TB-23#22*WHT
Q3=TB-25#22*GRN
Z3=[4B1]BKR-Z3,BPT7-5##22*WHT
Z4=[4B1]BKR-Z5#22
Z5=BPT7-3#22*RED
JUMP 22 & 34
JUMP 22 & 322
JUMP 44 & 84
JUMP A1 & C1
JUMP Z4 & Z5#22

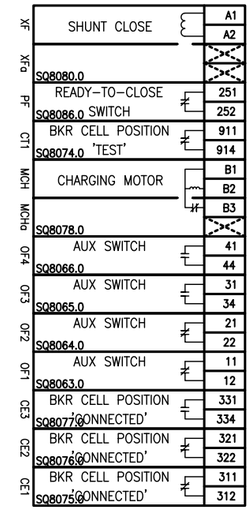

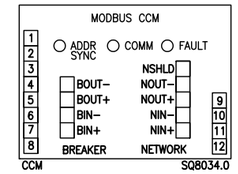

[5B1]
TA
1=BKR-911#16*GRA
2=BKR-914#16*WHT
3=BKR-811#16*GRA
4=BKR-812#16*WHT
5=BKR-331#16*GRA
6=BKR-334#16*WHT
7=BKR-E1#16*GRA
8=BKR-E2#16*WHT
9=[4B1]TA-10*WHT
10=[6SD]SST2-3F*WHT
11=[4B1]TA-12*GRA
12=[6SD]SST2-4F*GRA
BIN+=BKR-E6#22*GRN
BIN-=BKR-E5#22*WHT
BOUT+=BKR-E4#22*RED
BOUT-=BKR-E3#22*BLK
NIN+=[4B1]TA-NIN+,[6SD]SST2-5F##22**GRN
NIN-=[4B1]TA-NIN-,[6SD]SST2-6F##22**WHT
NOUT+=[4B1]TA-NOUT+,[6SD]SST2-7F##22**RED
NOUT-=[4B1]TA-NOUT-,[6SD]SST2-8F##22**BLK
NSHLD=[4B1]TA-NSHLD,[6SD]SST2-9F##22**SHLD

pn 27906-12108

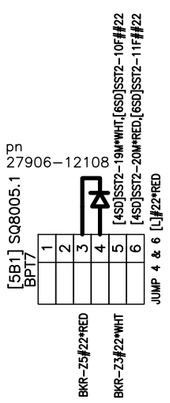

[5B1]
CDL
G=WIRE-S#22*SHLD

CHASSIS GROUND G

SHIELD FOR M6C WIRE

[5B1]
WIRE
S=CDL-G#22*SHLD

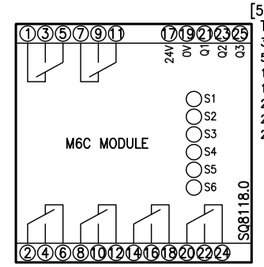

[5B1]
TB
3=[6SA]SST1-18F
5=[5A1]BP1-14,BKR-34
17=[6SD]SST2-1F*WHT,[5A1]BPTPS-5#16
19=[6SD]SST2-2F*GRA,[5A1]BP2A-- 2#16
21=BKR-Q1#22*RED
23=BKR-Q2#22*WHT
25=BKR-Q3#22*GRN

CELL D BLANK COMPARTMENT

SEE SHEET 3 FOR WIRING

BUS / CABLE COMPARTMENT

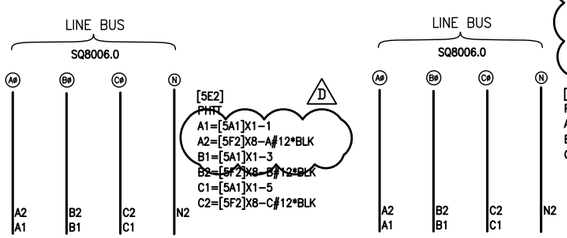

[5E2]
PHTT
A1=[5A1]X1-1
A2=[5F2]X8-A#12*BLK
B1=[5A1]X1-3
B2=[5F2]X8-B#12*BLK
C1=[5A1]X1-5
C2=[5F2]X8-C#12*BLK

[5E3]
PHTB
A2=[5F4]R1-2#6*GRA/BRN
B2=[5F4]R1-4#6*GRA/ORN
C2=[5F4]R1-6#6*GRA/YEL

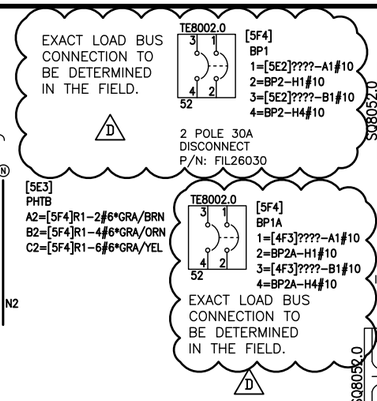

[5F4]
BP1
1=[5E2]????-A1#10
2=BP2-H1#10
3=[5E2]????-B1#10
4=BP2-H4#10

[5F4]
BP2
H1=BP1-2#10
H4=BP1-4#10
X1=BP3-A#8
X4=[5D1]BPTA-5#8
JUMP H2 & H3#10
JUMP X1 & X3#8
JUMP X2 & X4#8

[5F4]
BP1A
1=[4F3]????-A1#10
2=BP2A-H1#10
3=[4F3]????-B1#10
4=BP2A-H4#10

[5F4]
BP2A
H1=BP1A-2#10
H4=BP1A-4#10
X1=BP3A-A#8
X2=[4F4]GND-1#8
X4=[5D1]BPTA-4#8
JUMP H2 & H3#10
JUMP X1 & X3#8
JUMP X2 & X4#8

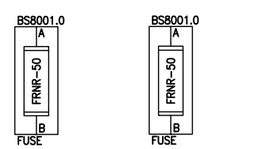

[5F4]
BP3
A=BP2-X1#8
B=[5D1]BPTA-2#8

[5F4]
BP3A
A=BP2A-X1#8
B=[5D1]BPTA-1#8

PHASE, NEUTRAL, AND GND CONDUCTORS MUST BE TWISTED TOGETHER WITH A WIRE LENGTH LESS THAN 8 FT.

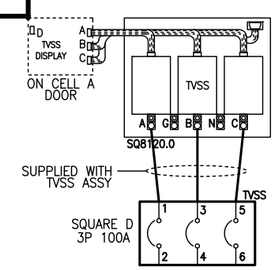

[5F4]
R1
2=[5E3]PHTB-A2#6*GRA/BRN
4=[5E3]PHTB-B2#6*GRA/ORN
6=[5E3]PHTB-C2#6*GRA/YEL
G=GND-1#6
N=GND-2#6

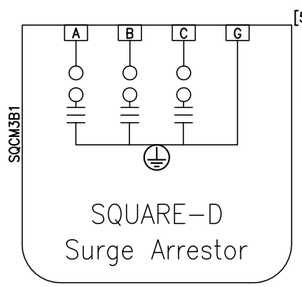

P/N: SDSA3650

[5F2]
X8
A=[5E2]PHTT-A2#12*BLK
B=[5E2]PHTT-B2#12*BLK
C=[5E2]PHTT-C2#12*BLK
G=[5F4]GND-9#12*WHT

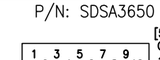

[5F4]
GND
1=R1-G#6
2=R1-N#6
8=[5A1]BP3-G
9=[5F2]X8-G#12*WHT

NOTES:
1. ALL #22 AWG WIRE WITH A COLOR DESIGNATION (RED, BLK, WHT, GRN) IS 8723 4-CONDUCTOR BELDEN CABLE.
2. ALL WIRE DESIGNATIONS INCLUDING A COLOR (GRA, WHT) PLUS A ONE OR TWO DIGIT NUMBER INDICATE A TWISTED PAIR WIRE.
3. ROUTE ALL BELDEN CABLE AND TWISTED PAIR WIRE IN BOTTOM WIREWAY.

SECTION 5

JOB NAME:	BUILDING #22 RENOVATIONS	EQUIPMENT DESIGNATION:	SEC SWG A & B NEMA 1
JOB LOCATION:	ALBANY, NY	EQUIPMENT TYPE:	PZ4 SWITCHGEAR
DRAWN BY:	J. BROWN	DRAWING TYPE:	WIRING DIAGRAM
ENGR:	JJ		SQUARE D Schneider Electric
DATE:	DECEMBER 04, 2006		
DRAWING STATUS:	RECORD	DWG# W21295878-007-05	PG 2 OF 3 REV D

REV	DESCRIPTION	BY	DATE	—	----	--	--/--	—	----	--	--/--
—	----	--	--/--	—	----	--	--/--	—	----	--	--/--

CELL D INSTRUMENT COMPARTMENT

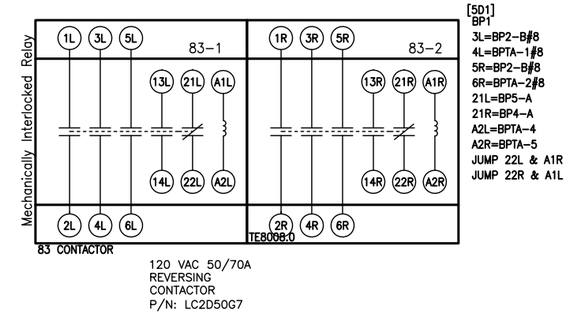

120 VAC 50/70A
REVERSING
CONTACTOR
P/N: LC2D50G7

G1
CONTROL POWER
FAILURE RELAY

[5D1]
BP50
5=[6SA]SST1-29F
9=[5A1]BP52-9,BP51-9
13=BP3-A
14=BPTA-4

△ 4PDT 5A RELAY
P/N: 8501NR45,
8501RS14P14V20,
8501NH45

M1
CONTROL POWER
FAILURE RELAY

[5D1]
BP51
5=[6SA]SST1-28F
9=BP50-9
13=BP6-A
14=BPTA-5

△ 4PDT 5A RELAY
P/N: 8501NR45,
8501RS14P14V20,
8501NH45

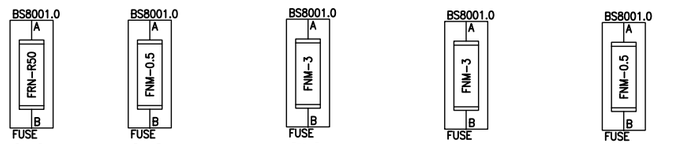

[5D1]
BP2
A=[6SA]SST1-2F#8
B=BP1-3L,BP1-5R##8

[5D1]
BP3
A=BP50-13
B=BPTA-1

[5D1]
BP4
A=BP1-21R
B=BPTA-1

[5D1]
BP5
A=BP1-21L
B=BPTA-2

[5D1]
BP6
A=BP51-13
B=BPTA-2

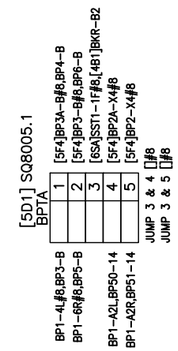

BACK PAN

BOTTOM PAN

RIGHT PAN

NOTES:
△A ALL COMPONENTS ARE PROVIDED IN MAIN BREAKER CONTROL POWER ASSEMBLY 80330-033-51 UNLESS OTHERWISE NOTED.
△B PROVIDED IN CLOSED TRANSFER OPTION ASSEMBLY 80330-046-51.

SECTION 5

JOB NAME:	BUILDING #22 RENOVATIONS	EQUIPMENT DESIGNATION:	SEC SWG A & B NEMA 1
JOB LOCATION:	ALBANY, NY	EQUIPMENT TYPE:	PZ4 SWITCHGEAR
DRAWN BY:	J. JEFFCOAT	DRAWING TYPE:	WIRING DIAGRAM
ENGR:	JJ		SQUARE D Schneider Electric
DATE:	DECEMBER 04, 2006		
DRAWING STATUS:	RECORD	DWG# W21295878-007-05	PG 3 OF 3 REV —

REV	DESCRIPTION	BY	DATE	–	----	--	--/--	–	----	--	--/--
A	NO MB+, ETHERNET	JJ	01/17/07	–	----	--	--/--	–	----	--	--/--

CELL A INSTRUMENT COMPARTMENT

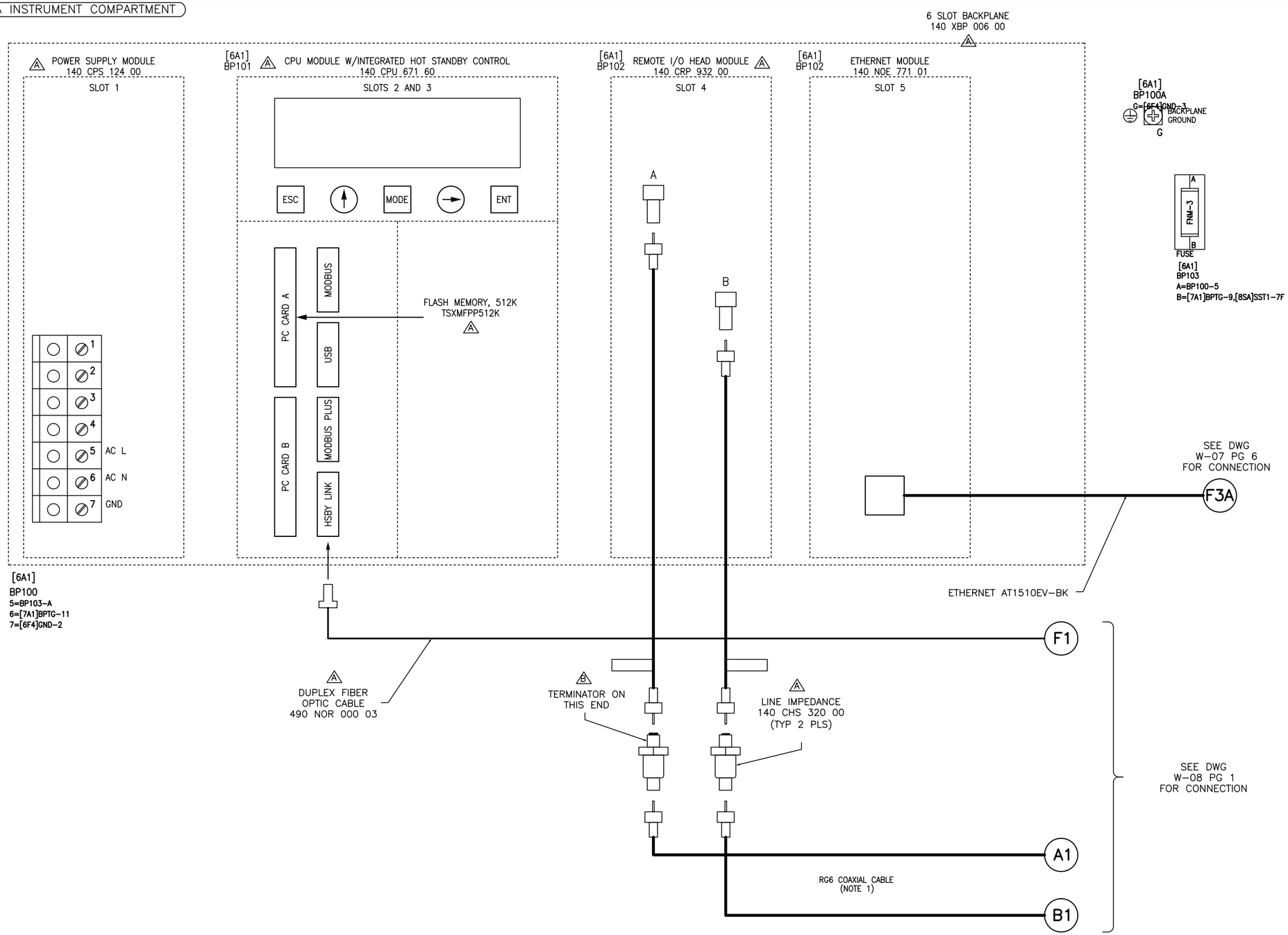

NOTES:

1. COAXIAL CABLES ARE FABRICATED FROM CABLE 97-5750-000 AND MA-0329-001 'F' CONNECTORS.

A COMPONENTS ARE PROVIDED IN PRIMARY CPU ASSEMBLY PZ4-00000-24116

B ORIENT LINE IMPEDANCE DEVICES SO TERMINATOR (PLASTIC PROTRUSION) IS TOWARD CRP MODULE. APPLY LABEL TAGS TO COAXIAL CABLES CONNECTED TO CRP MODULE NEAR END THAT CONNECTS TO LINE IMPEDANCE.

SECTION 6

JOB NAME:	BUILDING #22 RENOVATIONS	EQUIPMENT DESIGNATION:	SEC SWG A & B NEMA 1
JOB LOCATION:	ALBANY, NY	EQUIPMENT TYPE:	PZ4 SWITCHGEAR
DRAWN BY:	J. JEFFCOAT	DRAWING TYPE:	WIRING DIAGRAM
ENGR:	JJ		SQUARE D Schneider Electric
DATE:	DECEMBER 04, 2006		
DRAWING STATUS:	RECORD	DWG# W21295878-007-06	PG 1 OF 3 REV A

REV	DESCRIPTION	BY	DATE	B	REVISED TO/FROM WIRING	DRF	12/03/2014	–	----	--	--/--
A	ADD 24V TO M6C	JJ	02/22/07	–	----	--	--/--	–	----	--	--/--

CELL A INSTRUMENT COMPARTMENT

SEE SHEET 1 FOR WIRING

CELL BC BREAKER COMPARTMENT

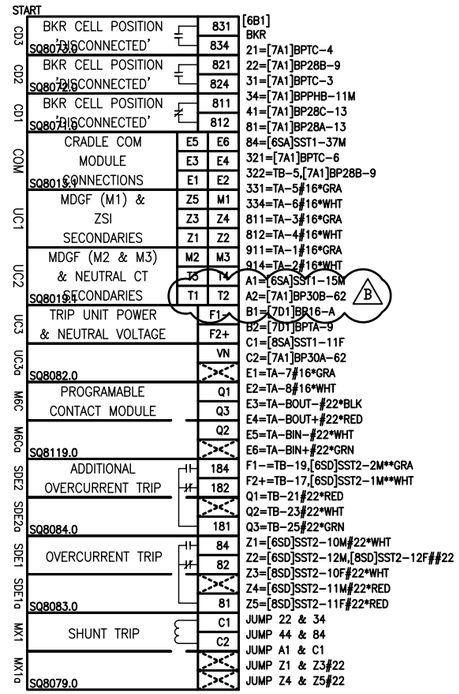

[6B1]
BKR
21=[7A1]BPTC-4
22=[7A1]BP28B-9
31=[7A1]BPTC-3
34=[7A1]BPPHB-11M
41=[7A1]BP28C-13
81=[7A1]BP28A-13
84=[6SA]SST1-37M
321=[7A1]BPTC-6
322=TB-5,[7A1]BP28B-9
331=TA-5#16*GRA
334=TA-6#16*WHT
811=TA-3#16*GRA
812=TA-4#16*WHT
911=TA-1#16*GRA
914=TA-2#16*WHT
A1=[6SA]SST1-15M
A2=[7A1]BP30B-62
B1=[7D1]BP16-A
B2=[7D1]BPTA-9
C1=[8SA]SST1-11F
C2=[7A1]BP30A-62
E1=TA-7#16*GRA
E2=TA-8#16*WHT
E3=TA-BOUT-#22*BLK
E4=TA-BOUT+#22*RED
E5=TA-BIN-#22*WHT
E6=TA-BIN+#22*GRN
F1-=TB-19,[6SD]SST2-2M**GRA
F2+=TB-17,[6SD]SST2-1M**WHT
Q1=TB-21#22*RED
Q2=TB-23#22*WHT
Q3=TB-25#22*GRN
Z1=[6SD]SST2-10M#22*WHT
Z2=[6SD]SST2-12M,[8SD]SST2-12F##22
Z3=[8SD]SST2-10F#22*WHT
Z4=[6SD]SST2-11M#22*RED
Z5=[8SD]SST2-11F#22*RED
JUMP 22 & 34
JUMP 44 & 84
JUMP A1 & C1
JUMP Z1 & Z3#22
JUMP Z4 & Z5#22

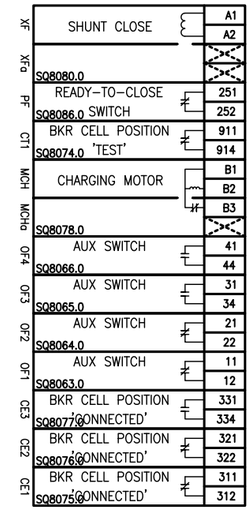

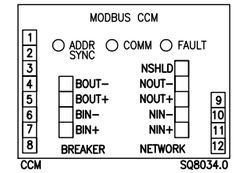

[6B1]
TA
1=BKR-911#16*GRA
2=BKR-914#16*WHT
3=BKR-811#16*GRA
4=BKR-812#16*WHT
5=BKR-331#16*GRA
6=BKR-334#16*WHT
7=BKR-E1#16*GRA
8=BKR-E2#16*WHT
9=[6SD]SST2-3M*WHT
10=[8SD]SST2-3F*WHT
11=[6SD]SST2-4M*GRA
12=[8SD]SST2-4F*GRA
BIN+=BKR-E6#22*GRN
BIN-=BKR-E5#22*WHT
BOUT+=BKR-E4#22*RED
BOUT-=BKR-E3#22*BLK
NIN+=[6SD]SST2-5M,[8SD]SST2-5F##22**GRN
NIN-=[6SD]SST2-6M,[8SD]SST2-6F##22**WHT
NOUT+=[6SD]SST2-7M,[8SD]SST2-7F##22**RED
NOUT-=[6SD]SST2-8M,[8SD]SST2-8F##22**BLK
NSHLD=[6SD]SST2-9M,[8SD]SST2-9F##22**SHLD

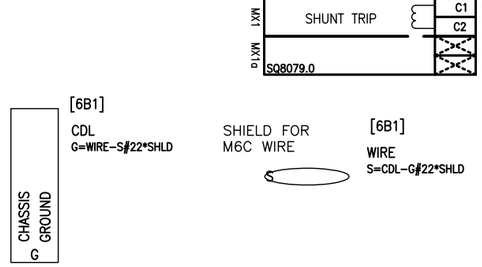

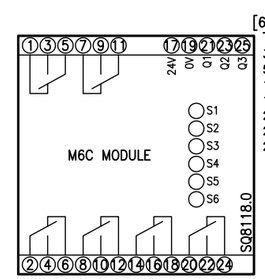

[6B1]
TB
3=[7A1]BPTC-7
5=BKR-322,[8SA]SST1-18F
17=BKR-F2+,[8SD]SST2-1F**WHT
19=BKR-F1-,[8SD]SST2-2F**GRA
21=BKR-Q1#22*RED
23=BKR-Q2#22*WHT
25=BKR-Q3#22*GRN

CELL D BLANK COMPARTMENT

SEE SHEET 3 FOR WIRING

PULL APART SHIPPING SPLIT TERMINALS

TOP WIREWAY

[6SA]BS8002.1
SST1

[7D1]BP27-NA#8,[6D1]X2-N#12	1M	1F	[5D1]BPTA-3#8
[7D1]BP1-4L#8	2M	2F	[5D1]BP2-A#8
[7D1]BPTA-1	3M	3F	[5A1]BPTPS-2
[7D1]BP7-A	4M	4F	[5A1]BPTPS-1
[7D1]BPTA-2	5M	5F	[4A1]D01K-N
[7D1]BP8-A	6M	6F	[4A1]D01K-L
[7D1]BPTA-4	7M	7F	[5A1]BP3-N(-)
[7D1]BP10-A	8M	8F	[5A1]BP3-L(+)
[7D1]BP14-A	9M	9F	[4B1]BKR-B1
[7D1]BP15-A	10M	10F	[5B1]BKR-B1
[7A1]BP30B-52	11M	11F	[5B1]BKR-A2
[7A1]BP30B-82	12M	12F	[4B1]BKR-A2
[7A1]BP30A-52	13M	13F	[5B1]BKR-C2
[7A1]BP30A-82	14M	14F	[4B1]BKR-C2
[6B1]BKR-A1,[7A1]BP26A-14	15M	15F	[5B1]BKR-C1
[7A1]BPTB-11	16M	16F	[5B1]BKR-31
[7A1]BPTB-12	17M	17F	[5B1]BKR-21
[7A1]BPTB-8	18M	18F	[5B1]TB-3
[7A1]BPTB-14	19M	19F	[5B1]BKR-321
[7A1]BPTPHA-11M	20M	20F	[5A1]BP1-11
[7A1]BP26A-12,[8SA]SST1-13F	21M	21F	[5A1]BP1-14
[7A1]BPTD-3	22M	22F	[4B1]BKR-31
[7A1]BPTD-4	23M	23F	[4B1]BKR-21
[7A1]BPTD-6	24M	24F	[4B1]BKR-321
[7A1]BPTD-8	25M	25F	[4B1]TB-3
[7A1]BP26B-12,[7A1]BPPHC-17M	26M	26F	[4B1]BKR-34
[7A1]BPPHC-3M	27M	27F	[4A1]BP3-11
[7A1]BPTH-1	28M	28F	[5D1]BP51-5
[7A1]BPTH-3	29M	29F	[5D1]BP50-5
[7A1]BPTH-5	30M	30F	[5A1]BP52-5
[7A1]BPTH-7	31M	31F	[4A1]BP52-5
[8SA]SST1-34F	32M	32F	[4A1]BP52-9
[7A1]BP26A-13	33M	33F	[5B1]BKR-81
[7A1]BP26C-13	34M	34F	[5B1]BKR-41
[7A1]BP26B-13	35M	35F	[4B1]BKR-81
[7A1]BP26D-13	36M	36F	[4B1]BKR-41
[6B1]BKR-84,[7A1]BPTX-6	37M	37F	[4B1]BKR-84,[5B1]BKR-84
	38M	38F	
	39M	39F	
	40M	40F	

BOTTOM WIREWAY

[6SD]BS8002.1
SST2

[6B1]BKR-F2+*WHT	1M	1F	[5A1]BP52-14,[5B1]TB-17**WHT
[6B1]BKR-F1-*GRA	2M	2F	[5A1]D05K-2,[5B1]TB-19**GRA
[6B1]TA-9*WHT,[7A1]BP25A-+	3M	3F	[5B1]TA-10*WHT
[6B1]TA-11*GRA,[7A1]BP25A--	4M	4F	[5B1]TA-12*GRA
[6B1]TA-NIN+#22*GRN	5M	5F	[5B1]TA-NIN+#22*GRN
[6B1]TA-NIN-#22*WHT	6M	6F	[5B1]TA-NIN-#22*WHT
[6B1]TA-NOUT+#22*RED	7M	7F	[5B1]TA-NOUT+#22*RED
[6B1]TA-NOUT-#22*BLK	8M	8F	[5B1]TA-NOUT-#22*BLK
[6B1]TA-NSHLD#22*SHLD	9M	9F	[5B1]TA-NSHLD#22*SHLD
[6B1]BKR-Z1#22*WHT	10M	10F	[5B1]BPT7-5#22
[6B1]BKR-Z4#22*RED	11M	11F	[5B1]BPT7-6#22
[6B1]BKR-Z2#22	12M	12F	[4B1]BKR-Z4#22
[8SD]SST2-13F	13M	13F	[5A1]BP2B-+ 1
[8SD]SST2-14F	14M	14F	[5A1]BP2B-- 1
	15M	15F	
	16M	16F	

BUS / CABLE COMPARTMENT

UPS

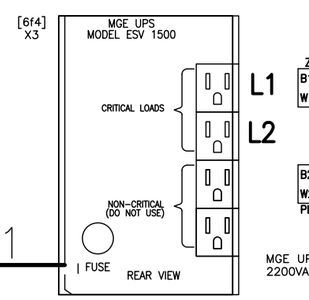

TO UPS PLUG P1

P/N 89347

(MOUNTED TO BOTTOM PAN)
(w/PZ4-00000-08060 & 61)

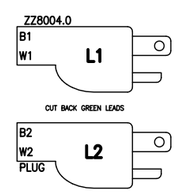

[6F4]
X1
B1=[6D1]BP23-A
B2=[6D1]BPTB-1
W1=[6D1]BPTB-3
W2=[6D1]BPTB-2

MGE UPS
2200VA, 1500W

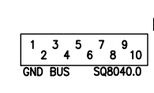

[6F4]
GND
1=[6D1]X2-G#12
2=[6A1]BP100-7
3=[6A1]BP100A-G

NOTES:
1. ALL #22 AWG WIRE WITH A COLOR DESIGNATION (RED, BLK, WHT, GRN) IS 8723 4-CONDUCTOR BELDEN CABLE.
2. ALL WIRE DESIGNATIONS INCLUDING A COLOR (GRA, WHT) PLUS A ONE OR TWO DIGIT NUMBER INDICATE A TWISTED PAIR WIRE.
3. ROUTE ALL BELDEN CABLE AND TWISTED PAIR WIRE IN BOTTOM WIREWAY.
4. DO NOT GROUND GREEN WIRE IN THE CORDS.
CUT GREEN GROUND WIRE BACK TO THE INSULATION
CABLES FROM UPS OUTPUT ARE 3/C #14 POWER

SECTION 6

JOB NAME:	BUILDING #22 RENOVATIONS	EQUIPMENT DESIGNATION:	SEC SWG A & B NEMA 1
JOB LOCATION:	ALBANY, NY	EQUIPMENT TYPE:	PZ4 SWITCHGEAR
DRAWN BY:	J. BROWN	DRAWING TYPE:	WIRING DIAGRAM
ENGR:	JJ		SQUARE D Schneider Electric
DATE:	DECEMBER 04, 2006		
DRAWING STATUS:	RECORD	DWG# W21295878-007-06	PG 2 OF 3 REV B

REV	DESCRIPTION	BY	DATE	–	----	--	--/--	–	----	--	--/--
A	ADD BPTB3	JJ	02/01/07	–	----	--	--/--	–	----	--	--/--

CELL D INSTRUMENT COMPARTMENT

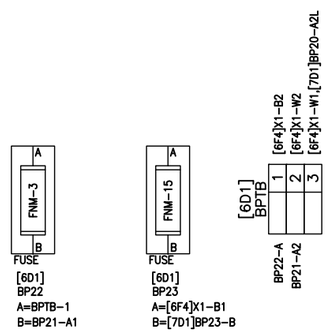

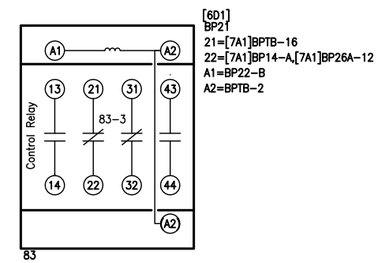

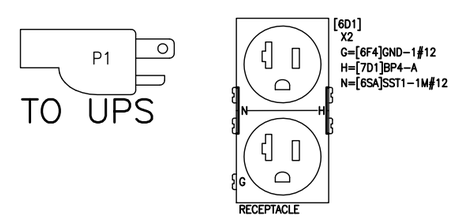

SECTION 6

JOB NAME:	BUILDING #22 RENOVATIONS	EQUIPMENT DESIGNATION:	SEC SWG A & B NEMA 1
JOB LOCATION:	ALBANY, NY	EQUIPMENT TYPE:	PZ4 SWITCHGEAR
DRAWN BY:	J. JEFFCOAT	DRAWING TYPE:	WIRING DIAGRAM
ENGR:	JJ		SQUARE D Schneider Electric
DATE:	DECEMBER 04, 2006		
DRAWING STATUS:	RECORD	DWG# W21295878-007-06	PG 3 OF 3 REV A

REV	DESCRIPTION	BY	DATE										
A	REVISED TO/FROM WIRING	DRF	12/03/2014	–	----	--	--/--	–	----	--	--/--
				–	----	--	--/--	–	----	--	--/--

CELL A INSTRUMENT COMPARTMENT

PULL APART DOOR TERMINALS

[7A1] BPTPHA

BPTA-1	1M	
BPTA-2	2M	
BPTA-3	3M	
BPTB-2	4M	
BPTA-5	5M	
BPTB-3	6M	
BPTA-8	7M	
BPTB-7	8M	
BPTB-4	9M	
BPTB-5	10M	
	11M	[6SA]SST1-20M
BPTB-6	12M	
	13M	[8SA]SST1-12F
BPTB-13	14M	
BPTB-12	15M	
BPTB-10	16M	
BPTB-11	17M	
BPTB-9	18M	
	19M	[8SA]SST1-13F
BP31-14	20M	

20 PIN 12-16 AWG
PULL APART
TERMINAL BLOCK
P/N 25410-00200

D04C-X1	1F
D04E-X1	2F
D04G-X1	3F
D04O-X1	4F
D06Q-X1	5F
D04S-X1	6F
D04Q-X1	7F
D06C-4R	8F
D06E-2	9F
D06G-2	10F
D06O-2	11F
D06C-4L	12F
D06S-2	13F
D09E-X1	14F
D11C-X1	15F
D11C-4	16F
D11G-X1	17F
D11G-4	18F
D06E-1	19F
D04Q-X2, D06E-4	20F

A

20 PIN 12-16 AWG
PULL APART
TERMINAL BLOC9
001KP/N
25410-00198

[7A1] BPPHB

1M	BPTC-5
2M	BPTC-4
3M	BPTC-2
4M	BPTC-3
5M	BPTC-1
6M	BPTC-13
7M	BPTC-12
8M	BPTC-10
9M	BPTC-11
10M	BPTC-9
11M	[6B1]BKR-34
A1M	
A2M	
X1M	
X2M	

15 PIN 12-16 AWG
PULL APART
TERMINAL BLOCK
P/N 80420-625-01

1F	D09K-X1
2F	D11I-X1
3F	D11I-4
4F	D11M-X1
5F	D11M-4
6F	D09Q-X1
7F	D11O-X1
8F	D11O-4
9F	D11S-X1
10F	D11S-4
11F	D11M-3
A1F	
A2F	
X1F	
X2F	

15 PIN 12-16 AWG
PULL APART
TERMINAL BLOC9
001KP/N
80420-626-01

B POWER SUPPLY MODULE
140 CPS 124 00

SLOT 1

[7A1]
BP1
5=BP10-A
6=BPTF-1
7=[7F4]GND-3

[7A1] BP2 REMOTE I/O DROP MODULE B
140 CRA932-00

SLOT 2

CHAN A CHAN B

10 SLOT
BACKPLANE
140XBP01000

B

[7A1]
BP1A
G=[7F4]GND-2
BACKPLANE
GROUND
G

CABLE 97-5750-000
B
F CONNECTOR
MA-0329-001

RG6

A2

B2

SEE DWG
W-08 PG 1
FOR CONNECTION

[7A1]
L1
TAP
IN OUT
MA-0185-100
B

NEXT TAP
W-07 PG5
A3

[7A1]
L2
TAP
IN OUT
B MA-0185-100

NEXT TAP
W-07 PG5
B3

LEFT PAN

B 120VAC OUTPUT MODULE - 1
140 DRA 840 00

SLOT 3

OUTPUT 1	L-1	1
		2
OUTPUT 2	L-2	3
		4
OUTPUT 3	L-3	5
		6
OUTPUT 4	L-4	7
		8
		9
		10
OUTPUT 5	L-5	11
		12
OUTPUT 6	L-6	13
		14
OUTPUT 7	L-7	15
		16
OUTPUT 8	L-8	17
		18
		19
		20
OUTPUT 9	L-9	21
		22
OUTPUT 10	L-10	23
		24
OUTPUT 11	L-11	25
		26
OUTPUT 12	L-12	27
		28
		29
		30
OUTPUT 13	L-13	31
		32
OUTPUT 14	L-14	33
		34
OUTPUT 15	L-15	35
		36
OUTPUT 16	L-16	37
		38
		39
		40

SLOT 3
TERMINAL CONNECTOR
B 140XTS00200

[7A1]
BP3
1=BPTA-1#18
2=BP12-B#18
3=BPTA-2#18
5=BPTA-3#18
7=BPTA-4#18
11=BPTA-5#18
13=BPTA-6#18
15=BPTA-7#18
17=BPTA-8#18
21=BPTA-9#18
22=BP13-B#18
23=BPTA-10#18
25=BPTA-11#18
27=BPTA-12#18
31=BPTA-13#18
33=BPTA-14#18
35=BPTA-15#18
37=BPTA-16#18
JUMP 2 & 4#18
JUMP 4 & 6#18
JUMP 6 & 8#18
JUMP 8 & 12#18
JUMP 12 & 14#18
JUMP 14 & 16#18
JUMP 16 & 18#18
JUMP 22 & 24#18
JUMP 24 & 26#18
JUMP 26 & 28#18
JUMP 28 & 32#18
JUMP 32 & 34#18
JUMP 34 & 36#18
JUMP 36 & 38#18

B 120VAC INPUT MODULE - 1
140 DAI 543 00

SLOT 4

INPUT 1	NC	1
		2
INPUT 2	NC	3
		4
INPUT 3	NC	5
		6
INPUT 4	NC	7
		8
		9
		10
INPUT 5	NC	11
		12
INPUT 6	NC	13
		14
INPUT 7	NC	15
		16
INPUT 8	NC	17
		18
COMMON A		19
		20
INPUT 9	NC	21
		22
INPUT 10	NC	23
		24
INPUT 11	NC	25
		26
INPUT 12	NC	27
		28
		29
		30
INPUT 13	NC	31
		32
INPUT 14	NC	33
		34
INPUT 15	NC	35
		36
INPUT 16	NC	37
		38
COMMON B		39
		40

SLOT 4
TERMINAL CONNECTOR
B 140XTS00200

[7A1]
BP4
1=BPTB-1#18
3=BPTB-2#18
5=BPTB-3#18
7=BPTB-4#18
11=BPTB-5#18
13=BPTB-6#18
15=BPTB-7#18
17=BPTB-8#18
21=BPTB-9#18
23=BPTB-10#18
25=BPTB-11#18
27=BPTB-12#18
31=BPTB-13#18
33=BPTB-14#18
35=BP31-13#18
37=BPTB-16#18
39=BPTF-2
JUMP 19 & 39#18

B 120VAC INPUT MODULE - 2
140 DAI 543 00

SLOT 5

INPUT 1	NC	1
		2
INPUT 2	NC	3
		4
INPUT 3	NC	5
		6
INPUT 4	NC	7
		8
		9
		10
INPUT 5	NC	11
		12
INPUT 6	NC	13
		14
INPUT 7	NC	15
		16
INPUT 8	NC	17
		18
COMMON A		19
		20
INPUT 9	NC	21
		22
INPUT 10	NC	23
		24
INPUT 11	NC	25
		26
INPUT 12	NC	27
		28
		29
		30
INPUT 13	NC	31
		32
INPUT 14	NC	33
		34
INPUT 15	NC	35
		36
INPUT 16	NC	37
		38
COMMON B		39
		40

SLOT 5
TERMINAL CONNECTOR
B 140XTS00200

[7A1]
BP5
1=BPTC-1#18
3=BPTC-2#18
5=BPTC-3#18
7=BPTC-4#18
11=BPTC-5#18
13=BPTC-6#18
15=BPTC-7#18
17=BPTC-8#18
21=BPTC-9#18
23=BPTC-10#18
25=BPTC-11#18
27=BPTC-12#18
31=BPTC-13#18
33=BPTC-14#18
35=BP32-13#18
37=BPTC-16#18
39=BPTF-3

[7A1]
BP9
1=BP11-A
2=BP13-A,BPTG-1

52

2 POLE 30A
DISCONNECT
P/N: FIL26030

[7A1] BPTA

1	BPPHA-1M
2	BPPHA-2M
3	BPPHA-3M
4	BPTI-4
5	BPPHA-5M
6	BPTI-6
7	BPTI-7
8	BPTI-8
9	MOVED TO BP30B-51
10	BPTI-10
11	MOVED TO BP30B-61
12	BPTI-12
13	MOVED TO BP30B-71
14	BPTI-14
15	MOVED TO BP30B-81
16	BPTI-16

A

BPTI-1	BP3-1#18
BPTI-2	BP3-2#18
BPTI-3	BP3-5#18
BP32-13	BP3-7#18
BPTI-5	BP3-11#18
BP25-13	BP3-13#18
BP31-13	BP3-15#18
BPTI-8	BP3-17#18
BPTI-9	BP3-21#18
BP30A-03	BP3-23#18
BPTI-11	BP3-25#18
BP30A-13	BP3-27#18
BPTI-13	BP3-31#18
BP30A-23	BP3-33#18
BPTI-15	BP3-35#18
BP30A-33	BP3-37#18

[7A1] BPTB

1	BPTQ-2
2	BPTQ-3
3	BPTQ-4
4	BPTQ-5
5	BPTQ-6
6	BPTQ-7
7	[6SA]SST1-18M
8	BPTQ-9
9	BPTQ-10
10	[6SA]SST1-16M,BPTQ-11
11	[6SA]SST1-17M,BPTQ-12
12	BPPHA-14M,BPTQ-13
13	[6SA]SST1-19M
14	BPTQ-15
15	[6D1]BP21-21
16	

BPTQ-1	BP4-1#18
BPTPHA-4M	BP4-3#18
BPTPHA-6M	BP4-5#18
BPTPHA-9M	BP4-7#18
BPTPHA-10M	BP4-11#18
BPTPHA-12M	BP4-13#18
BPTPHA-8M	BP4-15#18
BPTQ-8	BP4-17#18
BPTPHA-18M	BP4-21#18
BPTPHA-16M	BP4-23#18
BPTPHA-17M	BP4-25#18
BPTPHA-15M	BP4-27#18
BP26A-8	BP4-31#18
BPTQ-14	BP4-33#18
BPPHC-10M	BP4-35#18
BPTQ-16	BP4-37#18

[7A1] BPTC

1	BPTK-1
2	BPTK-2
3	[6B1]BKR-31,BPTK-3
4	[6B1]BKR-21,BPTK-4
5	BPPHB-1M,BPTK-5
6	[6B1]BKR-321
7	[6B1]TB-3
8	[8SA]SST1-14F
9	BPTK-9
10	BPTK-10
11	[8SA]SST1-15F,BPTK-11
12	[8SA]SST1-16F,BPTK-12
13	BPPHB-6M,BPTK-13
14	[8SA]SST1-17F
15	BPTK-15
16	[7D1]BP2-21

BPPHB-5M	BP5-1#18
BPPHB-3M	BP5-3#18
BPPHB-4M	BP5-5#18
BPPHB-2M	BP5-7#18
BP28B-5	BP5-11#18
BPTK-6	BP5-13#18
BPTK-7	BP5-15#18
BPTK-8	BP5-17#18
BPPHB-10M	BP5-21#18
BPPHB-8M	BP5-23#18
BPPHB-9M	BP5-25#18
BPPHB-7M	BP5-27#18
BP27A-8	BP5-31#18
BPTK-14	BP5-33#18
BPPHC-11M	BP5-35#18
BPTK-16	BP5-37#18

[7A1] BPTD

1	BPTL-1
2	BPTL-2
3	[6SA]SST1-22M,BPTL-3
4	[6SA]SST1-23M,BPTL-4
5	BPPHC-5M,BPTL-5
6	[6SA]SST1-24M
7	BPTL-7
8	[6SA]SST1-25M
9	BPTL-9
10	BPTL-10
11	[8SA]SST1-19F,BPTL-11
12	[8SA]SST1-20F,BPTL-12
13	BPPHC-12M,BPTL-13
14	[8SA]SST1-21F
15	BPTL-15
16	[8SA]SST1-22F

BPPHC-9M	BP6-1#18
BPPHC-7M	BP6-3#18
BPPHC-8M	BP6-5#18
BPPHC-6M	BP6-7#18
BP26B-8	BP6-11#18
BPTL-6	BP6-13#18
BPPHC-1M	BP6-15#18
BPTL-8	BP6-17#18
BPPHC-16M	BP6-21#18
BPPHC-14M	BP6-23#18
BPPHC-15M	BP6-25#18
BPPHC-13M	BP6-27#18
BP27B-8	BP6-31#18
BPTL-14	BP6-33#18
BPPHC-2M	BP6-35#18
BPTL-16	BP6-37#18

NOTES:

A PULL APART TERMINAL BLOCKS. TOP OR RIGHT PORTION (MALE WILL BE SCREWED TO THE PAN. BOTTOM OR LEFT PORTION (FEMALE) WILL BE USED ON DOOR HARNESS SEE SHEET 2.

B ALL COMPONENTS ARE PROVIDED IN PLC I/O ASSEMBLY PZ4-00000-24118

BACK PAN

SECTION 7

JOB NAME:	BUILDING #22 RENOVATIONS	EQUIPMENT DESIGNATION:	SEC SWG A & B NEMA 1
JOB LOCATION:	ALBANY, NY	EQUIPMENT TYPE:	PZ4 SWITCHGEAR
DRAWN BY:	J. JEFFCOAT	DRAWING TYPE:	WIRING DIAGRAM
ENGR:	JJ		SQUARE D Schneider Electric
DATE:	DECEMBER 04, 2006		
DRAWING STATUS:	RECORD	DWG# W21295878-007-07	PG 1 OF 7 REV A

REV	DESCRIPTION	BY	DATE	B	REVISED TO/FROM WIRING	DRF	12/03/2014	–	----	--	--/--
A	PHOENIX JUMOPS	JJ	02/01/07	–	----	--	--/--	–	----	--	--/--

CELL A INSTRUMENT COMPARTMENT

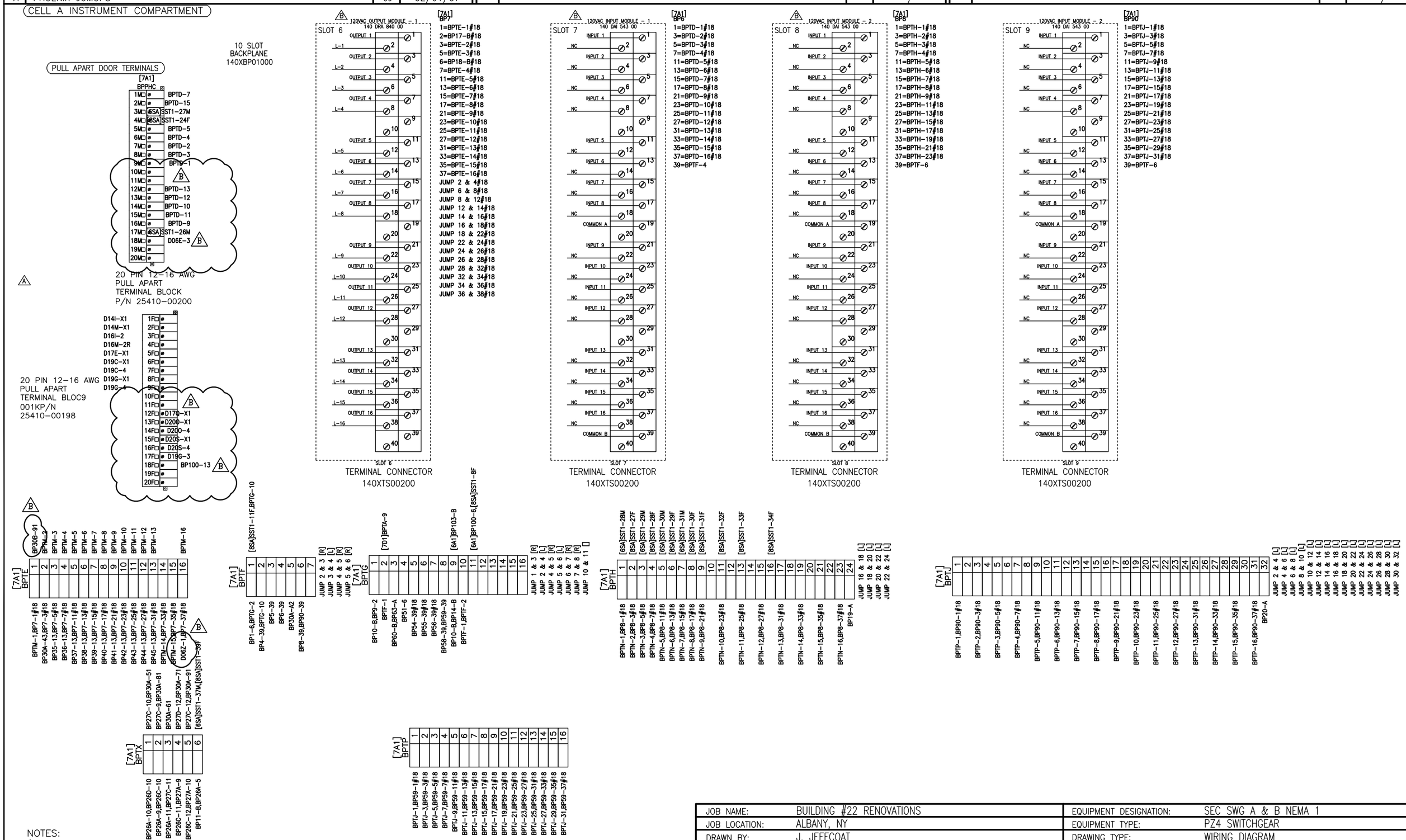

NOTES:

A PULL APART TERMINAL BLOCKS. TOP OR RIGHT PORTION (MALE WILL BE SCREWED TO THE PAN. BOTTOM OR LEFT PORTION (FEMALE) WILL BE USED ON DOOR HARNESS SEE SHEET 2.

B ALL COMPONENTS ARE PROVIDED IN PLC I/O ASSEMBLY PZ4-00000-24118

SECTION 7

JOB NAME:	BUILDING #22 RENOVATIONS	EQUIPMENT DESIGNATION:	SEC SWG A & B NEMA 1
JOB LOCATION:	ALBANY, NY	EQUIPMENT TYPE:	PZ4 SWITCHGEAR
DRAWN BY:	J. JEFFCOAT	DRAWING TYPE:	WIRING DIAGRAM
ENGR:	JJ		SQUARE D Schneider Electric
DATE:	DECEMBER 04, 2006		
DRAWING STATUS:	RECORD	DWG# W21295878-007-07	PG 2 OF 7 REV B

REV	DESCRIPTION	BY	DATE							
A	WIRE JUMPS	JJ	02/01/07	B	REVISED TO/FROM WIRING	DRF	12/03/2014	–	----	-- --
				–	----	--	--/--	–	----	-- --

CELL A INSTRUMENT COMPARTMENT

[7A1] BP10 — FNM-3 — FUSE-20
A=BP1-5
B=BPTG-1,BPTG-9

[7A1] BP11 — FNM-3 — FUSE-20
A=BP9-1,[7D1]BPTA-10
B=BPTX-6

[7A1] BP12 — FNQ-R3 — FUSE-21
A=BP13-A,BP18-A
B=BP3-2#18

[7A1] BP13 — FNQ-R3 — FUSE-22
~~A=BP12-A,BP9-2~~
B=BP3-22#18,D19M-3
B

[7A1] BP14 — KTK-R0.5 — FUSE-22
A=[6D1]BP21-22
B=BP15-B,BPTG-9

[7A1] BP15 — KTK-R0.5 — FUSE-22
A=[7D1]BP2-22
B=BP14-B,BP16-B

[7A1] BP16 — KTK-R0.5 — FUSE-22
A=BP27B-12
B=BP15-B,BP19-B

[7A1] BP17 — FNQ-R3 — FUSE-22
A=BP18-A
B=BP7-2#18

[7A1] BP18 — FNQ-R3 — FUSE-22
A=BP12-A,BP17-A
B=BP7-6#18

[7A1] BP19 — KTK-R0.5 — FUSE-22
A=BPTH-24
B=BP16-B,BP20-B

[7A1] BP20 — KTK-R0.5 — FUSE-22
A=BPTJ-32
B=BP19-B

[7A1] BP60 — FNM-3 — FUSE-20
A=BP51-5
B=BPTG-3

[7A1] BP62 — FNQ-R3 — FUSE-20
A=BP63-A,BP64-A
B=BP53-2#18

[7A1] BP63 — FNQ-R3 — FUSE-20
A=BP62-A,BPTG-3
B=BP53-22#18

[7A1] BP64 — FNQ-R3 — FUSE-20
A=BP62-A,BP65-A
B=BP57-2#18

[7A1] BP65 — FNQ-R3 — FUSE-20
A=BP64-A
B=BP57-6#18

[7A1] BP25 — ICECUBE RELAY
5=RTZB-2
9=RTZB-1
13=BPTA-6
14=BP31-14,BP32-14
B 4PDT 5A RELAY P/N: 8501NR45, 8501RS14P14V20, 8501NH45

[7A1] BP26A — ICECUBE RELAY
5=BPTX-6
7=BP26B-5
8=BPTB-13
9=BP26B-9,BPTX-2
10=BP26B-10,BPTX-1
11=BP26B-11,BPTX-3
12=[6D1]BP21-22,[6SA]SST1-21M
13=[6SA]SST1-33M
14=[6SA]SST1-15M,BP26B-14
JUMP 5 & 6
JUMP 6 & 7
4PDT 5A RELAY P/N: 8501NR45, 8501RS14P14V20, 8501NH45

[7A1] BP26B — ICECUBE RELAY
5=BP26A-7
7=BP26C-5
8=BPTD-5
9=BP26A-9
10=BP26A-10
11=BP26A-11,BP27A-11
12=[6SA]SST1-26M,[8SA]SST1-23F
13=[6SA]SST1-35M
14=BP26A-14,BP26C-14
JUMP 5 & 6
JUMP 6 & 7
4PDT 5A RELAY P/N: 8501NR45, 8501RS14P14V20, 8501NH45

[7A1] BP26C — ICECUBE RELAY
5=BP26B-7
6=BP26D-5
7=BP26D-7,BP28C-11
8=BP26D-8,BP28C-12
9=BP26D-9,BP27C-7
10=BPTX-2
11=BP26D-11,BPTX-4
12=BP26D-12,BPTX-5
13=[6SA]SST1-34M
14=BP26B-14,BP26D-14
JUMP 5 & 6
4PDT 5A RELAY P/N: 8501NR45, 8501RS14P14V20, 8501NH45

[7A1] BP26D — ICECUBE RELAY
5=BP26C-6
6=BP27A-5
7=BP26C-7
8=BP26C-8
9=BP26C-9
10=BPTX-1
11=BP26C-11
12=BP26C-12
13=[6SA]SST1-36M
14=BP26C-14,BP27A-14
JUMP 5 & 6
4PDT 5A RELAY P/N: 8501NR45, 8501RS14P14V20, 8501NH45

[7A1] BP27A — ICECUBE RELAY
5=BP26D-6
7=BP27B-5
8=BPTC-13
9=BP27B-9,BPTX-4
10=BP27B-10,BPTX-5
11=BP26B-11,BP27B-11
12=[7D1]BP2-22,[8SA]SST1-18F
13=[8SA]SST1-35F
14=BP26D-14,BP27B-14
JUMP 5 & 6
JUMP 6 & 7
4PDT 5A RELAY P/N: 8501NR45, 8501RS14P14V20, 8501NH45

[7A1] BP27B — ICECUBE RELAY
5=BP27A-7
7=BP27C-8
8=BPTD-13
9=BP27A-9
10=BP27A-10
11=BP27A-11
12=BP16-A,[8SA]SST1-23F
13=[8SA]SST1-37F
14=BP27A-14,BP27C-14
JUMP 5 & 6
JUMP 6 & 7
4PDT 5A RELAY P/N: 8501NR45, 8501RS14P14V20, 8501NH45

[7A1] BP27C — ICECUBE RELAY
5=BP27D-5,BP28C-9
6=BP27D-6,BP28C-10
7=BP26C-9,BP27D-7
8=BP27B-7,BP27D-8
9=BP27D-9,BPTX-2
10=BP27D-10,BPTX-1
11=BP27D-11,BPTX-3
12=BPTX-5
13=[8SA]SST1-36F
14=BP27B-14,BP27D-14
4PDT 5A RELAY P/N: 8501NR45, 8501RS14P14V20, 8501NH45

[7A1] BP27D — ICECUBE RELAY
5=BP27C-5
6=BP27C-6
7=BP27C-7
8=BP27C-8,BP28A-5
9=BP27C-9
10=BP27C-10
11=BP27C-11
12=BPTX-4
13=[8SA]SST1-38F
14=BP27C-14,BP28A-14
B 4PDT 5A RELAY P/N: 8501NR45, 8501RS14P14V20, 8501NH45

[7A1] BP28A — ICECUBE RELAY
5=BP27D-8
8=BP28C-5
9=BP28C-9
10=BP28C-10
11=BP28C-11
12=BP28C-12
13=[6B1]BKR-81,BP28B-13
14=BP27D-14,BP28B-14
JUMP 5 & 6
JUMP 6 & 7
JUMP 7 & 8
B 4PDT 5A RELAY P/N: 8501NR45, 8501RS14P14V20, 8501NH45

[7A1] BP28B — ICECUBE RELAY
5=BPTC-5
9=[6B1]BKR-22,[6B1]BKR-322
13=BP28A-13
14=BP28A-14,BP28C-14
B 4PDT 5A RELAY P/N: 8501NR45, 8501RS14P14V20, 8501NH45

[7A1] BP28C — ICECUBE RELAY
5=BP28A-8
9=BP27C-5,BP28A-9
10=BP27C-6,BP28A-10
11=BP26C-7,BP28A-11
12=BP26C-8,BP28A-12
13=[6B1]BKR-41
14=BP28B-14,BP32-14
JUMP 5 & 6
JUMP 6 & 7
JUMP 7 & 8
4PDT 5A RELAY P/N: 8501NR45, 8501RS14P14V20, 8501NH45

B

	A2			A1
LAYER3	81	91		
LAYER2	43	51	61	71
LAYER1	03	13	23	33
	ICECUBE RELAY 3			
LAYER1	04	14	24	34
LAYER2	44	52	62	72
LAYER3	82	92		

10PST 5A RELAY P/N: X01000V02

[7A1] BP30B
51=BPTA-9
52=[6SA]SST1-11M
61=BPTA-11
62=[6B1]BKR-A2
71=BPTA-13
72=[8SA]SST1-9F
81=BPTA-15
82=[6SA]SST1-12M
91=[7A1]BPTE-1
92=[8SA]SST1-25F
A1=D06Z-2
A2=BP45-14,BP30A-A2

	A2			A1
LAYER3	81	91		
LAYER2	43	51	61	71
LAYER1	03	13	23	33
	ICECUBE RELAY 3			
LAYER1	04	14	24	34
LAYER2	44	52	62	72
LAYER3	82	92		

10PST 5A RELAY P/N: X01000V02

[7A1] BP30A
03=BPTA-10
13=BPTA-12
23=BPTA-14
33=BPTA-16
43=BPTE-2
51=BPTX-1
52=[6SA]SST1-13M
61=BPTX-3
62=[6B1]BKR-C2
71=BPTX-4
72=[8SA]SST1-10F
81=BPTX-2
82=[6SA]SST1-14M
91=BPTX-5
92=[8SA]SST1-26F
A1=D06Z-2
A2=BP30B-A2,BPTF-5
B
JUMP 14 & 62
JUMP 24 & 72
JUMP 34 & 82
JUMP 44 & 92

[7A1] BP31 — ICECUBE RELAY
5=RTZB-4
~~9=RTZB-3~~
13=BP100-10
~~14=BP25-14,BPTPHA-20M~~
B
4PDT 5A RELAY P/N: 8501NR45, 8501RS14P14V20, 8501NH45

[7A1] BP32 — ICECUBE RELAY
5=RTZB-6
~~9=RTZB-5~~
13=BP100-9
~~14=BP25-14,BP28C-14~~
B
4PDT 5A RELAY P/N: 8501NR45, 8501RS14P14V20, 8501NH45

B

[7A1] BP100 — ICECUBE RELAY
1=D19M-4
2=D19I-4
9=BP32-13
10=BP31-13
13=BPPHC-18F
14=D04S-X2,D11G-X2
4PDT 5A RELAY P/N: 8501NR45, 8501RS14P14V20, 8501NH45

[7A1] BP35 — ICECUBE RELAY
1=RTZA-2
5=RTZA-3
9=RTZA-1
13=BPTE-3
14=BP36-14
4PDT 5A RELAY P/N: 8501NR45, 8501RS14P14V20, 8501NH45

[7A1] BP36 — ICECUBE RELAY
1=RTZA-5
5=RTZA-6
9=RTZA-4
13=BPTE-4
14=BP35-14,BP37-14
4PDT 5A RELAY P/N: 8501NR45, 8501RS14P14V20, 8501NH45

[7A1] BP37 — ICECUBE RELAY
1=RTZA-8
5=RTZA-9
9=RTZA-7
13=BPTE-5
14=BP36-14,BP38-14
4PDT 5A RELAY P/N: 8501NR45, 8501RS14P14V20, 8501NH45

[7A1] BP38 — ICECUBE RELAY
1=RTZA-11
5=RTZA-12
9=RTZA-10
13=BPTE-6
14=BP37-14,BP39-14
4PDT 5A RELAY P/N: 8501NR45, 8501RS14P14V20, 8501NH45

[7A1] BP39 — ICECUBE RELAY
1=RTZA-14
5=RTZA-15
9=RTZA-13
13=BPTE-7
14=BP38-14,BP40-14
4PDT 5A RELAY P/N: 8501NR45, 8501RS14P14V20, 8501NH45

[7A1] BP40 — ICECUBE RELAY
1=RTZA-17
5=RTZA-18
9=RTZA-16
13=BPTE-8
14=BP39-14,BP41-14
4PDT 5A RELAY P/N: 8501NR45, 8501RS14P14V20, 8501NH45

[7A1] BP41 — ICECUBE RELAY
1=RTZA-20
5=RTZA-21
9=RTZA-19
13=BPTE-9
14=BP40-14,BP42-14
4PDT 5A RELAY P/N: 8501NR45, 8501RS14P14V20, 8501NH45

[7A1] BP42 — ICECUBE RELAY
1=RTZA-23
5=RTZA-24
9=RTZA-22
13=BPTE-10
14=BP41-14,BP43-14
4PDT 5A RELAY P/N: 8501NR45, 8501RS14P14V20, 8501NH45

[7A1] BP43 — ICECUBE RELAY
1=RTZA-26
5=RTZA-27
9=RTZA-25
13=BPTE-11
14=BP42-14,BP44-14
4PDT 5A RELAY P/N: 8501NR45, 8501RS14P14V20, 8501NH45

[7A1] BP44 — ICECUBE RELAY
1=RTZA-29
5=RTZA-30
9=RTZA-28
13=BPTE-12
14=BP43-14,BP45-14
4PDT 5A RELAY P/N: 8501NR45, 8501RS14P14V20, 8501NH45

[7A1] BP45 — ICECUBE RELAY
1=RTZA-32
5=RTZA-33
9=RTZA-31
13=BPTE-13
14=BP30A-A2,BP44-14
4PDT 5A RELAY P/N: 8501NR45, 8501RS14P14V20, 8501NH45

[7A1] RTZA

1	2	3	4	5	6	7	8	9	10	11	12	13	14	15	16	17	18	19	20	21	22	23	24	25	26	27	28	29	30	31	32	33
BP35-9	BP35-1	BP35-5	BP36-9	BP36-1	BP36-5	BP37-9	BP37-1	BP37-5	BP38-9	BP38-1	BP38-5	BP39-9	BP39-1	BP39-5	BP40-9	BP40-1	BP40-5	BP41-9	BP41-1	BP41-5	BP42-9	BP42-1	BP42-5	BP43-9	BP43-1	BP43-5	BP44-9	BP44-1	BP44-5	BP45-9	BP45-1	BP45-5

[7A1] RTZB

1	2	3	4	5	6	7
BP25-9	BP25-5	BP31-9	BP31-5	BP32-9	BP32-5	

SECTION 7

JOB NAME:	BUILDING #22 RENOVATIONS	EQUIPMENT DESIGNATION:	SEC SWG A & B NEMA 1
JOB LOCATION:	ALBANY, NY	EQUIPMENT TYPE:	PZ4 SWITCHGEAR
DRAWN BY:	J. JEFFCOAT	DRAWING TYPE:	WIRING DIAGRAM
ENGR:	JJ		SQUARE D Schneider Electric
DATE:	DECEMBER 04, 2006		
DRAWING STATUS:	RECORD	DWG# W21295878-007-07	PG 3 OF 7 REV B

REV	DESCRIPTION	BY	DATE								
A	A2L ON BP20	JJ	02/01/07	B	SST2 ON BP27	JJ	02/05/07	–	----	--	--/--
				–	----	--	--/--	–	----	--	--/--

CELL D INSTRUMENT COMPARTMENT

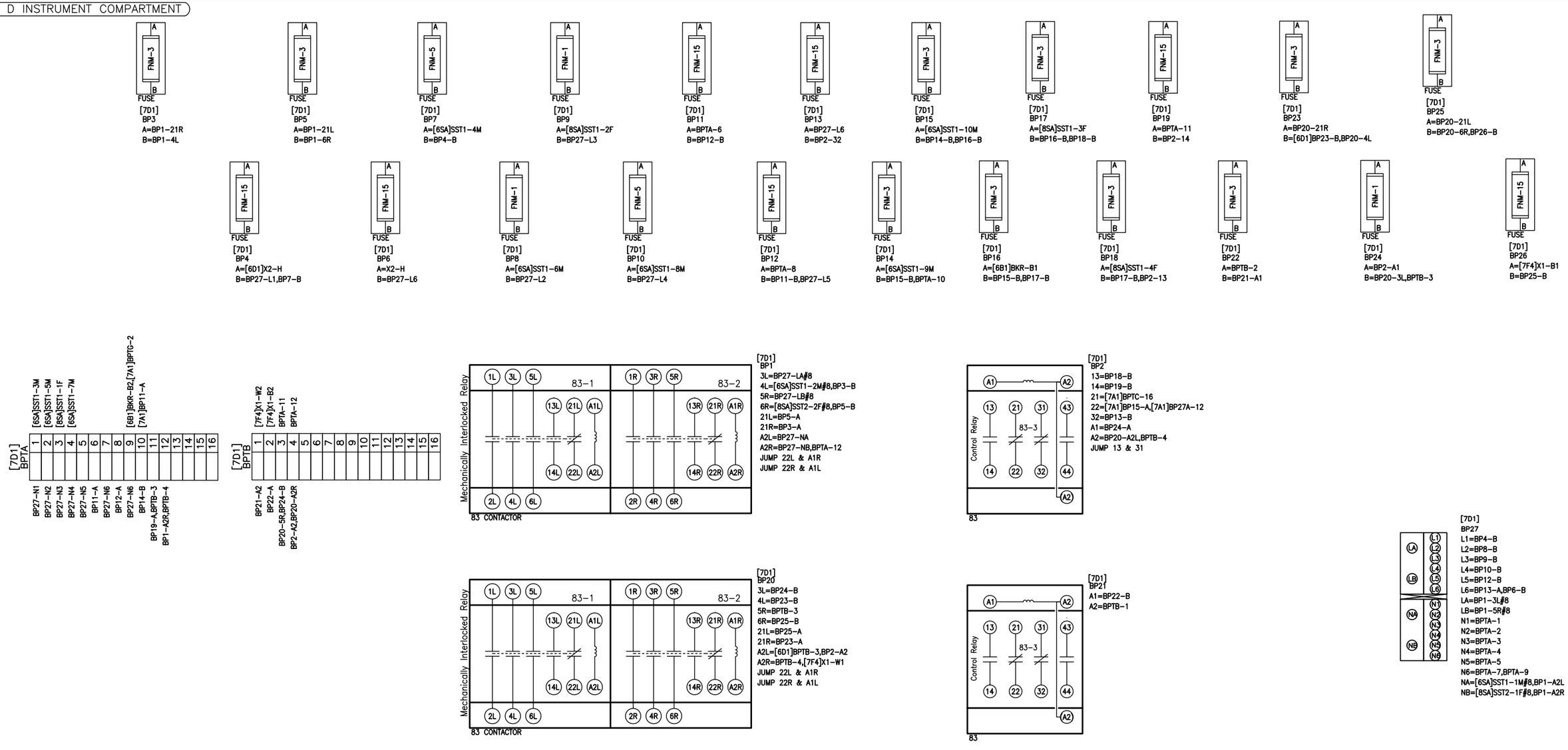

BUS / CABLE COMPARTMENT

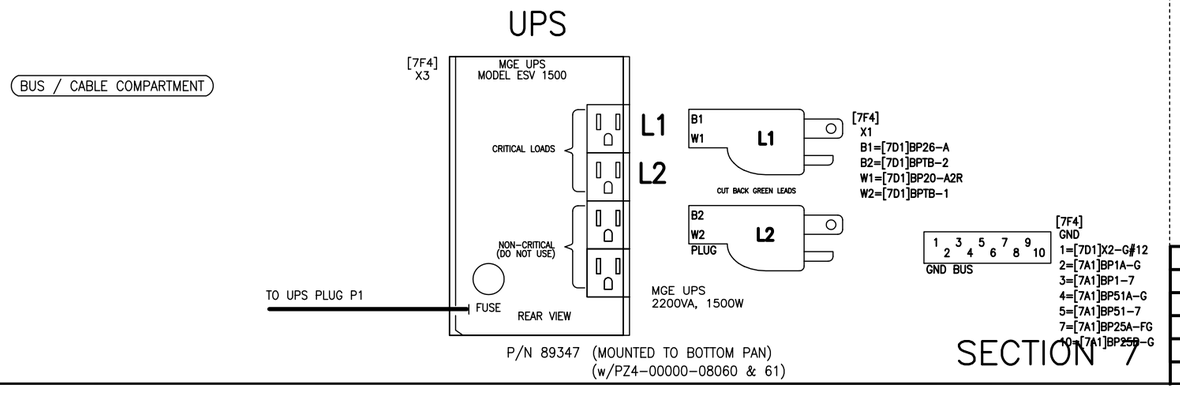

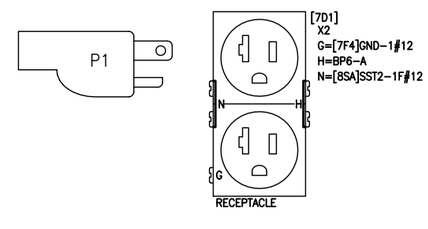

SECTION 7

JOB NAME:	BUILDING #22 RENOVATIONS	EQUIPMENT DESIGNATION:	SEC SWG A & B NEMA 1
JOB LOCATION:	ALBANY, NY	EQUIPMENT TYPE:	PZ4 SWITCHGEAR
DRAWN BY:	J. JEFFCOAT	DRAWING TYPE:	WIRING DIAGRAM
ENGR:	JJ		SQUARE D Schneider Electric
DATE:	DECEMBER 04, 2006		
DRAWING STATUS:	RECORD	DWG# W21295878-007-07	PG 4 OF 7 REV B

REV	DESCRIPTION	BY	DATE	—	----	--	--/--	—	----	--	--/--
—	----	--	--/--	—	----	--	--/--	—	----	--	--/--

CELL A INSTRUMENT COMPARTMENT

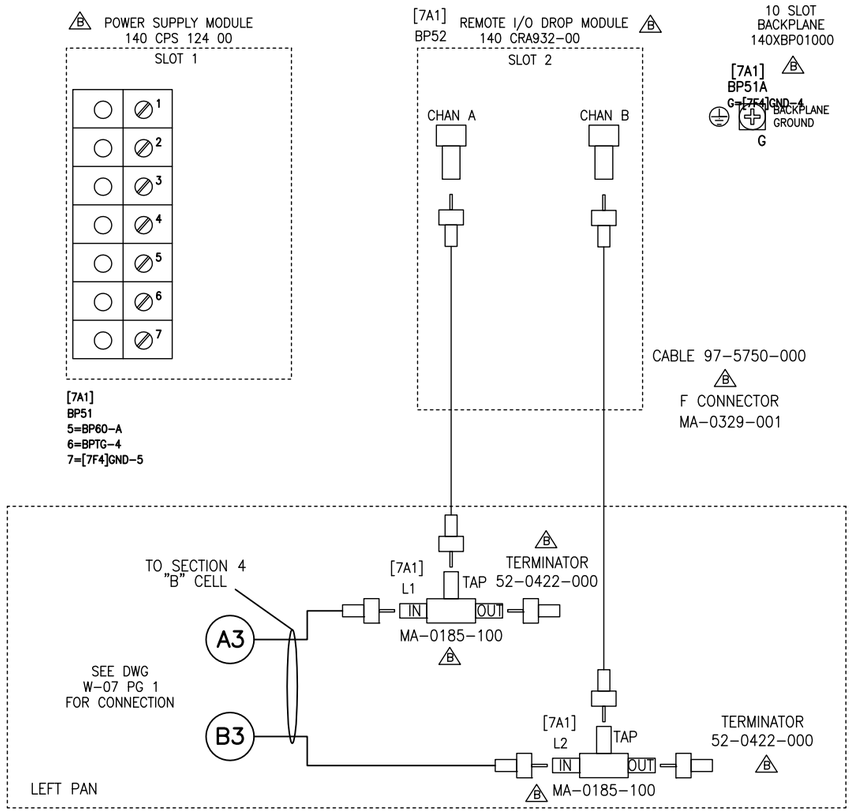

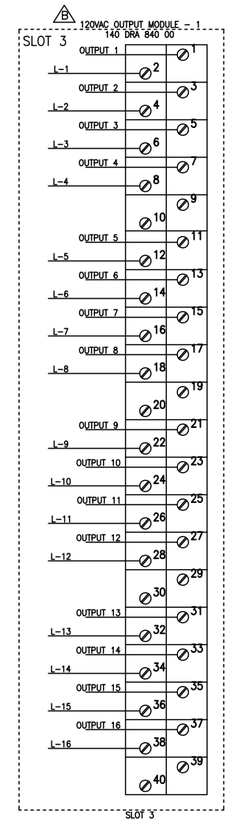

TERMINAL CONNECTOR
140XTS00200

[7A1]
BP53
1=BPTI-1#18
2=BP62-B#18
3=BPTI-2#18
5=BPTI-3#18
7=BPTI-4#18
11=BPTI-5#18
13=BPTI-6#18
15=BPTI-7#18
17=BPTI-8#18
21=BPTI-9#18
22=BP63-B#18
23=BPTI-10#18
25=BPTI-11#18
27=BPTI-12#18
31=BPTI-13#18
33=BPTI-14#18
35=BPTI-15#18
37=BPTI-16#18
JUMP 2 & 4#18
JUMP 4 & 6#18
JUMP 6 & 8#18
JUMP 8 & 12#18
JUMP 12 & 14#18
JUMP 14 & 16#18
JUMP 16 & 18#18
JUMP 22 & 24#18
JUMP 24 & 26#18
JUMP 26 & 28#18
JUMP 28 & 32#18
JUMP 32 & 34#18
JUMP 34 & 36#18
JUMP 36 & 38#18

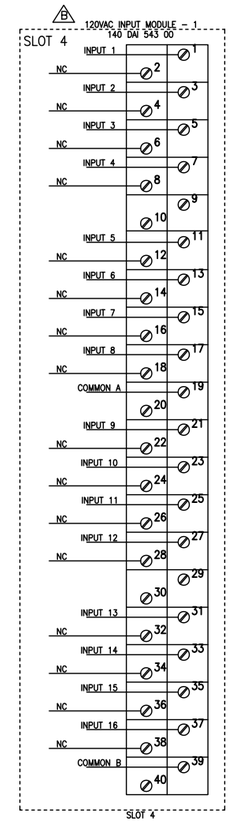

TERMINAL CONNECTOR
140XTS00200

[7A1]
BP54
1=BPTQ-1#18
3=BPTQ-2#18
5=BPTQ-3#18
7=BPTQ-4#18
11=BPTQ-5#18
13=BPTQ-6#18
15=BPTQ-7#18
17=BPTQ-8#18
21=BPTQ-9#18
23=BPTQ-10#18
25=BPTQ-11#18
27=BPTQ-12#18
31=BPTQ-13#18
33=BPTQ-14#18
35=BPTQ-15#18
37=BPTQ-16#18
39=BPTG-5#18
JUMP 19 & 39#18

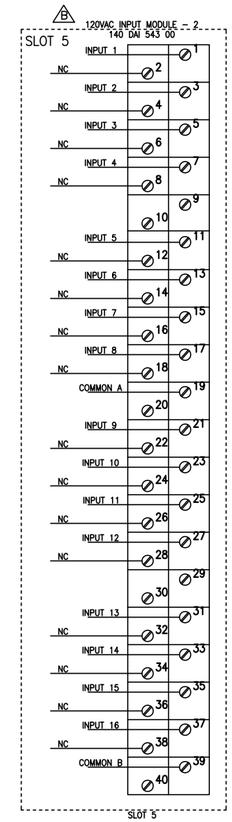

TERMINAL CONNECTOR
140XTS00200

[7A1]
BP55
1=BPTK-1#18
3=BPTK-2#18
5=BPTK-3#18
7=BPTK-4#18
11=BPTK-5#18
13=BPTK-6#18
15=BPTK-7#18
17=BPTK-8#18
21=BPTK-9#18
23=BPTK-10#18
25=BPTK-11#18
27=BPTK-12#18
31=BPTK-13#18
33=BPTK-14#18
35=BPTK-15#18
37=BPTK-16#18
39=BPTG-6#18
JUMP 19 & 39#18

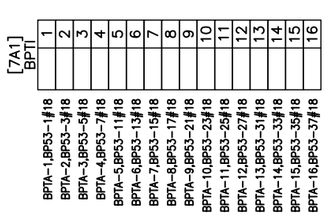

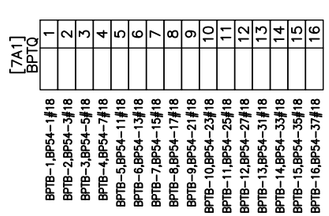

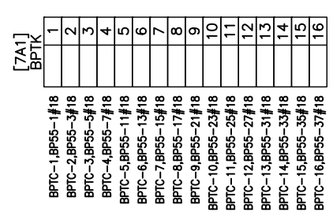

NOTES:
1. PULL APART TERMINAL BLOCKS. TOP OR RIGHT PORTION (MALE WILL BE SCREWED TO THE PAN. BOTTOM OR LEFT PORTION (FEMALE) WILL BE USED ON DOOR HARNESS SEE SHEET 2.
2. ALL COMPONENTS ARE PROVIDED IN PLC I/O ASSEMBLY PZ4-00000-24118

BACK PAN

SECTION 7

JOB NAME:	BUILDING #22 RENOVATIONS	EQUIPMENT DESIGNATION:	SEC SWG A & B NEMA 1
JOB LOCATION:	ALBANY, NY	EQUIPMENT TYPE:	PZ4 SWITCHGEAR
DRAWN BY:	J. JEFFCOAT	DRAWING TYPE:	WIRING DIAGRAM
ENGR:	JJ		SQUARE D Schneider Electric
DATE:	DECEMBER 04, 2006		
DRAWING STATUS:	RECORD	DWG# W21295878-007-07	PG 5 OF 7 REV —

REV	DESCRIPTION	BY	DATE								
A	ETHERNET	JJ	01/17/07	–	----	--	--/--	–	----	--	--/--

CELL A INSTRUMENT COMPARTMENT

10 SLOT
BACKPLANE
140XBP01000

SEE DWG
W-07 PG 7
FOR CONNECTION

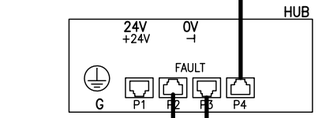

[7A1]
BP25B
0V=BP25A--
24V=BP25A-+
G=[7F4]GND-10

F3A

F3B

990 NAD 230 00
MODBUS+ TAP

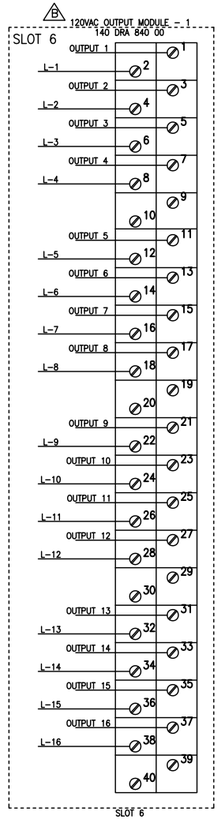

TERMINAL CONNECTOR
140XTS00200

[7A1]
BP57
1=BPTM-1#18
2=BP64-B#18
3=BPTM-2#18
5=BPTM-3#18
6=BP65-B#18
7=BPTM-4#18
11=BPTM-5#18
13=BPTM-6#18
15=BPTM-7#18
17=BPTM-8#18
21=BPTM-9#18
23=BPTM-10#18
25=BPTM-11#18
27=BPTM-12#18
31=BPTM-13#18
33=BPTM-14#18
35=BPTM-15#18
37=BPTM-16#18
JUMP 2 & 4#18
JUMP 6 & 8#18
JUMP 8 & 12#18
JUMP 12 & 14#18
JUMP 14 & 16#18
JUMP 16 & 18#18
JUMP 18 & 22#18
JUMP 22 & 24#18
JUMP 24 & 26#18
JUMP 26 & 28#18
JUMP 28 & 32#18
JUMP 32 & 34#18
JUMP 34 & 36#18
JUMP 36 & 38#18

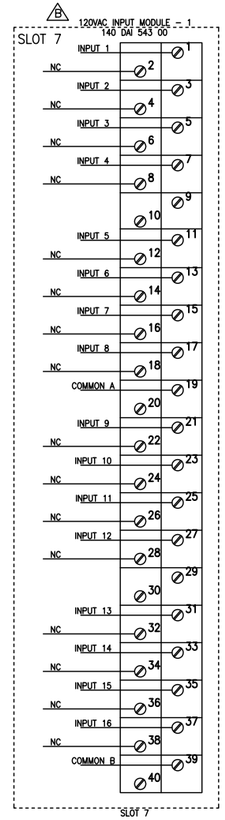

TERMINAL CONNECTOR
140XTS00200

[7A1]
BP56
1=BPTL-1#18
3=BPTL-2#18
5=BPTL-3#18
7=BPTL-4#18
11=BPTL-5#18
13=BPTL-6#18
15=BPTL-7#18
17=BPTL-8#18
21=BPTL-9#18
23=BPTL-10#18
25=BPTL-11#18
27=BPTL-12#18
31=BPTL-13#18
33=BPTL-14#18
35=BPTL-15#18
37=BPTL-16#18
39=BPTG-7#18
JUMP 19 & 39#18

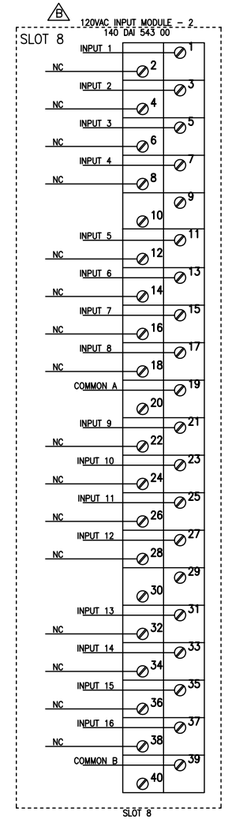

TERMINAL CONNECTOR
140XTS00200

[7A1]
BP58
1=BPTN-1#18
3=BPTN-2#18
5=BPTN-3#18
7=BPTN-4#18
11=BPTN-5#18
13=BPTN-6#18
15=BPTN-7#18
17=BPTN-8#18
21=BPTN-9#18
23=BPTN-10#18
25=BPTN-11#18
27=BPTN-12#18
31=BPTN-13#18
33=BPTN-14#18
35=BPTN-15#18
37=BPTN-16#18
39=BPTG-8

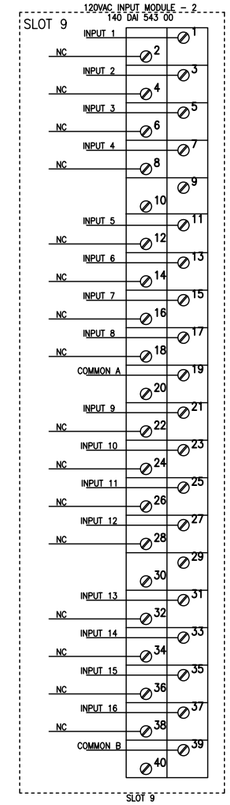

TERMINAL CONNECTOR
140XTS00200

[7A1]
BP59
1=BPTP-1#18
3=BPTP-2#18
5=BPTP-3#18
7=BPTP-4#18
11=BPTP-5#18
13=BPTP-6#18
15=BPTP-7#18
17=BPTP-8#18
21=BPTP-9#18
23=BPTP-10#18
25=BPTP-11#18
27=BPTP-12#18
31=BPTP-13#18
33=BPTP-14#18
35=BPTP-15#18
37=BPTP-16#18
39=BPTG-8

[7A1]
BPTL

1	BPTD-1,BP56-1#18
2	BPTD-2,BP56-3#18
3	BPTD-3,BP56-5#18
4	BPTD-4,BP56-7#18
5	BPTD-5,BP56-11#18
6	BPTD-6,BP56-13#18
7	BPTD-7,BP56-15#18
8	BPTD-8,BP56-17#18
9	BPTD-9,BP56-21#18
10	BPTD-10,BP56-23#18
11	BPTD-11,BP56-25#18
12	BPTD-12,BP56-27#18
13	BPTD-13,BP56-31#18
14	BPTD-14,BP56-33#18
15	BPTD-15,BP56-35#18
16	BPTD-16,BP56-37#18

[7A1]
BPTM

1	BPTE-1,BP57-1#18
2	BPTE-2,BP57-3#18
3	BPTE-3,BP57-5#18
4	BPTE-4,BP57-7#18
5	BPTE-5,BP57-11#18
6	BPTE-6,BP57-13#18
7	BPTE-7,BP57-15#18
8	BPTE-8,BP57-17#18
9	BPTE-9,BP57-21#18
10	BPTE-10,BP57-23#18
11	BPTE-11,BP57-25#18
12	BPTE-12,BP57-27#18
13	BPTE-13,BP57-31#18
14	BPTE-14,BP57-33#18
15	BPTE-15,BP57-35#18
16	BPTE-16,BP57-37#18

[7A1]
BPTN

1	BPTH-1,BP58-1#18
2	BPTH-2,BP58-3#18
3	BPTH-3,BP58-5#18
4	BPTH-4,BP58-7#18
5	BPTH-5,BP58-11#18
6	BPTH-6,BP58-13#18
7	BPTH-7,BP58-15#18
8	BPTH-8,BP58-17#18
9	BPTH-9,BP58-21#18
10	BPTH-11,BP58-23#18
11	BPTH-13,BP58-25#18
12	BPTH-15,BP58-27#18
13	BPTH-17,BP58-31#18
14	BPTH-19,BP58-33#18
15	BPTH-21,BP58-35#18
16	BPTH-23,BP58-37#18

NOTES:
A PULL APART TERMINAL BLOCKS. TOP OR RIGHT PORTION (MALE WILL BE SCREWED TO THE PAN. BOTTOM OR LEFT PORTION (FEMALE) WILL BE USED ON DOOR HARNESS SEE SHEET 2.
B ALL COMPONENTS ARE PROVIDED IN PLC I/O ASSEMBLY PZ4-00000-24118

BACK PAN

SECTION 7

JOB NAME:	BUILDING #22 RENOVATIONS	EQUIPMENT DESIGNATION:	SEC SWG A & B NEMA 1
JOB LOCATION:	ALBANY, NY	EQUIPMENT TYPE:	PZ4 SWITCHGEAR
DRAWN BY:	J. JEFFCOAT	DRAWING TYPE:	WIRING DIAGRAM
ENGR:	JJ		SQUARE D Schneider Electric
DATE:	DECEMBER 04, 2006		
DRAWING STATUS:	RECORD	DWG# W21295878-007-07	PG 6 OF 7 REV A

REV	DESCRIPTION	BY	DATE	B	REVISED TO/FROM WIRING	DRF	10/03/2014	-	----	--	--/--
A	CHANGE USB TO EHTERNET	JJ	01/17/07	-	----	--	--/--	-	----	--	--/--

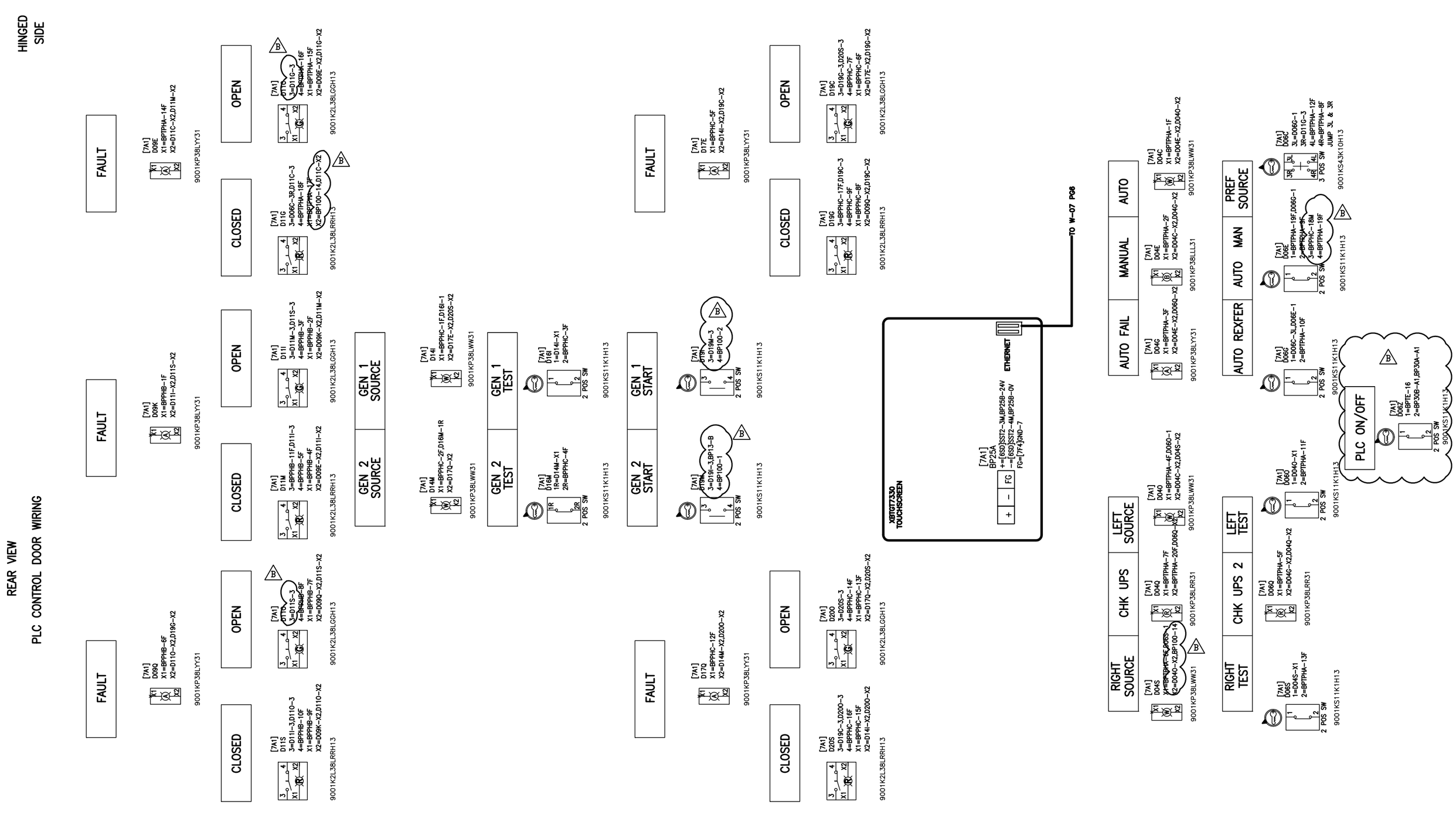

SECTION 7

JOB NAME:	BUILDING #22 RENOVATIONS	EQUIPMENT DESIGNATION:	SEC SWG A & B NEMA 1
JOB LOCATION:	ALBANY, NY	EQUIPMENT TYPE:	PZ4 SWITCHGEAR
DRAWN BY:	J. JEFFCOAT	DRAWING TYPE:	WIRING DIAGRAM
ENGR:	JJ		SQUARE D Schneider Electric
DATE:	DECEMBER 04, 2006		
DRAWING STATUS:	RECORD	DWG# W21295878-007-07	PG 7 OF 7 REV B

REV	DESCRIPTION	BY	DATE	B	REVISE DEVICE LOCATION	TT	02/07/07	–	----	--	--/--
A	NO MB+, ETHERNET ONLY	JJ	01/17/07	–	----	--	--/--	–	----	--	--/--

CELL B INSTRUMENT COMPARTMENT

NOTES:

1. COAXIAL CABLES ARE FABRICATED FROM CABLE 97-5750-000 AND MA-0329-001 'F' CONNECTORS.

A COMPONENTS ARE PROVIDED IN STANDBY CPU ASSEMBLY PZ4-00000-24117

B COMPONENTS ARE PROVIDED IN PRIMARY CPU ASSEMBLY PZ4-00000-24116

C ORIENT LINE IMPEDANCE DEVICES SO TERMINATOR (PLASTIC PROTRUSION) IS TOWARD CRP MODULE. APPLY LABEL TAGS TO COAXIAL CABLES CONNECTED TO CRP MODULE NEAR END THAT CONNECTS TO LINE IMPEDANCE.

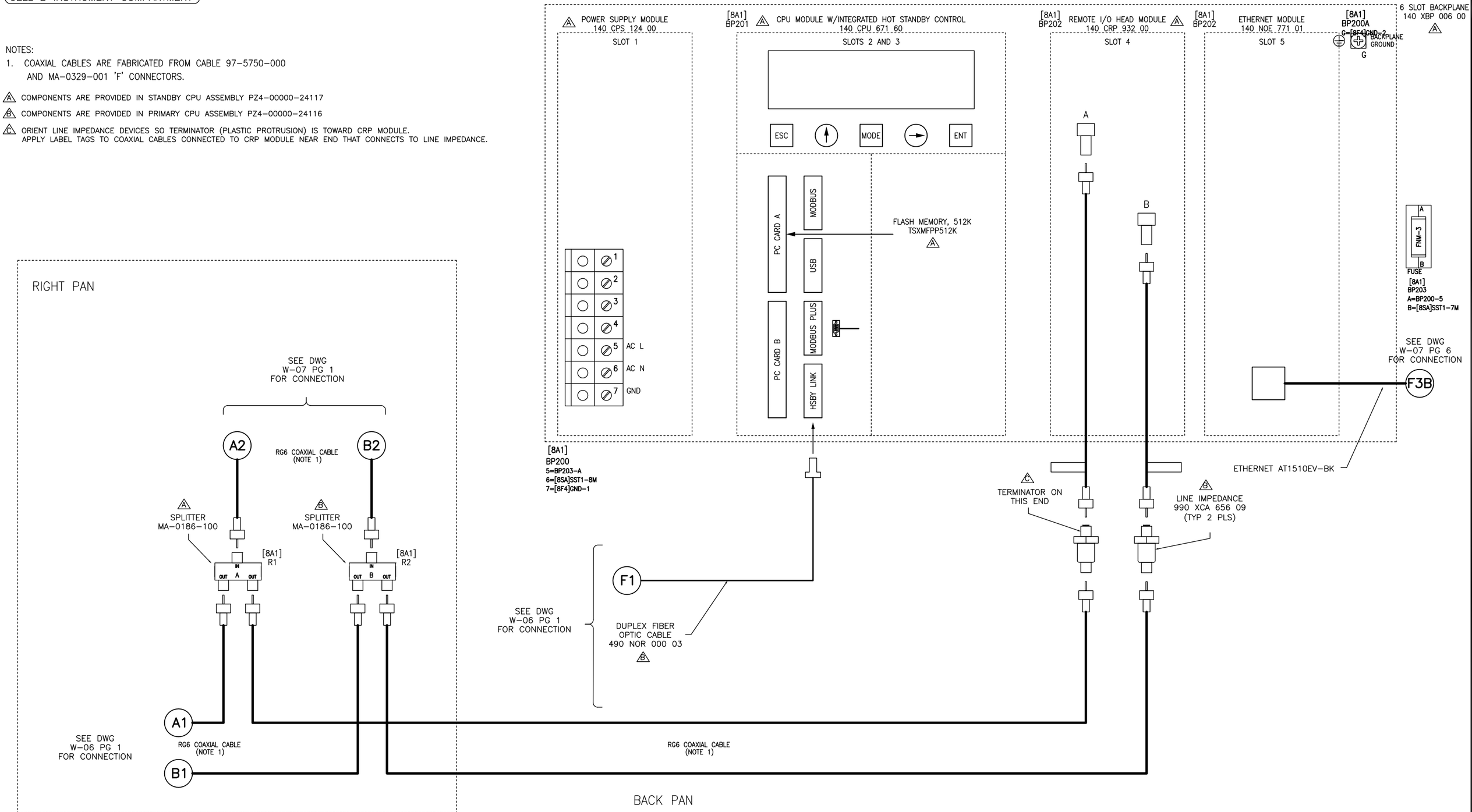

SECTION 8

JOB NAME:	BUILDING #22 RENOVATIONS	EQUIPMENT DESIGNATION:	SEC SWG A & B NEMA 1
JOB LOCATION:	ALBANY, NY	EQUIPMENT TYPE:	PZ4 SWITCHGEAR
DRAWN BY:	J. JEFFCOAT	DRAWING TYPE:	WIRING DIAGRAM
ENGR:	JJ		SQUARE D Schneider Electric
DATE:	DECEMBER 04, 2006		
DRAWING STATUS:	RECORD	DWG# W21295878-007-08	PG 1 OF 2 REV B

REV	DESCRIPTION	BY	DATE							
B	REVISED TO/FROM WIRING	DRF	12/03/2014	–	----	--	--/--
A	ADD 8SA SST2 FOR #8	JJ	02/05/07	–	----	--	--/--	–	----	--	--/--

CELL A INSTRUMENT COMPARTMENT

SEE SHEET 1 FOR WIRING

CELL BC BREAKER COMPARTMENT

START

CD3	BREAKER CELL POSITION 'DISCONNECTED' SQ8009.0	831	832	834
CD2	BREAKER CELL POSITION 'DISCONNECTED' SQ8008.0	821	822	824
CD1	BREAKER CELL POSITION 'DISCONNECTED' SQ8007.0	811	812	814
UC1	MDGF (M1) & ZSI SECONDARIES	Z5	Z3	Z1	M1	Z4	Z2
UC2	MDGF (M2 & M3) & NEUTRAL CT SECONDARIES SQ8019.1	M2	T3	T1	M3	T4	T2
UC3	TRIP UNIT POWER & NEUTRAL VOLTAGE SQ8031.0	F2+	VN	F1–
SDE1	OVERCURRENT TRIP SQ8030.0	81	82	84
CE3	BREAKER CELL POSITION 'CONNECTED' SQ8012.0	331	332	334
CE2	BREAKER CELL POSITION 'CONNECTED' SQ8011.0	321	322	324

[8B1]
BKR
21=[8SA]SST1–32M
31=[8SA]SST1–31M
34=[8SA]SST1–34M
321=[8SA]SST1–33M
JUMP 22 & 34
JUMP 22 & 322

CE1	BREAKER CELL POSITION 'CONNECTED' SQ8010.0	311	312	314
OF4	AUX SWITCH SQ8029.0	41	42	44
OF3	AUX SWITCH SQ8028.0	31	32	34
OF2	AUX SWITCH SQ8027.0	21	22	24
OF1	AUX SWITCH SQ8022.0	11	12	14
CT3	BREAKER CELL POSITION 'TEST' SQ8017.1	931	932	934
CT2	BREAKER CELL POSITION 'TEST' SQ8016.1	921	922	924
CT1	BREAKER CELL POSITION 'TEST' SQ8015.1	911	912	914

CELL D BLANK COMPARTMENT

SEE SHEET 3 FOR WIRING

PULL APART SHIPPING SPLIT TERMINALS

TOP WIREWAY

[8SA]BS8002.1
SST2

[9D1]BPTA–3#8,[9B1]BKR–B2	1M	1F	[7D1]BP27–NB#8,[7D1]X2–N#12
[9D1]BP2–A#8	2M	2F	[7D1]BP1–6R#8
	3M	3F	
	4M	4F	

[8SA]BS8002.1
SST1

[10A1]D01K–N	1M	1F	[7D1]BPTA–3
[10A1]D01K–L	2M	2F	[7D1]BP9–A
[9B1]BKR–B1	3M	3F	[7D1]BP17–A
[10B1]BKR–B1	4M	4F	[7D1]BP18–A
	5M	5F	
	6M	6F	
[8A1]BP203–B	7M	7F	[6A1]BP103–B
[8A1]BP200–6	8M	8F	[7A1]BPTC–11
[9B1]BKR–A2	9M	9F	[7A1]BP30B–72
[9B1]BKR–C2	10M	10F	[7A1]BP30A–72
[9B1]BKR–A1	11M	11F	[6B1]BKR–C1,[7A1]BPTF–1
[9A1]BP1–11	12M	12F	[7A1]BPTPHA–13M
[9A1]BP1–14	13M	13F	[6SA]SST1–21M,[7A1]BPTPHA–19M
[9B1]TB–3	14M	14F	[7A1]BPTC–8
[9B1]BKR–31	15M	15F	[7A1]BPTC–11
[9B1]BKR–21	16M	16F	[7A1]BPTC–12
[9B1]BKR–321	17M	17F	[7A1]BPTC–14
[9B1]TB–5	18M	18F	[6B1]TB–5,[7A1]BP27A–12
[10B1]BKR–31	19M	19F	[7A1]BPTD–11
[10B1]BKR–21	20M	20F	[7A1]BPTD–12
[10B1]BKR–321	21M	21F	[7A1]BPTD–14
[10B1]TB–3	22M	22F	[7A1]BPTD–16
[10B1]BKR–34	23M	23F	[7A1]BP26B–12,[7A1]BP27B–12
[10A1]BP3–11	24M	24F	[7A1]BPPHC–4M
[10B1]BKR–A2	25M	25F	[7A1]BP30B–92
[10B1]BKR–C2	26M	26F	[7A1]BP30A–92
[9D1]BP50–5	27M	27F	[7A1]BPTH–2
[9D1]BP51–5	28M	28F	[7A1]BPTH–4
[9A1]BP52–5	29M	29F	[7A1]BPTH–6
[10A1]BP52–5	30M	30F	[7A1]BPTH–8
[8B1]BKR–31	31M	31F	[7A1]BPTH–9
[8B1]BKR–21	32M	32F	[7A1]BPTH–11
[8B1]BKR–321	33M	33F	[7A1]BPTH–13
[10A1]BP52–9,[8B1]BKR–34	34M	34F	[6SA]SST1–32M,[7A1]BPTH–16
[9B1]BKR–81	35M	35F	[7A1]BP27A–13
[9B1]BKR–41	36M	36F	[7A1]BP27C–13
[10B1]BKR–81	37M	37F	[7A1]BP27B–13
[10B1]BKR–41	38M	38F	[7A1]BP27D–13
[10B1]BKR–84,[9B1]BKR–84	39M	39F	[7A1]BPTX–6
	40M	40F	
	41M	41F	
	42M	42F	
	43M	43F	
	44M	44F	

B

BOTTOM WIREWAY

[8SD]BS8002.1
SST2

[10A1]BP52–14,[9B1]BKR–F2+**WHT	1M	1F	[6B1]TB–17*WHT
[10A1]D05K–2,[9B1]BKR–F1–**GRA	2M	2F	[6B1]TB–19*GRA
[9B1]TA–9*WHT	3M	3F	[6B1]TA–10*WHT
[9B1]TA–11*GRA	4M	4F	[6B1]TA–12*GRA
[9B1]TA–NIN+#22*GRN	5M	5F	[6B1]TA–NIN+#22*GRN
[9B1]TA–NIN–#22*WHT	6M	6F	[6B1]TA–NIN–#22*WHT
[9B1]TA–NOUT+#22*RED	7M	7F	[6B1]TA–NOUT+#22*RED
[9B1]TA–NOUT–#22*BLK	8M	8F	[6B1]TA–NOUT–#22*BLK
[9B1]TA–NSHLD#22*SHLD	9M	9F	[6B1]TA–NSHLD#22*SHLD
[10B1]BPT7–5#22	10M	10F	[6B1]BKR–Z3#22*WHT
[10B1]BPT7–6#22	11M	11F	[6B1]BKR–Z5#22*RED
[9B1]BKR–Z4#22	12M	12F	[6B1]BKR–Z2#22
[11SD]SST2–13F	13M	13F	[6SD]SST2–13M
[11SD]SST2–14F	14M	14F	[6SD]SST2–14M
	15M	15F	
	16M	16F	

BUS / CABLE COMPARTMENT

1	3	5	7	9
2	4	6	8	10

GND BUS SQ8040.0

[8F4]
GND
1=[8A1]BP200–7
2=[8A1]BP200A–G

NOTES:
1. ALL #22 AWG WIRE WITH A COLOR DESIGNATION (RED, BLK, WHT, GRN) IS 8723 4–CONDUCTOR BELDEN CABLE.
2. ALL WIRE DESIGNATIONS INCLUDING A COLOR (GRA, WHT) PLUS A ONE OR TWO DIGIT NUMBER INDICATE A TWISTED PAIR WIRE.
3. ROUTE ALL BELDEN CABLE AND TWISTED PAIR WIRE IN BOTTOM WIREWAY.

SECTION 8

JOB NAME:	BUILDING #22 RENOVATIONS	EQUIPMENT DESIGNATION:	SEC SWG A & B NEMA 1
JOB LOCATION:	ALBANY, NY	EQUIPMENT TYPE:	PZ4 SWITCHGEAR
DRAWN BY:	J. JEFFCOAT	DRAWING TYPE:	WIRING DIAGRAM
ENGR:	JJ		SQUARE D Schneider Electric
DATE:	DECEMBER 04, 2006		
DRAWING STATUS:	RECORD	DWG# W21295878–007–08	PG 2 OF 2 REV B

REV	DESCRIPTION	BY	DATE	—	————	——	——/——	—	————	——	——/——
—	————	——	——/——	—	————	——	——/——	—	————	——	——/——

CELL A INSTRUMENT COMPARTMENT

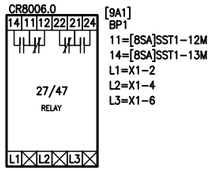

27/47
CONTROL RELAY
CROMPTON
P/N:
252PSGUSEBXC6EB

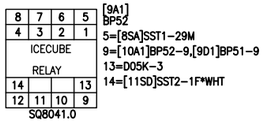

4PDT 5A RELAY
P/N: 8501NR45,
8501RSD14P14V53,
8501NH45

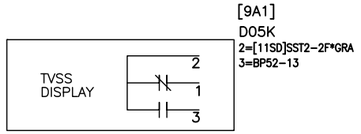

BACK PAN

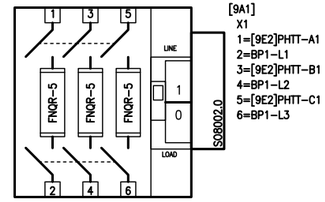

TELEMECHANIQUE
GS1EERU30
30A CC 3 POLE

BOTTOM PAN

RIGHT PAN

NOTES:
A. ALL COMPONENTS ARE PROVIDED IN MAIN BREAKER CONTROL POWER ASSEMBLY 80330-033-51 UNLESS OTHERWISE NOTED.
B. PROVIDED IN CLOSED TRANSFER OPTION ASSEMBLY 80330-046-51.

SECTION 9

JOB NAME:	BUILDING #22 RENOVATIONS	EQUIPMENT DESIGNATION:	SEC SWG A & B NEMA 1
JOB LOCATION:	ALBANY, NY	EQUIPMENT TYPE:	PZ4 SWITCHGEAR
DRAWN BY:	J. JEFFCOAT	DRAWING TYPE:	WIRING DIAGRAM
ENGR:	JJ		SQUARE D Schneider Electric
DATE:	DECEMBER 04, 2006		
DRAWING STATUS:	RECORD	DWG# W21295878-007-09	PG 1 OF 3 REV —

REV	DESCRIPTION	BY	DATE								
A	SST2 ON B2	JJ	02/05/07	B	REVISED TVSS WIRING	TT	02/07/07	–	----	--	--/--
				C	CHANGE PHLB TO PHTB AND PHTB TO PHLB	JJ	02/12/07	–	----	--	--/--

CELL A INSTRUMENT COMPARTMENT

SEE SHEET 1 FOR WIRING

CELL BC BREAKER COMPARTMENT

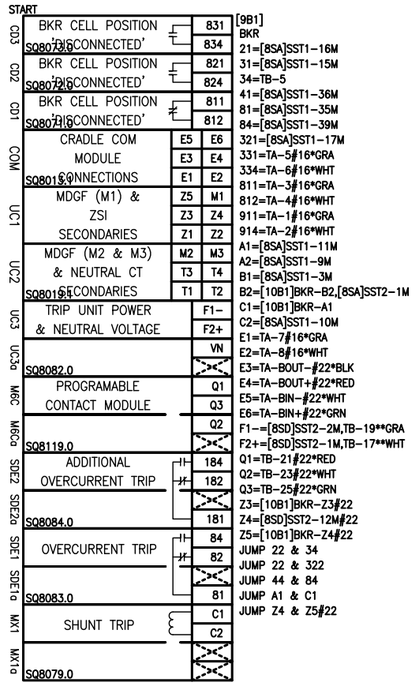

[9B1]
BKR
21=[8SA]SST1–16M
31=[8SA]SST1–15M
34=TB–5
41=[8SA]SST1–36M
81=[8SA]SST1–35M
84=[8SA]SST1–39M
321=[8SA]SST1–17M
331=TA–5#16*GRA
334=TA–6#16*WHT
811=TA–3#16*GRA
812=TA–4#16*WHT
911=TA–1#16*GRA
914=TA–2#16*WHT
A1=[8SA]SST1–11M
A2=[8SA]SST1–9M
B1=[8SA]SST1–3M
B2=[10B1]BKR–B2,[8SA]SST2–1M
C1=[10B1]BKR–A1
C2=[8SA]SST1–10M
E1=TA–7#16*GRA
E2=TA–8#16*WHT
E3=TA–BOUT–#22*BLK
E4=TA–BOUT+#22*RED
E5=TA–BIN–#22*WHT
E6=TA–BIN+#22*GRN
F1–=[8SD]SST2–2M,TB–19**GRA
F2+=[8SD]SST2–1M,TB–17**WHT
Q1=TB–21#22*RED
Q2=TB–23#22*WHT
Q3=TB–25#22*GRN
Z3=[10B1]BKR–Z3#22
Z4=[8SD]SST2–12M#22
Z5=[10B1]BKR–Z4#22
JUMP 22 & 34
JUMP 22 & 322
JUMP 44 & 84
JUMP A1 & C1
JUMP Z4 & Z5#22

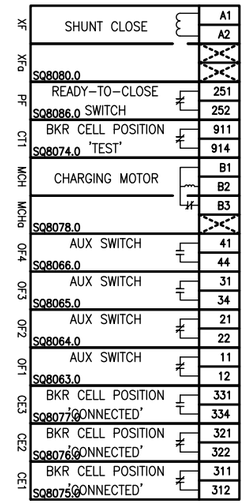

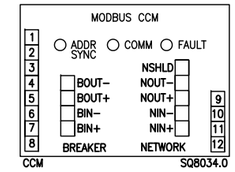

[9B1]
TA
1=BKR–911#16*GRA
2=BKR–914#16*WHT
3=BKR–811#16*GRA
4=BKR–812#16*WHT
5=BKR–331#16*GRA
6=BKR–334#16*WHT
7=BKR–E1#16*GRA
8=BKR–E2#16*WHT
9=[8SD]SST2–3M*WHT
10=[10A1]BPTCN2–6*WHT
11=[8SD]SST2–4M*GRA
12=[10A1]BPTCN2–7*GRA
BIN+=BKR–E6#22*GRN
BIN–=BKR–E5#22*WHT
BOUT+=BKR–E4#22*RED
BOUT–=BKR–E3#22*BLK
NIN+=[10A1]BPTCN2–1,[8SD]SST2–5M##22**GRN
NIN–=[10A1]BPTCN2–2,[8SD]SST2–6M##22**WHT
NOUT+=[10A1]BPTCN2–3,[8SD]SST2–7M##22**RED
NOUT–=[10A1]BPTCN2–4,[8SD]SST2–8M##22**BLK
NSHLD=[10A1]BPTCN2–5,[8SD]SST2–9M##22**SHLD

[9B1]
CDL
G=WIRE–S#22*SHLD

CHASSIS GROUND
G

SHIELD FOR M6C WIRE

[9B1]
WIRE
S=CDL–G#22*SHLD

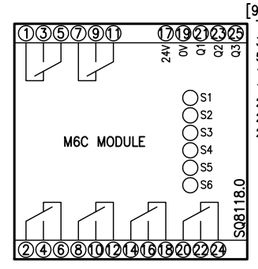

[9B1]
TB
3=[8SA]SST1–14M
5=[8SA]SST1–18M,BKR–34
17=[10B1]BKR–F2+,BKR–F2+**WHT
19=[10B1]BKR–F1–,BKR–F1–**GRA
21=BKR–Q1#22*RED
23=BKR–Q2#22*WHT
25=BKR–Q3#22*GRN

CELL D BLANK COMPARTMENT

SEE SHEET 3 FOR WIRING

BUS / CABLE COMPARTMENT

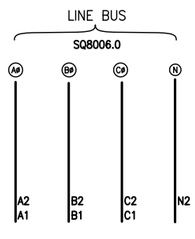

[9E2]
PHTT
A1=[9F4]BP1–1#10,[9A1]X1–1
A2=[9F2]X8–A#12*BLK
B1=[9F4]BP1–3#10,[9A1]X1–3
B2=[9F2]X8–B#12*BLK
C1=[9A1]X1–5
C2=[9F2]X8–C#12*BLK

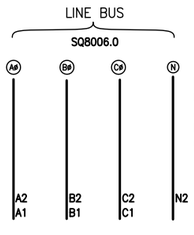

[9E3]
PHTB
A2=[9F4]R1–2#6*GRA/BRN
B2=[9F4]R1–4#6*GRA/ORN
C2=[9F4]R1–6#6*GRA/YEL

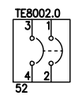

[9F4]
BP1
1=[9E2]PHTT–A1#10
2=BP2–H1#10
3=[9E2]PHTT–B1#10
4=BP2–H4#10

2 POLE 30A DISCONNECT
P/N: FIL26030

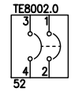

[9F4]
BP1A
1=[10F3]PHLB–A1#10
2=BP2A–H1#10
3=[10F3]PHLB–B1#10
4=BP2A–H4#10

INSTALL FACTORY JUMPER

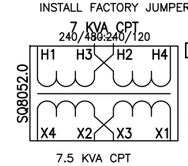

7.5 KVA CPT
240/480–240/120
VAC
CONTROL POWER
TRANSFORMER
P/N: 7S1HFOC

INSTALL FACTORY JUMPER

[9F4]
BP2
H1=BP1–2#10
H4=BP1–4#10
X1=BP3–A#8
X2=GND–1#8
X4=[9D1]BPTA–4#8
JUMP H2 & H3#10
JUMP X1 & X3#8
JUMP X2 & X4#8

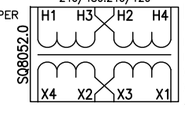

[9F4]
BP2A
H1=BP1A–2#10
H4=BP1A–4#10
X1=BP3A–A#8
X4=[9D1]BPTA–5#8
JUMP H2 & H3#10
JUMP X1 & X3#8
JUMP X2 & X4#8

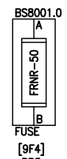

[9F4]
BP3
A=BP2–X1#8
B=[9D1]BPTA–1#8

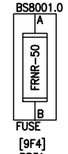

[9F4]
BP3A
A=BP2A–X1#8
B=[9D1]BPTA–2#8

PHASE, NEUTRAL, AND GND CONDUCTORS MUST BE TWISTED TOGETHER WITH A WIRE LENGTH LESS THAN 8 FT.

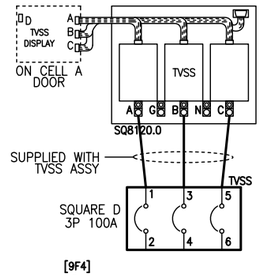

[9F4]
R1
2=[9E3]PHTB–A2#6*GRA/BRN
4=[9E3]PHTB–B2#6*GRA/ORN
6=[9E3]PHTB–C2#6*GRA/YEL
G=GND–2#6
N=GND–3#6

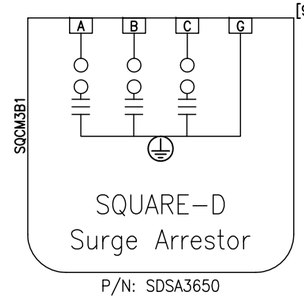

P/N: SDSA3650

[9F2]
X8
A=[9E2]PHTT–A2#12*BLK
B=[9E2]PHTT–B2#12*BLK
C=[9E2]PHTT–C2#12*BLK
G=[9F4]GND–9#12*WHT

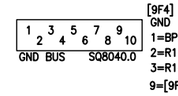

[9F4]
GND
1=BP2–X2#8
2=R1–G#6
3=R1–N#6
9=[9F2]X8–G#12*WHT

NOTES:
1. ALL #22 AWG WIRE WITH A COLOR DESIGNATION (RED, BLK, WHT, GRN) IS 8723 4–CONDUCTOR BELDEN CABLE.
2. ALL WIRE DESIGNATIONS INCLUDING A COLOR (GRA, WHT) PLUS A ONE OR TWO DIGIT NUMBER INDICATE A TWISTED PAIR WIRE.
3. ROUTE ALL BELDEN CABLE AND TWISTED PAIR WIRE IN BOTTOM WIREWAY.

SECTION 9

JOB NAME:	BUILDING #22 RENOVATIONS	EQUIPMENT DESIGNATION:	SEC SWG A & B NEMA 1
JOB LOCATION:	ALBANY, NY	EQUIPMENT TYPE:	PZ4 SWITCHGEAR
DRAWN BY:	J. JEFFCOAT	DRAWING TYPE:	WIRING DIAGRAM
ENGR:	JJ		SQUARE D Schneider Electric
DATE:	DECEMBER 04, 2006		
DRAWING STATUS:	RECORD	DWG# W21295878–007–09	PG 2 OF 3 REV C

REV	DESCRIPTION	BY	DATE							
A	SST2 ON 9D1 BP2	JJ	02/05/07	–	----	--	--/--	–	----	-- --/--

CELL D INSTRUMENT COMPARTMENT

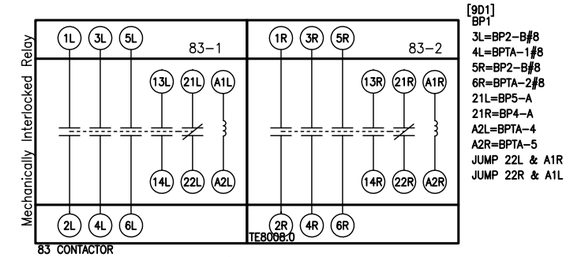

120 VAC 50/70A
REVERSING
CONTACTOR
P/N: LC2D50G7

G1
CONTROL POWER
FAILURE RELAY

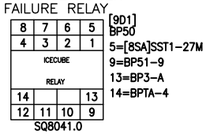

[9D1]
BP50
5=[8SA]SST1-27M
9=BP51-9
13=BP3-A
14=BPTA-4

4PDT 5A RELAY
P/N: 8501NR45,
8501RS14P14V20,
8501NH45

M1
CONTROL POWER
FAILURE RELAY

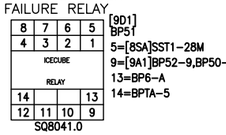

[9D1]
BP51
5=[8SA]SST1-28M
9=[9A1]BP52-9,BP50-9
13=BP6-A
14=BPTA-5

4PDT 5A RELAY
P/N: 8501NR45,
8501RS14P14V20,
8501NH45

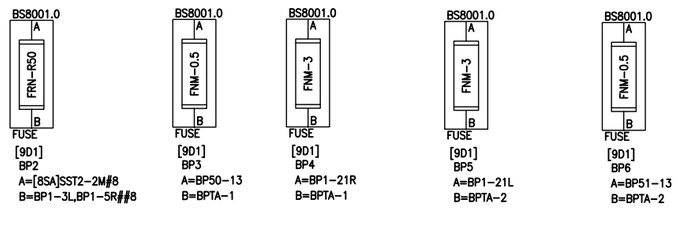

BACK PAN

BOTTOM PAN

RIGHT PAN

NOTES:
A ALL COMPONENTS ARE PROVIDED IN MAIN BREAKER CONTROL POWER ASSEMBLY 80330-033-51 UNLESS OTHERWISE NOTED.
B PROVIDED IN CLOSED TRANSFER OPTION ASSEMBLY 80330-046-51.

SECTION 9

JOB NAME:	BUILDING #22 RENOVATIONS	EQUIPMENT DESIGNATION:	SEC SWG A & B NEMA 1
JOB LOCATION:	ALBANY, NY	EQUIPMENT TYPE:	PZ4 SWITCHGEAR
DRAWN BY:	J. JEFFCOAT	DRAWING TYPE:	WIRING DIAGRAM
ENGR:	JJ		SQUARE D Schneider Electric
DATE:	DECEMBER 04, 2006		
DRAWING STATUS:	RECORD	DWG# W21295878-007-09	PG 3 OF 3 REV A

REV	DESCRIPTION	BY	DATE	B	PHTB	JJ	02/19/07	–	----	--	--/--
A	CHANGE PHLB TO PHTB AND PHTB TO PHLB	JJ	02/12/07	–	----	--	--/--	–	----	--	--/--

CELL A INSTRUMENT COMPARTMENT

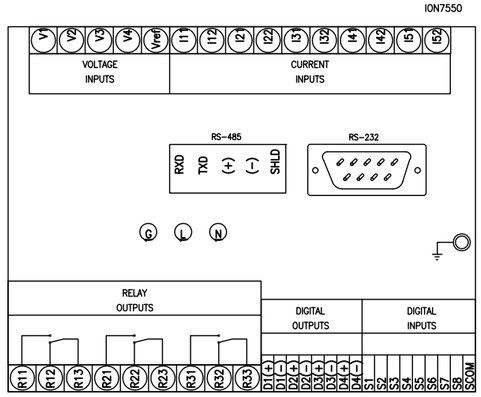

[10A1]
D01K
(+)=BP23-+ (2)#22*RED
(-)=BP23-- (2)#22*BLK
G=[10F4]GND-4#12
I11=D05Z-2
I12=D05Z-8
I21=D05Z-4
I31=D05Z-6
I52=[10F4]GND-5#12
L=[8SA]SST1-2M
N=[8SA]SST1-1M
SHLD=BP23-SHLD (2)#22*SHLD
V1=D04Z-2
V2=D04Z-4
V3=D04Z-6
JUMP I12 & I22
JUMP I22 & I32
JUMP I32 & I41
JUMP I41 & I42
JUMP I42 & I51
JUMP I51 & I52
JUMP V2 & V4
JUMP V4 & Vref

[10A1]
D05K
2=[8SD]SST2-2M*GRA
3=BP52-13

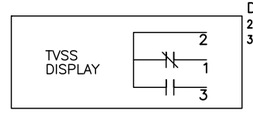

TEST BLOCK
P/N: 6422120G3
P/N: 6129533G1
AMPS – XMFR

GM0027.0

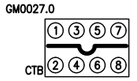

[10A1]
D05Z
1=[10B1]STA-1A
2=D01K-I11
3=[10B1]STA-3A
4=D01K-I21
5=[10B1]STA-5A
6=D01K-I31
7=[10B1]STA-6A
8=D01K-I12

TEST BLOCK
P/N: 6422120G3
P/N: 6129533G1
VOLTS

GM0027.0

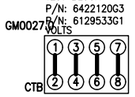

[10A1]
D04Z
1=X21-X1
2=D01K-V1
3=X21-X2
4=D01K-V2
5=X22-X2
6=D01K-V3

DOOR

CR8006.0

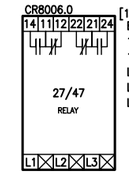

[10A1]
BP1
11=BP2-24
14=[10B1]TB-5
L1=BP2-L1,X1-2
L2=BP3-L2,X1-4
L3=BP2-L2,X1-6

27/47
CONTROL RELAY
CROMPTON
P/N:
252PSGUSEBXC6EB

CR8001.0

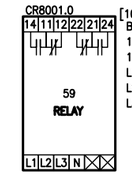

[10A1]
BP3
11=[8SA]SST1-24M
14=BP2-11
L1=BP2-L1
L2=BP1-L2
L3=BP2-L2

81 O/U
CONTROL RELAY
CROMPTON
P/N:
253PHDUSEBXC6EE

CR8002.0

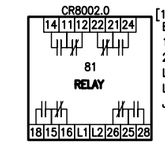

[10A1]
BP2
11=BP3-14
24=BP1-11
L1=BP1-L1,BP3-L1
L2=BP1-L3,BP3-L3
JUMP 14 & 21

59
CONTROL RELAY
CROMPTON
P/N:
252PVAUSEBXC6EB

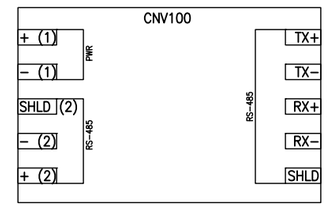

[10A1]
BP23
+ (1)=BPTCN2-6
+ (2)=D01K-(+)#22*RED
– (1)=BPTCN2-7
– (2)=D01K-(–)#22*BLK
RX+=BPTCN2-3#22
RX–=BPTCN2-4#22
SHLD=BPTCN2-5#22
SHLD (2)=D01K-SHLD#22*SHLD
TX+=BPTCN2-1#22
TX–=BPTCN2-2#22

[10A1]
BPTCN2

1	2	3	4	5	6	7
BP23-TX+#22	BP23-TX-#22	BP23-RX+#22	BP23-RX-#22	BP23-SHLD#22	BP23-+ (1)	BP23-– (1)

SQ8005.1

1	2	3	4	5	6	7
[10B1]TA-NIN+,[9B1]TA-NIN+##22*GRN	[10B1]TA-NIN-,[9B1]TA-NIN-##22*WHT	[10B1]TA-NOUT+,[9B1]TA-NOUT+##22*RED	[10B1]TA-NOUT-,[9B1]TA-NOUT-##22*BLK	[10B1]TA-NSHLD,[9B1]TA-NSHLD#22*SHLD	[10B1]TA-9,[9B1]TA-10**WHT	[10B1]TA-11,[9B1]TA-12**GRA

[10A1]
BP52

8	7	6	5
4	3	2	1
ICECUBE RELAY			
14			13
12	11	10	9

SQ8041.0

5=[8SA]SST1-30M
9=[8SA]SST1-34M,[9A1]BP52-9
13=D05K-3
14=[8SD]SST2-1M*WHT

4PDT 5A RELAY
P/N: 8501NR45,
8501RSD14P14V53,
8501NH45

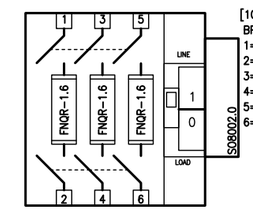

[10A1]
BP20
1=[10E3]PHTB-A1
2=X21-H1
3=[10E3]PHTB-B1
4=X21-H2
5=[10E3]PHTB-C1
6=X22-H2

TELEMECHANIQUE
GS1EERU30
30A CC 3 POLE

BACK PAN

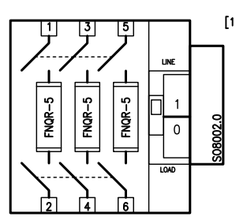

[10A1]
X1
1=[10F3]PHLB-A1
2=BP1-L1
3=[10F3]PHLB-B1
4=BP1-L2
5=[10F3]PHLB-C1
6=BP1-L3

△A TELEMECHANIQUE
GS1EERU30
30A CC 3 POLE

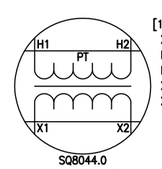

[10A1]
X21
H1=BP20-2
H2=BP20-4,X22-H1
X1=D04Z-1
X2=X22-X1#12,D04Z-3

SQ8044.0
150 VA PT
480–120 VAC
POTENTIAL
TRANSFORMER
P/N: 460R-480

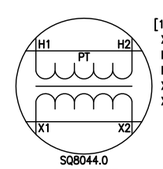

[10A1]
X22
H1=X21-H2
H2=BP20-6
X1=X21-X2,[10F4]GND-1##12
X2=D04Z-5

SQ8044.0
150 VA PT
480–120 VAC
POTENTIAL
TRANSFORMER
P/N: 460R-480

BOTTOM PAN

RIGHT PAN

NOTES:
△A ALL COMPONENTS ARE PROVIDED IN MAIN BREAKER CONTROL POWER ASSEMBLY 80330-033-51 UNLESS OTHERWISE NOTED.
△B PROVIDED IN CLOSED TRANSFER OPTION ASSEMBLY 80330-046-51.
△C PROVIDED IN CLOSED TRANSFER RELAY ASSEMBLY 80330-046-52.

SECTION 10

JOB NAME:	BUILDING #22 RENOVATIONS	EQUIPMENT DESIGNATION:	SEC SWG A & B NEMA 1
JOB LOCATION:	ALBANY, NY	EQUIPMENT TYPE:	PZ4 SWITCHGEAR
DRAWN BY:	J. JEFFCOAT	DRAWING TYPE:	WIRING DIAGRAM
ENGR:	JJ		SQUARE D Schneider Electric
DATE:	DECEMBER 04, 2006		
DRAWING STATUS:	RECORD	DWG# W21295878-007-10	PG 1 OF 3 REV B

REV	DESCRIPTION	BY	DATE							
A	REVISED TVSS WIRING	TT	02/07/07	B	CHANGE PHLB TO PHTB AND PHTB TO PHLB	JJ	02/12/07	–	----	--/--
				C	PHTB	JJ	02/19/07	–	----	--/--

CELL A INSTRUMENT COMPARTMENT

SEE SHEET 1 FOR WIRING

CELL BC BREAKER COMPARTMENT

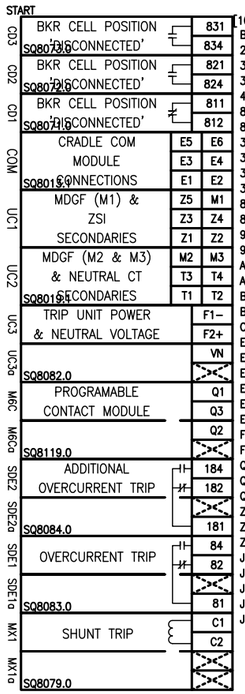

[10B1]
BKR
21=[8SA]SST1-20M
31=[8SA]SST1-19M
34=[8SA]SST1-23M
41=[8SA]SST1-38M
81=[8SA]SST1-37M
84=[8SA]SST1-39M
321=[8SA]SST1-21M
322=TB-5
331=TA-5#16*GRA
334=TA-6#16*WHT
811=TA-3#16*GRA
812=TA-4#16*WHT
911=TA-1#16*GRA
914=TA-2#16*WHT
A1=[9B1]BKR-C1
A2=[8SA]SST1-25M
B1=[8SA]SST1-4M
B2=[9B1]BKR-B2
C2=[8SA]SST1-26M
E1=TA-7#16*GRA
E2=TA-8#16*WHT
E3=TA-BOUT-#22*BLK
E4=TA-BOUT+#22*RED
E5=TA-BIN-#22*WHT
E6=TA-BIN+#22*GRN
F1-=TB-19,[9B1]TB-19**GRA
F2+=TB-17,[9B1]TB-17**WHT
Q1=TB-21#22*RED
Q2=TB-23#22*WHT
Q3=TB-25#22*GRN
Z3=BPT7-5,[9B1]BKR-Z3##22
Z4=[9B1]BKR-Z5#22
Z5=BPT7-3#22*RED
JUMP 22 & 34
JUMP 22 & 322
JUMP 44 & 84
JUMP A1 & C1
JUMP Z4 & Z5#22

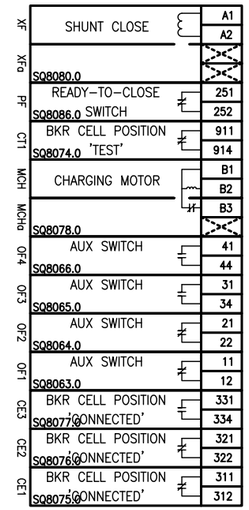

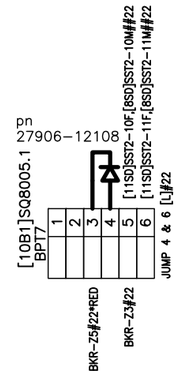

CELL D INSTRUMENT COMPARTMENT

SEE SHEET 3 FOR WIRING

TOP BARRIER

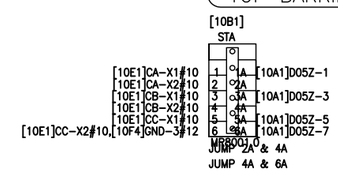

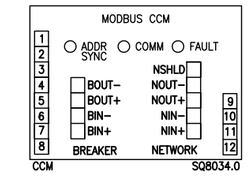

[10B1]
TA
1=BKR-911#16*GRA
2=BKR-914#16*WHT
3=BKR-811#16*GRA
4=BKR-812#16*WHT
5=BKR-331#16*GRA
6=BKR-334#16*WHT
7=BKR-E1#16*GRA
8=BKR-E2#16*WHT
9=[10A1]BPTCN2-6*WHT
10=[11SD]SST2-3F*WHT
11=[10A1]BPTCN2-7*GRA
12=[11SD]SST2-4F*GRA
BIN+=BKR-E6#22*GRN
BIN-=BKR-E5#22*WHT
BOUT+=BKR-E4#22*RED
BOUT-=BKR-E3#22*BLK
NIN+=[10A1]BPTCN2-1,[11SD]SST2-5F##22**GRN
NIN-=[10A1]BPTCN2-2,[11SD]SST2-6F##22**WHT
NOUT+=[10A1]BPTCN2-3,[11SD]SST2-7F##22**RED
NOUT-=[10A1]BPTCN2-4,[11SD]SST2-8F##22**BLK
NSHLD=[10A1]BPTCN2-5,[11SD]SST2-9F##22**SHLD

METERING CT'S
3200 : 5

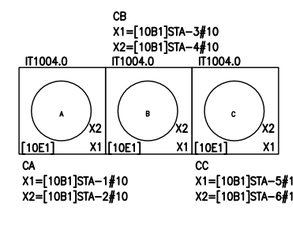

XBUS

[10B1]
CDL
G=WIRE-S#22*SHLD

SHIELD FOR M6C WIRE

[10B1]
WIRE
S=CDL-G#22*SHLD

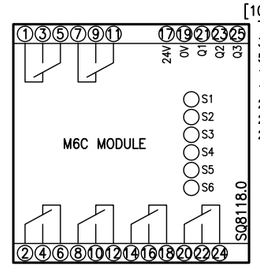

[10B1]
TB
3=[8SA]SST1-22M
5=[10A1]BP1-14,BKR-322
17=BKR-F2+,[11SD]SST2-1F**WHT
19=BKR-F1-,[11SD]SST2-2F**GRA
21=BKR-Q1#22*RED
23=BKR-Q2#22*WHT
25=BKR-Q3#22*GRN

PHASE, NEUTRAL, AND GND CONDUCTORS MUST BE TWISTED TOGETHER WITH A WIRE LENGTH LESS THAN 8 FT.

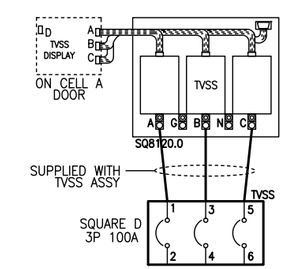

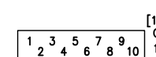

[10F4]
GND
1=[10A1]X22-X1#12
2=R1-N#6
3=[10B1]STA-6#12
4=[10A1]D01K-G#12
5=[10A1]D01K-I52#12
6=[10D1]X24-X1#12
7=[10D1]X21B-X1#12
10=R1-G#6

[10F4]
R1
2=[10E3]PHTB-A2#6*GRA/BRN
4=[10E3]PHTB-B2#6*GRA/ORN
6=[10E3]PHTB-C2#6*GRA/YEL
G=GND-10#6
N=GND-2#6

BUS / CABLE COMPARTMENT

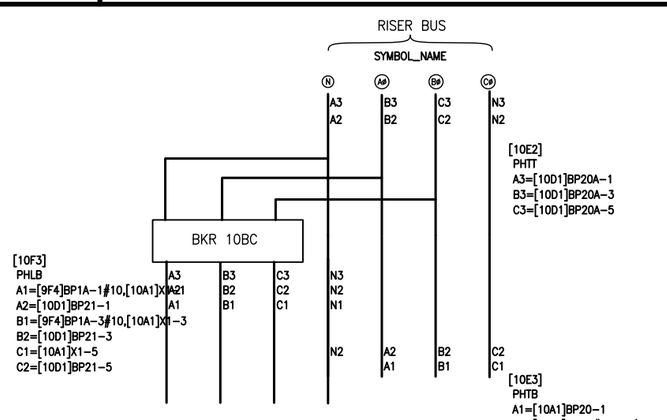

[10E2]
PHTT
A3=[10D1]BP20A-1
B3=[10D1]BP20A-3
C3=[10D1]BP20A-5

[10F3]
PHLB
A1=[9F4]BP1A-1#10,[10A1]X1-21
A2=[10D1]BP21-1
B1=[9F4]BP1A-3#10,[10A1]X1-3
B2=[10D1]BP21-3
C1=[10A1]X1-5
C2=[10D1]BP21-5

[10E3]
PHTB
A1=[10A1]BP20-1
A2=[10F4]R1-2#6*GRA/BRN
B1=[10A1]BP20-3
B2=[10F4]R1-4#6*GRA/ORN
C1=[10A1]BP20-5
C2=[10F4]R1-6#6*GRA/YEL

NOTES:
1. ALL #22 AWG WIRE WITH A COLOR DESIGNATION (RED, BLK, WHT, GRN) IS 8723 4-CONDUCTOR BELDEN CABLE.
2. ALL WIRE DESIGNATIONS INCLUDING A COLOR (GRA, WHT) PLUS A ONE OR TWO DIGIT NUMBER INDICATE A TWISTED PAIR WIRE.
3. ROUTE ALL BELDEN CABLE AND TWISTED PAIR WIRE IN BOTTOM WIREWAY.

SECTION 10

JOB NAME:	BUILDING #22 RENOVATIONS	EQUIPMENT DESIGNATION:	SEC SWG A & B NEMA 1
JOB LOCATION:	ALBANY, NY	EQUIPMENT TYPE:	PZ4 SWITCHGEAR
DRAWN BY:	J. JEFFCOAT	DRAWING TYPE:	WIRING DIAGRAM
ENGR:	JJ		SQUARE D Schneider Electric
DATE:	DECEMBER 04, 2006		
DRAWING STATUS:	RECORD	DWG# W21295878-007-10	PG 2 OF 3 REV C

REV	DESCRIPTION	BY	DATE	–	----	--	--/--	–	----	--	--/--
A	CHANGE PHLB TO PHTB AND PHTB TO PHLB	JJ	02/12/07	–	----	--	--/--	–	----	--	--/--

CELL D INSTRUMENT COMPARTMENT

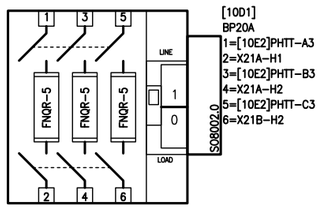

TELEMECHANIQUE
GS1EERU30
30A CC 3 POLE

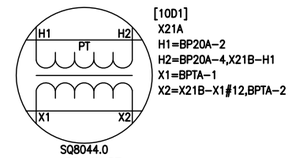

SQ8044.0
150 VA PT
480-120 VAC
POTENTIAL
TRANSFORMER
P/N: 460R-480

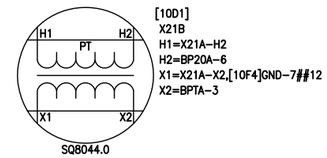

SQ8044.0
150 VA PT
480-120 VAC
POTENTIAL
TRANSFORMER
P/N: 460R-480

[10D1]SQ8005.1
BPTA

X21A-X1	1
X21A-X2	2
X21B-X2	3
X23-X1	4
X23-X2	5
X24-X2	6

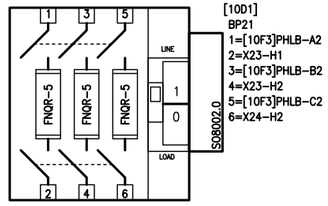

TELEMECHANIQUE
GS1EERU30
30A CC 3 POLE

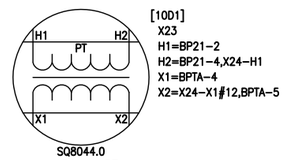

SQ8044.0
150 VA PT
480-120 VAC
POTENTIAL
TRANSFORMER
P/N: 460R-480

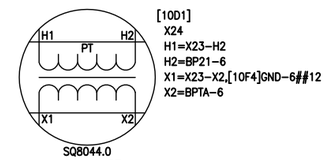

SQ8044.0
150 VA PT
480-120 VAC
POTENTIAL
TRANSFORMER
P/N: 460R-480

NOTES:
A. ALL COMPONENTS ARE PROVIDED IN MAIN BREAKER CONTROL POWER ASSEMBLY 80330-033-51 UNLESS OTHERWISE NOTED.
B. PROVIDED IN CLOSED TRANSFER OPTION ASSEMBLY 80330-046-51.
C. PROVIDED IN CLOSED TRANSFER RELAY ASSEMBLY 80330-046-52.

SECTION 10

JOB NAME:	BUILDING #22 RENOVATIONS	EQUIPMENT DESIGNATION:	SEC SWG A & B NEMA 1
JOB LOCATION:	ALBANY, NY	EQUIPMENT TYPE:	PZ4 SWITCHGEAR
DRAWN BY:	J. JEFFCOAT	DRAWING TYPE:	WIRING DIAGRAM
ENGR:	JJ		SQUARE D Schneider Electric
DATE:	DECEMBER 04, 2006		
DRAWING STATUS:	RECORD	DWG# W21295878-007-10	PG 3 OF 3 REV A

REV	DESCRIPTION	BY	DATE						
A	ADD 24V TO M6C	JJ	02/22/07	–	----	--	--/--/--	–	----	--	--/--/--
				–	----	--	--/--/--	–	----	--	--/--/--

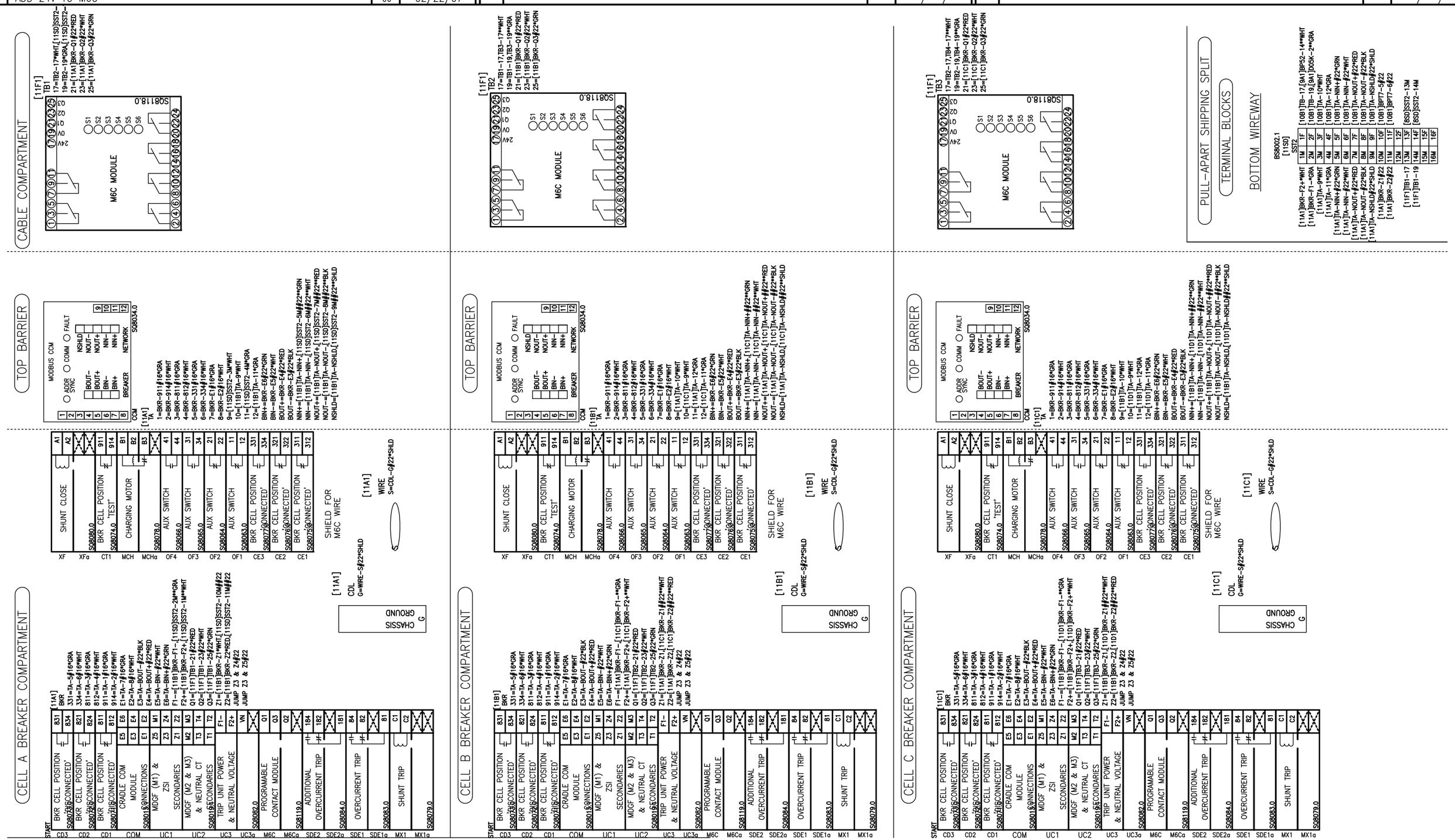

NOTES

1. ALL #22 AWG WIRE WITH A COLOR DESIGNATION (RED, BLK, WHT, GRN) IS 8723 4-CONDUCTOR BELDEN CABLE.
2. ALL WIRE DESIGNATIONS INCLUDING A COLOR (GRA, WHT) PLUS A ONE OR TWO DIGIT NUMBER INDICATE A TWISTED PAIR. FOR EXAMPLE, GRA70 AND WHT70 MAKE UP A SINGLE TWISTED PAIR WIRE.
3. ROUTE ALL BELDEN CABLE AND TWISTED PAIR WIRE IN BOTTOM WIREWAY.

SECTION 11

JOB NAME:	BUILDING #22 RENOVATIONS	EQUIPMENT DESIGNATION:	SEC SWG A & B NEMA 1
JOB LOCATION:	ALBANY, NY	EQUIPMENT TYPE:	PZ4 SWITCHGEAR
DRAWN BY:	J. BROWN	DRAWING TYPE:	WIRING DIAGRAM
ENGR:	JJ		SQUARE D Schneider Electric
DATE:	DECEMBER 04, 2006		
DRAWING STATUS:	RECORD	DWG# W21295878-007-11	PG 1 OF 2 REV A

REV	DESCRIPTION	BY	DATE								
A	ADD 24V TO M6C	JJ	02/22/07	–	----	--	--/--/--	–	----	--	--/--/--

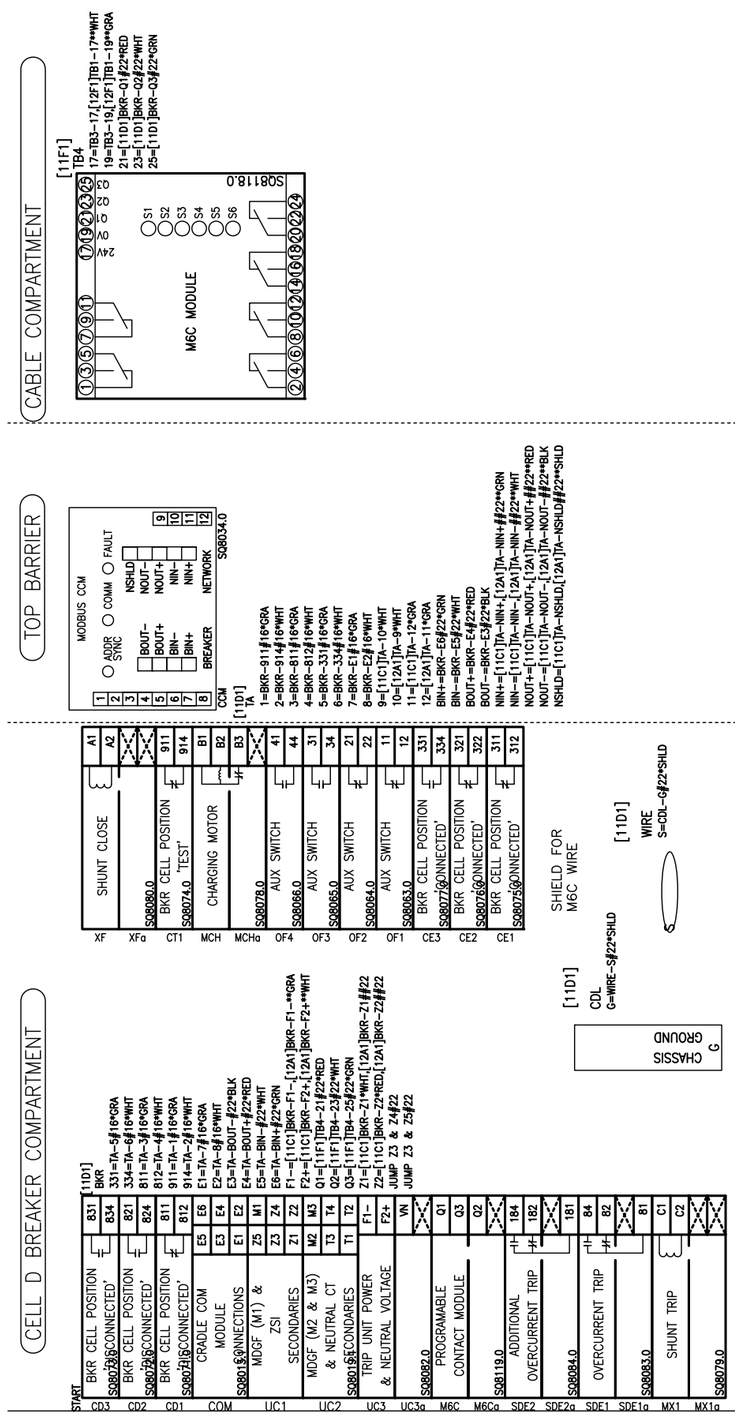

NOTES

1. ALL #22 AWG WIRE WITH A COLOR DESIGNATION (RED, BLK, WHT, GRN) IS 8723 4-CONDUCTOR BELDEN CABLE.
2. ALL WIRE DESIGNATIONS INCLUDING A COLOR (GRA, WHT) PLUS A ONE OR TWO DIGIT NUMBER INDICATE A TWISTED PAIR. FOR EXAMPLE, GRA70 AND WHT70 MAKE UP A SINGLE TWISTED PAIR WIRE.
3. ROUTE ALL BELDEN CABLE AND TWISTED PAIR WIRE IN BOTTOM WIREWAY.

SECTION 11

JOB NAME:	BUILDING #22 RENOVATIONS	EQUIPMENT DESIGNATION:	SEC SWG A & B NEMA 1
JOB LOCATION:	ALBANY, NY	EQUIPMENT TYPE:	PZ4 SWITCHGEAR
DRAWN BY:	J. BROWN	DRAWING TYPE:	WIRING DIAGRAM
ENGR:	JJ		SQUARE D Schneider Electric
DATE:	DECEMBER 04, 2006		
DRAWING STATUS:	RECORD	DWG# W21295878-007-11	PG 2 OF 2 REV A

REV	DESCRIPTION	BY	DATE									
A	ADD 24V TO M6C	JJ	02/22/07	–	----	--	--/--/--	–	----	--	--/--/--
				–	----	--	--/--/--	–	----	--	--/--/--

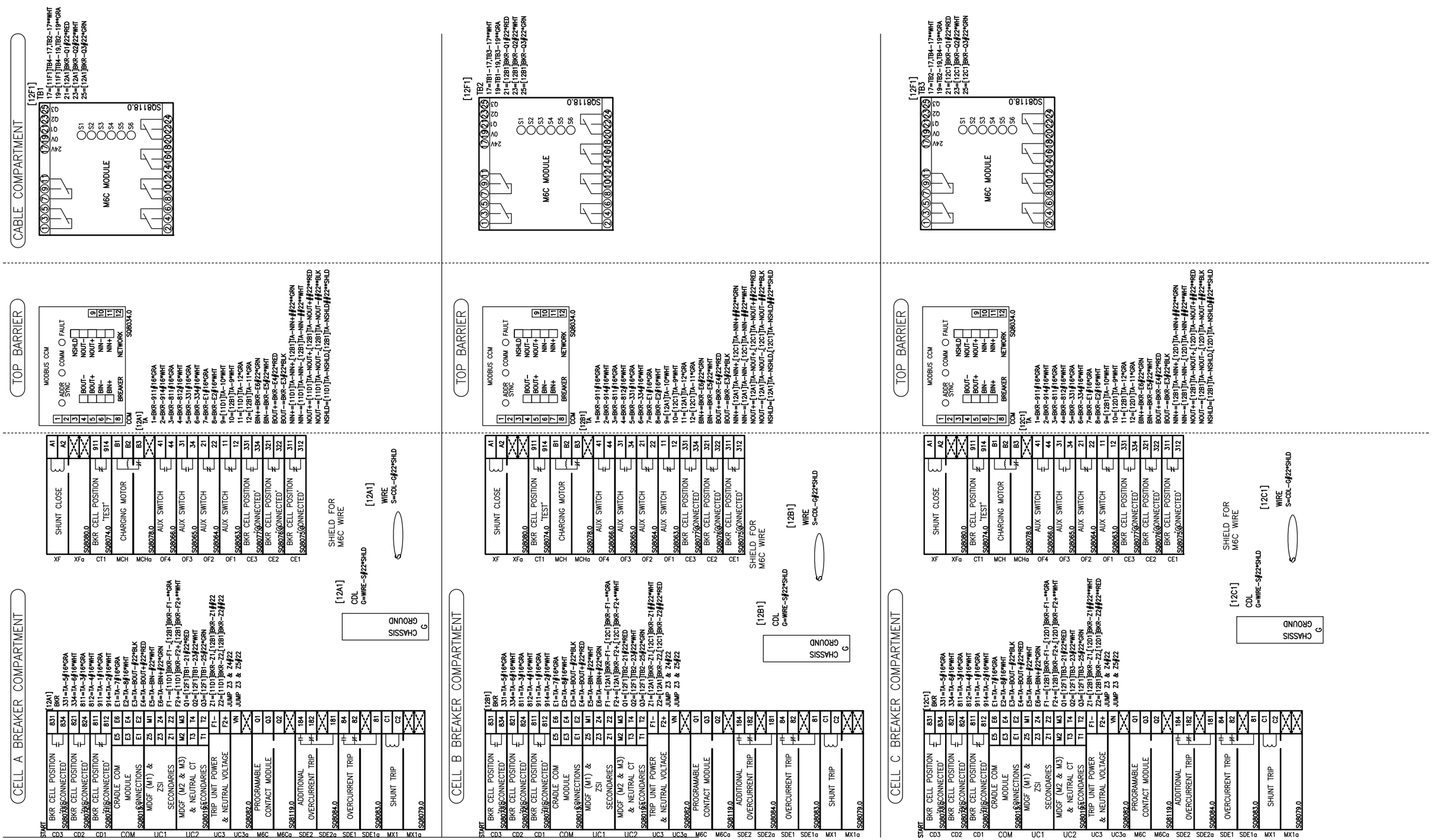

NOTES

1. ALL #22 AWG WIRE WITH A COLOR DESIGNATION (RED, BLK, WHT, GRN) IS 8723 4-CONDUCTOR BELDEN CABLE.
2. ALL WIRE DESIGNATIONS INCLUDING A COLOR (GRA, WHT) PLUS A ONE OR TWO DIGIT NUMBER INDICATE A TWISTED PAIR. FOR EXAMPLE, GRA70 AND WHT70 MAKE UP A SINGLE TWISTED PAIR WIRE.
3. ROUTE ALL BELDEN CABLE AND TWISTED PAIR WIRE IN BOTTOM WIREWAY.

SECTION 12

JOB NAME:	BUILDING #22 RENOVATIONS	EQUIPMENT DESIGNATION:	SEC SWG A & B NEMA 1
JOB LOCATION:	ALBANY, NY	EQUIPMENT TYPE:	PZ4 SWITCHGEAR
DRAWN BY:	J. BROWN	DRAWING TYPE:	WIRING DIAGRAM
ENGR:	JJ		SQUARE D Schneider Electric
DATE:	DECEMBER 04, 2006		
DRAWING STATUS:	RECORD	DWG#	W21295878-007-12 PG 1 OF 2 REV A

REV	DESCRIPTION	BY	DATE									
A	ADD 24V TO M6C	JJ	02/22/07	–	----	--	--/--/--	–	----	--	--/--/--

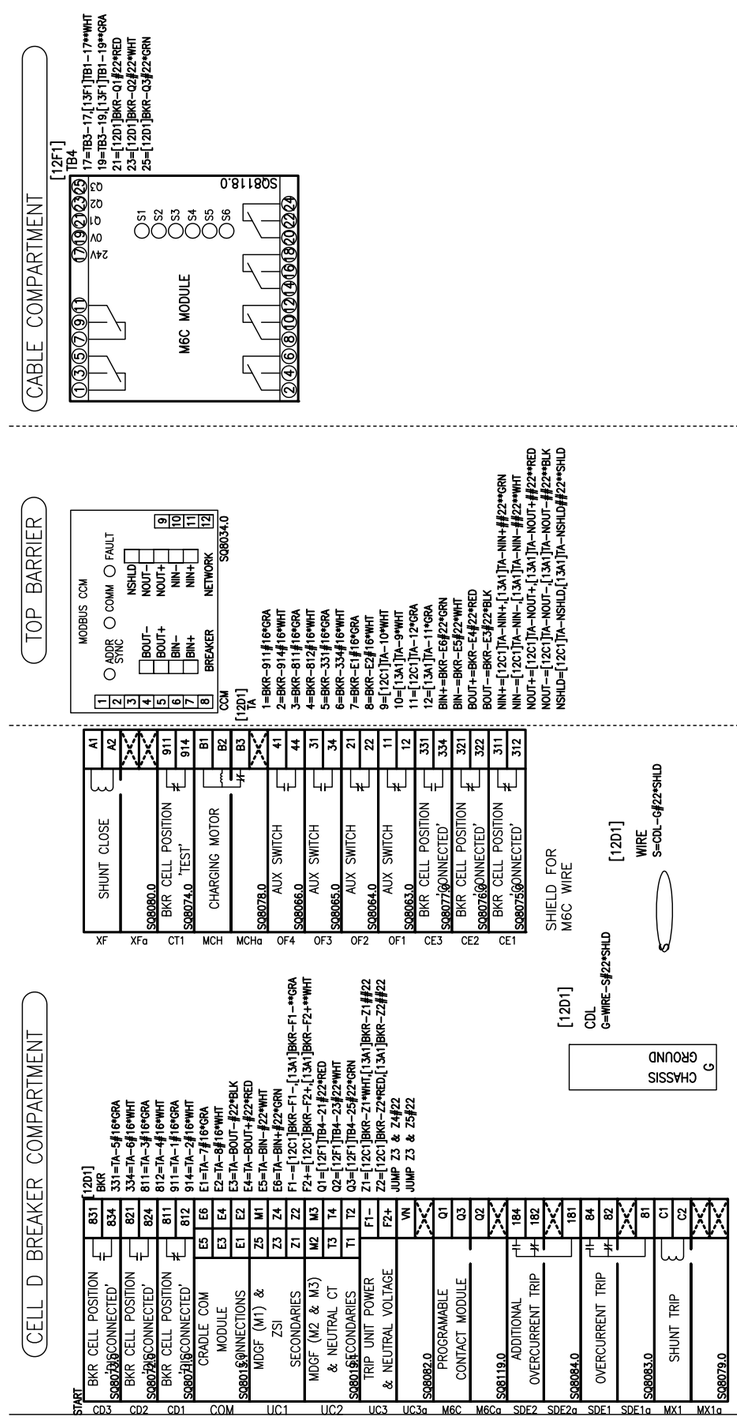

NOTES

1. ALL #22 AWG WIRE WITH A COLOR DESIGNATION (RED, BLK, WHT, GRN) IS 8723 4-CONDUCTOR BELDEN CABLE.
2. ALL WIRE DESIGNATIONS INCLUDING A COLOR (GRA, WHT) PLUS A ONE OR TWO DIGIT NUMBER INDICATE A TWISTED PAIR. FOR EXAMPLE, GRA70 AND WHT70 MAKE UP A SINGLE TWISTED PAIR WIRE.
3. ROUTE ALL BELDEN CABLE AND TWISTED PAIR WIRE IN BOTTOM WIREWAY.

SECTION 12

JOB NAME:	BUILDING #22 RENOVATIONS	EQUIPMENT DESIGNATION:	SEC SWG A & B NEMA 1
JOB LOCATION:	ALBANY, NY	EQUIPMENT TYPE:	PZ4 SWITCHGEAR
DRAWN BY:	J. BROWN	DRAWING TYPE:	WIRING DIAGRAM
ENGR:	JJ		SQUARE D Schneider Electric
DATE:	DECEMBER 04, 2006		
DRAWING STATUS:	RECORD	DWG# W21295878-007-12	PG 2 OF 2 REV A

REV	DESCRIPTION	BY	DATE								
A	ADD 24V TO M6C	JJ	02/22/07	–	----	--	--/--/--	–	----	--	--/--/--
				–	----	--	--/--/--	–	----	--	--/--/--

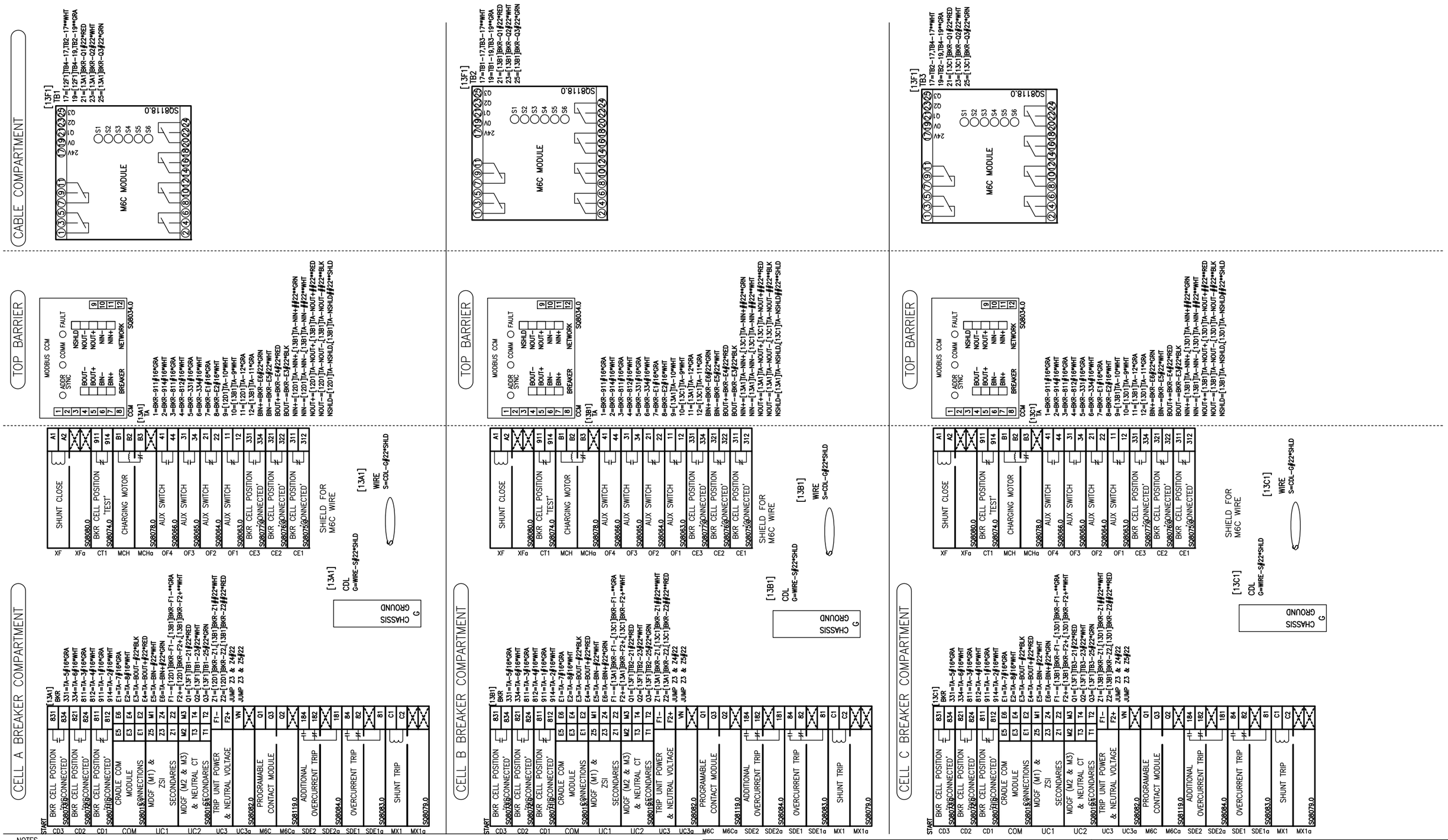

NOTES

1. ALL #22 AWG WIRE WITH A COLOR DESIGNATION (RED, BLK, WHT, GRN) IS 8723 4-CONDUCTOR BELDEN CABLE.
2. ALL WIRE DESIGNATIONS INCLUDING A COLOR (GRA, WHT) PLUS A ONE OR TWO DIGIT NUMBER INDICATE A TWISTED PAIR. FOR EXAMPLE, GRA70 AND WHT70 MAKE UP A SINGLE TWISTED PAIR WIRE.
3. ROUTE ALL BELDEN CABLE AND TWISTED PAIR WIRE IN BOTTOM WIREWAY.

SECTION 13

JOB NAME:	BUILDING #22 RENOVATIONS	EQUIPMENT DESIGNATION:	SEC SWG A & B NEMA 1
JOB LOCATION:	ALBANY, NY	EQUIPMENT TYPE:	PZ4 SWITCHGEAR
DRAWN BY:	J. BROWN	DRAWING TYPE:	WIRING DIAGRAM
ENGR:	JJ		SQUARE D Schneider Electric
DATE:	DECEMBER 04, 2006		
DRAWING STATUS:	RECORD	DWG# W21295878-007-13	PG 1 OF 2 REV A

REV	DESCRIPTION	BY	DATE	–	----	--	--/--/--	–	----	--	--/--/--
A	ADD 24V TO M6C	JJ	02/22/07	–	----	--	--/--/--	–	----	--	--/--/--

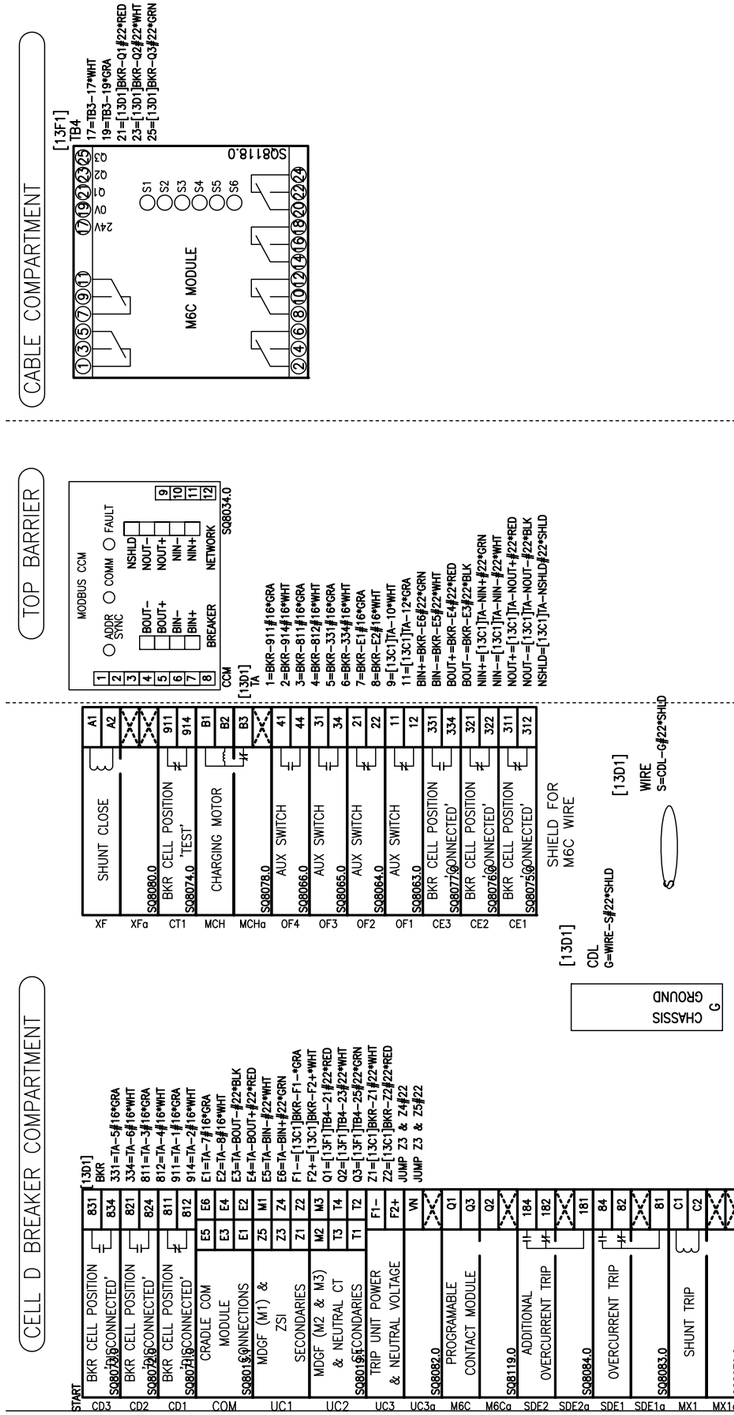

NOTES

1. ALL #22 AWG WIRE WITH A COLOR DESIGNATION (RED, BLK, WHT, GRN) IS 8723 4-CONDUCTOR BELDEN CABLE.
2. ALL WIRE DESIGNATIONS INCLUDING A COLOR (GRA, WHT) PLUS A ONE OR TWO DIGIT NUMBER INDICATE A TWISTED PAIR. FOR EXAMPLE, GRA70 AND WHT70 MAKE UP A SINGLE TWISTED PAIR WIRE.
3. ROUTE ALL BELDEN CABLE AND TWISTED PAIR WIRE IN BOTTOM WIREWAY.

SECTION 13

JOB NAME:	BUILDING #22 RENOVATIONS	EQUIPMENT DESIGNATION:	SEC SWG A & B NEMA 1
JOB LOCATION:	ALBANY, NY	EQUIPMENT TYPE:	PZ4 SWITCHGEAR
DRAWN BY:	J. BROWN	DRAWING TYPE:	WIRING DIAGRAM
ENGR:	JJ		SQUARE D Schneider Electric
DATE:	DECEMBER 04, 2006		
DRAWING STATUS:	RECORD	DWG# W21295878-007-13	PG 2 OF 2 REV A